ABB MEASUREMENT & ANALYTICS | OPERATING INSTRUCTION | OI/TZIDC-EN REV. E

TZIDC

Digital positioner

Digital positioner for positioning the pneumatically controlled final control elements

—
TZIDC

Introduction

The TZIDC is an intelligent digital positioner for communication via HART within the positioner product range.
Unsurpassed shock absorption and vibration compensation from 10 g to 80 Hz distinguishes the TZIDC from other products and guarantees reliable operation in nearly all areas under the harshest ambient conditions.

Additional Information

Additional documentation on TZIDC is available for download free of charge at www.abb.com/positioners.
Alternatively simply scan this code:

Table of contents

1 Safety ... 4
General information and instructions ... 4
Warnings ... 4
Intended use ... 4
Improper use ... 4
Cable glands ... 4
Warranty provisions ... 4
Cyber security disclaimer ... 5
Software downloads ... 5
Manufacturer's address ... 5
Service address ... 5

2 Use in potentially explosive atmospheres ... 6
General requirements ... 6
Approvals and certifications ... 6
Explosion protection approvals ... 6
Standards applied ... 6
Product identification ... 6
Marking (name plate) ... 6
Commissioning, Installation ... 7
Notes for operation ... 7
Use, Operation ... 7
Maintenance, repair ... 8
Preconditions for safe operation of the positioner ... 9
Cable gland ... 9
ATEX / UKEX ... 10
Type of protection Ex i, intrinsic safety ... 10
Type of protection Ex ec – increased safety ... 11
IECEx ... 12
Type of protection Ex i, intrinsic safety ... 12
Type of protection Ex e – increased safety, Ex n – non-sparking ... 13
cFMus ... 14
Ex marking ... 14
Temperature Data ... 14
Electrical Data ... 14
Commissioning, installation ... 14
Special conditions for the safe use of intrinsically safe positioners ... 15
Use, operation ... 15
Maintenance, repair ... 16
Fault elimination ... 16
Warning markings ... 17
FM installation drawing No. 901265 ... 18
EAC TR-CU-012 ... 23

3 Design and function ... 24
Schematic diagram ... 24
Principle of operation ... 24

4 Product identification ... 25
Name plate ... 25

5 Transport and storage ... 26
Inspection ... 26
Transporting the device ... 26
Storing the device ... 26
Ambient conditions ... 26
Returning devices ... 26

6 Installation ... 26
Safety instructions ... 26
External position sensors ... 27
Mechanical mounting ... 28
Measurement and operating range to HW-Rev.: 5.0 ... 28
Measurement and operating range from HW-Rev.: 5.01 with optional contactless position feedback ... 29
Mounting on linear actuators ... 30
Mounting on rotary actuator ... 32

7 Electrical connections ... 34
Safety instructions ... 34
TZIDC / TZIDC Control Unit terminal assignment ... 35
TZIDC Remote Sensor terminal assignment ... 36
Electrical data for inputs and outputs ... 37
Option modules ... 37
Connection on the device ... 38
Conductor cross-section ... 39
Connection on device - TZIDC Control Unit with TZIDC Remote Sensor ... 40
Connection on device - TZIDC Control Unit for remote position sensor ... 41

8 Pneumatic Connections ... 42
Safety instructions ... 42
Information on double acting actuators with spring-return mechanism ... 42
Notes on ABB pressure gauge blocks ... 42
Connection on the device ... 43
Air supply ... 43

9 Commissioning 44
Operating modes 44
Standard automatic adjustment 45
Standard automatic adjustment for linear actuators* 45
Standard automatic adjustment for rotary actuators* 45
Sample parameters 45
Setting the mechanical position indication 46
Setup of the feedback on the actuator position using proximity switches 46
Setup of the feedback on the actuator position using microswitches 47

10 Operation 48
Safety instructions 48
Parameterization of the device 48
Menu navigation 48
Menu levels 49
HART® Parameter Overview 50
Parameter description HART® 51

11 Diagnosis / error messages 54
Error codes 54
Alarm codes 56
Message codes 57

12 Maintenance 58

13 Repair 58
Safety instructions 58
Returning devices 58

14 Recycling and disposal 58

15 Additional documents 58

16 Appendix 59
Return form 59

1 Safety

General information and instructions

These instructions are an important part of the product and must be retained for future reference.
Installation, commissioning, and maintenance of the product may only be performed by trained specialist personnel who have been authorized by the plant operator accordingly. The specialist personnel must have read and understood the manual and must comply with its instructions.
For additional information or if specific problems occur that are not discussed in these instructions, contact the manufacturer.
The content of these instructions is neither part of nor an amendment to any previous or existing agreement, promise or legal relationship.
Modifications and repairs to the product may only be performed if expressly permitted by these instructions.
Information and symbols on the product must be observed. These may not be removed and must be fully legible at all times.
The operating company must strictly observe the applicable national regulations relating to the installation, function testing, repair and maintenance of electrical products.

Warnings

The warnings in these instructions are structured as follows:

⚠ DANGER

The signal word '**DANGER**' indicates an imminent danger. Failure to observe this information will result in death or severe injury.

⚠ WARNING

The signal word '**WARNING**' indicates an imminent danger. Failure to observe this information may result in death or severe injury.

⚠ CAUTION

The signal word '**CAUTION**' indicates an imminent danger. Failure to observe this information may result in minor or moderate injury.

NOTICE

The signal word *'NOTICE'* indicates possible material damage.

Note
'**Note**' indicates useful or important information about the product.

Intended use

Positioning of pneumatically controlled actuators; designed for mounting on linear and rotary actuators.
The device is designed for use exclusively within the stated values on the name plate and in the data sheet.

- The maximum operating temperature must not be exceeded.
- The maximum ambient temperature must not be exceeded.
- The housing's rating must be observed during operation.

Improper use

The following are considered to be instances of especially improper use of the device:

- For use as a climbing aid, for example for mounting purposes.
- For use as a bracket for external loads, for example as a support for piping, etc.
- Material application, for example by painting over the housing, name plate or welding/soldering on parts.
- Material removal, for example by spot drilling the housing.

Cable glands

Cable glands should be selected and implemented by the operator in accordance with their use and application requirements.
The cable glands must comply with the requirements of EN 60079-7, EN 60079-11 or EN 60079-15.
Especially in Ex applications, the requirements of the appropriate type of protection should be observed.

Warranty provisions

Using the device in a manner that does not fall within the scope of its intended use, disregarding this manual, using underqualified personnel, or making unauthorized alterations releases the manufacturer from liability for any resulting damage. This renders the manufacturer's warranty null and void.

Cyber security disclaimer

This product is designed to be connected to and to communicate information and data via a network interface. It is operator's sole responsibility to provide and continuously ensure a secure connection between the product and your network or any other network (as the case may be).
Operator shall establish and maintain any appropriate measures (such as but not limited to the installation of firewalls, application of authentication measures, encryption of data, installation of anti-virus programs, etc.) to protect the product, the network, its system and the interface against any kind of security breaches, unauthorized access, interference, intrusion, leakage and/or theft of data or information.
ABB and its affiliates are not liable for damages and/or losses related to such security breaches, any unauthorized access, interference, intrusion, leakage and/or theft of data or information.

Software downloads

By visiting the web pages indicated below, you will find notifications about newly found software vulnerabilities and options to download the latest software. It is recommended that you visit this web pages regularly:
www.abb.com/cybersecurity

ABB Library – TZIDC – Software downloads

Manufacturer's address

ABB AG
Measurement & Analytics
Schillerstr. 72
32425 Minden
Germany
Tel: +49 571 830-0
Fax: +49 571 830-1806

Service address

Customer service center
Tel: 0180 5 222 580
Email: automation.service@de.abb.com

2 Use in potentially explosive atmospheres

General requirements

- The ABB positioner has been approved only for appropriate and intended use in standard industrial atmospheres. Any breach of this rule leads to a cancellation of warranty and manufacturer's responsibility!
- Make sure that only devices which comply with the types of protection relevant to the applicable zones and categories are installed.
- All electric equipment has to be suited for the respective intended use.

Approvals and certifications

The digital positioner TZIDC has a variety of different explosion protection approvals. The scope of these approvals extends over the entire EU, Switzerland, and special countries.

They range from explosion protection approvals in accordance with ATEX directives to internationally recognized approvals such as IECEx, and additionally include country-specific explosion protection approvals.

Explosion protection approvals

- ATEX / UKEX, for details, see page 10.
- IECEx, for details, see page 12.
- cFMus, for details, see page 14.
- EAC TR-CU-012, for details see page 23.

Standards applied

The standards including the date of issue with the devices are in compliance are specified in the EU Type examination certificate and in the declaration of conformity of the manufacturer.

Product identification

Depending on the type of explosion protection, Ex-marking is attached to the positioner on the right, next to the main name plate.
This indicates the level of explosion protection and the device's relevant Ex certificate.

Marking (name plate)

Figure 1: Ex marking (example, Atex / IECEx)

Figure 2: Ex marking (example, UKEX)

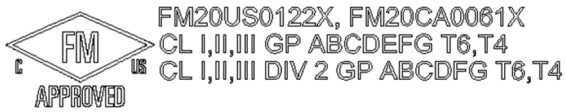

Figure 3: Ex marking (example, cFMus)

Figure 4: Ex marking (example, EAC Ex)

Commissioning, Installation

The ABB positioner has to be mounted in a major system. Depending on the degrees of IP-protection, an interval for cleaning the equipment (dust settlement) has to be defined. Strict care has to be taken that only devices which comply with the types of protection relevant to the applicable zones and categories is installed.
When installing the device, the locally applicable installation regulations, such as EN 60079-14, must be observed.

Other important facts to be observed:

- The electric circuits of the positioner must be put into operation in all zones by persons qualified in accordance with TRBS 1203. The details on the type label are mandatory for doing this.
- The device has been designed in accordance with IP 65 (optionally IP 66) and must be protected accordingly against adverse ambient conditions.
- In accordance with the selected Ex approval, the information in the EU type examination certificate or the Ex certificates must be observed, including the special conditions defined in them.
- The device may only be used in accordance with its intended use.
- The device may only be connected when de-energized.
- The potential equalization of the system must be established in accordance with installation regulations applicable in the respective country (VDE 0100, Part 540, IEC 364-5-54).
- Circulating currents must not be guided through the housing!
- Make sure that the housing is properly installed and that its IP rating has not been compromised.
- In potentially explosive atmospheres, assembly may be conducted only in compliance with locally applicable installation regulations. The following conditions have to be observed (incomplete):
  - Assembly and maintenance may only be conducted if there is no explosion hazard in the area and you have a hot work permit.
  - The TZIDC may be operated in a fully mounted and intact housing only.

Notes for operation

- The positioner must be integrated in the local potential equalization system.
- Only either intrinsically safe or non intrinsically safe circuits may be connected. A combination is not permit - ted.
- If the positioner is operated with non intrinsically safe circuits, later use for the intrinsic safety type of protection is not permitted.

Use, Operation

The TZIDC is approved for proper and intended use only. In case of non-compliance, the warranty and manufacturer’s liability do no longer apply!

- Only those auxiliary components which fulfill all the requirements of European and national standards may be used in potentially explosive atmospheres.
- The ambient conditions specified in the operating instruction must be strictly followed.
- The TZIDC is approved for proper and intended use in standard industrial atmospheres only. Where aggressive substances are present in the air, the manufacturer has to be consulted.

… 2 Use in potentially explosive atmospheres

Maintenance, repair

Definition of terms according to IEC 60079-17:

Maintenance

Defines a combination of actions performed to maintain or restore the condition of an item such that the item meets the requirements of the relevant specification and performs its required functions.

I ¬Analyzer module without electronics module (power supply):

Defines an action which involves careful inspection of an item (either without disassembly or with partial disassembly, as required) supplemented by measurements, aimed at achieving a reliable conclusion regarding the condition of the item.

Visual inspection

Defines an inspection which identifies defects which are visible to the naked eye, such as missing screws, without the use of access equipment and tools.

Close inspection

Defines an inspection which encompasses the aspects covered by a visual inspection and in addition, identifies defects such as loose screws, which can only be detected with the use of access equipment (e.g. steps) and tools.

Detailed inspection

Defines an inspection which encompasses the aspects covered by a close inspection and in addition, identifies defects, such as loose connections, which can only be detected by opening the housing and / or by using tools and test devices, as needed.

- Maintenance and exchange work may be conducted by qualified specialists only, i.e., qualified personnel in accordance with TRBS 1203 or similar.
- Only those auxiliary components which fulfill all the requirements of European and national guidelines and regulations may be used in potentially explosive atmospheres.
- Maintenance works that require disassembly of the system may only be performed in non-hazardous areas. If that is not possible, however, the usual precautions have to be ensured according to local regulations.
- Components may only be replaced by original spare parts which are therefore approved for use in potentially explosive atmospheres.
- The device must be regularly cleaned when used in potentially explosive atmospheres. The intervals must be defined by the operator in compliance with the ambient conditions present at the operating location.
- After all maintenance and repair work has been completed, any barriers and plates removed for that purpose must be put back in their original place.
- The flameproof joints differ from the tables of IEC 60079-1 and may be repaired by the manufacturer only.

Activity	Visual inspection (every 3 months)	Close inspection (every 6 months)	Detailed inspection (every 12 months)
Visual inspection of the positioner for integrity, removal of dust deposits	●		
Inspection of electric installation for integrity and proper operation			●
Inspection of the entire installation		Responsibility of the operator	

Preconditions for safe operation of the positioner

When using in hazardous areas, observe the following points:

- Observe the specification and special conditions applicable for the device in accordance with the relevant valid certificate.
- Manipulation of the device in any form by the user is not permitted. Only the manufacturer or an explosion protection specialist may modify the device
- The IP 65 / NEMA 4x IP rating is only achieved if the splash guard is screwed in place. Operating the unit without splash guard cap is prohibited.
- The device may only be operated using instrument air that is free from oil, water and dust. The use of flammable gas, oxygen, or oxygen-enriched gas is not permitted.

- High / recurring charging processes in gas zones must be excluded by the operator.

Cable gland

Limited temperature range of the M20 × 1.5 plastic cable gland for explosion protection variants:

- The permissible ambient temperature range is −20 to 80 °C (−4 to 176 °F).
- When using the cable gland, you need to make sure that the ambient temperature is within the permissible range plus 10 K or that they are suited in terms of the minimal ambient temperature.
- The cable gland must be installed in the housing with a tightening torque of 3.8 Nm. When installing the connection of the cable gland and cable, check for tightness to ensure that the required IP rating is met.

… 2 Use in potentially explosive atmospheres

ATEX / UKEX

Type of protection Ex i, intrinsic safety

Ex-marking

Ex marking	
Marking	II 2 G Ex ia IIC T6/ T4…T1 Gb II 2 G Ex ib IIC T6/ T4 …T1 Gb II 3 G Ex ic IIC T6/T4 … T1 Gc
Type Examination Test Certificate	TÜV 04 ATEX 2702 X
Certificate (UKEX)	EMA22UKEX0032X
Type of protection	Intrinsic safety ‘i’
Device class	II 2G / II 3G
Standards	EN 60079-0, EN 60079-11

Special conditions

- The power supply for the ‘Feedback on the actuator position using proximity switches (Pepperl & Fuchs SJ2-SN)’ circuit must be provided intrinsically safe in accordance with the PTB 00 ATEX 2049 X certificate according to application type 2.
- It is only permissible to connect, disconnect, and switch live circuits during installation or maintenance, or for the purpose of carrying out repairs.
  Note
  It is considered very unlikely that a potentially hazardous atmosphere would be present in Zone 2 at the same time that installation or maintenance or repair work was being carried out.
- Only non-flammable gases must be used for pneumatic power supply.
- When used with gases from group IIA and a temperature class of T1 for pneumatic power supply, the positioner TZIDC may only be used outdoors or inside sufficiently ventilated buildings.
- For TZIDC, the gas supplied must be kept sufficiently free of air and oxygen to prevent an ignitable atmosphere from forming. The exhaust gas must always be discharged outside.
- Only use suited cable entries that meet the requirements of EN 60079-11.

Temperature Data

Device group II 2 G / II 3 G	
Temperature class	**Ambient temperature Ta**
T4 to T1	−40 to +85 °C
T6*	−40 to 40 °C*

* When using the ‘Plug-in module for digital feedback’ in temperature class T6, the maximum permissible ambient temperature range is −40 to +35 °C.

Electrical Data

In type of protection ‘Intrinsic safety Ex ib, Ex ia or Ex ic’, only for connection to a certified intrinsically safe circuit.

Current circuit (terminal)	**Electrical information (maximum values)**	
Signal circuit (+11 / -12)	U_i = 30 V I_i = 320 mA P_i = 1.1 W	C_i = 6.6 nF L_i = negligibly small
Contact input (+81 / -82)	U_i = 30 V I_i = 320 mA P_i = 1.1 W	C_i = 14.5 nF L_i = negligibly small
Switch output (+83 / -84)	U_i = 30 V I_i = 320 mA P_i = 500 mW	C_i = 14.5 nF L_i = negligibly small
Feedback on the actuator position using proximity switches, (Pepperl & Fuchs SJ2-SN) (Limit1: +51 / −52), (Limit2: +41 / -42)	For maximum values, see EU-Type examination certificate PTB 00 ATEX 2049 X Pepperl & Fuchs Type 2 proximity switches	
Plug-in module for digital feedback (+51 / -52) (+41 / -42)	U_i = 30 V I_i = 320 mA P_i = 250 mW	C_i = 3.7 nF L_i = negligibly small
Plug-in module for analog feedback (+31 / -32)	U_i = 30 V I_i = 320 mA P_i = 1.1 W	C_i = 6.6 nF L_i = negligibly small
Interface with the TZIDC Remote Sensor (X2-2: +Uref, X3-2: GND, X3-1: Signal)	U_0 = 5.4 V I_0 = 74 mA P_0 = 100 mW C_i = negligibly small L_i = negligibly small	Ex ia or Ex ib type of protection IIC: L_0 = 5 mH C_0 = 2 µF IIB: L_0 = 5 mH C_0 = 10 µF
Local communication interface (LCI)	Only for connection to a programming device using an ABB LCI adapter (Um ≤ 30 V DC) outside the hazardous area.	

Type of protection Ex ec – increased safety

Ex marking

Ex marking	
Marking	II 3 G Ex ec IIC T6, T4…T1 Gc
Type Examination Test Certificate	TÜV 04 ATEX 2702 X
Certificate (UKEX)	EMA22UKEX0032X
Type	Equipment for increased safety
Device class	II 3 G
Standards	EN 60079-0, EN 60079-7

Special conditions

- For the 'Feedback on the actuator position using proximity switches (Pepperl & Fuchs SJ2-SN)' circuit, measures outside of the device must be implemented to prevent an up-scale of the rated voltage by more than 40% in the event of transient disturbances.
- It is only permissible to connect, disconnect, and switch live circuits during installation or maintenance, or for the purpose of carrying out repairs.
  Note
  It is considered very unlikely that a potentially hazardous atmosphere would be present in Zone 2 at the same time that installation or maintenance or repair work was being carried out.
- Only non-flammable gases must be used for pneumatic power supply.
- Only use suited cable entries that meet the requirements of EN 60079-7.

In the case of TZIDC, the following shall apply for safe use in the Ex 'ec IIC' type of protection:

- Only devices that are suited for operation in hazardous areas of Zone 2 and the conditions prevailing at the place of use may be connected to circuits in Zone 2 (manufacturer's declaration or certificate from the test center).

Temperature Data

Device group II 3 G	
Temperature class	**Ambient temperature Ta**
T4 to T1	−35 to +85 °C
T6*	−35 to +50 °C*

* When using the 'Plug-in module for digital feedback' in temperature class T6, the maximum permissible ambient temperature range is −35 to +35 °C.

Electrical Data

In 'Increased safety Ex ec' type of protection only for connection to a certified circuit for increased safety.

Current circuit (terminal)	**Electrical information (maximum values)**
Signal circuit (+11 / -12)	U = 9.7 V DC I = 4 to 20 mA, max. 21.5 mA
Contact input (+81 / -82)	U = 12 to 24 V DC I = 4 mA
Switch output (+83 / -84)	U = 11 V DC
Feedback on the actuator position using proximity switches, (Pepperl & Fuchs SJ2-SN) (Limit1: +51 / −52), (Limit2: +41 / -42)	U= 8,2 V (Ri approx. 1 kΩ)
Plug-in module for digital feedback (+51 / -52) (+41 / -42)	U = 5 to 11 V DC
Plug-in module for analog feedback (+31 / -32)	U = 10 to 30 V DC I = 4 to 20 mA, max. 21.5 mA
Local communication interface (LCI)	Only for connection to a programming device using an ABB LCI adapter (Um ≤ 30 V DC) outside the hazardous area.

… 2 Use in potentially explosive atmospheres

IECEx

Type of protection Ex i, intrinsic safety

Ex marking

Ex marking	
Marking	Ex ia IIC T6 resp. T4...T1 Gb Ex ib IIC T6 resp. T4...T1 Gb Ex ic IIC T6 resp. T4...T1 Gc
Type Examination Test Certificate	IECEx TUN 04.0015X
Type	Intrinsic safety 'i'
Standards	IEC 60079-0, IEC 60079-11

Special conditions

- The power supply for the 'Feedback on the actuator position using proximity switches (Pepperl & Fuchs SJ2-SN)' circuit must be provided intrinsically safe in accordance with the PTB 00 ATEX 2049 X certificate according to application type 2.
- It is only permissible to connect, disconnect, and switch live circuits during installation or maintenance, or for the purpose of carrying out repairs.
  Note
  It is considered very unlikely that a potentially hazardous atmosphere would be present in Zone 2 at the same time that installation or maintenance or repair work was being carried out.
- Only non-flammable gases must be used for pneumatic power supply.
- When used with gases from group IIA and a temperature class of T1 for pneumatic power supply, the positioner TZIDC may only be used outdoors or inside sufficiently ventilated buildings.
- For TZIDC, the gas supplied must be kept sufficiently free of air and oxygen to prevent an ignitable atmosphere from forming. The exhaust gas must always be discharged outside.
- Only use suited cable entries that meet the requirements of EN 60079-11.

Temperature Data

Temperature class	Ambient temperature Ta
T4 to T1	−40 to +85 °C
T6*	−40 to 40 °C*

* When using the 'Plug-in module for digital feedback' in temperature class T6, the maximum permissible ambient temperature range is -40 to +35 °C.

Electrical Data

In type of protection 'Intrinsic safety Ex ib, Ex ia or Ex ic', only for connection to a certified intrinsically safe circuit.

Current circuit (terminal)	Electrical information (maximum values)	
Signal circuit (+11 / -12)	U_i = 30 V I_i = 320 mA P_i = 1.1 W	C_i = 6.6 nF L_i = negligibly small
Contact input (+81 / -82)	U_i = 30 V I_i = 320 mA P_i = 1.1 W	C_i = 14.5 nF L_i = negligibly small
Switch output (+83 / -84)	U_i = 30 V I_i = 320 mA P_i = 500 mW	C_i = 14.5 nF L_i = negligibly small
Local communication interface (LCI)	Only for connection to a programming device using an ABB LCI adapter (Um ≤ 30 V DC) outside the hazardous area.	

The following modules may be operated as an option:

Current circuit (terminal)	Electrical information (maximum values)	
Feedback on the actuator position using proximity switches, (Pepperl & Fuchs SJ2-SN) (Limit1: +51 / −52), (Limit2: +41 / -42)	For maximum values, see certificate IECEx PTB 11.0092X Pepperl & Fuchs Type 2 proximity switches	
Plug-in module for digital feedback (+51 / -52) (+41 / -42)	U_i = 30 V I_i = 320 mA P_i = 250 mW	Ci = 3.7 nF Li = negligibly small
Plug-in module for analog feedback (+31 / -32)	U_i = 30 V I_i = 320 mA P_i = 1.1 W	Ci = 6.6 nF Li = negligibly small

Type of protection Ex e – increased safety, Ex n – non-sparking

Ex marking

IECEx Ex ec	
Marking	Ex ec IIC T6 resp. T4...T1 Gc
Type Examination Test Certificate	IECEx TUN 04.0015X
Type	Increased safety
Standards	IEC 60079-0, IEC 60079-7

IECEx Ex nA	
Marking	Ex nA IIC T6 resp. T4...T1 Gc
Type Examination Test Certificate	IECEx TUN 04.0015X
Type	IP rating 'n'
Standards	IEC 60079-0, IEC 60079-15

Temperature Data

Temperature class	**Ambient temperature Ta**
T4 to T1	−35 to +85 °C
T6*	−35 to +50 °C*

* When using the 'Plug-in module for digital feedback' in temperature class T6, the maximum permissible ambient temperature range is −35 to +35 °C.

Special conditions

- For the 'Feedback on the actuator position using proximity switches (Pepperl & Fuchs SJ2-SN)' circuit, measures outside of the device must be implemented to prevent an up-scale of the rated voltage by more than 40% in the event of transient disturbances.
- Only devices that are suited for operation in hazardous areas of Zone 2 and the conditions prevailing at the place of use may be connected to circuits in Zone 2 (manufacturer's declaration or certificate from the test center).
- It is only permissible to connect, disconnect, and switch live circuits during installation or maintenance, or for the purpose of carrying out repairs.
  Note
  It is considered very unlikely that a potentially hazardous atmosphere would be present in Zone 2 at the same time that installation or maintenance or repair work was being carried out.
- Only non-flammable gases must be used for pneumatic power supply.
- Only use suited cable entries that meet the requirements of EN 60079-7 or EN 60079-15.

Electrical Data

In the 'Increased safety Ex ec or non-sparking Ex nA' type of protection only for connection to a certified intrinsically safe circuit.

Current circuit (terminal)	**Electrical information (maximum values)**
Signal circuit (+11 / -12)	U = 9.7 V DC I = 4 to 20 mA, max. 21.5 mA
Contact input (+81 / -82)	U = 12 to 24 V DC I = 4 mA
Switch output (+83 / -84)	U = 11 V DC
Local communication interface (LCI)	Only for connection to a programming device using an ABB LCI adapter (Um ≤ 30 V DC) outside the hazardous area.

The following modules may be operated as an option:

Current circuit (terminal)	**Electrical information (maximum values)**
Feedback on the actuator position using proximity switches, (Pepperl & Fuchs SJ2-SN) (Limit1: +51 / −52), (Limit2: +41 / -42)	U = 8.2 V (Ri approx. 1 kΩ)
Plug-in module for digital feedback (+51 / -52) (+41 / -42)	U = 5 to 11 V DC
Plug-in module for analog feedback (+31 / -32)	U = 10 to 30 V DC I = 4 to 20 mA, max. 21.5 mA

... 2 Use in potentially explosive atmospheres

cFMus

Ex marking

TZIDC without mechanical position indication	
Model number: V18345-10b2c2de0f or V18345-30b2c2de0f	
IS / I, II, III / 1 / ABCDEFG / T6, T4 Ta = 40°C, 85°C - 901265; Entity	
NI / I, II, III / 2 / ABCDEFG / T6, T4 Ta = 40°C, 85°C	
Type 4X; IP65	
Max Entity Parameters: Per Control Drawings	
Certificate	FM20US0122X und FM20CA0061X

TZIDC with mechanical position indication	
Model number: V18345-20b2c2de0f or V18345-40b2c2de0f	
IS / I / 1 / ABCD / T6, T4 Ta = 40°C, 85°C - 901265; Entity	
IP65	
Max Entity Parameters: Per Control Drawings	
Certificate	FM20US0122X und FM20CA0061X

Model number details

b Set input / communication port: 1 or 2.
c Set output / safety position: 1, 2, 4 or 5.
d Optional upgrade with plug-in module for analog / digital feedback (option): 0, 1, 3 or 5.
e Optional upgrade with mechanical digital feedback (option): 0, 1 or 2.
f Design (painting / marking): 1, H, P, S or 2

Temperature Data

Temperature class	Ambient temperature Ta
T4 T125 °C	−40 °C < Ta < 85 °C
T6 T85 °C	−40 °C < Ta < 40 °C

Electrical Data

Refer to **FM installation drawing No. 901265** on page 18.

Commissioning, installation

The ABB positioner has to be mounted in a major system. Depending on the degrees of IP-protection, an interval for cleaning the equipment (dust settlement) has to be defined. Strict care has to be taken that only such equipment is installed that complies with the types of protection relevant to the applicable zones and categories.
When installing the equipment, the locally applicable rules on erection, have to be observed, see **Page 4 of 5** on page 21 to **Page 5 of 5** on page 22.

Other important facts to be observed:

- The equipment is constructed for IP 66 and has to be protected accordingly in adverse ambient conditions.
- The Certificates have to be taken into account including any special conditions defined therein.
- The equipment shall only be used as intended.
- The equipment is only to be connected when de-energized.
- The potential equalization of the system has to be established according to the regulations of erection applicable in the respective country of use, see **Page 4 of 5** on page 21 to **Page 5 of 5** on page 22. For installation according to the North American Zone concept the external grounding is supplementary.
- Circulating currents shall not be led via the enclosures!
- It has to be ensured that the enclosure is properly installed and that its IP protection is not impaired.
- Inside the potentially explosive atmospheres' assembly shall only be performed taking the locally applicable rules of erection into account.

The following conditions have to be observed (incomplete):

- Assembly and maintenance to be done only if atmosphere is Ex-free and a permit for hot works is in place.
- The TZIDC is only to be operated in a fully mounted and intact enclosure.
- Outside of the housing is a connector for the equipotential bonding.
  The following opportunities are available:
  - Direct connection of single-strand wires of up to 2.5 mm^2 or
  - Direct connection of fine wires of up to 1.5 mm^2 or
  - Connection of cross-sections of up to 6 mm^2 using a ring or spade terminal with 4 mm drill hole.
- For proper selection of cables see electrical installation instructions in the original manufacturer's manual. Use cables rated at least 20 K greater than the ambient temperature.
- High / recurring charging processes in gas areas must be excluded by the operator.

Notes for operation

- The positioner shall be included in the local equipotential bonding system
- Either only intrinsically or non intrinsically safe circuits shall be connected. A combination is not permitted.
- When the Positioner is operated with non intrinsically safe circuits, the subsequent use for type of protection Intrinsic Safety is not permitted.

Special conditions for the safe use of intrinsically safe positioners

Special conditions

- The 'Local communication interface (LCI)' may only be used outside of the explosion hazardous area with $U_m \leq 30$ V DC.
- Measures of lightning protection have to be provided by the user.

Special conditions for safe use of Positioners non I.S.

- Only devices which are suitable for the operation in explosion hazardous areas declared as zone 2 and the conditions available at the place of operation are allowed to be connected to circuits in the zone 2.
- The connecting and disconnecting as well as the switching of circuits under voltage are only permitted during installation, for maintenance or repair purposes.

Note

The temporal coincidence of explosion hazardous atmosphere and installation, maintenance resp. repair purposes is assessed as improbably.

- For the circuit 'Position feedback with proximity switches or microswitches' measures have to be taken outside the device that the rated voltage is exceeded not more than 40 % by transient disturbances.
- Only non combustible gases are allowed to be used as pneumatic auxiliary energy.
- Only suitable cable entries which meet the requirements of IEC 60079-15 are allowed to be used.

Use, operation

The TZIDC is only approved for intended and appropriate use. In case of non-compliance, the warranty and manufacturer's liability do no longer apply!

- In explosive atmospheres only such auxiliary components shall be used that meet all requirements of the European and the national standards.
- The ambient conditions specified in the instruction manual have to be adhered to strictly.
- The TZIDC has only been approved for its appropriate and intended use in standard industrial atmospheres. Where aggressive substances are present in the air, the manufacturer has to be consulted.

... 2 Use in potentially explosive atmospheres

... cFMus

Maintenance, repair

Maintenance: defines a combination of any actions carried out to retain an item in, or restore it to, conditions in which it is able to meet the requirements of the relevant specification and perform its required functions.

Inspection:
defines any action comprising careful scrutiny of an item carried out either without dismantling, or with the addition of partial dismantling as required, supplemented by means such as measurement, in order to arrive at reliable conclusion as to the condition of an item.

Visual inspection:
defines an inspection which identifies, without the use of access equipment and tools, those defects, such as missing bolts, which will be apparent to the eye.

Close inspection:
defines an inspection which encompasses those aspects covered by a visual inspection and, in addition, identifies those defects, such as loose bolts, which will be apparent only be the use of access equipment, for example steps, where necessary, and tools.

Detailed inspection:
defines an inspection which encompasses those aspects covered by a close inspection and, in addition, identifies those defects, such as loose terminations, which will only be apparent by opening the enclosure, and/or using, where necessary, tools and test equipment.

- Maintenance or replacement works are to be carried out by qualified personnel only, i.e. personnel qualified according to TRBS 1203 or similar.
- Only such auxiliary components may be used in explosive atmospheres which meet all requirements of European and national directives and legislation.
- Maintenance works that require a dismantling of the system shall only be performed if the atmosphere is Ex-free. If that is not possible, however, the usual precautions have to be ensured according to local regulations.
- Components shall only be replaced by original spare parts which are therefore approved for the use in ex- plosive atmospheres.
- Inside the Ex-atmosphere the equipment has to be cleaned regularly. The intervals are to be defined by the user in compliance with the environmental conditions present at the place of operation.
- After maintenance and repair works have been performed, all barriers and notes removed for that purpose have to be put back in their original place.
- The flameproof joints differ from the tables of IEC 60079-1 and should only be repaired by the manufacturer.

Activity

Activity	Visual inspection every 3 months	Close inspection every 6 months	Detailed inspection every 12 months
Visual inspection of positioner for intactness, removal of dust settlements	●		
Check of electrical system for intactness and functionality			●
Check of entire system		User's responsibility	

Fault elimination

No changes or modifications may be performed on equipment that is operated in conjunction with explosive atmospheres. Such equipment shall only be repaired by expert personnel trained and authorized to do so.

Warning markings

- ‘‘TO PREVENT IGNITION OF FLAMMABLE GASES OR VAPORS, DO NOT REMOVE COVER WHILE CIRCUITS ARE LIVE’’
  “POUR ÉVITER L'INFLAMMATION DE GAZ OU DE VAPEURS INFLAMMABLES, NE PAS RETIRER LE COUVERCLE LORSQUE LES CIRCUITS SONT SOUS TENSION.”
- “FOR PROPER SELECTION OF CABLES SEE ELECTRICAL INSTALLATION INSTRUCTIONS IN THE MANUAL”
  “POUR LA SÉLECTION APPROPRIÉE DES CÂBLES, VOIR LES INSTRUCTIONS D'INSTALLATION ÉLECTRIQUE DANS LE MANUEL”

If the equipment was tested according to the exception of table 5 from FM class 3615, the label shall contain the statement:

- ‘‘SEAL ALL CONDUITS WITHIN 18 INCHES’’
  “SCELLER TOUS LES CONDUITS À MOINS DE 18 POUCES”

Equipment supplied with a factory-installed conduit seal shall be marked with the words:

- ‘‘FACTORY SEALED, CONDUIT SEAL NOT REQUIRED’’
  “SCELLÉ EN USINE, JOINT DE CONDUIT NON REQUIS”

... 2 Use in potentially explosive atmospheres

... cFMus

FM installation drawing No. 901265

Page 1 of 5

FM-CONTROL-DOCUMENT_901265

1. Entity concept / Ex ec (TZIDC, TZIDC-110/-120)								
	Concept	Groups	Vmax (V)	Imax (mA)	Pmax (W)	Ci (nF)	Li (µH)	Comment
Terminals +11, -12	Entity	IIC / ABCD	30	320	1.1	6.6	-	Analog Input
	FISCO	IIC / ABCD	17.5	183	-			Input
	FISCO	IIB / CD	17.5	380	-			Input
Terminals +31, -32	Entity	IIC / ABCD	30	320	1.1	6.6	-	Analog Position Feedback
Terminals +41, -42; +51, -52	Entity	IIC / ABCD	30	320	0.25	3.7	-	Digital Feedback
Terminals +41, -42; +51, -52	Entity	IIC / ABCD	16	25	0.064	60	100	Limit switches
Terminals +81, -82	Entity	IIC / ABCD	30	320	1.1	14.5	-	Digital Input
Terminals +83, -84	Entity	IIC / ABCD	30	320	0.5	14.5	-	Digital Output

2. Intrinsic safety / Ex I (TZIDC, TZIDC-110/-120)								
	Concept	Groups	Vmax (V)	Imax (mA)	Pmax (W)	Ci (nF)	Li (µH)	Comment
Terminals +11, -12	Intrinsic safe	IIC / IIIC / ABCDEFG	30	320	1.1	6.6	-	Analog Input
	FISCO	IIC / IIIC / ABCDEFG	17.5	183	-			Input
	FISCO	IIB / IIIC / CDEFG	17.5	380	-			Input
Terminals +31, -32	Intrinsic safe	IIC / IIIC / ABCDEFG	30	320	1.1	6.6	-	Analog Position Feedback
Terminals +41, -42; +51, -52	Intrinsic safe	IIC / IIIC / ABCDEFG	30	320	0.25	3.7	-	Digital Position Feedback
Terminals +41, -42; +51, -52	Intrinsic safe	IIC / IIIC / ABCDEFG	16	25	0.064	60	100	Limit switches
Terminals +81, -82	Intrinsic safe	IIC / IIIC / ABCDEFG	30	320	1.1	14.5	-	Digital Input
Terminals +83, -84	Intrinsic safe	IIC / IIIC / ABCDEFG	30	320	0.5	14.5	-	Digital Output

3. Flameproof / Ex d (TZIDC-200/-210/-220)								
	Concept	Groups	Vmax (V)	Imax (mA)	Pmax (W)	Ci (nF)	Li (µH)	Comment
Terminals +11, -12	Flameproof	IIC / ABCDEFG	30					Analog Input
	FISCO	IIC / ABCDEFG	17.5	183				Input
	FISCO	IIB / CDEFG	17.5	380				Input
Terminals -31, -32	Flameproof	IIC / ABCDEFG	30					Analog Position Feedback
Terminals +51, -52; +41, -42	Flameproof	IIC / ABCDEFG	30					Digital Position Feedback
Terminals +51, -52; +41, -42	Flameproof	IIC / ABCDEFG	30					Mechanical Digital Feed-back
Terminals +41, -42; +51, -52	Flameproof	IIC / ABCDEFG	16					Limit switches

Ambient temperature **TZIDC-200/-210/-220** Temperature class T5 = -40°C to 82°C

8		2022-02-19	Pet.	2003	Date	Name	Title	Scale
7	DIP marking removed	2021-06-23	Ste	Name	27.03.03	Thiem.	FM-Control-Document	/
6		2020-04-28	Ste	Appr.				
5		2011-07-08	Thie	Std.			No change without notice to FM	
4		2009-10-07	Lasa.	ABB				
3		2006-06-26	Thie.				Drwg.-No. (Part-No.) 901265	Page -1/5-
2		2006-05-22	Thie.	Automation Products				
1		2006-03-27	Thie.					
Rev.	Change	Date	Name				Supersedes Dwg. :	Part Class:

Page 2 of 5

FM-CONTROL-DOCUMENT_901265

Non-Harzardous Location	HAZARDOUS (CLASSIFIED) LOCATION Class I, II, III Div. I & 2 Group A-G Class I Zone 1, 21 Group IIC or IIB/ IIIC

Any FM/CSA Approved Associated Apparatus

TZIDC-xxx	
+11	Analog Input
-12	Analog Input
+31	Analog Position Feedback / Limit Switches
-32	Analog Position Feedback / Limit Switches
+41	Digital Position Feedback /
-42	Digital Position Feedback
+51	Digital Position Feedback/ Limit Switches
-52	Digital Position Feedback/ Limit Switches
+81	Digital Input
-82	Digital Input
+83	Digital Output
-84	Digital Output

→Any FM/ CSA Approved Terminator (maynot be necessary for Entity Installations)

Ambient temperature dependent on temperature class

Type and Marking	**TZIDC, TZDIC-110/-120**	
Ambient temperature	Gas atmosphere	Dust atmosphere
	Temperature class	Ambient temperature
-40 °C to 85 °C	T4	T 125°C
-40 °C to 40 °C	T6	T 85°C

Rev.	Change	Date	Name				Title	Scale
8		2022-02-19	Pet.	2003	Date	Name	FM-Control-Document	/
7	DIP marking removed	2021-06-23	Ste	Name	27.03.03	Thiem.		
6		2020-04-28	Ste	Appr.				
5		2011-07-08	Thie	Std.			No change without notice to FM	
4		2009-10-07	Lasa.	ABB			Drwg.-No. (Part-No.) 901265	Page -2/5-
3		2006-06-26	Thie.					
2		2006-05-22	Thie.	Automation Products				
1		2006-03-27	Thie.					
Rev.	Change	Date	Name				Supersedes Dwg. :	Part Class:

… 2 Use in potentially explosive atmospheres

… cFMus

Page 3 of 5

FM-CONTROL-DOCUMENT_901265

FISCO rules
The FISCO Concept allows the interconnection of intrinsically safe apparatus to associated apparatus not specifically examined in such combination.
The criterion for such interconnection is that the voltage (Vmax), the current (Imax) and the power (Pi) which intrinsically safe apparatus can receive and remain intrinsically safe, considering faults, must be equal or greater than the voltage (Uo, Voc, Vt), the current (Io, Isc, It,) and the power (Po) which can be provided by the associated apparatus (supply unit).
In addition, the maximum unprotected residual capacitance (Ci) and inductance(Li) of each apparatus (other than the terminators) connected to the Fieldbus must be less than or equal to 5 nF and 10 µH respectively.

In each I.S. Fieldbus segment only one active source, normally the associated apparatus, is allowed to provide the necessary power for the Fieldbus system.
The allowed voltage (Uo, Voc, Vt) of the associated apparatus used to supply the bus must be limited to the range of 14V d.c. to 24V d.c.
All other equipment connected to the bus cable has to be passive, meaning that the apparatus is not allowed to provide energy to the system, except to a leakage current of 50 µA for each con - nected device.
Separately powered equipment needs a galvanic Isolation to insure that the intrinsically safe Fieldbus circuit remains passive.
The cable used to interconnect the devices needs to comply with the following parameters:

Loop resistance	R': 15…150 Ω/km
Inductance per unit length	L': 0.4…1mH/km
Capacitance per unit length	C':80…200 nF / km C' = C' line/line + 0.5C' line/screen, if both lines are floating or C' = C' line/line + C' Line/screen, if the screen is connected to one line
Length of spur cable:	max. 30m
Length of trunk cable:	max. 1km
Length of splice:	max. 1m

Terminators
At each end of the trunk cable an approved line terminator with the following parameters is suitable:

- R = 90…100 Ω
- C = 0…2.2 µF.

System evaluation
The number of passive devices like transmitters, actuators, connected to a single bus segment is not limited due to I.S. Reasons. Furthemore, if the above rules are respected, the inductance and capacitance of the cable need not to be considered and will not impair the intrinsic safety of the installation.

8		2022-02-19	Pet.	2003	Date	Name	Title	Scale
7	DIP marking removed	2021-06-23	Ste	Name	27.03.03	Thiem.	FM-Control-Document	/
6		2020-04-28	Ste	Appr.				
5		2011-07-08	Thie	Std.			No change without notice to FM	
4		2009-10-07	Lasa.	ABB				
3		2006-06-26	Thie.				Drwg.-No. (Part-No.) 901265	Page -3/5-
2		2006-05-22	Thie.					
1		2006-03-27	Thie.	Automation Products				
Rev.	Change	Date	Name				Supersedes Dwg. :	Part Class:

FM-CONTROL-DOCUMENT_901265

Installation Notes

A. Installation notes for all ignition protection methods

1. Control equipment connected to the Associated Apparatus must not use or generate more than 250 Vrms or Vdc.
2. Installation should be in accordance with ANSI/ISA RP12.6 (except chapter 5 for FISCO Installations) "Installation of Intrinsically Safe System for Hazardous (Classified) Locations" and the National Electrical Code® (ANSI/NFPA 70) Sections 504 and 505.
3. Output current must be limited by a resistor such that the output voltage current plot is a straight line drawn between open circuit voltage and short circuit current
4. The operation of the local communication interface (LKS) and of the programming interface (X5) is only allowed outside of the Hazardous explosive area.
5. Tampering and replacement with non-factory components may adversely affect the safe use of the system. Subsituation of components may impair suitability for hazadous locations.
6. For FM Div. 2 use: Do not connect or disconnect unless the power was switched off or the area is known to be non hazardous
7. Preventing electrostatic charging
8. Due to the possibility of impermissible electrostatic charging of the housing occurring, the effects of high-voltage sources on the equipment must be prevented. Electrostatic charging can also occur if the device is wiped with a dry cloth or if large amounts of dust flow around the device in dusty environments.
9. To prevent charging of this type from occurring, the C, device may only be cleaned using a damp cloth.
10. Dust flowing round the device should be prevented by installing a flow restrictor or partition.

B. Installation Notes for I.S.

11. The Intrinsic Safety Entity concept allows the interconnection of FM/CSA Approved Intrinsically safe devices with entity parameters not specifically examined in combination as a system when:
    - U_O or V_{OC} or $V_t \leq V_{max}$, I_O or I_{sc} or $I_t \leq I_{max}$, $P_O \leq P_i$. C_a or $C_o \geq \sum C_i + \sum C_{cable}$.
    - For inductance use either L_a or $L_o \geq \sum L_i + \sum L_{cable}$ or $L_C / R_C \leq (L_a / R_a$ or $L_o / R_o)$ and $L_i / R_i \leq (L_a / R_a$ or $L_o / R_o)$
12. The Intrinsic Safety FISCO concept allows the interconnecting of FM/CSA Approved Intrinsically safe devices with FISCO parameters not specifically examine in combination as a system when: U_O or V_{OC} or $V_t \leq V_{max.}$, I_O or I_{SC} or $I_t \leq I_{max}$, $P_O \leq P_i$.
13. The configuration of associated Apparatus must be Factory Mutual Research /Canadian Standards Association Approved under the associated concept.
14. Associated Apparatus manufacturer's installation drawing must be followed when installing this equipment.
15. Caution: Substitution of components may impair intrinsic safety.
16. To maintain intrinsic safety, wiring associated with each channel must be run in separate cable shields connected to intrinsically safe (associated apparatus) ground.

8		2022-02-19	Pet.	2003	Date	Name	Title	Scale
7	DIP marking removed	2021-06-23	Ste	Name	27.03.03	Thiem.	FM-Control-Document	/
6		2020-04-28	Ste	Appr.				
5		2011-07-08	Thie	Std.			No change without notice to FM	
4		2009-10-07	Lasa.	ABB				
3		2006-06-26	Thie.				Drwg.-No. (Part-No.) 901265	Page -4/5-
2		2006-05-22	Thie.	Automation Products				
1		2006-03-27	Thie.					
Rev.	Change	Date	Name				Supersedes Dwg. :	Part Class:

… 2 Use in potentially explosive atmospheres

… cFMus

Page 5 of 5

FM-CONTROL-DOCUMENT_901265

C. Installation notes for flameproof housing

17. Dust-tight conduit seal must be used when installed in Class II and Class III environments.
18. When connecting conduit to the enclosure use conduit hubs that have the same environmentalrating as the enclosure

D. NONINCENDIVE, CLASS I, DIV. 2, GROUP A, B, C, D, AND FOR CLASS II AND III, DIV. 1&2, GROUP E, F, G HAZARDOUS LOCATION INSTALLATION

1. Install per National Electrical Code (NEC) using threaded metal conduit. Intrinsic safety barrier required. Max. Supply voltage 30 V. For T-code see table.
2. A dust tight seal must be used at the conduit entry when the positioner is used in a Class II & III Location.
3. WARNING: Explosion Hazard – do not disconnect equipment unless power has been switched off or the area is known to be Non-Hazardous.
   WARNING: Substitution of components may impair suitability for hazardous locations.

FM-901265 FM-Control-Document Rev. 8

8		2022-02-19	Pet.	2003	Date	Name	Title	Scale
7	DIP marking removed	2021-06-23	Ste	Name	27.03.03	Thiem.	FM-Control-Document	/
6		2020-04-28	Ste	Appr.				
5		2011-07-08	Thie	Std.			No change without notice to FM	
4		2009-10-07	Lasa.	ABB				
3		2006-06-26	Thie.				Drwg.-No. (Part-No.) 901265	Page -5/5-
2		2006-05-22	Thie.					
1		2006-03-27	Thie.	Automation Products				
Rev.	Change	Date	Name				Supersedes Dwg. :	Part Class:

EAC TR-CU-012

Ex marking

Ex marking	
Marking	1Ex ia IIC T6/T4 Gb X 1Ex ib IIC T6/T4 Gb X
Certificate	EAC TR-CU-012
Type	Intrinsically safe equipment
Standards	EN 60079-0, EN 60079-11

Special conditions

- The power supply for the 'Feedback on the actuator position using proximity switches (Pepperl & Fuchs SJ2-SN)' circuit must be provided intrinsically safe in accordance with the PTB 00 ATEX 2049 X / RU C-DE.AA87.B.00394 certificate according to application type 2.
- It is only permissible to connect, disconnect, and switch live circuits during installation or maintenance, or for the purpose of carrying out repairs.
  Note
  It is considered very unlikely that a potentially hazardous atmosphere would be present in Zone 2 at the same time that installation or maintenance or repair work was being carried out.
- Only non-flammable gases must be used for pneumatic power supply.
- Only use suited cable entries that meet the requirements of EN 60079-11.

Temperature characteristic curves

Intrinsically safe circuit according to ATEX and EAC / TR CU 012/2011

- Equipment Category 1: Use in Zone 0
- Equipment Category 2: Use in Zone 1
- Equipment Category 3: Use in Zone 2

Temperature Data

Temperature class	**Ambient temperature Ta**
T4	−40 to +85 °C
T6*	−40 to 40 °C*

* When using the 'Plug-in module for digital feedback' in temperature class T6, the maximum permissible ambient temperature range is -40 to +35 °C.

Electrical Data

In type of protection 'Intrinsic safety Ex ia, Ex ib', only for connection to a certified intrinsically safe circuit.

Current circuit (terminal)	**Electrical information (maximum values)**	
Signal circuit (+11 / -12)	U_i = 30 V I_i = 320 mA P_i = 1.1 W	C_i = 6.6 nF L_i = negligibly small
Contact input (+81 / -82)	U_i = 30 V I_i = 320 mA P_i = 1.1 W	C_i = 14.5 nF L_i = negligibly small
Switch output (+83 / -84)	U_i = 30 V I_i = 320 mA P_i = 500 mW	C_i = 14.5 nF L_i = negligibly small
Feedback on the actuator position using proximity switches, (Pepperl & Fuchs SJ2-SN) (Limit1: +51 / −52), (Limit2: +41 / -42)	For maximum values, see EU-Type examination certificate PTB 00 ATEX 2049 X / RU C-DE.AA87.B.00394 Pepperl & Fuchs Type 2 proximity switches	
Plug-in module for digital feedback (+51 / -52) (+41 / -42)	U_i = 30 V I_i = 320 mA P_i = 250 mW	C_i = 3.7 nF L_i = negligibly small
Plug-in module for analog feedback (+31 / -32)	U_i = 30 V I_i = 320 mA P_i = 1.1 W	C_i = 6.6 nF L_i = negligibly small
Interface with the TZIDC Remote Sensor (X2-2: +Uref, X3-2: GND, X3-1: Signal)	U_0 = 5.4 V I_0 = 74 mA P_0 = 100 mW C_i = negligibly small L_i = negligibly small	Ex ia or Ex ib type of protection IIC: L_0 = 5 mH C_0 = 2 µF IIB: L_0 = 5 mH C_0 = 10 µF
Local communication interface (LCI)	Only for connection to a programming device using an ABB LCI adapter (Um ≤ 30 V DC) outside the hazardous area.	

3 Design and function

Schematic diagram

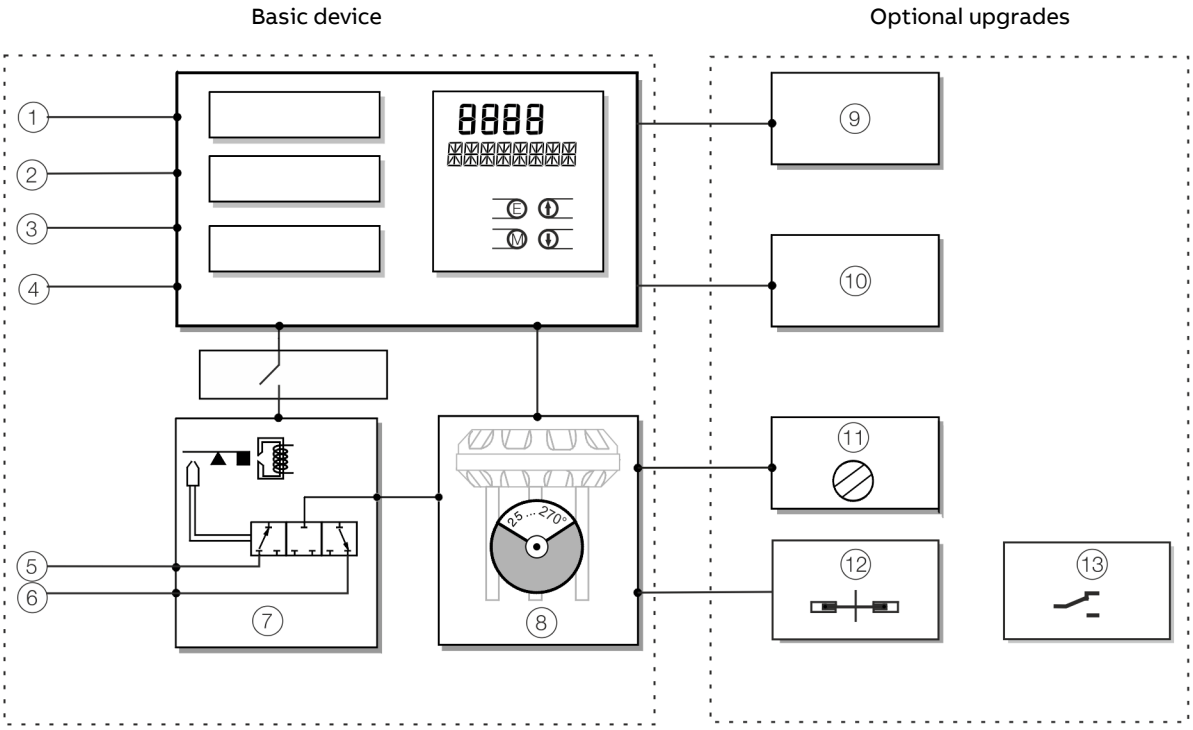

1. LCI plug
2. Setpoint signal 4 to 20 mA
3. Binary input
4. Binary output
5. Supply air: 1.4 to 6 bar (20 to 90 psi)
6. Exhaust
7. I/P module with 3/3-way valve
8. Position sensor
9. Plug-in module for analog feedback (4 to 20 mA)
10. Plug-in module for digital feedback
11. Mechanical position indication
12. Feedback on the actuator position using proximity switches
13. Feedback on the actuator position using microswitches

Figure 5: Schematic diagram of the positioner

Note
With optional extensions, either the ‘Feedback on the actuator position using proximity switches’ (12) or the ‘Feedback on the actuator position using microswitches’ (13) can be used. The mechanical position indication (11) must be installed in both cases.

Principle of operation

The TZIDC is an electronically configurable positioner with communication capabilities designed for mounting on pneumatic linear or rotary actuators.
Fully automatic determination of the control parameters and adaptation to the positioner allow for considerable time savings as well as optimum control behavior.

4 Product identification

Name plate

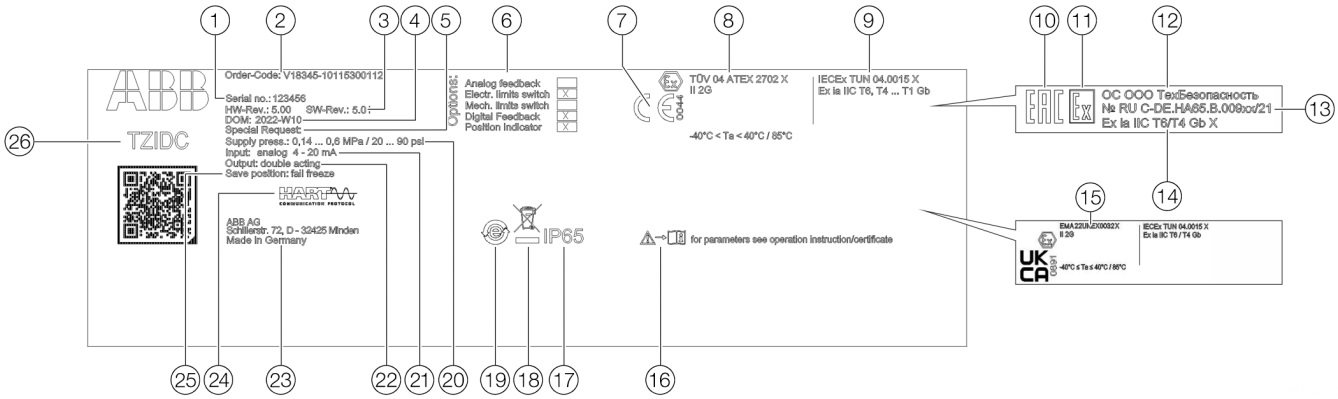

1. Serial number
2. Order code
3. Hardware rev. / software rev.
4. Year of manufacture / calendar week
5. Special request
6. Additional options
7. CE mark
8. Atex marking
9. IECEx marking
10. EAC Symbol (for EAC Ex approval only)
11. Explosion protection marking on GOST 31610.0-2014 (for EAC Ex approval only)
12. Name of the certification center (for EAC Ex approval only)
13. Registration number for compliance certificates (for EAC Ex approval only)
14. IP rating (for EAC Ex approval only)
15. UKCA marks
16. Notice: Observe product documentation
17. IP rating
18. Disposal information
19. China RoHS marking
20. Supply air pressure
21. Input signal
22. Pneumatic system mode of action
23. Manufacturer address
24. Communications protocol
25. Reaction in case of power failure
26. Type designation

Figure 6: Name plate (sample)

5 Transport and storage

Inspection

Check the devices immediately after unpacking for possible damage that may have occurred from improper transport. Details of any damage that has occurred in transit must be recorded on the transport documents.
All claims for damages must be submitted to the shipper without delay and before installation.

Transporting the device

Observe the following instructions:

- Do not expose the device to humidity during transport. Pack the device accordingly.
- Pack the device so that it is protected against vibrations during transport, for example, by using air-cushioned packing.

Storing the device

Bear the following points in mind when storing devices:

- Store the device in its original packaging in a dry and dust-free location. The device is also protected by a desiccant in the packaging.
- The storage temperature should be between −40 to 85 °C (−40 to 185 °F).
- Avoid storing the device in permanent direct sunlight.
- In principle, the devices may be stored for an unlimited period. However, the warranty conditions stipulated in the order confirmation of the supplier apply.

Ambient conditions

The ambient conditions for the transport and storage of the device correspond to the ambient conditions for operation of the device.
Adhere to the device data sheet!

Returning devices

For the return of devices, follow the instructions in **Repair** on page 58.

6 Installation

Safety instructions

⚠ CAUTION

Risk of injury
Risk of injury from pressurized positioner / actuator.

- Before starting work on the positioner / actuator, switch off the air supply and vent the positioner / actuator.

⚠ CAUTION

Risk of injury due to incorrect parameter values!
Incorrect parameter values can cause the valve to move unexpectedly. This can lead to process failures and result in injuries.

- Before recommissioning a positioner that was previously in use at another location, always reset the device to its factory settings.
- Never start automatic adjustment before restoring the factory settings!

Note
Before assembly, check whether the positioner meets the control and safety requirements for the installation location (actuator or final control element).
Refer to the **Specification** in the data sheet.

Only qualified specialists who have been trained for these tasks are authorized to mount and adjust the unit, and to make the electrical connection.
When carrying out any work on the device, always observe the local accident prevention regulations and the regulations concerning the construction of technical installations.

External position sensors

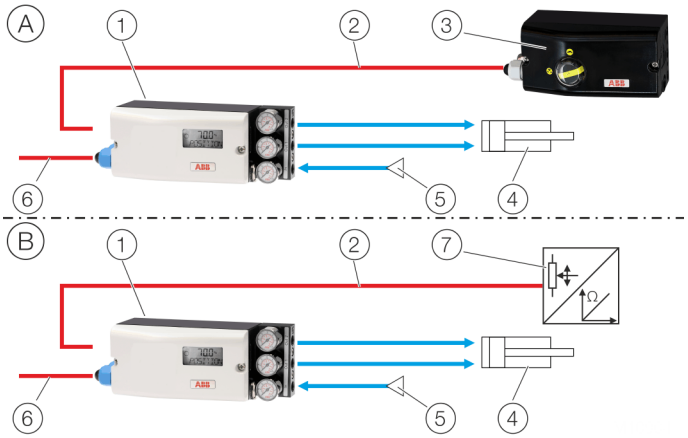

1 TZIDC Control Unit
2 Connection cable
3 TZIDC Remote Sensor
4 Actuator
5 Compressed air supply
6 Set point signal
7 Remote position sensor

Figure 7: TZIDC with external position sensors

Note

If the device is being operated on a cylinder, for reasons associated with linearity you should run automatic adjustment for rotary actuators (refer to **Standard automatic adjustment for rotary actuators** on page 45).

(A) TZIDC Control Unit with TZIDC Remote Sensor*

In this version, the components are supplied in two housings, which together form one harmonized unit.

The following points should be observed during installation:

- Housing 1 (TZIDC Control Unit) contains the electronics and pneumatics and is mounted separately from the actuator.
- Housing 2 (TZIDC Remote Sensor) contains the position sensor and is mounted on the linear and rotary actuator. Perform mechanical mounting as described in **Mechanical mounting** on page 28.
- The electrical connection is performed as described in **Connection on device - TZIDC Control Unit with TZIDC Remote Sensor** on page 40.

Note

To connect the TZIDC Remote Sensor, a cable with the following specifications needs to be used:

- 3-wire, cross-section 0.5 to 1.0 mm^2
- shielded, with at least 85 % coverage
- Temperature range up to at least 100 °C (212 °F)

The cable glands must also be approved for a temperature range up to at least 100 °C (212 °F). The cable glands require a mounting for the shielding and strain relief for the cable in addition.

* The TZIDC Remote Version is temporarily not available for the marine version.

(B) TZIDC Control Unit for remote position sensor

In this version the positioner is supplied without a position sensor.

The following points should be observed during installation:

- Housing 1 (TZIDC Control Unit) contains the electronics and pneumatics and is mounted separately from the actuator.
- The remote position sensor is mounted on the linear and rotary actuator. Follow the operating instructions for the remote position sensor for mechanical mounting!
- The electrical connection is performed as described in **Connection on device - TZIDC Control Unit for remote position sensor** on page 41.

... 6 Installation

Mechanical mounting

Measurement and operating range to HW-Rev.: 5.0

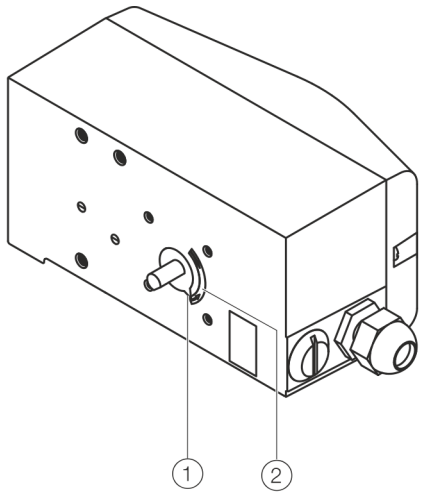

Figure 8: Working range

Arrow (1) on the device feedback shaft (position feedback point) must move between the arrow marks (2).

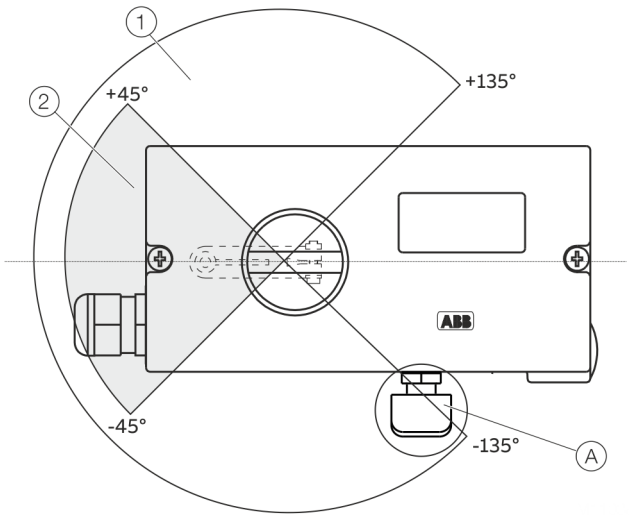

(1) Measuring range

(2) Operating range

(A) The position of the ventilation must be selected so that the IP rating of the housing is not impaired.

Figure 9: Measurement and operating ranges of the positioner

Operating range for linear actuators:
The operating range for linear actuators is maximum ±45° symmetrically to the longitudinal axis.
The usable span within the operating range is ideally 40°, but at least 25°. The usable span should run as symmetrically to the longitudinal axis as possible.

Operating range for rotary actuators:
The usable span is +57° to −57°, which must be entirely within the measuring range, but does not necessarily need to run symmetrically to the longitudinal axis.

Note
During installation make sure that the actuator travel or rotation angle for position feedback is implemented correctly.

Measurement and operating range from HW-Rev.: 5.01 with optional contactless position feedback

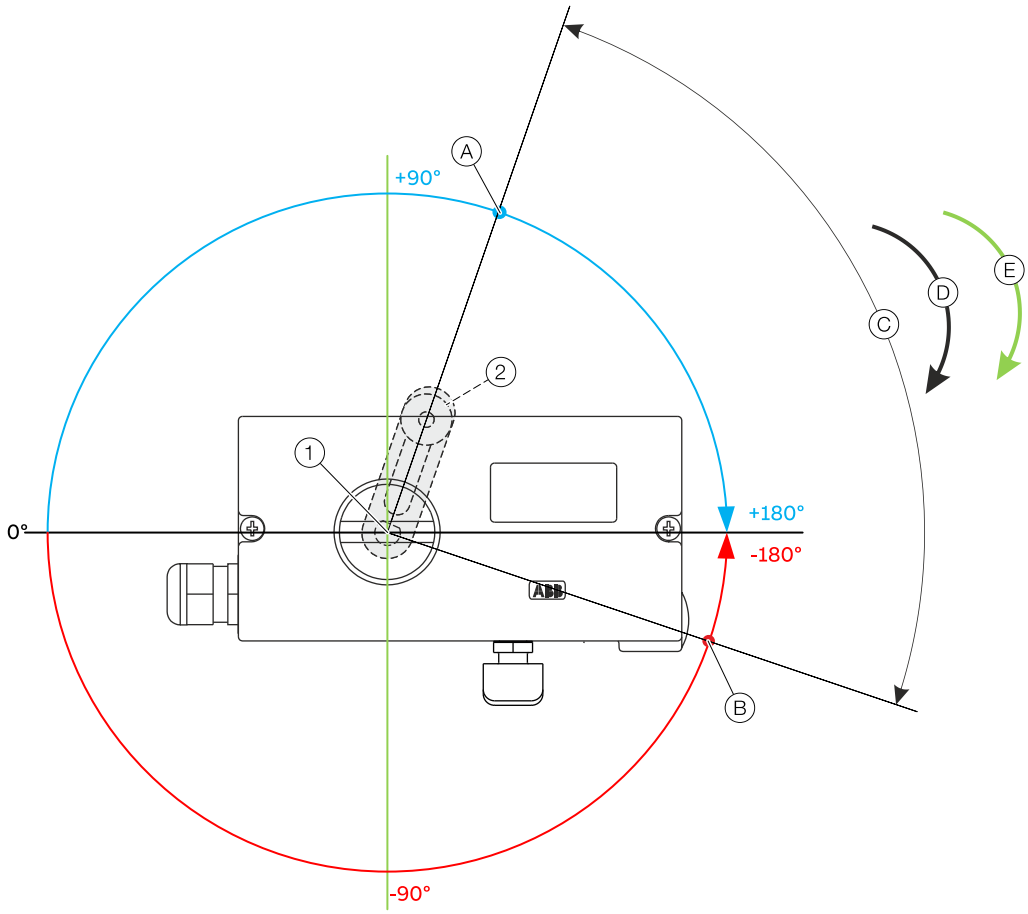

1. Device feedback shaft
2. Lever

A. Operating range 100% opening degree, OUT1 = supply pressure

B. Operating range 0% opening degree, OUT1 = ambient pressure

C. Operating range detected by the valve's/actuator's standard automatic adjustment. For rotary actuators, the operating range within each position can be up to 340°.

D. Rotational direction for parameter "P6.3 – SPRNG_Y2" detected by the standard automatic adjustment (When venting OUT 1, the device feedback shaft 1 turns clockwise).

E. Rotational direction for parameter "P6.7 – ZERO_POS" set by the standard automatic adjustment (When venting OUT 1, the device feedback shaft 1 turns clockwise).

Figure 10: Measurement and operating range with contactless position feedback (example for rotary actuators)

Devices from HW rev.: 5.01 can be equipped with the order option "Contactless sensor – S1".
The position feedback then takes place via a 360° sensor without mechanical end stops.

This allows a wider operating range of up to 350°. The operating range can then be at any point in the sensor range.

Automatic adjustment

The standard automatic adjustment for rotary and linear actuators is performed as described in **Standard automatic adjustment** on page 45.
Requirements for automatic adjustment:

- Mechanical end stops on valves
- Close valve by turning it to the right

For different installation situations such as: gear rack actuators, further parameter settings are required. Observe the technical description "TD/TZIDC/TZIDC-200/NON-CONTACT_SENSOR" for detailed information.

… 6 Installation

… Mechanical mounting

Mounting on linear actuators

For mounting on a linear actuator in accordance with IEC 60534 (lateral mounting as per NAMUR), the following attachment kit is available:

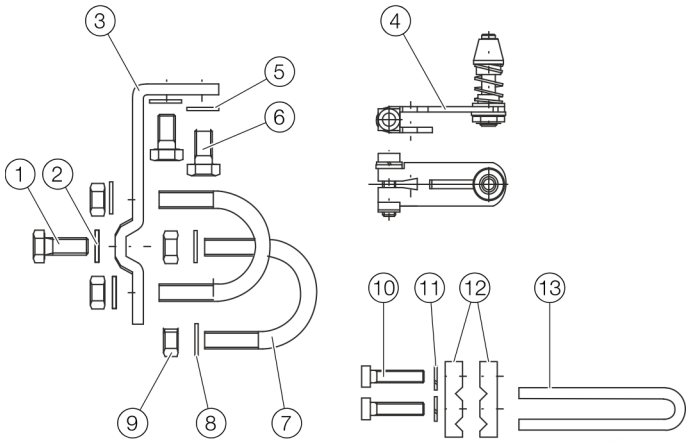

1	Screw	7	U-bolts
2	Washer	8	Washers
3	Mounting bracket	9	Nuts
4	Lever with follower pin (for travel 10 to 35 mm (0.39 to 1.38 in) or 20 to 100 mm (0.79 to 3.94 in)	10	Screws
		11	Spring washers
		12	Clamp plates
5	Washers	13	Follower guide
6	Screws		

Figure 11: Attachment kit

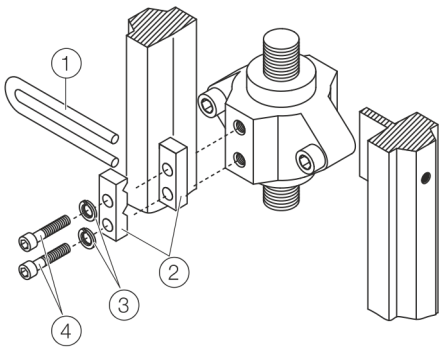

Figure 12: Attaching a follower guide to the actuator

1. Tighten the screws so that they are hand-tight.
2. Attach the follower guide 1 and clamp plates 2 with screws 4 and spring washers 3 to the actuator stem.

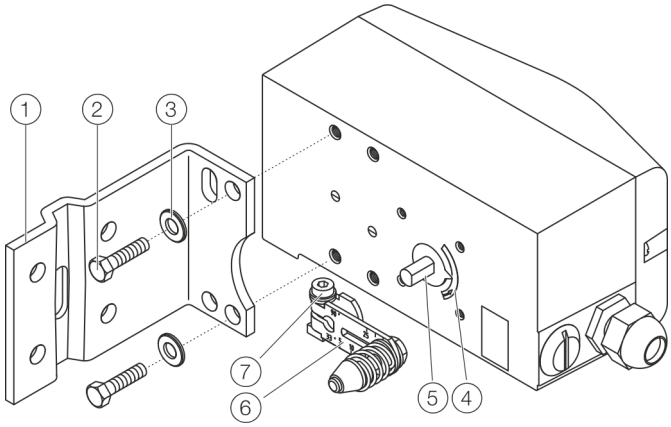

Figure 13: Mounting lever and bracket on the positioner

1. Attach the lever 6 to the feedback shaft 5 of the positioner (can only be mounted in one position due to the cut shape of the feedback shaft).
2. Using the arrow marks 4, check whether the lever moves within the operating range (between the arrows).
3. Hand-tighten the screw 7 on the lever.
4. Hold the prepared positioner (with the mount bracket 1 still loose) on the actuator so that the follower pin for the lever enters the follower guide to determine which tap holes on the positioner must be used for the mount bracket.
5. Secure the mount bracket 1 with screws 2 and washers 3 using the relevant tap holes on the positioner housing. Tighten the screws as evenly as possible to ensure subsequent linearity. Align the mount bracket in the oblong hole to ensure that the operating range is symmetrical (lever moves between the arrow marks 4).

Mounting on a cast iron yoke

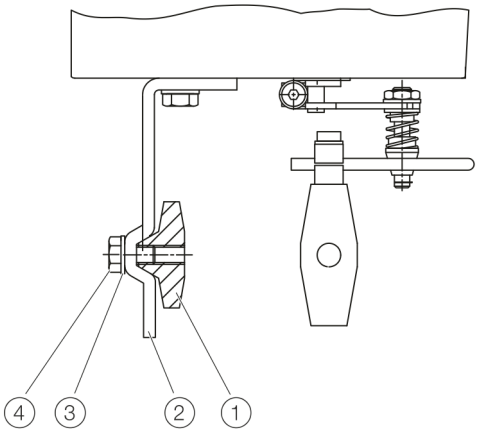

Figure 14: Mounting on a cast iron yoke

1. Fasten the mount bracket (2) with screw (4) and washer (3) to the cast iron yoke (1).

Mounting on a columnar yoke

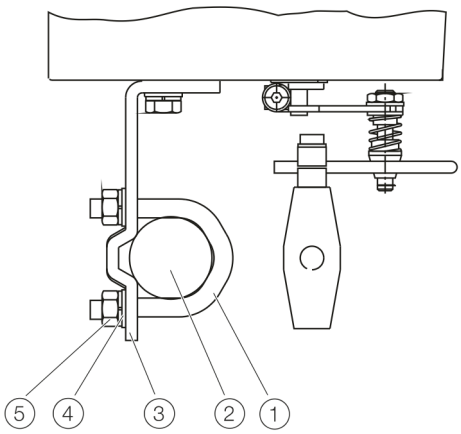

Figure 15: Mounting on a columnar yoke

1. Hold the mount bracket (3) in the suited position on the columnar yoke (2).
2. Insert the U-bolts (1) from the inside of the columnar yoke (2) through the holes of the mount bracket.
3. Apply washers 4 and nuts (5).
4. Tighten the nuts so that they are hand-tight.

Note
Adjust the height of the positioner on the cast iron yoke or columnar yoke until the lever is horizontal (based on a visual check) at half stroke of the valve.

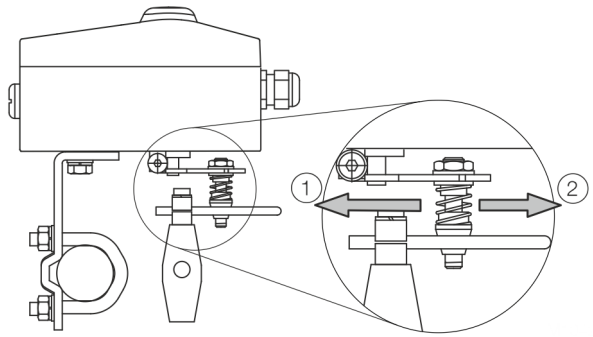

(1) Increase linkage (2) Decrease linkage

Figure 16: Positioner linkage

The scale on the lever indicates the link points for the various stroke ranges of the valve.
Move the bolt with the follower pin in the oblong hole of the lever to adjust the stroke range of the valve to the working range for the position sensor.
Moving the link point inwards increases the rotation angle of the sensor. Moving the link point outwards reduces the rotation angle of the sensor.
Adjust the actuator stroke to make use of as large an angle of rotation as possible (symmetrical around the center position) on the position sensor.

Recommended range for linear actuators:
40°

Minimum angle:
25°

Note
After mounting, check whether the positioner is operating within the measuring range.

... 6 Installation

... Mechanical mounting

Position of actuator bolt

The actuator bolt for moving the potentiometer lever can be mounted permanently on the lever itself or on the valve stem. Depending on the mounting method, when the valve moves the actuator bolt performs either a circular or a linear movement with reference to the center of rotation of the potentiometer lever. Select the chosen bolt position in the HMI menu in order to ensure optimum linearization. The default setting is actuator bolt on lever.

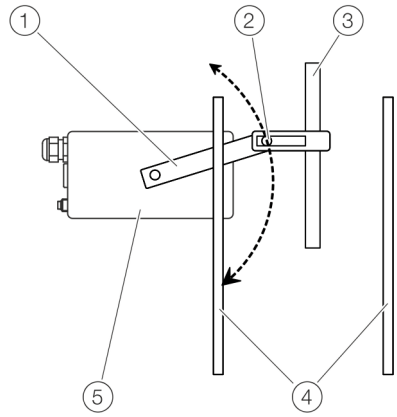

1 Potentiometer lever
2 Actuator bolts
3 Valve stem
4 Valve yoke
5 Positioner

Figure 17: Actuator bolts on the lever (rear view)

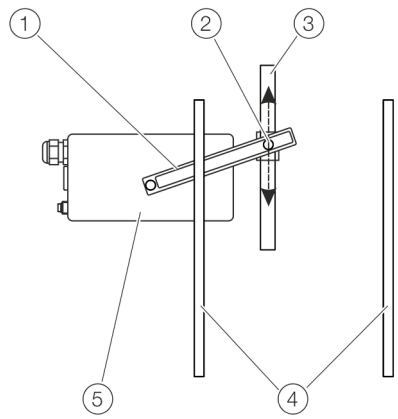

1 Potentiometer lever
2 Actuator bolts
3 Valve stem
4 Valve yoke
5 Positioner

Figure 18: Actuator bolts on the valve (rear view)

Mounting on rotary actuator

For mounting on part-turn actuators in accordance with VDI / VDE 3845, the following attachment kit is available:

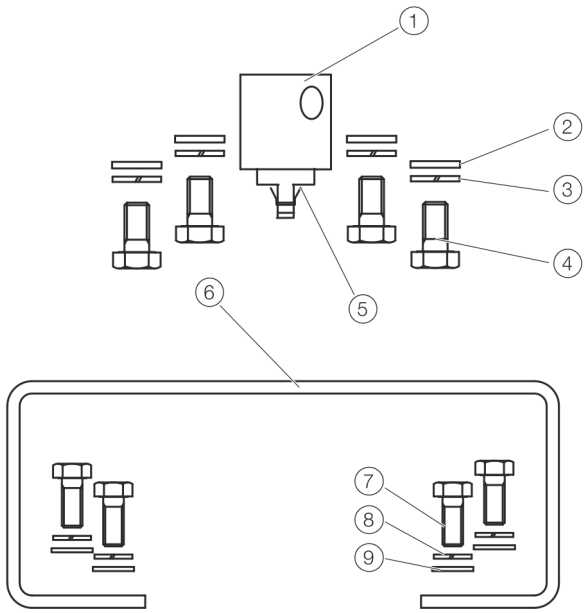

Figure 19: Attachment kit components

- Adapter 1 with spring 5
- four M6 screws each 4, spring washers 3 and washers 2 to fasten the attachment bracket 6 to the positioner
- four M5 screws 7, Spring washers 8 and washers 9 to fasten the attachment bracket to the actuator

Required tools:

- Wrench, size 8 / 10
- Allen key, size 3

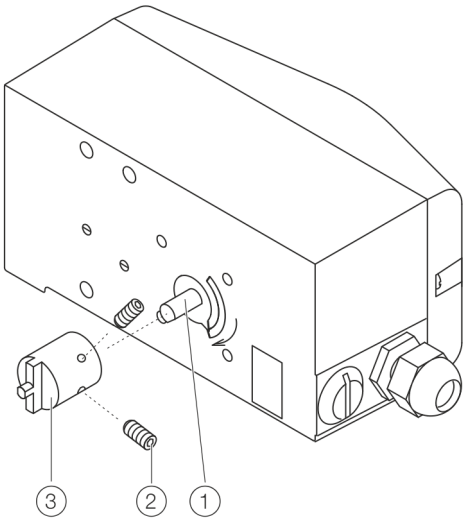

Figure 20: Mounting the adapter on the positioner

1. Determine the mounting position (parallel to actuator or at 90° angle)
2. Calculate the rotational direction of the actuator (right or left).
3. Move the part-turn actuator into the home position.
4. Pre-adjust feedback shaft.
   In order for the positioner to work within the operating range (see **Measurement and operating range to HW-Rev.: 5.0** on page 28 or **Measurement and operating range from HW-Rev.: 5.01 with optional contactless position feedback** on page 29), the installation position as well as the basic position and rotational direction of the actuator when determining the adapter position on axis (1) must be considered. For this purpose, the feedback shaft can be adjusted manually so that the adapter (3) can be attached in the correct position.
5. Place the adapter in the proper position on the feedback shaft and fasten with threaded pins (2). One of the threaded pins must be locked in place on the flat side of the feedback shaft.

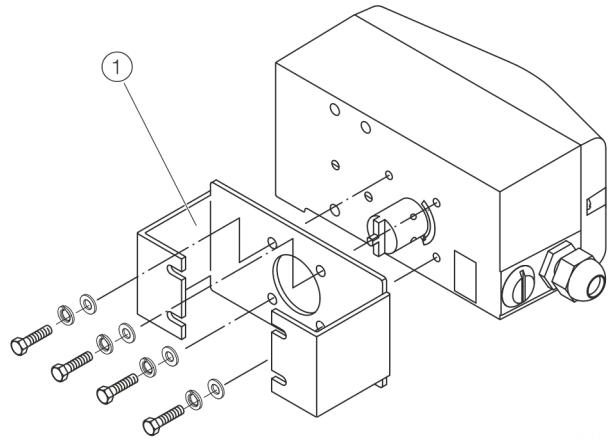

(1) Attachment bracket

Figure 21: Screwing the mounting bracket onto the positioner

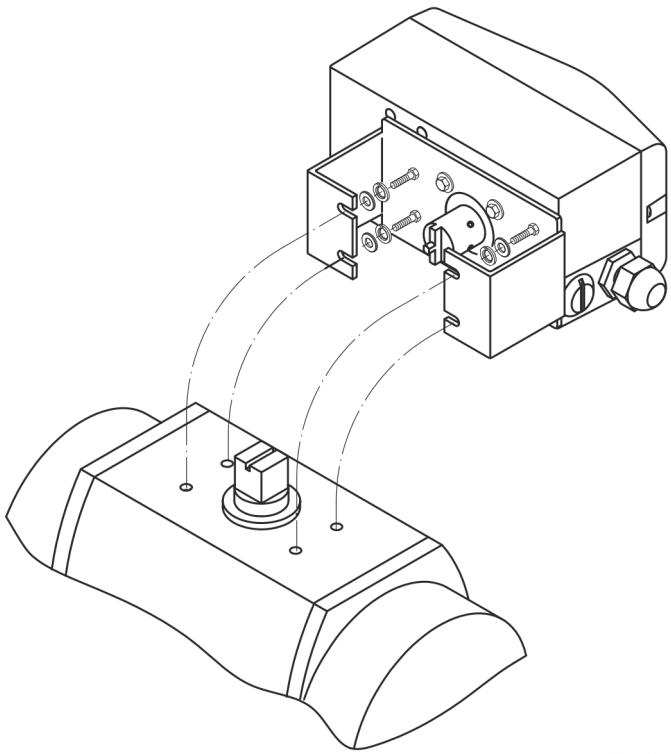

Figure 22: Screwing positioner onto actuator

Note

After mounting, check whether the operating range of the actuator matches the measurement range of the positioner, see **Measurement and operating range to HW-Rev.: 5.0** on page 28 or **Measurement and operating range from HW-Rev.: 5.01 with optional contactless position feedback** on page 29.

7 Electrical connections

Safety instructions

⚠ DANGER

Risk of explosion for devices with local communication interface (LCI)

A local communication interface (LCI) may not be operated in hazardous areas.

- Never use the local communication interface (LCI) on the main board in a hazardous area!

⚠ WARNING

Risk of injury due to live parts!

When the housing is open, contact protection is not provided and EMC protection is limited.

- Before opening the housing, switch off the power supply.

The electrical connection may only be established by authorized specialist personnel.
Notices on electrical connection in this instruction must be observed; otherwise, electric safety and the IP-rating may be adversely affected.
Safe isolation of electric circuits which are dangerous if touched is only guaranteed when the connected devices fulfill the requirements of EN 61140 (basic requirements for secure separation).
To ensure safe isolation, install supply lines so that they are separate from electrical circuits which are dangerous if touched, or implement additional isolation measures for them.

TZIDC / TZIDC Control Unit terminal assignment

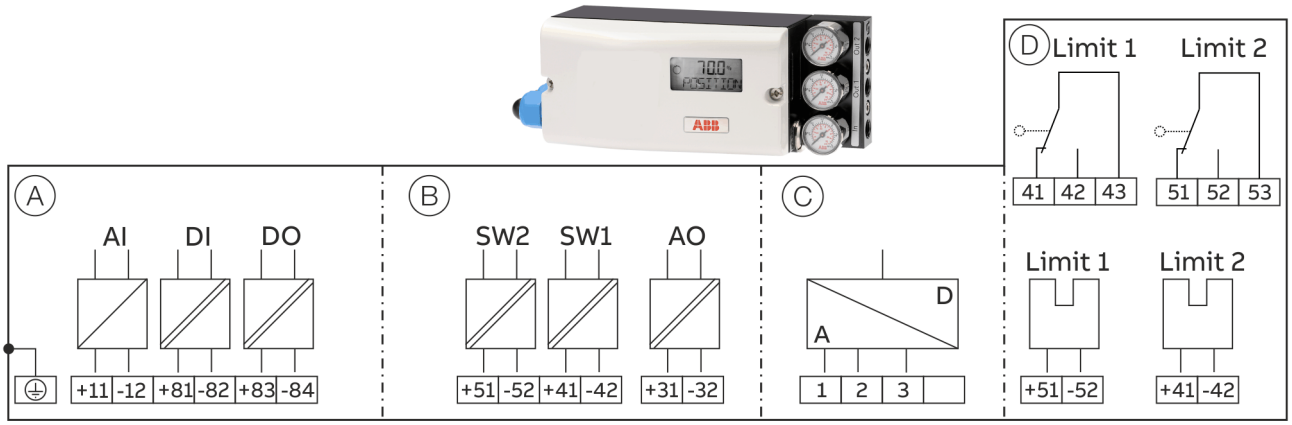

Ⓐ Basic device

Ⓑ Options

Ⓒ Connection TZIDC Remote Sensor / remote position sensor (only for TZIDC Control Unit version)

Ⓓ Options, Mechanical digital feedback with proximity switches or microswitches (not for TZIDC Control Unit design)

Figure 23: TZIDC Electrical connection

Connections for inputs and outputs

Terminal	Function/comments
+11 / −12	**Analog input**
+81 / −82	**Binary input DI**
+83 / −84	**Binary output DO2**
+51 / −52	**Plug-in module for digital feedback SW1** (Option module)
+41 / −42	**Plug-in module for digital feedback SW2** (Option module)
+31 / −32	**Plug-in module for analog feedback AO** (Option module)
1 / 2 / 3	**TZIDC remote sensor** (Only for options TZIDC Remote Sensor or TZIDC for remote position sensor)

Terminal	Function/comments
+51 / −52	**Mechanical digital feedback Limit 1 with proximity switch** (optional)
+41 / −42	**Mechanical digital feedback Limit 2 with proximity switch** (optional)
41 / 42 / 43	**Mechanical digital feedback Limit 1 with microswitch** (optional)
51 / 52 / 53	**Mechanical digital feedback Limit 2 with microswitch** (optional)

Note

The TZIDC can be fitted either with proximity switches or microswitches as mechanical digital feedback. It is not possible to combine both variants. For the TZIDC Control Unit with TZIDC Remote Sensor version, the mechanical digital feedback is located in the TZIDC Remote Sensor.

... 7 Electrical connections

TZIDC Remote Sensor terminal assignment

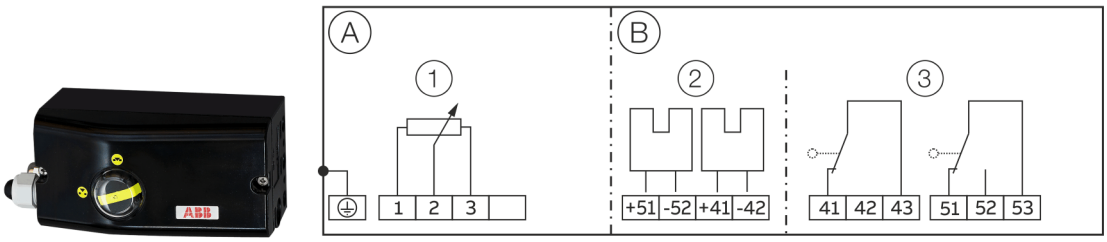

(A) Basic device
(B) Options

(1) Position sensor
(2) Mechanical digital feedback with proximity switches (option)
(3) Mechanical digital feedback with microswitches (option)

Figure 24: TZIDC Remote Sensor Electrical Connection

Connections for inputs and outputs

Terminal	Function/comments
1 / 2 / 3	**TZIDC control unit**
+51 / −52	**Mechanical digital feedback Limit 1 with proximity switch** (optional)
+41 / −42	**Mechanical digital feedback Limit 2 with proximity switch** (optional)
41 / 42 / 43	**Mechanical digital feedback Limit 1 with microswitch** (optional)
51 / 52 / 53	**Mechanical digital feedback Limit 2 with microswitch** (optional)

Note
The TZIDC Remote Sensor can be fitted either with proximity switches or microswitches as mechanical digital feedback. It is not possible to combine both variants. It is not possible to combine both variants.

Electrical data for inputs and outputs

Note

When using the device in potentially explosive atmospheres, note the additional connection data in **Use in potentially explosive atmospheres** on page 6!

Analog input

Set point signal analog (two-wire technology)	
Terminals	+11 / −12
Nominal operating range	4 to 20 mA
Split range configuration between	20 to 100 % of the nominal operating range can be parameterized
Maximum	50 mA
Minimum	3.6 mA
Starting at	3.8 mA
Load voltage	9.7 V at 20 mA
Impedance at 20 mA	485 Ω

Digital input

Input for the following functions:

- no function
- move to 0 %
- move to 100 %
- Hold previous position
- block local configuration
- block local configuration and operation
- block any access (local or via PC)

Binary input DI	
Terminals	+81 / -82
Supply voltage	24 V DC (12 to 30 V DC)
Input ‘logical 0’	0 to 5 V DC
Input ‘logical 1’	11 to 30 V DC
Input Current	maximum 4 mA

Digital output DO

Output configurable as alarm output by software.

Binary output DO	
Terminals	+83 / −84
Supply voltage	5 to 11 V DC (Control circuit in accordance with DIN 19234/NAMUR)
Output ‘logical 0’	> 0.35 mA to < 1.2 mA
Output ‘logical 1’	> 2.1 mA
Direction of action	Configurable ‘logical 0’ or ‘logical 1’

Option modules

Plug-in module for analog feedback AO*

Without any signal from the positioner (e.g. ‘no power’ or ‘initializing’) the module sets the output to > 20 mA (alarm level).

Terminals	+31 / -32
Signal range	4 to 20 mA (split ranges can be parameterized)
• in the event of an error	> 20 mA (alarm level)
Supply voltage, two-wire technology	24 V DC (11 to 30 V DC)
Characteristic curve	rising or falling (configurable)
Deviation	< 1 %

Plug-in module for digital feedback SW1, SW2*

Two software switches for binary position feedback (position adjustable within the range of 0 to 100 %, ranges cannot overlap)

Terminals	+41 / -42, +51 / -52
Supply voltage	5 to 11 V DC (Control circuit in accordance with DIN 19234 / NAMUR)
Output ‘logical 0’	< 1.2 mA
Output ‘logical 1’	> 2.1 mA
Direction of action	Configurable ‘logical 0’ or ‘logical 1’

* The module for analog feedback and the module for digital feedback have separate slots and can be used together.

Mechanical digital feedback

Two proximity switches or microswitches for independent signaling of the actuator position, switching points are adjustable between 0 bis 100 %.

Feedback on the actuator position using proximity switches Limit 1, Limit 2		
Terminals	+41 / -42, +51 / -52	
Supply voltage	5 to 11 V DC (Control circuit in accordance with DIN 19234/NAMUR)	
Direction of action	Metal tag in the proximity switch	Metal tag outside the proximity switch
Type SJ2-SN (NC; log 1)	< 1.2 mA	> 2.1 mA

Feedback on the actuator position using microswitches Limit 1, Limit 2	
Terminals	+41 / -42, +51 / -52
Supply voltage	maximum 24 V AC/DC
Load rating	Maximum 2 A
Contact surface	10 µm Gold (AU)

Mechanical position indicator

Indicator disk in enclosure cover linked with device feedback shaft.

These options are also available for retrofitting by Service.

... 7 Electrical connections

Connection on the device

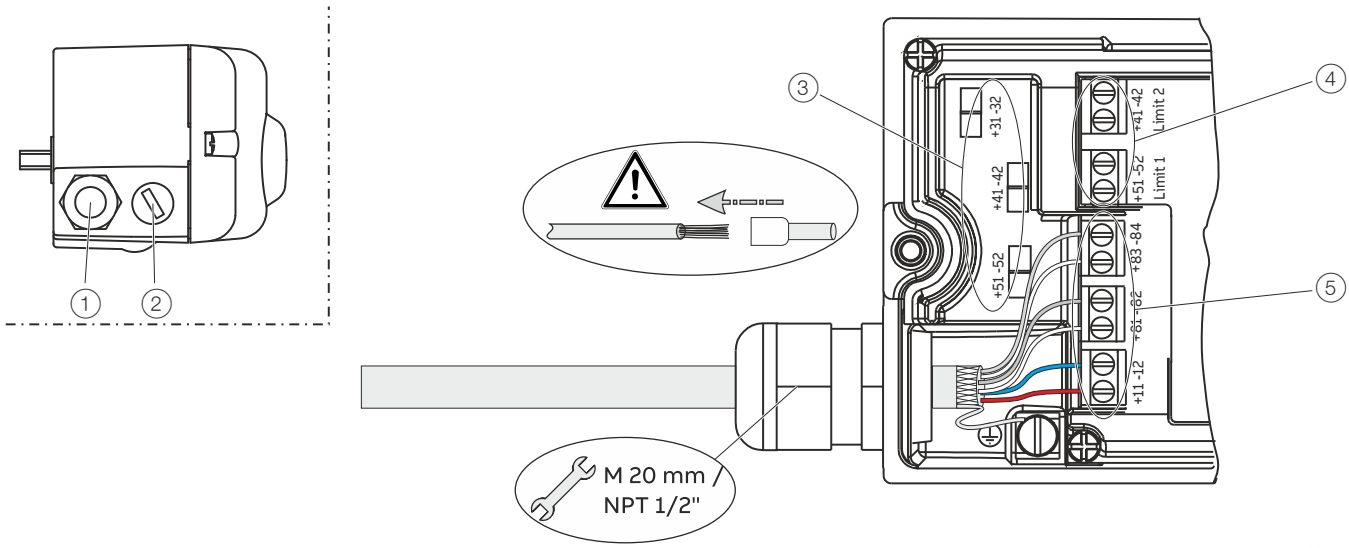

1. Cable gland
2. Blind plug
3. Terminals for plug-in modules for digital /analog feedback
4. Terminals for mechanical digital feedback on the actuator position using proximity switches or microswitches
5. Terminals for basic unit

Figure 25: Connection on device (example)

2 tap holes ½- 14 NPT or M20 × 1.5 are provided on the left side of the housing for cable entry in the housing.

Cable glands should be selected and implemented by the operator in accordance with their use and application requirements.
The cable glands must comply with the requirements of EN 60079-7, EN 60079-11 or EN 60079-15.
Especially in Ex applications, the requirements of the appropriate type of protection should be observed.

Note
The connecting terminals are delivered closed and must be unscrewed before inserting the wire.

1. Strip the wires to approximately 6 mm (0.24 in).
2. After stripping the cable end, fit the appropriate wire end sleeves and crimp
3. Connect the wires to the connecting terminals in line with the connection diagram.
   Tightening torque for the terminal screws:
   0.5 to 0.6 Nm

Conductor cross-section

Basic device

Electrical connections	
4 to 20 mA input	Screw terminals max. 2.5 mm^2 (AWG14)
Options	Screw terminals max. 1.0 mm^2 (AWG18)

Cross section	
Rigid / flexible wires	0.14 to 2.5 mm^2 (AWG26 to AWG14)
Flexible with wire end sleeve	0.25 to 2.5 mm^2 (AWG23 to AWG14)
Flexible with wire end sleeve no plastic sleeve	0.25 to 1.5 mm^2 (AWG23 to AWG17)
Flexible with wire end sleeve with plastic sleeve	0.14 to 0.75 mm^2 (AWG26 to AWG20)

Multi-wire connection capacity (two wire with the same cross-section)	
Rigid / flexible wires	0.14 to 0.75 mm^2 (AWG26 to AWG20)
Flexible with wire end sleeve no plastic sleeve	0.25 to 0.75 mm^2 (AWG23 to AWG20)
Flexible with wire end sleeve with plastic sleeve	0.5 to 1.5 mm^2 (AWG21 to AWG17)

Option modules

Cross section	
Rigid / flexible wires	0.14 to 1.5 mm^2 (AWG26 to AWG17)
Flexible with wire end sleeve no plastic sleeve	0.25 to 1.5 mm^2 (AWG23 to AWG17)
Flexible with wire end sleeve with plastic sleeve	0.25 to 1.5 mm^2 (AWG23 to AWG17)

Multi-wire connection capacity (two wire with the same cross-section)	
Rigid / flexible wires	0.14 to 0.75 mm^2 (AWG26 to AWG20)
Flexible with wire end sleeve no plastic sleeve	0.25 to 0.5 mm^2 (AWG23 to AWG22)
Flexible with wire end sleeve with plastic sleeve	0.5 to 1 mm^2 (AWG21 to AWG18)

Feedback on the actuator position using proximity switches or microswitches	
Rigid wire	0.14 to 1.5 mm^2 (AWG26 to AWG17)
Flexible wire	0.14 to 1.0 mm^2 (AWG26 to AWG18)
Flexible with wire end sleeve no plastic sleeve	0.25 to 0.5 mm^2 (AWG23 to AWG22)
Flexible with wire end sleeve with plastic sleeve	0.25 to 0.5 mm^2 (AWG23 to AWG22)

... 7 Electrical connections

Connection on device - TZIDC Control Unit with TZIDC Remote Sensor

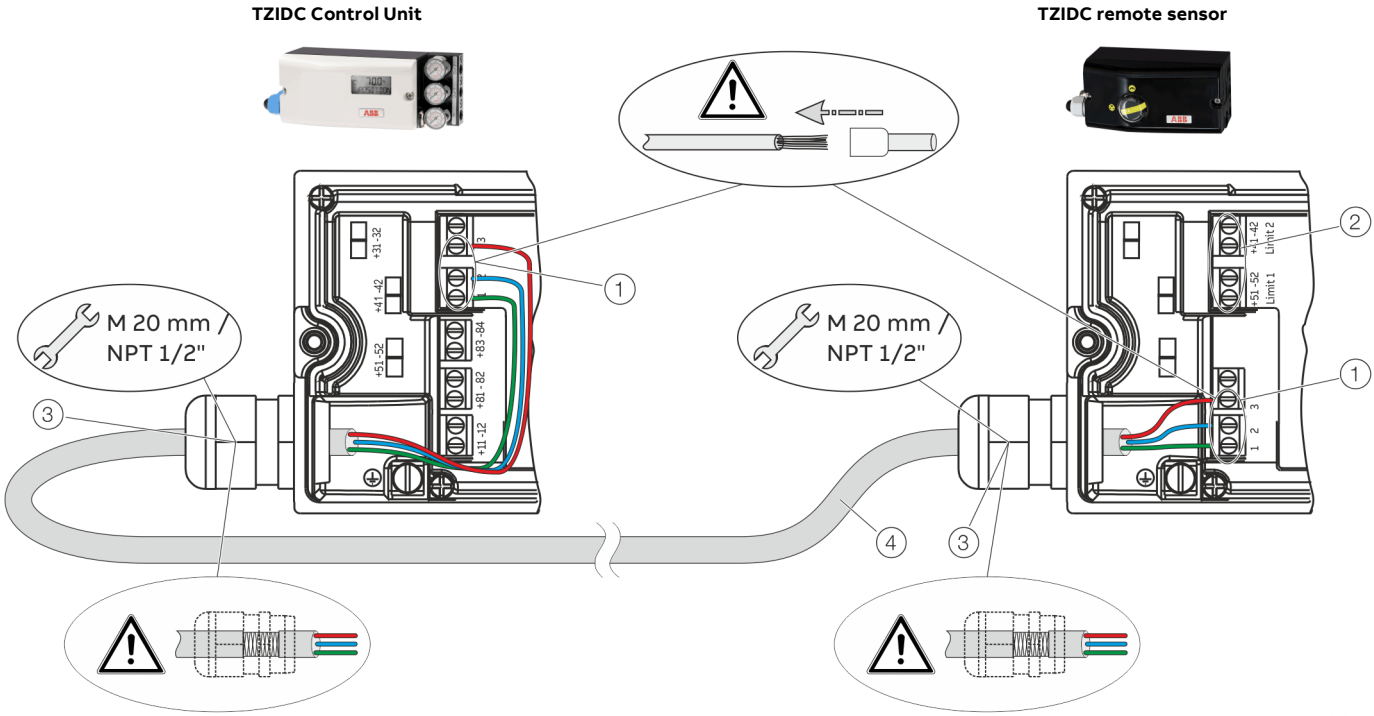

1. Terminals TZIDC Remote Sensor
2. Terminals for mechanical digital feedback
3. EMC Cable gland
4. Shielded connection cable

Figure 26: Connection of TZIDC Control Unit with TZIDC Remote Sensor (example)

In the case of the 'TZIDC Control Unit with TZIDC Remote Sensor' design, the components are supplied in two housings, which together form one harmonized unit.
Housing 1 (TZIDC Control Unit) contains the electronics and pneumatics along with the following options (where applicable):

- Plug-in module for analog feedback
- Plug-in module for digital feedback

Housing 2 (TZIDC Remote Sensor) contains the position sensor and is suitable for mounting on linear or part-turn actuators.
If necessary, the following options can be installed if required:

- Optical position indicator
- Mechanical digital feedback with proximity switches or microswitches.

Connect the positioner (TZIDC Control Unit, housing 1) and remote position sensor (TZIDC Remote Sensor, housing 2) while following the instructions below:

- The sensor and the electronics have been matched. Ensure that only devices with the same serial number are connected.
- A shielded 3-wire cable with a maximum length of 10 m (33 ft) must be used for the connection.
- Route the cable into the terminal compartment through the EMC cable glands. Ensure that the shielding is secured correctly in the EMC cable glands.
- Connect the cables in accordance with the electrical connections and tighten the screws of the terminals so that they are hand-tight.
- The electrical connection of the TZIDC Control Unit and the optional modules are described in **TZIDC / TZIDC Control Unit terminal assignment** on page 35.
- If the TZIDC Control Unit is fastened so that it is it non-conductive, the housing must be grounded (TZIDC Control Unit and TZIDC Remote Sensor housing with the same electric potential); otherwise control deviations could occur with regard to analog position feedback.
- Use wire end ferrules when connecting.

Connection on device - TZIDC Control Unit for remote position sensor

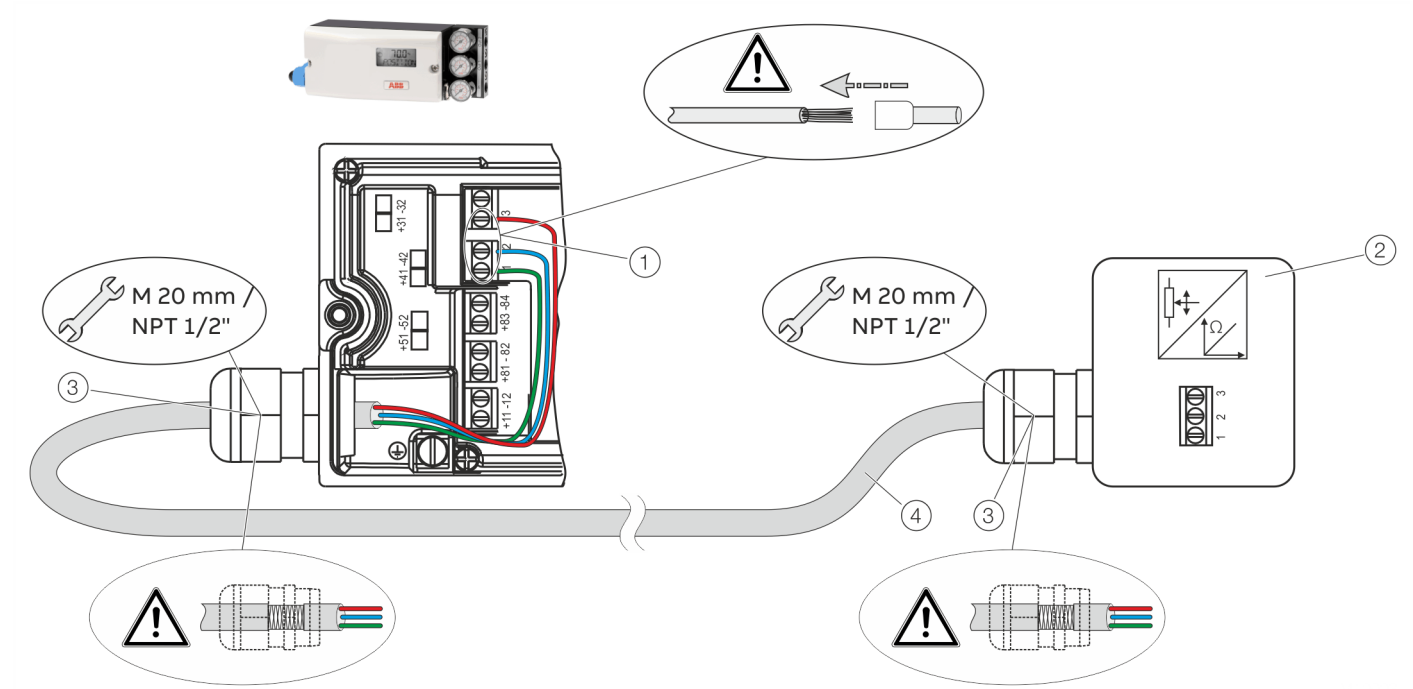

1. Terminals for remote position sensor
2. Remote position sensor
3. EMC Cable gland
4. Shielded connection cable

Figure 27: Connection of TZIDC Control Unit with remote position sensor (example)

With the TZIDC designed for remote position sensors, the positioner is supplied without a position sensor.

The TZIDC Control Unit contains the electronics and pneumatics along with the following options (where applicable):

- Plug-in module for analog feedback
- Plug-in module for digital feedback

Any position sensor (4 to 30 kΩ, with line break detection 4 to 18 kΩ) can be connected.

Connect the positioner (TZIDC Control Unit) and remote position sensor while observing the following instructions:

- A shielded 3-wire cable with a maximum length of 10 m (33 ft) must be used for the connection.
- Route the cable into the terminal compartment through the EMC cable glands. Ensure that the shielding is secured correctly in the EMC cable glands.
- Connect the cables in accordance with the electrical connections and tighten the screws of the terminals so that they are hand-tight.
- The electrical connection of the TZIDC Control Unit and the optional modules are described in **TZIDC / TZIDC Control Unit terminal assignment** on page 35.
- If the TZIDC Control Unit is fastened such that it is it non-conductive, the housing must be grounded (TZIDC Control Unit and remote position sensor housing with the same electric potential); otherwise control deviations could occur with regard to analog position feedback.
- Use wire end ferrules when connecting.
- The pneumatic outputs must be connected to the actuator using cables of at least Ø 6 mm (0.23 in).
- If the device is being operated on a cylinder, for reasons associated with linearity you should run automatic adjustment for rotary actuators.

8 Pneumatic Connections

Safety instructions

⚠ CAUTION

Risk of injury

Risk of injury from pressurized positioner / actuator.

- Before starting work on the positioner / actuator, switch off the air supply and vent the positioner / actuator.

NOTICE

Damage to components!

Contamination in the air pipe and positioner can damage components.

- Dust, splinters, and any other particles of dirt must be blown-out before the pipe is connected.

NOTICE

Damage to components!

Pressure above 6 bar (90 psi) can damage the positioner or actuator.

- Provisions must be made (e.g. by using a pressure reducer) to make sure that the pressure does not rise above 6 bar (90 psi)*, even in the event of a fault.

* 5.5 bar (80 psi) (marine version)

Note

The positioner must only be supplied with instrument air that is free of oil, water, and dust.
The purity and oil content must meet the requirements of Class 3 in accordance with DIN/ISO 8573-1.

Information on double acting actuators with spring-return mechanism

On double-acting actuators with spring-return mechanism, a pressure that significantly exceeds the supply air pressure value can be generated during operation by the springs in the chamber opposite the springs.
This may damage the positioner or adversely affect control of the actuator.
In order to ensure that this behavior cannot occur, it is recommended to install a pressure compensation valve between the springless chamber and the supply air for these types of applications. It enables the increased pressure to be transferred back to the air inlet line.
The opening pressure of the check valve should be < 250 mbar (< 3.6 psi).

Notes on ABB pressure gauge blocks

The pressure gauge blocks available as accessories from ABB have a restricted operating temperature range and a different IP rating than the positioner.
The operator must take these restrictions into account when using ABB pressure gauge blocks.

ABB pressure gauge block specification	
Operating temperature range	−5 °C to 60 °C (23 to 140 °F)
IP rating	IP 30

Connection on the device

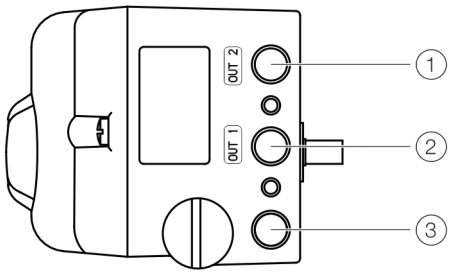

① OUT 2
② OUT 1
③ IN

Figure 28: Pneumatic connections

Marking	Pipe connection
IN	Supply air, pressure 1.4 to 6 bar (20 to 90 psi) Marine version: • Supply air, pressure 1.4 to 5.5 bar (20 bis 80 psi)*
OUT1	Output pressure to the actuator
OUT2	Output pressure to the actuator (2. Connection with double acting actuator)

* (Marine version)

Join the pipe connections according to the designation, observing the following points:

- All pneumatic piping connections are located on the right-hand side of the positioner. G¼ or ¼ 18 NPT tap holes are provided for the pneumatic connections. The positioner is labeled according to the tap holes available.
- We recommend that you use a pipe with dimensions of 12 × 1.75 mm.
- The supply air pressure required to apply the actuating force must be adjusted in line with the output pressure in the actuator. The working range for the positioner is between 1.4 and 6 bar (20 to 90 psi)**.

** 1.4 to 5.5 bar (20 to 80 psi) marine version

Air supply

Instrument air*	
Purity	Maximum particle size: 5 µm Maximum particle density: 5 mg/m^3
Oil content	Maximum concentration 1 mg/m^3
Pressure dew point	10 K below operating temperature
Supply pressure**	Standard design: 1.4 to 6 bar (20 to 90 psi) Marine version: 1.6 to 5.5 bar (23 to 80 psi)
Air consumption***	< 0.03 kg/h / 0.015 scfm

* Free of oil, water and dust in accordance with DIN / ISO 8573-1, pollution and oil content according to Class 3 (except for natural gas variant)

** Do not exceed the maximum output pressure of the actuator

*** Independent of supply pressure

9 Commissioning

Note
The electrical power supply and supply air pressure data indicated on the name plate must be complied with during commissioning.

⚠ CAUTION

Risk of injury due to incorrect parameter values!
Incorrect parameter values can cause the valve to move unexpectedly. This can lead to process failures and result in injuries.

- Before recommissioning a positioner that was previously in use at another location, always reset the device to its factory settings.
- Never start automatic adjustment before restoring the factory settings!

Note
Please observe the information in **Operation** on page 48 to operate the device!

Commissioning the positioner:

1. Open the pneumatic power supply.
2. Power-up the electric power supply and feed in the setpoint signal 4 to 20 mA.
3. Checking mechanical mounting:
   - Press**MODE** and hold; additionally press ⬆ or ⬇ until operating mode 1.3 (manual adjustment in the measuring range) is displayed. Release **MODE**.
   - Press⬆ or ⬇ to move the actuator into the mechanical end position; check the end positions; rotational angle is displayed in degrees; for high-speed mode, press ⬆ or ⬇ simultaneously.

Recommended rotational angle range	
Linear actuators	−20 to 20°
Rotary actuators	−57 to 57°
Minimum angle	25°

4. Perform standard automatic adjustment in accordance with **Standard automatic adjustment** on page 45.

Commissioning of the positioner is now complete, and the device is ready for operation.

Operating modes

Selection from the operating level

1. Press and hold down **MODE**.
2. Also press and release ⬆ rapidly as often as required. The selected operating mode is displayed.
3. Release **MODE**.

The position is displayed in % or as a rotation angle.

Operating mode	Mode indicator	Position indicator
1.0 Control mode* with adaptation of the control parameters	1.0 CTRL_ADP	50.0 % POSITION
1.1 Control mode* without adaptation of the control parameters	1.1 CTRL_FIX	50.0 % POSITION
1.2 Manual adjustment** in the operating range. Adjust*** using ⬆or ⬇	1.2 MANUAL	50.0 % POSITION
1.3 Manual adjustment** in the measuring range. Adjust*** using ⬆or ⬇	1.3 MAN_SENS	-15.0 ° SENS_POS

* Since self-optimization in operating mode 1.0 is subject to several factors during control operation with adaptation, incorrect adjustments could appear over an extended period.

** Positioning not active.

*** For high-speed mode, press ⬆ and ⬇ simultaneously.

Standard automatic adjustment

Note
Standard Auto Adjust does not always result in optimum control conditions.

Standard automatic adjustment for linear actuators*
1. MODE Press and hold until ADJ_LIN is displayed.
2. MODE Press and hold until the countdown ends.
3. Release MODE; this starts Autoadjust.

Standard automatic adjustment for rotary actuators*
1. ENTER Press and hold until ADJ_ROT is displayed.
2. ENTER Press and hold until the countdown ends.
3. Release ENTER; this starts Autoadjust.

If Autoadjust is successful, the parameters will be stored automatically and the positioner will revert to operating mode 1.1.

If an error occurs during Autoadjust, the process will be terminated with an error message.

Perform the following steps if an error occurs:
1. Press and hold down operating button ⬆ or ⬇ for approximately three seconds.

The unit will switch to the operating level, mode 1.3 (manual adjustment within the measuring range).
2. Check mechanical mounting in accordance with **Mechanical mounting** on page 28 and repeat the standard automatic adjustment.

* The zero position is determined automatically and saved during standard automatic adjustment, counter-clockwise (CTCLOCKW) for linear actuators and clockwise (CLOCKW) for rotary actuators.

Sample parameters

'Change the zero position of the LCD display from clockwise (CLOCKW) to counter-clockwise limit stop (CTCLOCKW)'

Initial situation: the positioner is in bus operation on the operating level.

1. Switching to the configuration level:
   - Press and hold down⬆ and ⬇ simultaneously,
   - additionally quickly press and release **ENTER**,
   - Wait for the countdown to go from 3 to 0,
   - Release⬆ and ⬇.

   The following is now shown in the display:

2. Switching to parameter group 3._:
   - Press and hold down **MODE** and **ENTER** simultaneously,
   - additionally quickly press and release ⬆ 2×,

   The following is now shown in the display:

   - Release **MODE** and **ENTER**.

   The following is now shown in the display:

3. Selecting parameter 3.2:
   - Press and hold down **MODE**,
   - additionally quickly press and release ⬆ 2×,

   The following is now shown in the display:

   — Release **MODE**.

… 9 Commissioning

… Sample parameters

4. Changing parameter settings:
   - Quickly press and release ⬆ to select **CTCLOCKW**.

5. Switching to parameter 3.3 (Return to operating level) and saving the new settings:
   - Press and hold down **MODE**,
   - additionally quickly press and release ⬆ 2×,

   The following is now shown in the display:

   - Release **MODE**,
   - Quickly press and release ⬆ to select **NV_SAVE**,
   - Press **ENTER** and hold down until the countdown goes from 3 to 0.

The new parameter setting is saved and the positioner automatically returns to the operating level. It continues in the operating mode that was active prior to the configuration level being called up.

Setting the option modules

Setting the mechanical position indication

1. Loosen the screws for the housing cover and remove it.
2. Rotate the position indicator on the shaft to the desired position.
3. Attach the housing cover and screw it onto the housing. Tighten the screws so that they are hand-tight.
4. Attach the symbol label to mark the minimum and maximum valve positions on the housing cover.

Note

The labels are located on the inside of the housing cover.

Setup of the feedback on the actuator position using proximity switches

1. Loosen the screws for the housing cover and remove it.

⚠ CAUTION

Risk of injury!

The device includes slot sensors with sharp edges.

- Adjust the metal tags using a screwdriver only!

2. Set the upper and lower switching points for binary feedback as follows:
   - Select the ‘Manual Adjustment’ operating mode and move the final control element by hand into the lower switching position.
   - Using a screwdriver, adjust the metal tag of proximity switch 1 (lower contact) on the axis until contact is made, i. e. just before it is inserted in the proximity switch. The metal tag enters proximity switch 1 when the axis is rotated clockwise (as viewed from the front).
   - Move the final control element by hand into the upper switching position.
   - Using a screwdriver, adjust the metal tag of proximity switch 2 (upper contact) on the axis until contact is made, i. e.just before it is inserted in the proximity switch. The metal tag enters proximity switch 2 when the axis is rotated counter-clockwise (as viewed from the front).
3. Attach the housing cover and screw it onto the housing.
4. Tighten the screws so that they are hand-tight.

Setup of the feedback on the actuator position using microswitches

1. Loosen the screws for the housing cover and remove it.
2. Select the 'Manual Adjustment' operating mode and move the final control element by hand into the desired switching position for contact 1.
3. Set maximum contact (①, lower washer).
   Fasten the upper washer with the special adjustment retainer and rotate the lower washer manually.
4. Select the 'Manual Adjustment' operating mode and move the final control element by hand into the desired switching position for contact 2.
5. Set minimum contact (②, upper washer);
   Fasten the lower washer with the special adjustment retainer and rotate the upper washer manually.
6. Connect the microswitch.
7. Attach the housing cover and screw it on to the housing.
8. Tighten the screws so that they are hand-tight.

10 Operation

Safety instructions

⚠ CAUTION

Risk of injury due to incorrect parameter values!
Incorrect parameter values can cause the valve to move unexpectedly. This can lead to process failures and result in injuries.

- Before recommissioning a positioner that was previously in use at another location, always reset the device to its factory settings.
- Never start automatic adjustment before restoring the factory settings!

If there is a chance that safe operation is no longer possible, take the device out of operation and secure it against unintended startup.

Parameterization of the device

The LCD display features operating buttons which enable the device to be operated with the housing cover open.

Menu navigation

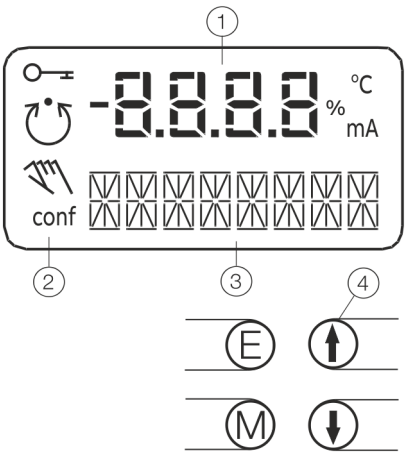

1 Value display with unit
2 Symbol display
3 Designator display
4 Operating buttons for menu navigation

Figure 29: LCD display with operating buttons

Value display with unit

This 7-segment display with four digits indicates parameter values or parameter reference numbers. For values, the physical unit (°C, %, mA) is also displayed.

Designator display

This 14-segment display with eight digits indicates the designators of the parameters with their status, of the parameter groups, and of the operating modes.

Description of symbols

Symbol	Description
	Operation or access is restricted.
	Control loop is active. The symbol is displayed when the positioner is in operating mode 1.0 CTRL_ADP (adaptive control) or 1.1 CTRL_FIX (fixed control) at operating level. On the configuration level there are test functions for which the controller will be active as well. The control loop symbol will also be displayed when these functions are active.
	Manual adjustment. The symbol is displayed when the positioner is in operating mode 1.2 MANUAL (manual adjustment within the stroke range) or 1.3 MAN_SENS (manual adjustment within the measuring range) at operating level. At configuration level, manual adjustment is active when setting the valve range limits (parameter group 6 MIN_VR (min. of valve range) and 6 MAX_VR (max. of valve range)). The symbol will also be displayed when these parameters are being set.
conf	The configuration icon indicates that the positioner is at the configuration level. The control operation is inactive.

Operating button functions

The four operating buttons Ⓔ **(ENTER)**, Ⓜ **(MODE)**, ⬆ and ⬇ are pressed individually or in certain combinations depending on the desired function.

Control button	Meaning
Ⓔ **(ENTER)**	• Acknowledge message • Start an action • Save in the non-volatile memory
Ⓜ **(MODE)**	• Choose operating mode (operating level) • Select parameter group or parameter (configuration level)
⬆	UP direction button
⬇	DOWN direction button
Press and hold all four buttons for 5 s	Reset

Menu levels

The positioner has two operating levels.

Operating level

On the operating level the positioner operates in one of four possible operating modes (two for automatic control and two for manual mode). Parameters cannot be changed or saved on this level.

Configuration level

On this level most of the parameters of the positioner can be changed locally. The PC is required to change the limit values for the movement counter, the travel counter, and the user-defined characteristic curve.

On the configuration level the active operating mode is deactivated. The I/P module is in neutral position. The control operation is inactive.

NOTICE

Property damage

During external configuration via a PC, the positioner no longer responds to the set point current. This may lead to process failures.

- Before any external parameterization, always move the actuator to the safety position and activate manual adjustment.

... 10 Operation

HART® Parameter Overview

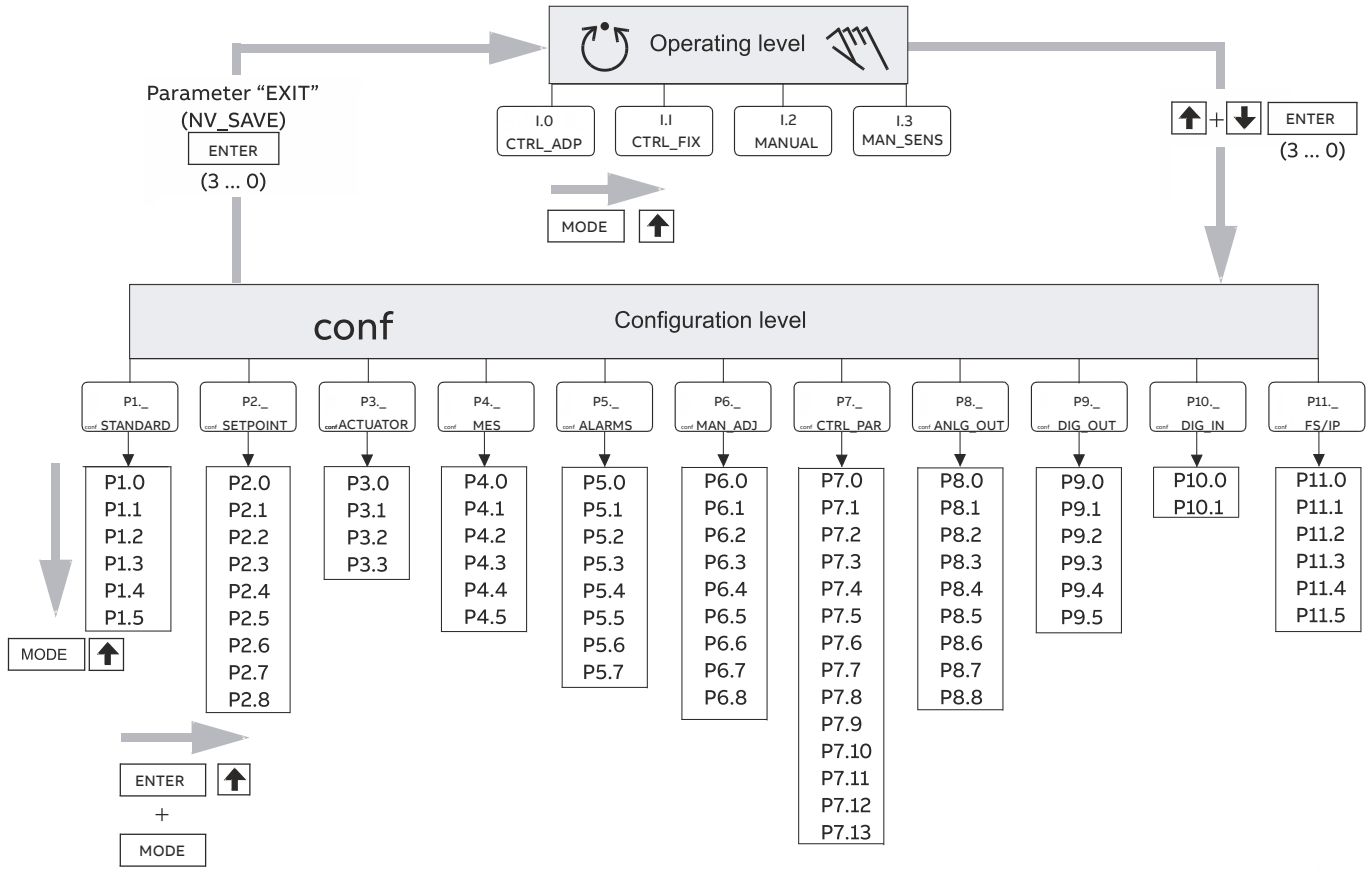

Figure 30: HART® parameter overview

Parameter description HART®

Parameter	Display	Function		Possible parameter setting	Unit	Factory setting
P1._	**STANDARD**					
P1.0	**ACTUATOR**	Actuator type	Actuator type	LINEAR, ROTARY	---	LINEAR
P1.1	**AUTO_ADJ**	Auto adjust	Autoadjust	Function	---	---
P1.2	**ADJ_MODE**	Auto adjust mode	Automatic adjustment mode	FULL,STROKE,CTRL_PAR, ZERO_POS, LOCKED		FULL
P1.3	**TEST**	Test	Test	Function	---	INACTIVE
P1.4	**FIND_DEV**	Find device	Find device	DISABLE, ONE TIME, CONTINOUS	---	DISABLE
P1.5	**EXIT**	Return	Return to operating level	Function	---	NV_SAVE
P2._	**SETPOINT**					
P2.0	**MIN_RGE**	Min setpoint range	Min. setpoint range	4.0 to 18.4	mA	4.0
P2.1	**MAX_RGE**	Max setpoint range	Max. setpoint range	20.0 to 5.6	mA	20.0
P2.2	**CHARACT**	Charact. curve	Characteristic curve	LINEAR, 1:25, 1:50, 25:1, 50:1, USERD	---	LINEAR
P2.3	**ACTION**	Valve action	Direction of action	DIRECT, REVERSE	---	DIRECT
P2.4	**SHUT_CLS**	Shut-off value 0%	Shut-off value 0 %	OFF, 0.1 to 45.0	%	1.0
P2.5	**SHUT_OPN**	Shut off value 100%	Shut-off value 100%	55.0 to 100.0, OFF	%	OFF
P2.6	**RAMP UP**	Set point ramp, up	Setpoint ramp (up)	OFF, 0 to 200	---	OFF
P2.7	**RAMP DN**	Set point ramp, down	Setpoint ramp (down)	OFF, 0 to 200	---	OFF
P2.8	**EXIT**	Return	Return to operating level	Function	---	NV_SAVE
P3._	**ACTUATOR**					
P3.0	**MIN_RGE**	Min. of stroke range	Operating range, min.	0.0 to 90.0	%	0.0
P3.1	**MAX_RGE**	Max. of stroke range	Operating range, max.	100.0 to 10.0	%	100
P3.2	**ZERO_POS**	Zero position	Zero position	CLOCKWISE, CTCLOCKWISE	---	CTCLOCKWISE
P3.3	**EXIT**	Return	Return to operating level	Function	---	NV_SAVE
P4._	**MESSAGES**					
P4.0	**TIME_OUT**	Control time out	Dead band time limit	OFF, to 200	---	OFF
P4.1	**POS_SW1**	Position switch 1	Switching point SW1	0.0 to 100.0	%	0.0
P4.2	**POS_SW2**	Position switch 2	Switching point SW2	0.0 to 100.0	%	100.0
P4.3	**SW1_ACTV**	Switchpoint 1 enable	Active direction SW1	FALL_BEL, EXCEED	---	FALL_BEL
P4.4	**SW2_ACTV**	Switchpoint 2 enable	Active direction SW2	FALL_BEL, EXCEED	---	EXCEED
P4.5	**EXIT**	Return	Return to operating level	Function	---	NV_SAVE
P5._	**ALARMS**					
P5.0	**LEAKAGE**	Leakage detection	Leakage to actuator	ACTIVE, INACTIVE	---	INACTIVE
P5.1	**SP_RGE**	Setpoint rng monitor	Outside the setpoint range	ACTIVE, INACTIVE	---	INACTIVE
P5.2	**SENS_RGE**	Sens. range monitor	Operating range exceeded	ACTIVE, INACTIVE	---	INACTIVE
P5.3	**CTRLER**	Controller monitor	Controller inactive	ACTIVE, INACTIVE	---	INACTIVE
P5.4	**TIME_OUT**	Control time out	Dead band time limit	ACTIVE, INACTIVE	---	INACTIVE
P5.5	**STRK_CTR**	Stroke counter	Movement counter	ACTIVE, INACTIVE	---	INACTIVE
P5.6	**TRAVEL**	Travel counter	Travel counter	ACTIVE, INACTIVE	---	INACTIVE
P5.7	**EXIT**	Return	Return to operating level	Function	---	NV_SAVE

... 10 Operation

... Parameter description HART®

Parameter	Display	Function		Possible parameter setting	Unit	Factory setting
P6._	**MAN_ADJ**					
P6.0	**MIN_VR**	Min. valve range	Operating range, min.	0.0 to 100.0	%	0
P6.1	**MAX_VR**	Max. valve range	Operating range, max.	0.0 to 100.0	%	100
P6.2	**ACTUATOR**	Actuator type	Actuator type	LINEAR, ROTARY	---	LINEAR
P6.3	**SPRNG_Y2**	Spring action (Y2)	Spring action (Y2)	CLOCKWISE, CTCLOCKWISE	---	CTCLOCKWISE
P6.4	**DANG_DN**	Dead angle close	Dead angle 0 %	0.0 to 45.0	%	0.0
P6.5	**DANG_UP**	Dead angle open	Dead angle 100%	55.0 to 100.0	%	100.0
P6.6	**BOLT_POS**	Bolt position	Actuator position	LEVER, STEM	---	LEVER
P6.7	**ZERO_POS**	Zero position	Rotational direction in relation to 0% position	CW (clockwise) CCW (counterclockwise)	---	CCW
P6.8	**EXIT**	Return	Return to operating level	Function	---	NV_SAVE
P7._	**CTRL_PAR**					
P7.0	**KP UP**	KP value, up	KP value (up)	0.1 to 120.0	---	5.0
P7.1	**KP DN**	KP value, down	KP value (down)	0.1 to 120.0	---	5.0
P7.2	**TV UP**	TV value, up	TV value (up)	10 to 450	---	200
P7.3	**TV DN**	TV value, down	TV value (down)	10 to 450	---	200
P7.4	**Y-OFS UP**	Y offset, up	Y offset (up)	0.0 to 100.0	%	48.0
P7.5	**Y-OFS DN**	Y offset, down	Y offset (down)	0.0 to 100.0	%	48.0
P7.6	**TOL_BAND**	Tolerance band (zone)	Tolerance band (zone)	0.3 to 10.0	%	1.5
P7.7	**DEADBAND**	Deadband	Dead band	0.10 to 10.00	%	0.10
P7.8	**DB_APPR**	Deadband Approach	Dead-band approach	SLOW, MEDIUM, FAST		
P7.9	**TEST**	Test	Test	Function	---	INACTIVE
P7.10	**DB_CALC**	Deadband calculat.	Dead-band determination	ON, OFF	---	ON
P7.11	**LEAK_SEN**	Leakage sensivity	Leakage sensitivity	1 to 7200	S	30
P7.12	**CLOSE_UP**	Pos. time out	Position monitoring	0.0 to 100.0	%	30.0
P7.13	**EXIT**	Return	Return to operating level	Function	---	NV_SAVE

Parameter	Display	Function		Possible parameter setting	Unit	Factory setting
P8._	ANLG_OUT					
P8.0	MIN_RGE	Min. range	Min. current range	4.0 to 18.4	mA	4.0
P8.1	MAX_RGE	Max. range	Max. current range	20.0 to 5.7	mA	20.0
P8.2	ACTION	Action	Direction of action of characteristic curve	DIRECT, REVERSE	---	DIRECT
P8.3	ALARM	Alarm current	Alarm message	HIGH_CUR, LOW_CUR	---	HIGH_CUR
P8.4	RB_CHAR	Readback character.	Converted characters	DIRECT, RECALC		DIRECT
P8.5	TEST	Test	Test	Function	---	NONE
P8.6	ALR_ENAB	Alarm function enabled	Alarm via analog output	ON, OFF	---	ON
P8.7	CLIPPING	Current signal Signal clipping range	Extension of signal output to 3.8 to 20.5 mA	4.0 to 20.0; 3.8 to 20.5 mA	mA	4.0 bis 20.5
P8.8	EXIT	Return	Return to operating level	Function	---	---
P9._	DIG_OUT					
P9.0	ALRM_LOG	Alarm logic	Alarm output logic	ACTIVE_HI, ACTIVE_LO	---	ACTIVE_HI
P9.1	SW1_LOG	Switchpoint 1 logic	Logic SW1	ACTIVE_HI, ACTIVE_LO	---	ACTIVE_HI
P9.2	SW2_LOG	Switchpoint 2 logic	Logic SW2	ACTIVE_HI, ACTIVE_LO	---	ACTIVE_HI
P9.3	ALARM DO	Relay output	Relay output	ACTIVE/INACTIVE	—	INACTIVE
P9.4	TEST	Test	Test	Function	---	NONE
P9.5	EXIT	Return	Return to operating level	Function	---	NV_SAVE
P10._	DIG_IN					
P10.0	FUNCTION	Function select	Function selection	NONE, POS_0 %, POS_100 %, POS_HOLD	---	NONE
P10.1	EXIT	Return	Return to operating level	Function	---	---
P11._	FS / IP					
P11.0	FAIL_POS	Save position	Safe position	ACTIVE, INACTIVE	---	INACTIVE
P11.1	FACT_SET	Factory setting	Factory setting	Function	---	START
P11.2	IP-TYP	I/P module type	Type of I/P module	NO_F_POS,F_SAFE_1,F_SAFE_2, F_FREEZE1, F_FREEZE2	---	[CUSTOM]
P11.3*	IP_COMP	IP compensation	IP compensation	ON, OFF	---	ON
P11.4	HART_REV	HART® revision	HART® Revision	5; 7	---	5
P11.5	EXIT	Return	Return to operating level	Function	---	NV_SAVE

* Activation by ABB Service only

Note

For detailed information on the parameterization of the device, consult the associated configuration and parameterization instructions.

11 Diagnosis / error messages

Error codes

Error code	Possible cause	Impact	Troubleshooting the Instrument
ERROR 10	The supply voltage was interrupted for at least 20 ms. (This error is displayed after resetting the device to indicate the reason for the reset.)	–	Check the power source and the wiring.
ERROR 11	The supply voltage has fallen below the minimum voltage.	The actuator is moved to the safe position. After approx. 5 seconds, the positioner is automatically reset and starts up again with the message **ERROR 10**. If a local communication interface (LCI) is plugged in, the device will enter the operating mode LCI supply.	Check the power source and the wiring.
ERROR 12	The position is outside the measuring range. Possible reason is a malfunction in the position sensor.	**In control mode:** • The actuator is moved to the safe position. **On the configuration level:** • The output is set to neutral until a button is pressed. After approx. 5 seconds the positioner is automatically reset in control mode and on the configuration level.	Check the mounting.
ERROR 13	Invalid input current. This display indicates when the setpoint signal is overridden. The actuator is moved to the safe position.	–	Check the power source and the wiring.
ERROR 20	No access possible to the data in the EEPROM.	The actuator is moved to the safe position. After approx. 5 seconds, the positioner is automatically reset. Attempts are made to restore the data. This compensates for intermittent errors in the communication environment with the EEPROM.	If there is still no access to the EEPROM data after resetting the device, load the factory settings. If the error still persists, the device must be returned for repair to the manufacturer.

Error code	Possible cause	Impact	Troubleshooting the Instrument
ERROR 21	Error while processing the measured values, pointing to an error in the working data (RAM).	The actuator is moved to the safe position. After approx. 5 seconds, the positioner is automatically reset and the RAM is reinitialized.	If the error persists even after the positioner has been reset, the device will need to be returned to the manufacturer for repair.
ERROR 22	Error during the table processing, pointing to an error in the working data (RAM).	The actuator is moved to the safe position. After approx. 5 seconds, the positioner is automatically reset and the RAM is reinitialized.	If the error persists even after the positioner has been reset, the device will need to be returned to the manufacturer for repair.
ERROR 23	Error when verifying the checksum of the configuration data (RAM).	The actuator is moved to the safe position. After approx. 5 seconds, the positioner is automatically reset and the RAM is reinitialized.	If the error persists even after the positioner has been reset, the device will need to be returned to the manufacturer for repair.
ERROR 24	Error in the processor function registers (RAM).	The actuator is moved to the safe position. After approx. 5 seconds, the positioner is automatically reset and the RAM is reinitialized.	If the error persists even after the positioner has been reset, the device will need to be returned to the manufacturer for repair.
ERROR 50 ⋮ ERROR 99	Internal error.	The actuator is moved to the safe position. After approx. 5 seconds, the positioner is automatically reset.	If the error can be reproduced and occurs in the same position after resetting, the device must be returned for repair to the manufacturer.

... 11 Diagnosis / error messages

Alarm codes

Alarm code	Possible cause	Impact	Troubleshooting the Instrument
ALARM 1	Leakage between positioner and actuator	Depending on how well the leakage can be compensated, small control actions are required at regular intervals.	Check the piping.
ALARM 2	The setpoint current is outside the permissible range, i.e. it is < 3.8 mA or > 20.5 mA.	–	Check the power source.
ALARM 3	Alarm of the zero monitor. The zero position has shifted by more than 4%.	– In control mode, a position outside the valve range can only be reached by moving to the limit stops, as the setpoint is limited from 0 to 100 %	Correct the mounting.
ALARM 4	Controlling is inactive, because the device does not operate in control mode or the binary input is active.	The controller does not follow the setpoint.	Switch to control mode or switch off the binary input.
ALARM 5	Positioning timed out. The settling time needed exceeds the configured stroke time.	None, or adaptive control is performed (in adaptive mode).	Ensure that • the actuator is not blocked. • the supply air pressure is adequately high. • the specified time limit is higher than 1.5 times the longest stroke time of the actuator. If adaption cannot run uninterruptedly for an actuator, adaption should be switched on until the alarm does not occur anymore during controlling actions.
ALARM 6	The defined limit value for the stroke counter has been exceeded.	–	Reset the counter (only possible via a connected PC with suitable software).
ALARM 7	The specified limit value for the travel counter has been exceeded.	–	Reset the counter (only possible via a connected PC with suitable software).

Message codes

Message codes	Message description
BREAK	Action stopped by operator.
CALC_ERR	Error during plausibility check.
COMPLETE	Action completed, acknowledgment required.
EEPR_ERR	Memory error, data could not be saved.
FAIL_POS	Safe position is active, action cannot be executed.
NO_F_POS	Safe position required, but not active.
NO_SCALE	Valve range limits have not yet been determined; therefore, partial Autoadjust cannot be run.
NV_SAVE	Data is saved in the non-volatile memory.
OUTOFRNG	Measuring range is exceeded, Auto Adjust was automatically stopped.
LOAD	Data (factory settings) are being loaded.
RNG_ERR	Less than 10 % of the measuring range is used.
RUN	Action running.
STMUL	Simulation has been started externally from a PC via HART® protocol; switch outputs, alarm output and analog position feedback are no longer influenced by the process.
SPR_ERR	Actual spring action is different from the adjusted one.
TIMEOUT	Time-out; parameter could not be determined within two minutes; Autoadjust was automatically stopped.

12 Maintenance

The positioner does not require any maintenance if it is used as intended under normal operating conditions.

Note
Manipulation by users shall immediately render the warranty for the device invalid.
To ensure fault-free operation, it is essential that the device is supplied with instrument air that is free of oil, water, and dust.

13 Repair

Safety instructions

⚠ DANGER

Explosion hazard
Explosion hazard due to improper repair of the device.
- Faulty devices may not be repaired by the operator.
- The device may only be repaired by the ABB Service Department.

Repair and maintenance activities may only be performed by authorized customer service personnel.
When replacing or repairing individual components, use original spare parts.

Returning devices

Use the original packaging or a secure transport container of an appropriate type if you need to return the device for repair or recalibration purposes.
Fill out the return form (see **Return form** on page 59) and include this with the device.
In accordance with the EU Directive governing hazardous materials, the owner of hazardous waste is responsible for its disposal or must observe the following regulations for shipping purposes:
All devices delivered to ABB must be free from any hazardous materials (acids, alkalis, solvents, etc.).

Please contact Customer Center Service acc. to page 5 for nearest service location.

14 Recycling and disposal

Note

Products that are marked with the adjacent symbol may **not** be disposed of as unsorted municipal waste (domestic waste).
They should be disposed of through separate collection of electric and electronic devices.

This product and its packaging are manufactured from materials that can be recycled by specialist recycling companies.

Bear the following points in mind when disposing of them:
- As of 8/15/2018, this product will be under the open scope of the WEEE Directive 2012/19/EU and relevant national laws (for example, ElektroG - Electrical Equipment Act - in Germany).
- The product must be supplied to a specialist recycling company. Do not use municipal waste collection points. These may be used for privately used products only in accordance with WEEE Directive 2012/19/EU.
- If there is no possibility to dispose of the old equipment properly, our Service can take care of its pick-up and disposal for a fee.

15 Additional documents

Note
All documentation, declarations of conformity, approvals, certificates and additional documentation are available in the ABB download area.
www.abb.com/positioners

Trademarks

HART is a registered trademark of FieldComm Group, Austin, Texas, USA

16 Appendix

Return form

Statement on the contamination of devices and components
Repair and/or maintenance work will only be performed on devices and components if a statement form has been completed and submitted.
Otherwise, the device/component returned may be rejected. This statement form may only be completed and signed by authorized specialist personnel employed by the operator.

Customer details:

Company:

Address:

Contact person: Telephone:

Fax: Email:

Device details:

Type: Serial no.:

Reason for the return/description of the defect:

Was this device used in conjunction with substances which pose a threat or risk to health?

☐ Yes ☐ No

If yes, which type of contamination (please place an X next to the applicable items):

☐ biological	☐ corrosive / irritating	☐ combustible (highly / extremely combustible)
☐ toxic	☐ explosive	☐ other toxic substances
☐ radioactive		

Which substances have come into contact with the device?

1.

2.

3.

We hereby state that the devices/components shipped have been cleaned and are free from any dangerous or poisonous substances.

Town/city, date Signature and company stamp

—

ABB Measurement & Analytics

For your local ABB contact, visit:
www.abb.com/contacts

For more product information, visit:
www.abb.com/positioners

—
We reserve the right to make technical changes or modify the contents of this document without prior notice. With regard to purchase orders, the agreed particulars shall prevail.
ABB does not accept any responsibility whatsoever for potential errors or possible lack of information in this document.

We reserve all rights in this document and in the subject matter and illustrations contained therein. Any reproduction, disclosure to third parties or utilization of its contents – in whole or in parts – is forbidden without prior written consent of ABB.

© ABB 2023

3KXE341201R4201

OI/TZIDC-EN Rev. E 09.2023