INSTRUCTION HANDBOOK

1SDH002297A1001 - ECN000285442

TMAX XT XT5 THERMOMAGNETIC

Disassembly instructions

1. SCOPE

Scope of this document is to illustrate the step-by-step disassembly process of ABB SACE Tmax XT XT5 moulded case circuit breaker equipped with a thermomagnetic trip unit.
Document is focused on Tmax XT XT5 3p IEC version, anyway it allows to cover other versions of Tmax XT XT5 circuit breaker equipped with a thermomagnetic trip unit with just few slight differences to be taken into account.

2. SAFETY NOTES

Before proceeding with any disassembly operation, it's mandatory to put the circuit breaker in open position.
Disassembly operations of circuit breakers must be performed by qualified and skilled personnel in the electrical field (IEV 195-04-01: person with relevant education and experience to enable him or her to perceive risks and to avoid hazards which electricity can create) and having a detailed knowledge of circuit breakers.
Disassembly activites must be performed in an ergonomic workspace able to ensure protection of persons demanded to perform disassembly activities.
Applicable national legislation and international standards in force at the time of disassembly of circuit breakers must be taken into account in addition to prescriptions illustrated in this document.
ABB declines any responsibility for injury to people or damage to property resulting from a failure to comply with the instructions set out in this document and with any applicable safety standard.

3. PERSONAL PROTECTIVE EQUIMENT (PPE)

When performing disassembly, following safety Personal Protective Equipment (PPE) must be worn:

Gloves

Glasses

Safety shoes

Protective clothes

4. TOOLS

Disassembly operations require the use of tools (e.g. screwdriver, torx key, pliers, …); tools to be used are specified inside each phase of the disassembly process (see Chapter 6).

5. SEPARATE TREATMENT

Table below lists parts requiring a separate treatment adding information about part location inside circuit breakers and related quantity.

Description	Position inside circuit breaker	Quantity
Cap kits	In correspondence of circuit breaker connection terminals	6
UVR rod	Mounted on the breaking part cover	1
Test lever	Mounted on the breaking part cover	1
Left hand lever adapter	Mounted on the breaking part cover	1
RC lever release	Mounted on the breaking part cover	1
RC lever support	Mounted on the breaking part cover	1
Right hand open/close AUX adapter	Mounted on the breaking part cover	1
Toggle extention	Mounted on the toggle	1
Toggle protection	Mounted on the toggle	1
Operating mechanism	Mounted on the central pole	1
Plugs	Mounted on the trip unit	3
Trimmers	Mounted on the trip unit	2
Tripping rod	Mounted on the trip unit	1
Rod	Mounted on the trip unit	1

If disassembled parts require a separate treatment a specific indication is provided inside each phase with reason why for the separate treatment (see Chapter 6).

6. DISASSEMBLY PROCESS

Circuit breakers disassembly process is constituted by a sequence of operations to be performed on products after their dismounting from original installation. For each phase following information are provided:

- Part/parts to be disassembled (title of the phase)
- Tools to be used
- Description of actions to be performed
- Pictures showing actions to be performed
- List, quantity and picture of disassembled parts with an indication about separate treatment (when applicable)
- In case of potential hazards signal below is reported

6.1 PHASE 1 – CAP KITS

Tools

Allen key

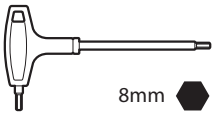

Flat screwdriver

Actions to be performed

1
By means of the allen key remove the screws connected with the cap kits.

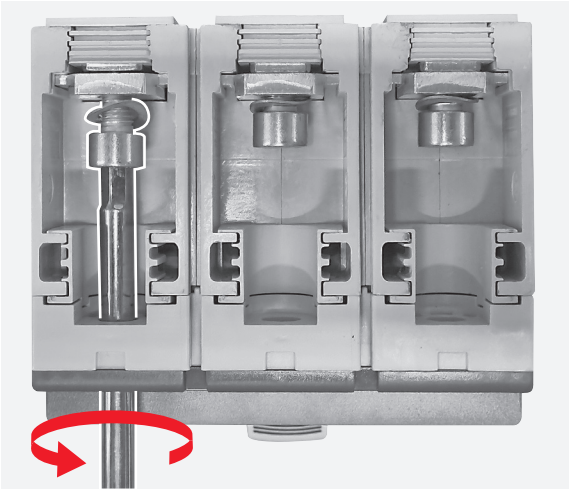

2
Insert the flat screwdriver as shown in Picture 2 and unhook the cap kits from circuit breaker main structure.

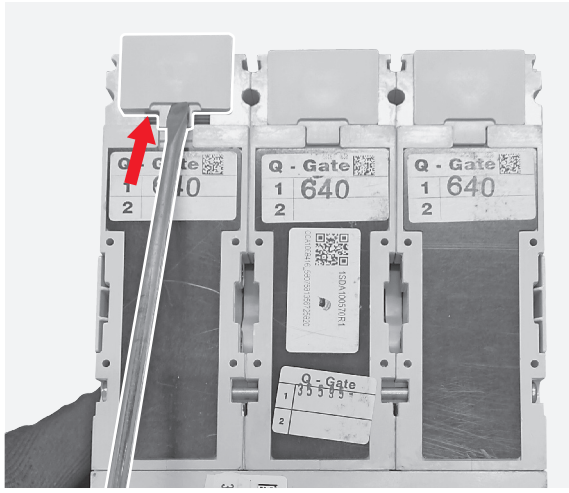

3
Manually separate the cap kits and their nuts from circuit breaker main structure.

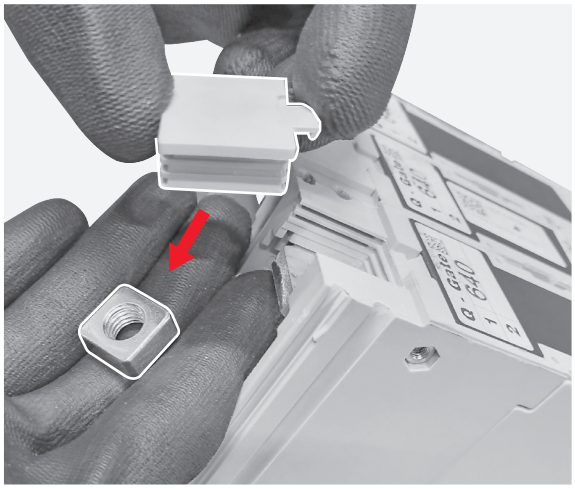

Disassembled parts

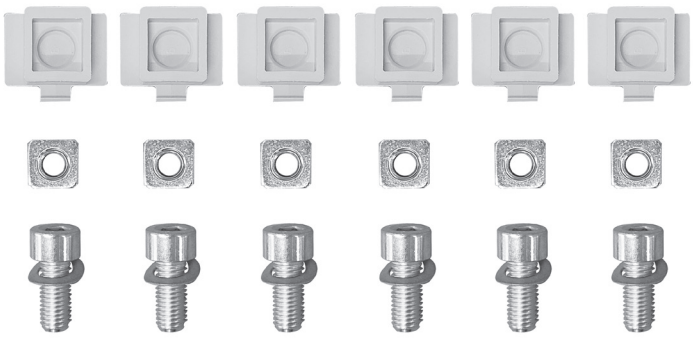

- 6 screws and related washers (Metal)
- 6 nuts (Metal)
- 6 cap kits (Plastic) SEPARATE TREATMENT (Thermoplastics containing brominated flame retardants)

6.2 PHASE 2 – FRONTAL

Tools

Cross screwdriver

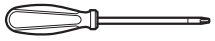

Flat screwdriver

Actions to be performed

4

Manually close the circuit breaker and by means of the cross screwdriver push the test button in order to bring the circuit breaker in trip position.

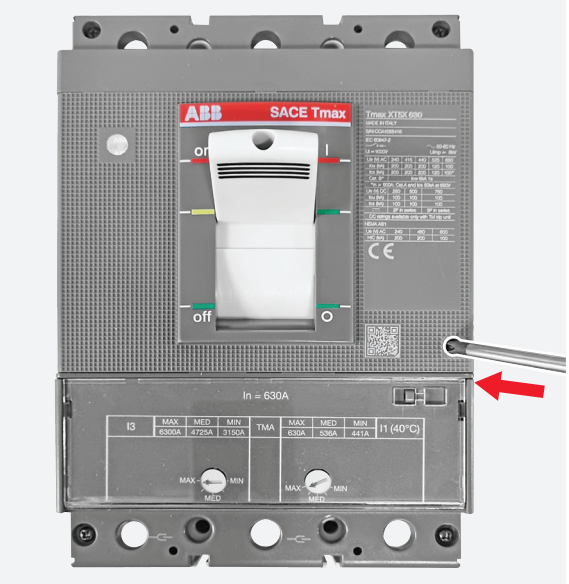

5

Insert the flat screwdriver as shown in the picture and slightly push the screwdriver as shown by the arrow in order to raise up and to unhook the aesthetic front cover from circuit breaker main structure.

6

Manually remove the aesthetic front cover.

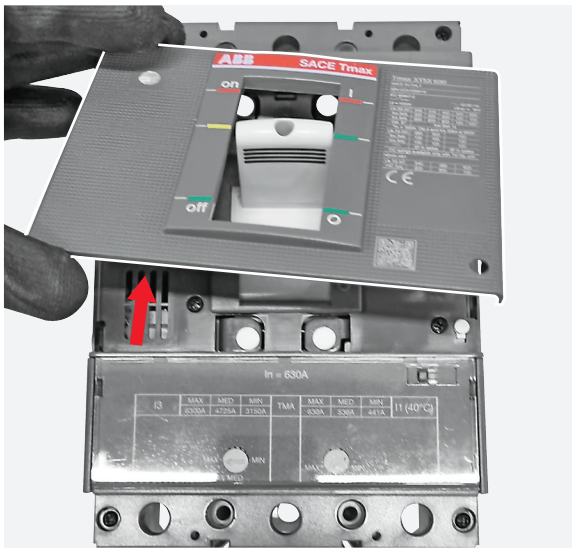

7

By means of the cross screwdriver unscrew the 4 screws fixing the front cover to the circuit breaker main structure.

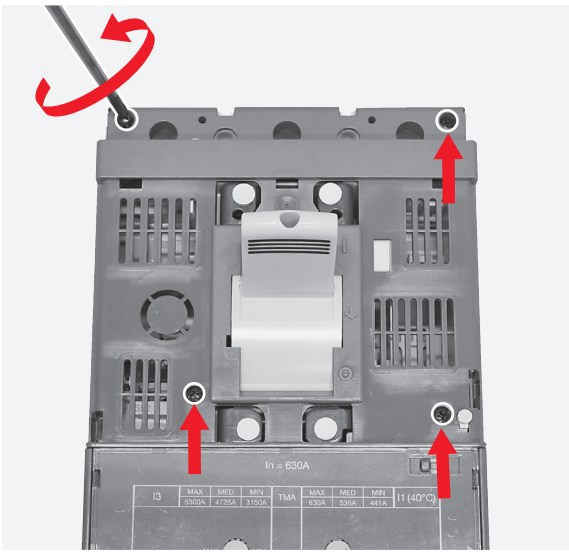

8

Manually remove the front cover.

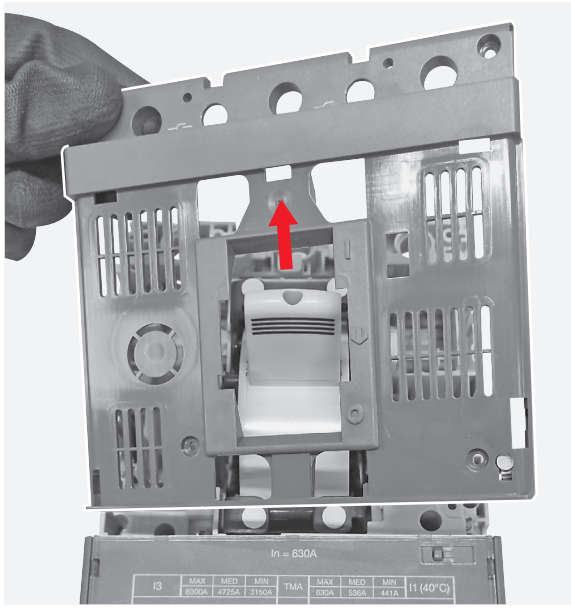

Disassembled parts

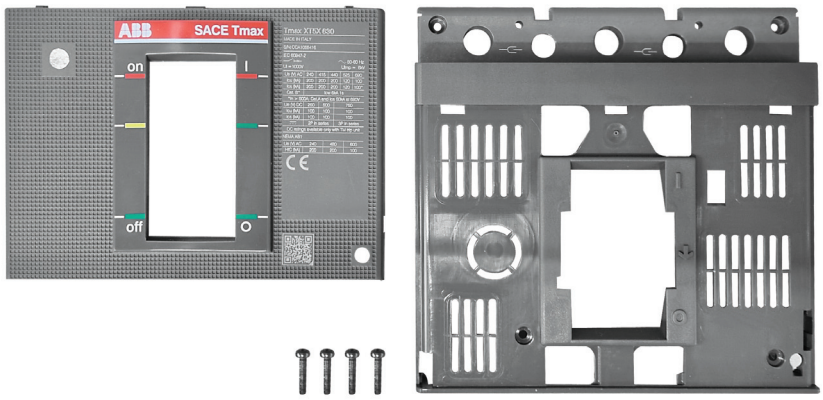

- 1 aesthetic front cover (Plastic)
- 4 screws (Metal)
- 1 front cover (Plastic)

6.3 PHASE 3 – TRIP UNIT

Tools

Allen key

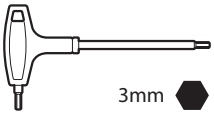

Torx key

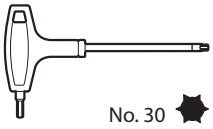

Actions to be performed

9

By means of the torx key unscrew the 3 screws fixing the trip unit to the breaking part.

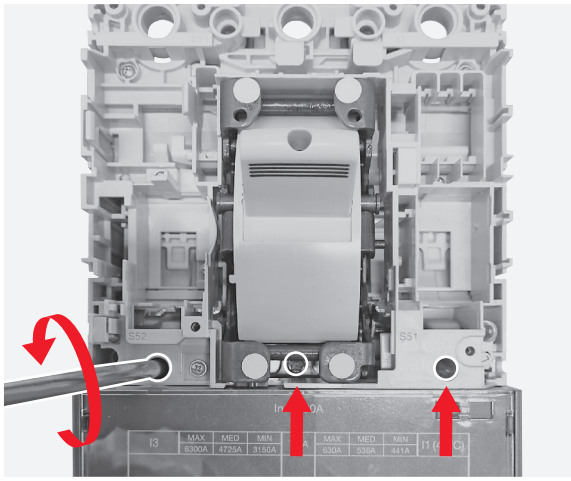

10

By means of the allen key unscrew the 4 screws located in the bottom part of the circuit breaker fixing the trip unit to the breaking part.

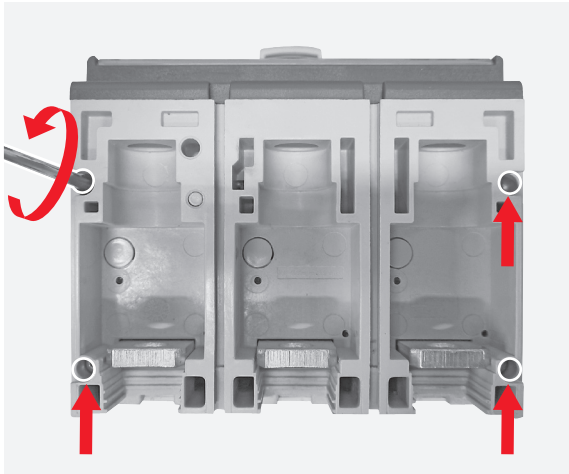

11

Manually remove the trip unit from the breaking part.

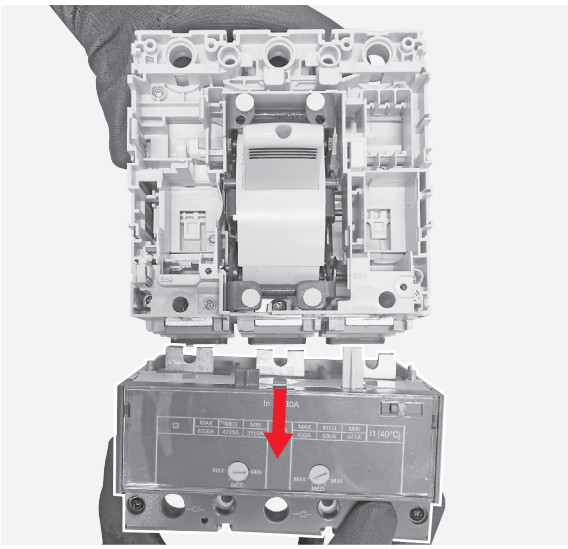

Disassembled parts

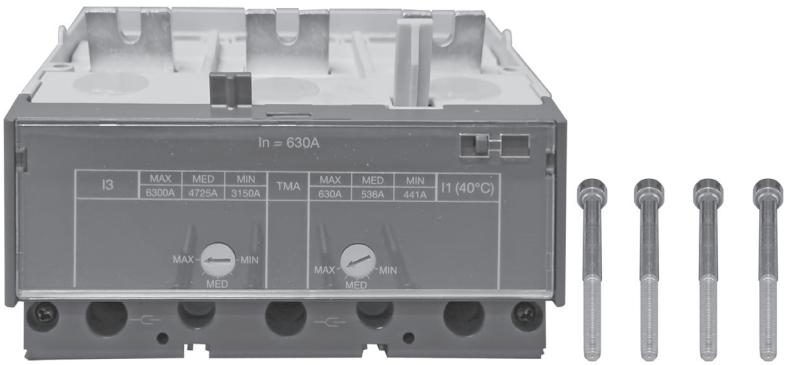

- 4 screws (Metal)
- 1 trip unit (Plastic and Metal) *

*Trip unit will be furtherly disassembled (see Phases 6.7 and 6.8)

6.4 PHASE 4 – BREAKING PART COVER

Tools

Cutter

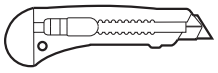

Cross screwdriver

Pliers

Flat screwdriver

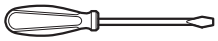

Actions to be performed

12
By means of the cutter start removing the label on the left side of the breaking part and manually complete the operation.

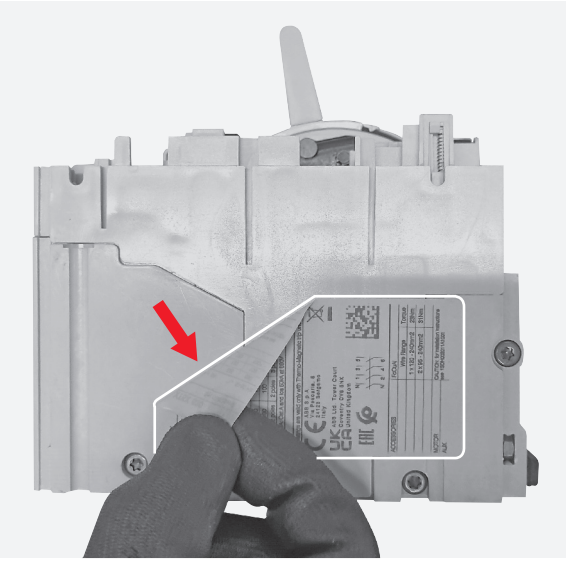

13
By means of the cross screwdriver unscrew the 8 screws fixing the breaking part cover to breaking part main structure.

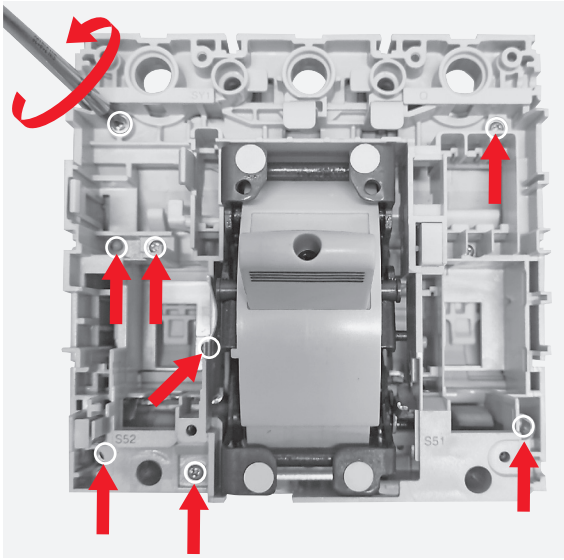

14
Manually remove the breaking part cover from the breaking part main structure.

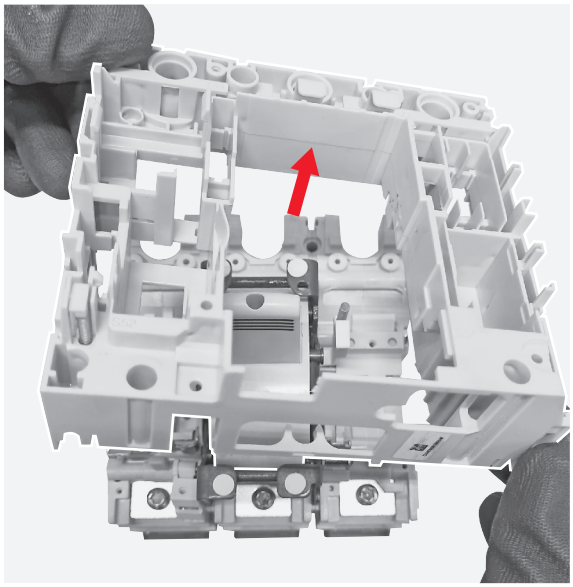

15
By means of the pliers remove the 2 nuts mounted on the breaking part cover.

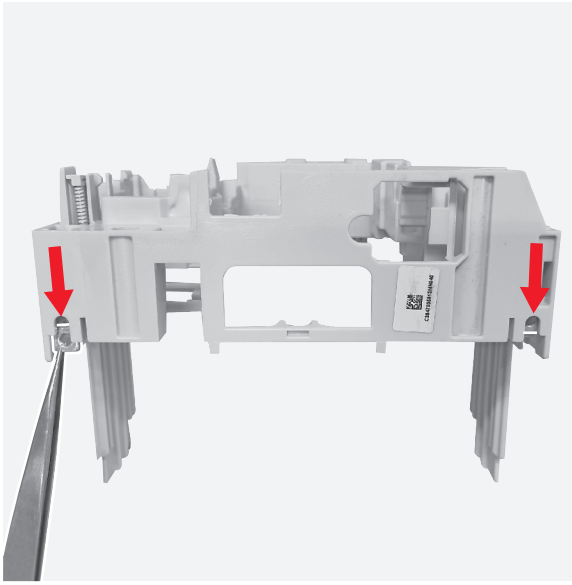

16
By means of the pliers remove the UVR rod mounted on the breaking part cover.

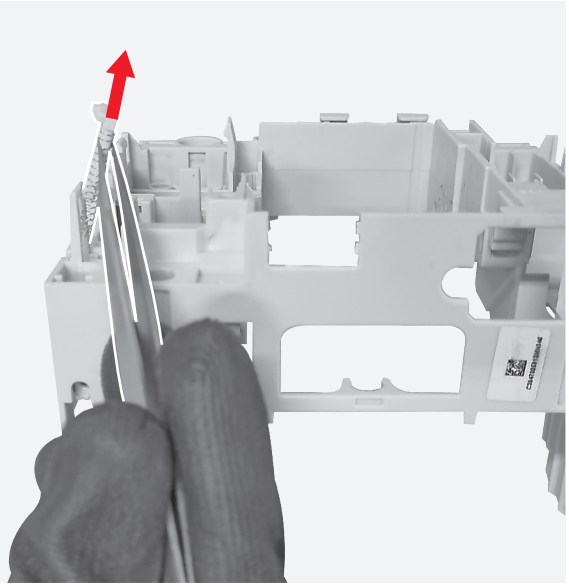

17
Manually separate the spring from the UVR rod.

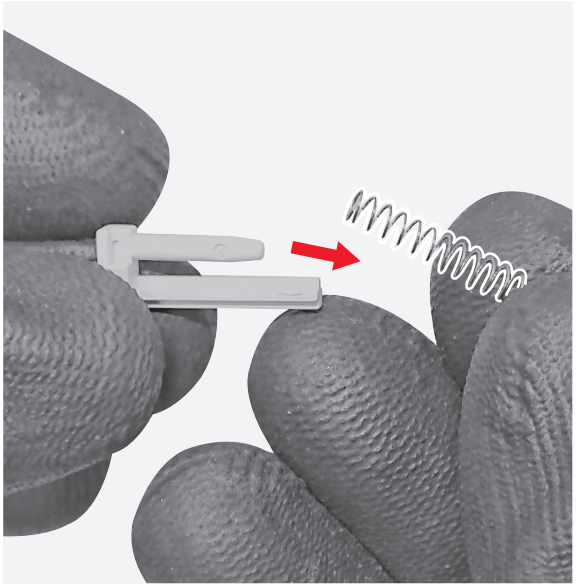

18
By means of the flat screwdriver turn the test lever until it comes out from its housing.

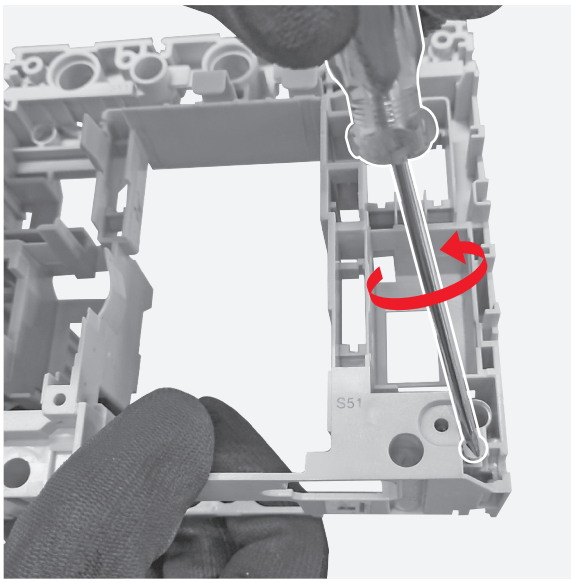

19
Manually remove the trip test button and separate the spring from test lever.

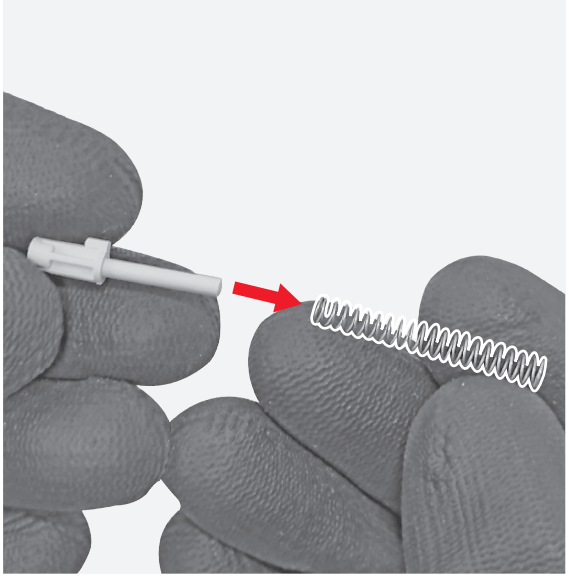

20

Manually remove the lever SX assembly and the RC group release located on the left part of the breaking part.

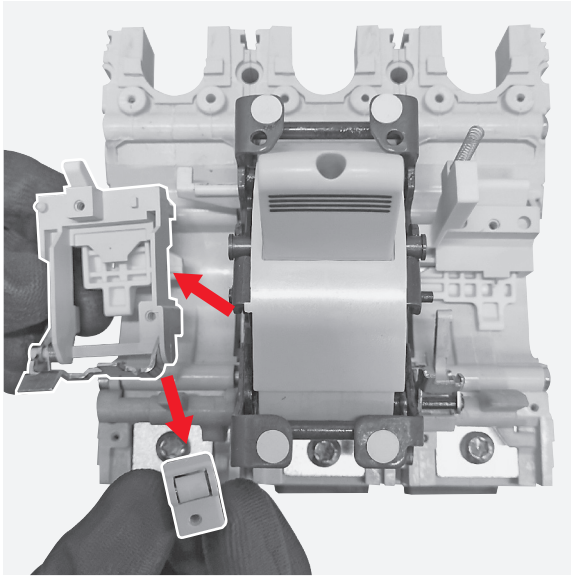

21

Manually separate the S52 lever and the spring from the lever SX assembly.

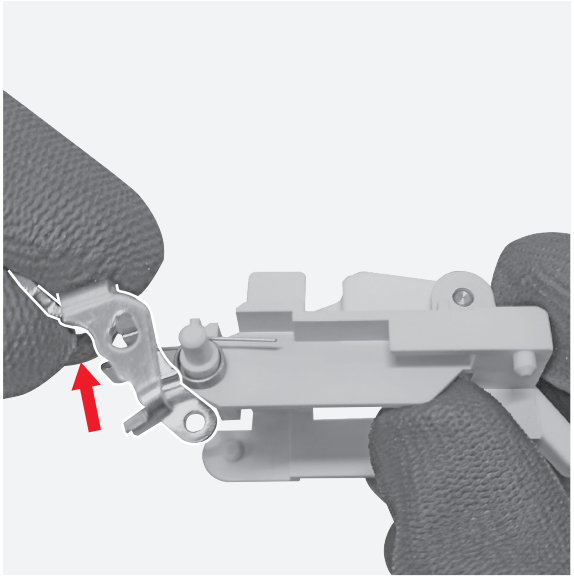

22

By means of the flat screwdriver push the pin as indicated by the arrow and after manually remove the pin.

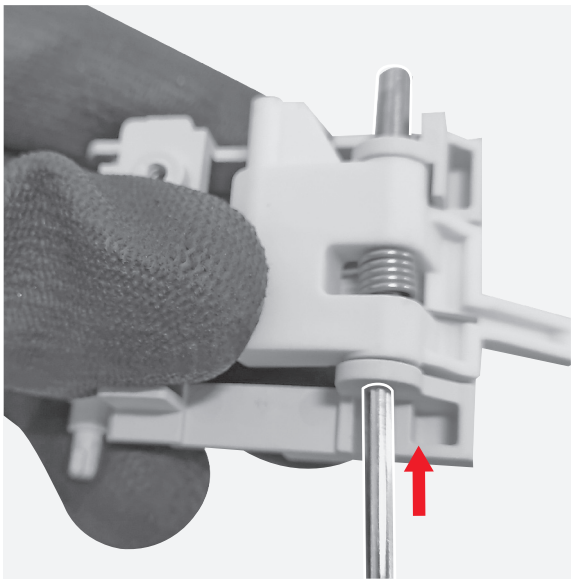

23

Manually separate the left open/close lever, the spring and the left hand lever adapter.

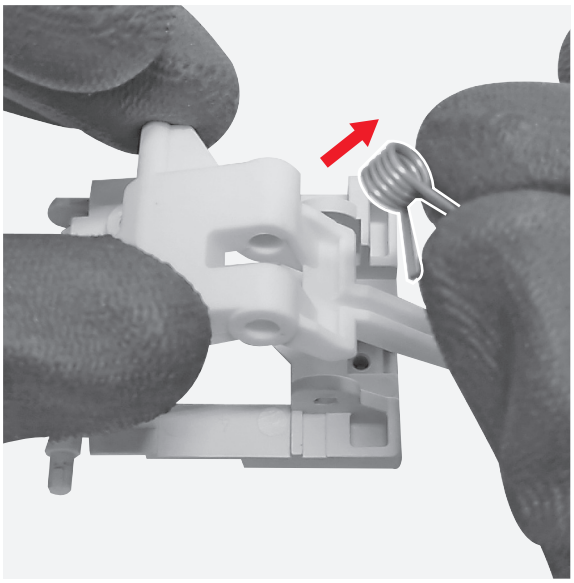

24
By means of the pliers remove the benzing mounted on the RC group release.

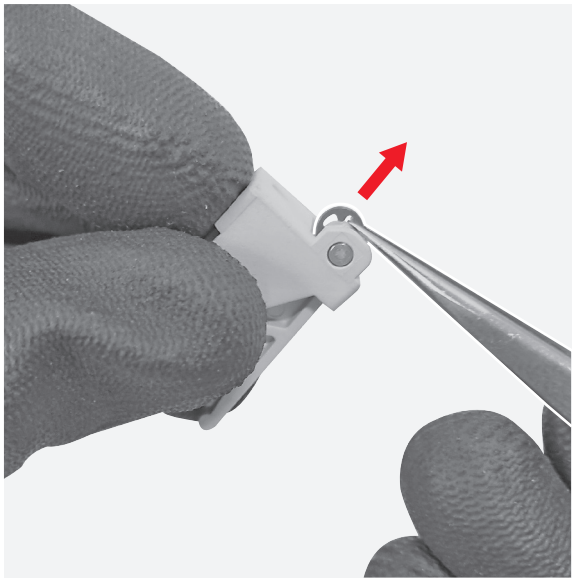

25
Manually separate the pin, RC lever release and the RC lever support.

26
Manually remove the lever DX assembly located on the right part of the breaking part.

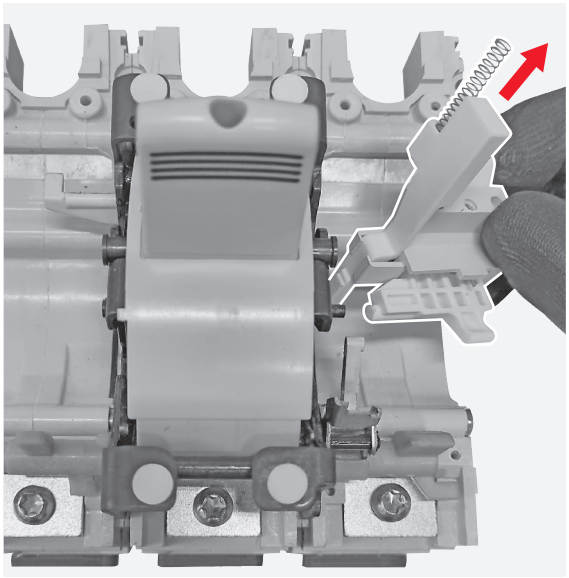

27
Manually separate the MOE rod indicator and the related spring from the lever DX assembly.

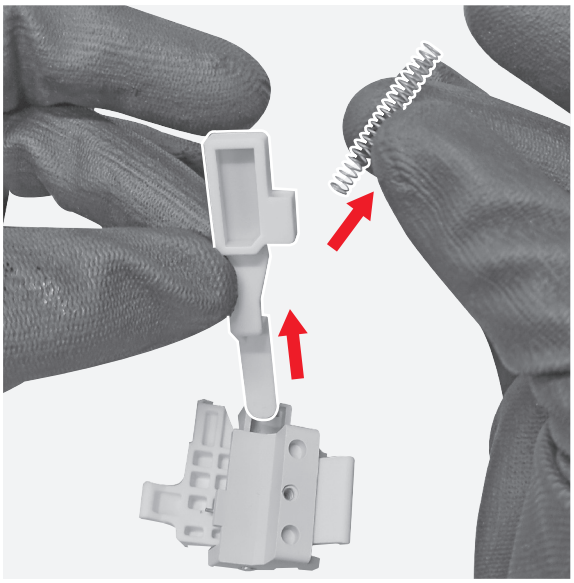

28

By means of the flat screwdriver push the pin as indicated by the arrow and after manually remove the pin.

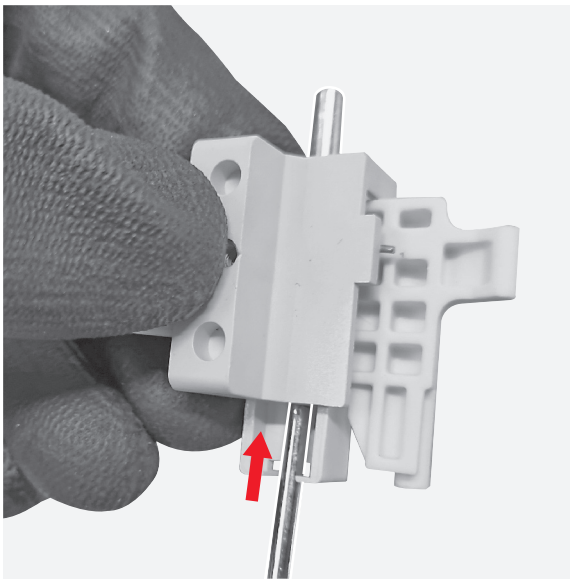

29

Manually separate the right hand open/close AUX adapter, the open/close AUX lever and the spring.

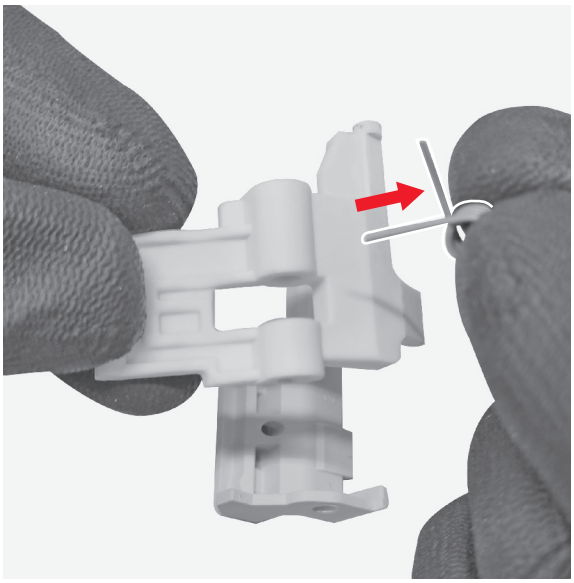

Disassembled parts

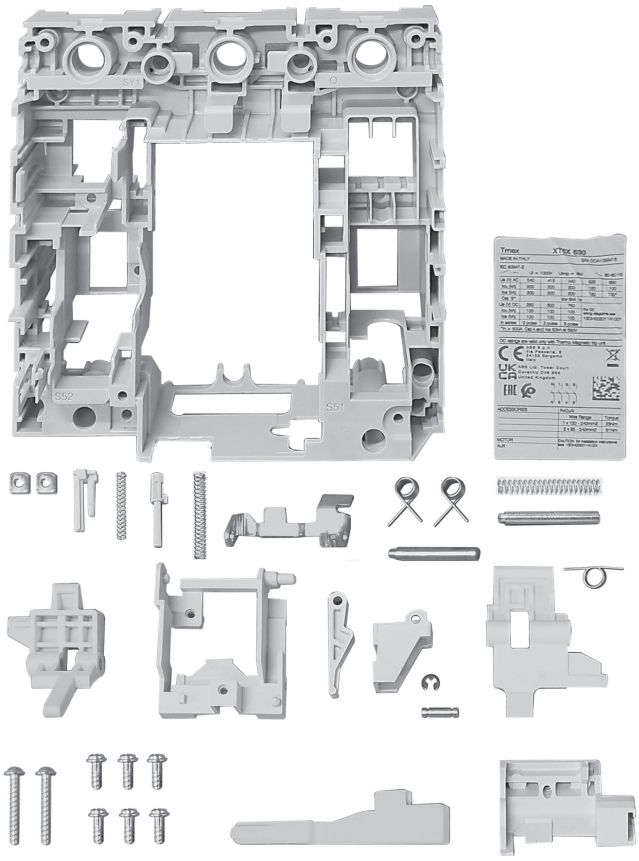

- 1 label (Adhesive paper)
- 8 screws (Metal)
- 2 nuts (Metal)
- 1 UVR rod (Plastic) SEPARATE TREATMENT (Thermoplastics containing brominated flame retardants)
- 1 + 1 + 1 + 1 + 1 springs (Metal)
- 1 test lever (Plastic) SEPARATE TREATMENT (Thermoplastics containing brominated flame retardants)
- 1 S52 lever (Metal)
- 1 + 1 + 1 pins (Metal)
- 1 left open/close lever (Plastic)
- 1 left hand lever adapter (Plastic) SEPARATE TREATMENT (Thermoplastics containing brominated flame retardants)
- 1 benzing (Metal)
- 1 RC lever release (Plastic) SEPARATE TREATMENT (Thermoplastics containing brominated flame retardants)
- 1 RC lever support (Plastic) SEPARATE TREATMENT (Thermoplastics containing brominated flame retardants)
- 1 MOE rod indicator (Plastic)
- 1 right hand open/close AUX adapter (Plastic) SEPARATE TREATMENT (Thermoplastics containing brominated flame retardants)
- 1 open/close AUX lever (Plastic)
- 1 circuit breaker cover (Plastic)

6.5 PHASE 5 – POLES SEPARATION AND OPERATING MECHANISM

Tools

Cross screwdriver

Torx key

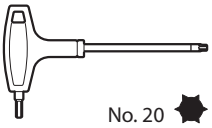

Actions to be performed

30

By means of the torx key unscrew the 5 screws keeping connected the poles of the breaking part.

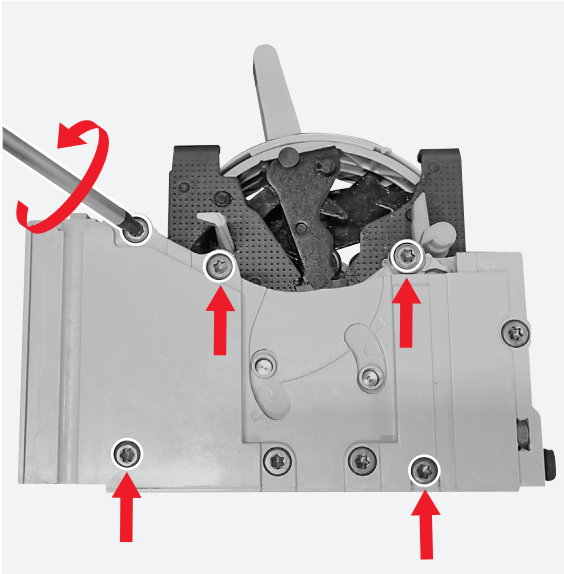

31

Manually remove the 5 screws and the related inserts.

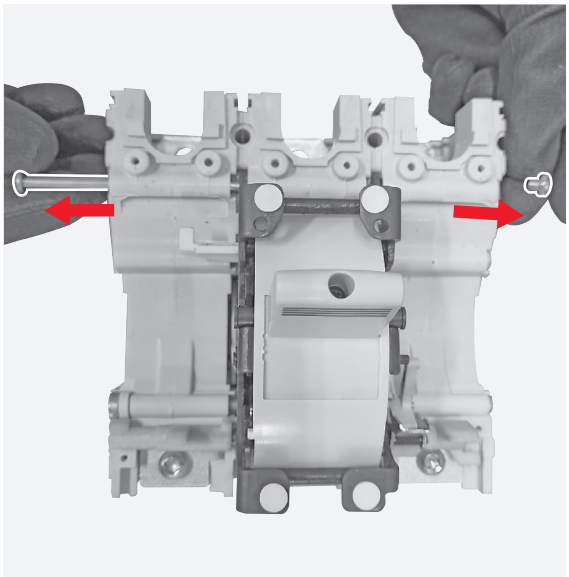

32

Manually separate the poles.

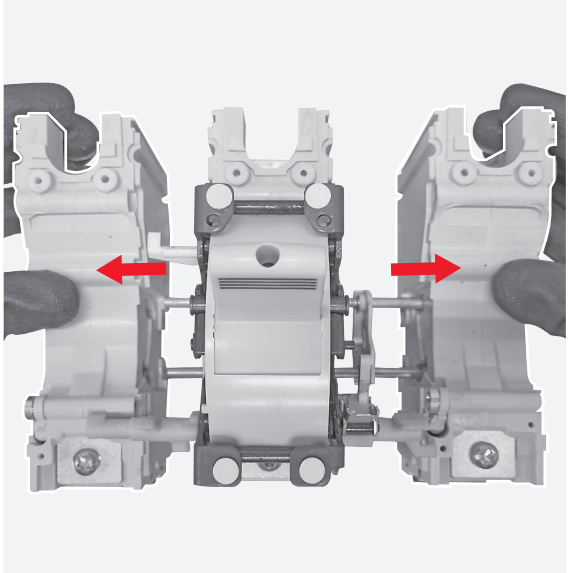

33

Manually remove the 2 pins and the 2 signalling devices from the central pole.

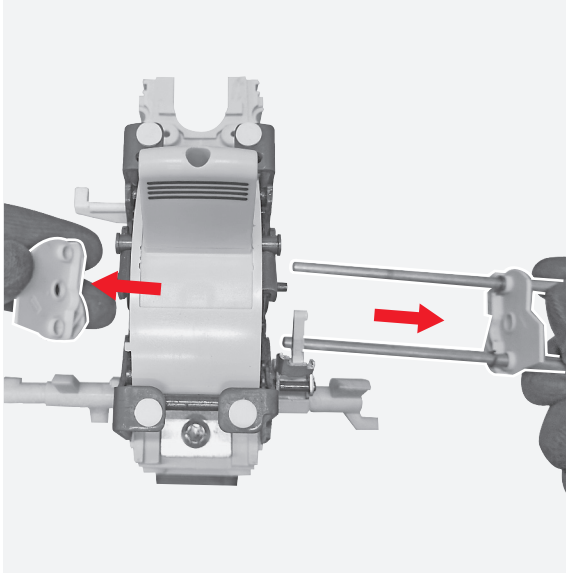

34

Manually remove the operating mechanism from the central pole.

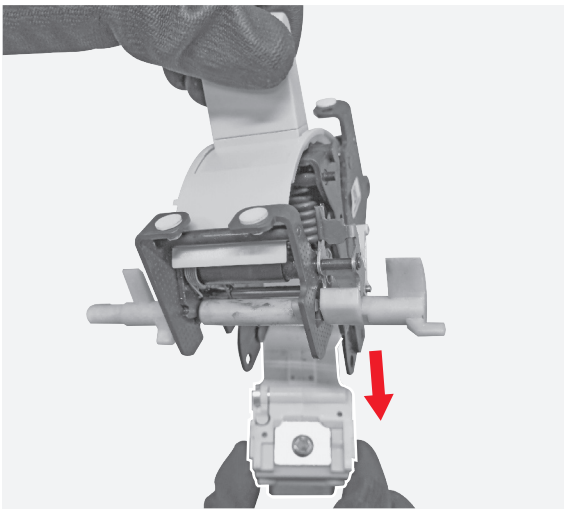

35

By means of the cross screwdriver unscrew the screw fixing the toggle extension to the base of the toggle.

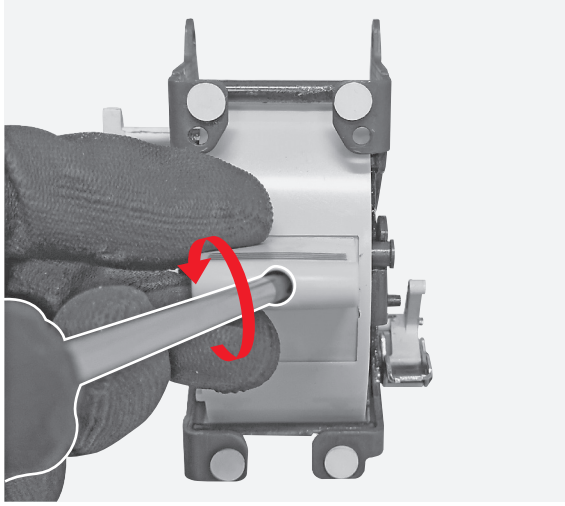

36

Manually remove the toggle extension and the toggle protection.

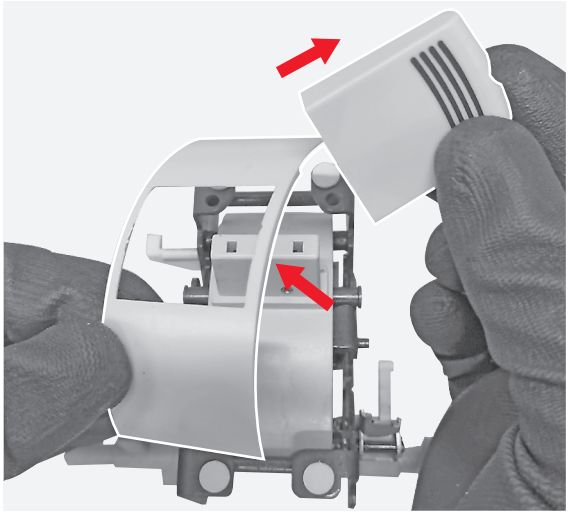

Disassembled parts

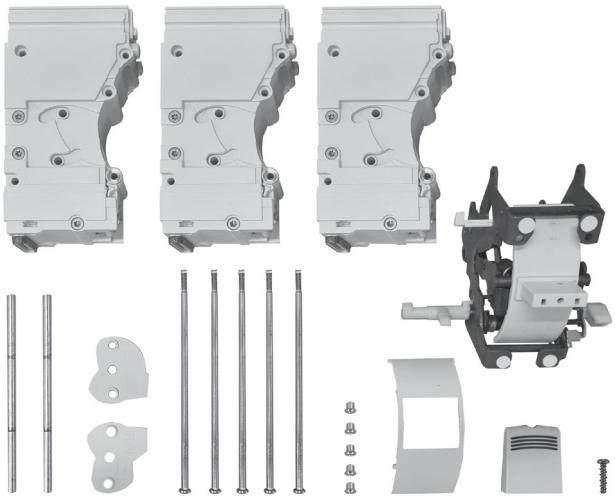

- 5 + 1 screws (Metal)
- 5 inserts (Metal)
- 2 pins (Metal)
- 2 signalling devices (Plastic)
- 1 toggle extension (Plastic and Rubber) SEPARATE TREATMENT (Thermoplastics containing brominated flame retardants)
- 1 toggle protection (Plastic) SEPARATE TREATMENT (Thermoplastics containing brominated flame retardants)
- 1 operating mechanism (Plastic and Metal) SEPARATE TREATMENT (Thermoplastics containing brominated flame retardants)
- 3 poles (Plastic and Metal) *

*Poles will be furtherly disassembled (see Phase 6.6)

6.6 PHASE 6 – POLES

Tools

Pliers

Flat screwdriver

Cross screwdriver

Torx key

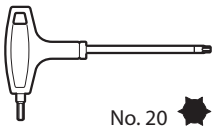

Actions to be performed

37

Manually remove the insert and the I3 lever.

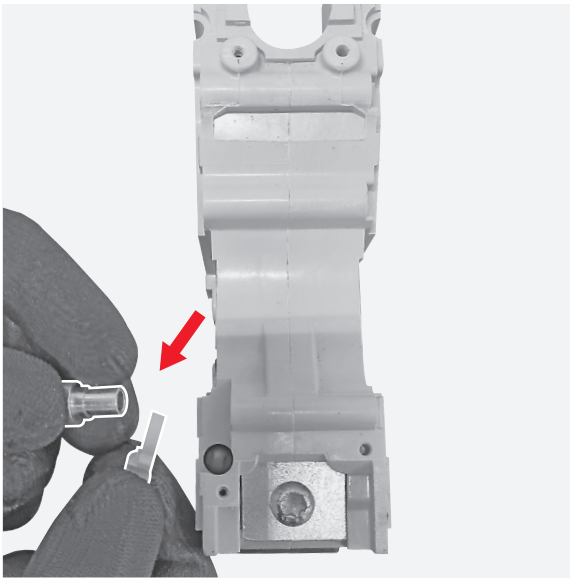

38

By gravity let the pin fall down from the pole.

39

By means of the pliers remove the silicone sheath located in the bottom part of the pole.

40

By means of the pliers remove the nut located in the bottom part of the pole.*

*Applicable to lateral poles only

41

By means of the flat screwdriver unhook the rear protection from the pole and after manually complete the removal operation.

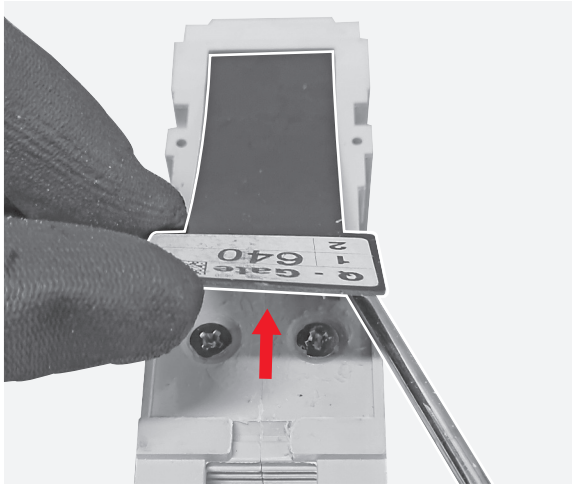

42

By means of the cross screwdriver unscrew the 2 screws located in the rear part of the pole.

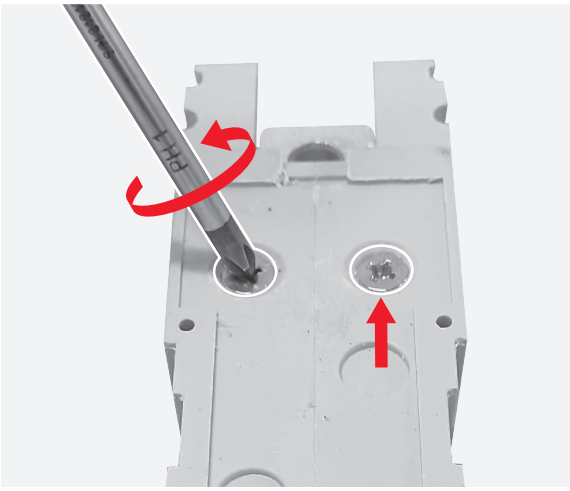

43

By means of the torx key unscrew the 3 screws located on the side of the pole.

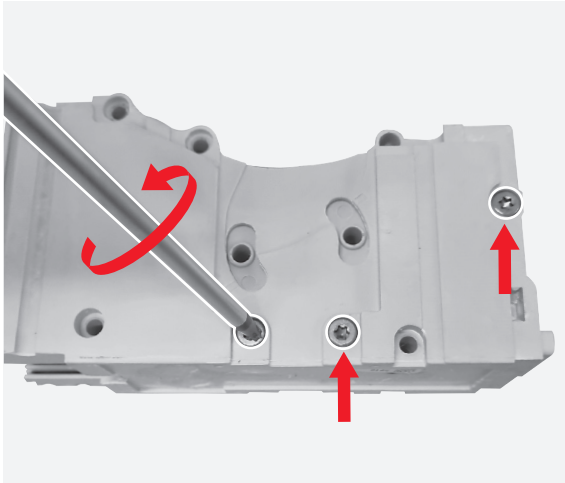

44

Manually remove the 3 screws and the related short screws.

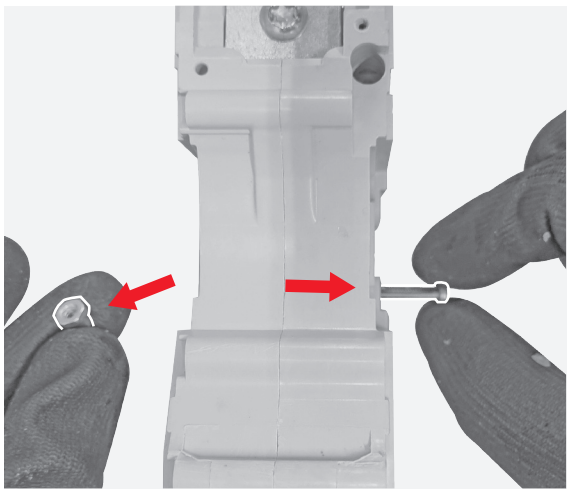

45

Manually separate the let and the right shells.

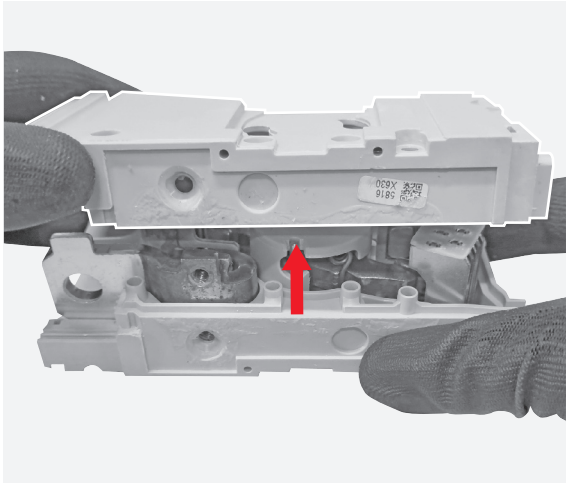

46

Manually remove the terminal protection.

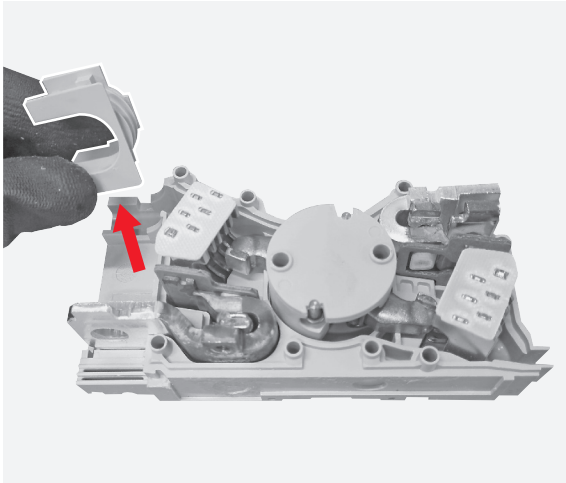

47
Manually remove the arching chambers.

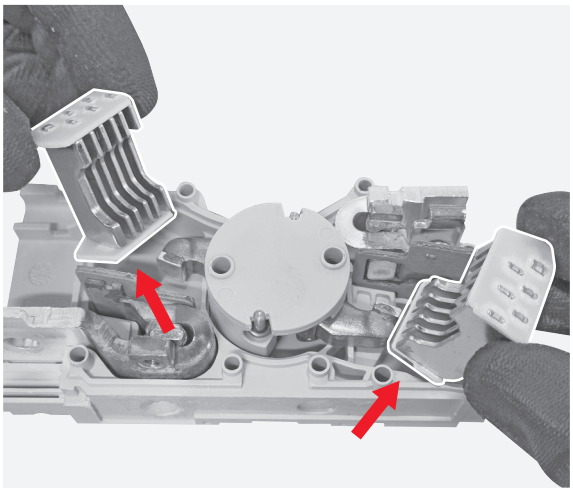

48
Manually remove upper and lower fixed contacts.

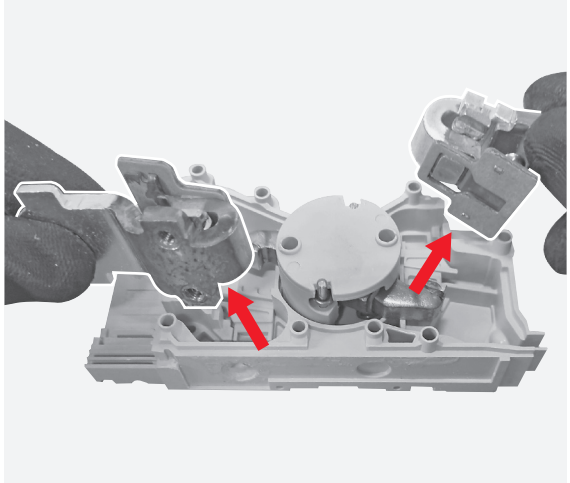

49
By means of the flat screwdriver remove the arc quenching from the fixed contacts.

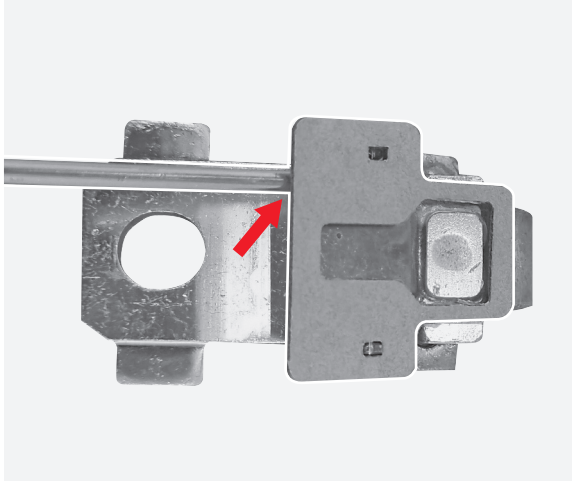

50
Manually remove the moving contact assembly.

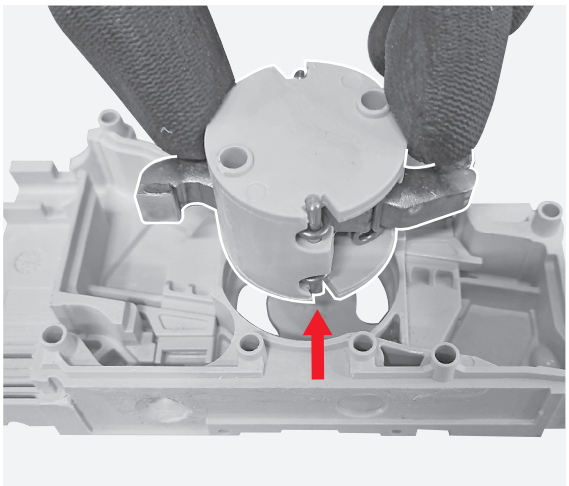

51
By means of the flat screwdriver push the 2 pins as indicated by the arrovw.

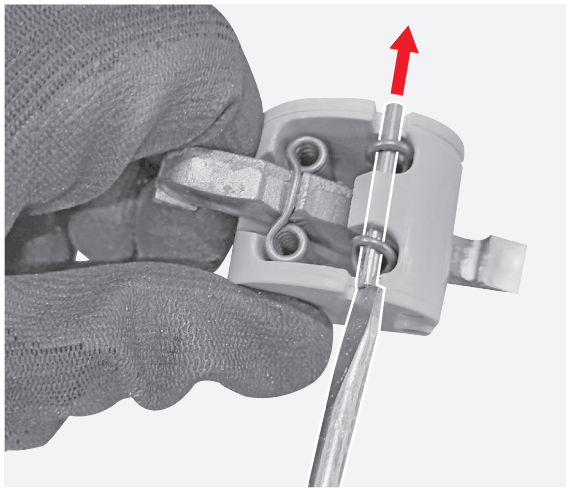

52
Manually remove the 2 pins.

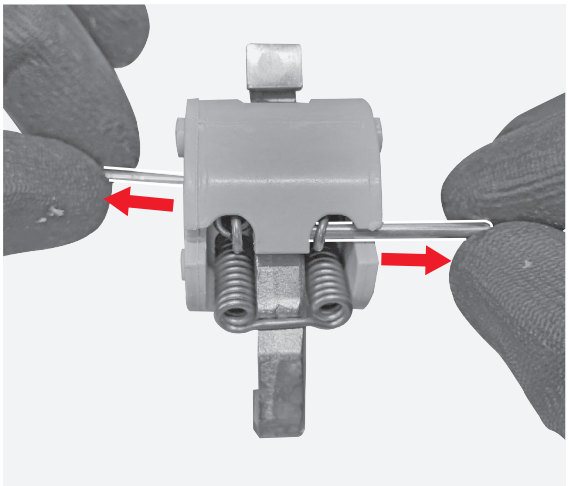

53

Manually separate the moving contact from its shaft.

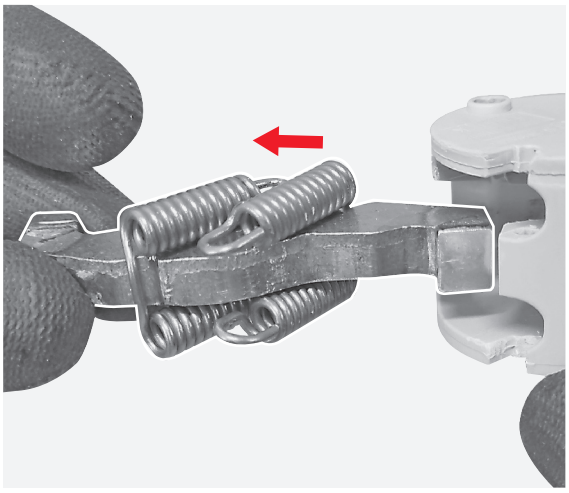

Disassembly operations illustrated at pictures from 37 to 53 must be performed on the other 2 poles.

Disassembled parts

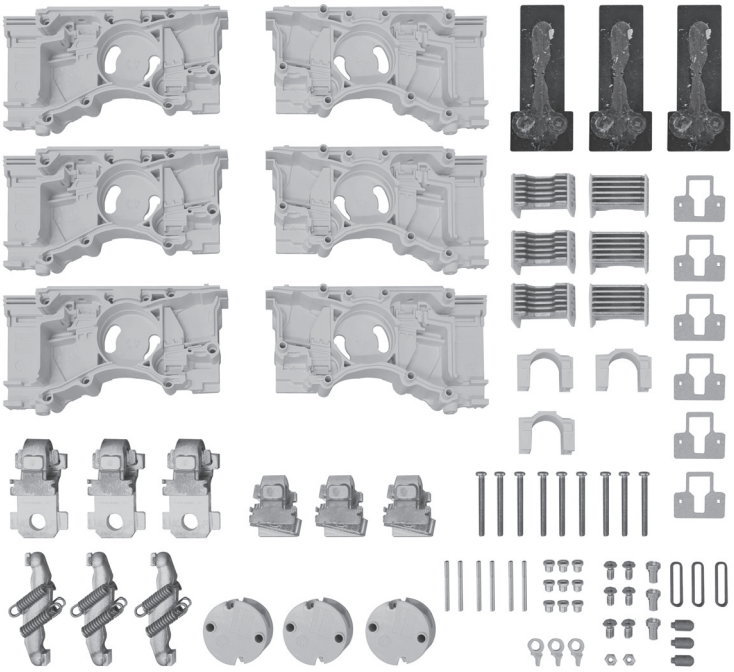

- 3 inserts (Metal)
- 2 nuts (Metal)
- 3 I3 levers (Plastic)
- 3 pins (Plastic)
- 3 silicone sheath (Silicone)
- 3 rear protection (Plastic)
- 6 + 9 screws (Metal)
- 9 short screws (Metal)
- 3 left shells (Plastic)
- 3 right shells (Plastic)
- 3 terminal protections (Plastic)
- 6 arching chambers (Metal and GP0-3)
- 6 fixed contacts (Metal)
- 6 arc quenchings (Vulcanized fiber)
- 6 pins (Metal)
- 3 moving contacts (Metal)
- 3 shafts (Plastic)

6.7 PHASE 7 – TRIP UNIT FRONTAL

Tools

Cutter

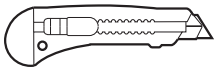

Cross screwdriver

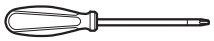

Actions to be performed

54

Manually disassemble the transparent protection from the trip unit frontal.

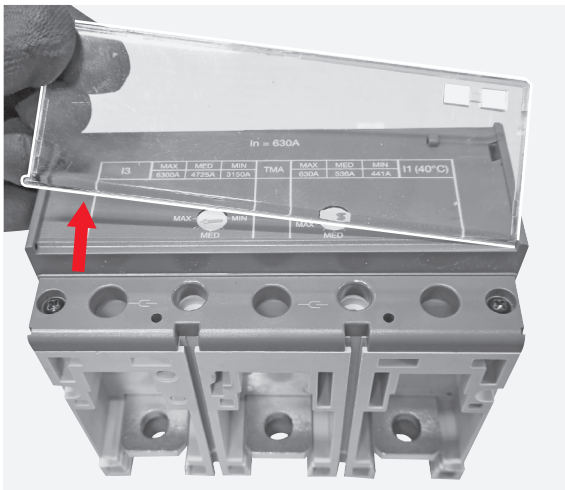

55

By means of the cutter start removing the label located on the trip unit frontal and manually complete the operation.

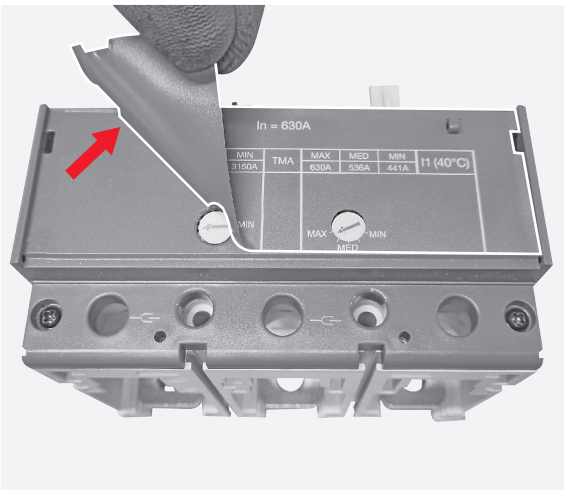

56

By means of the cross screwdriver unscrew the 2 screws fixing the trip unit frontal to the trip unit main structure.

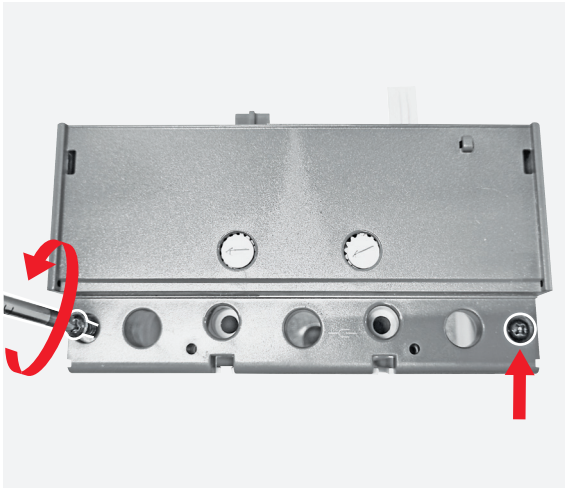

57

Manually remove the trip unit frontal.

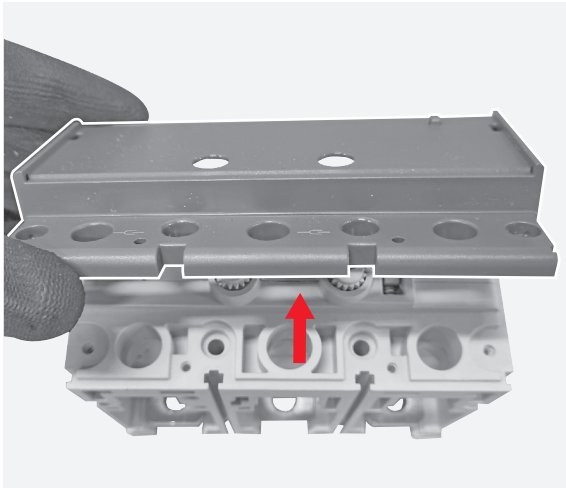

Disassembled parts

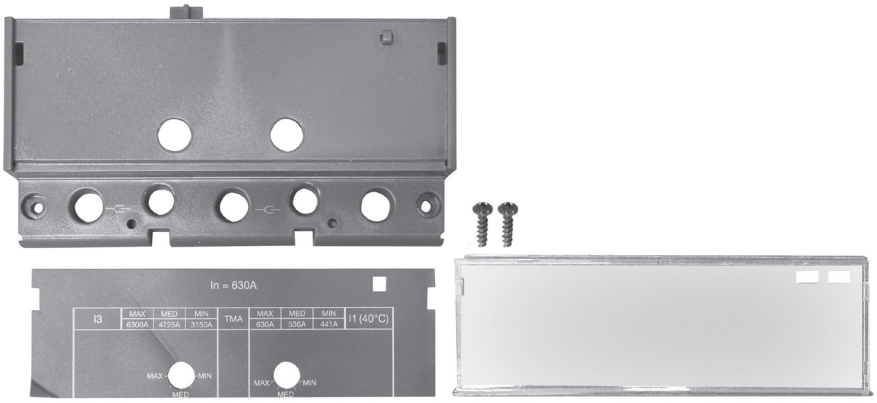

- 1 trip unit transparent protection (Plastic)
- 1 label (Adhesive paper)
- 2 screws (Metal)
- 1 trip unit frontal (Plastic)

6.8 PHASE 8 – TRIP UNIT MAIN STRUCTURE

Tools

Torx key

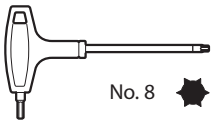

Pliers

Flat screwdriver

Cross screwdriver

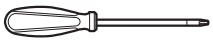

Actions to be performed

58

By means of the torx key unscrew the 4 screws fixing the trip unit cover to the trip unit main structure.

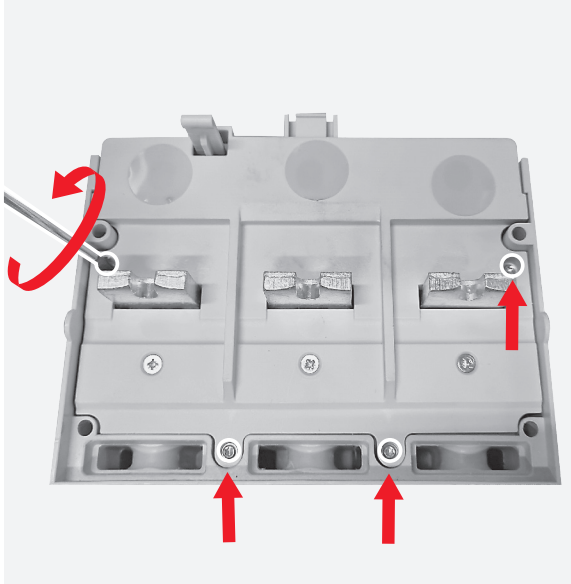

59

By means of the torx key unscrew the screw located on the front of the trip unit main structure fixing the trip unit cover to the trip unit main structure.

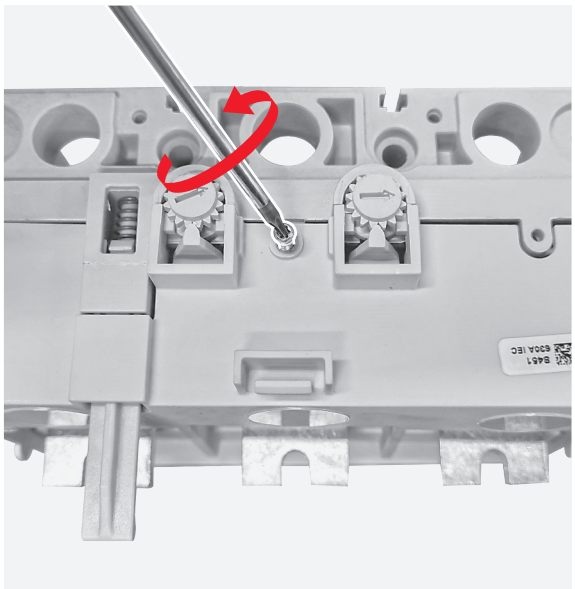

60

Manually remove the trip unit cover.

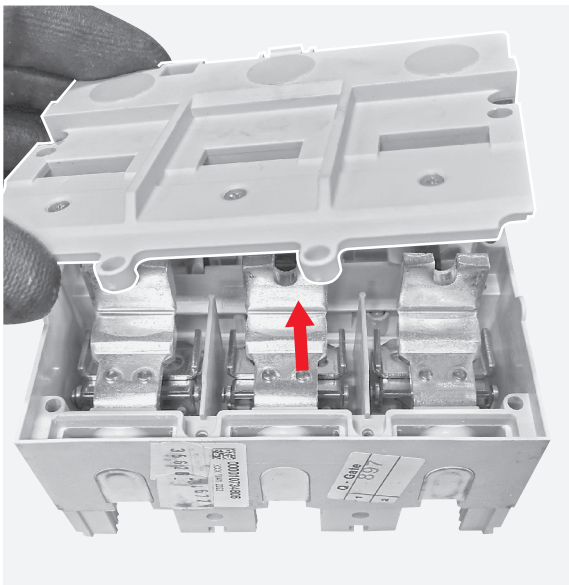

61

By means of the cross screwdriver unscrew the 3 screws located on the trip unit cover.

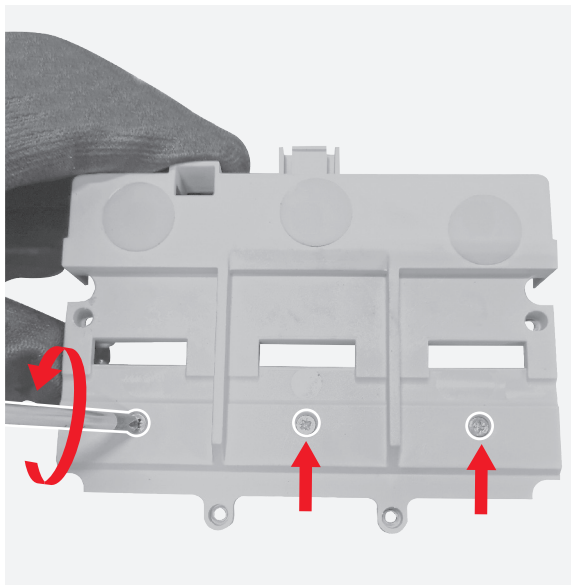

62

By gravity let the 3 fixed cores separate from the trip unit cover.

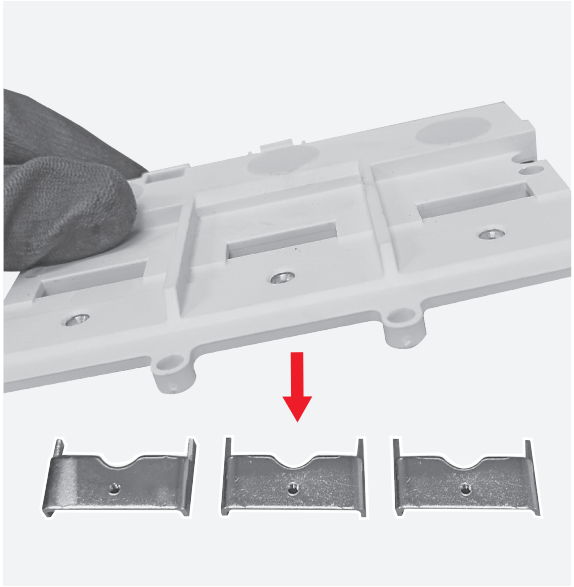

63

By means of the flat screwdriver remove the 3 plugs located in the rear part of the trip unit.

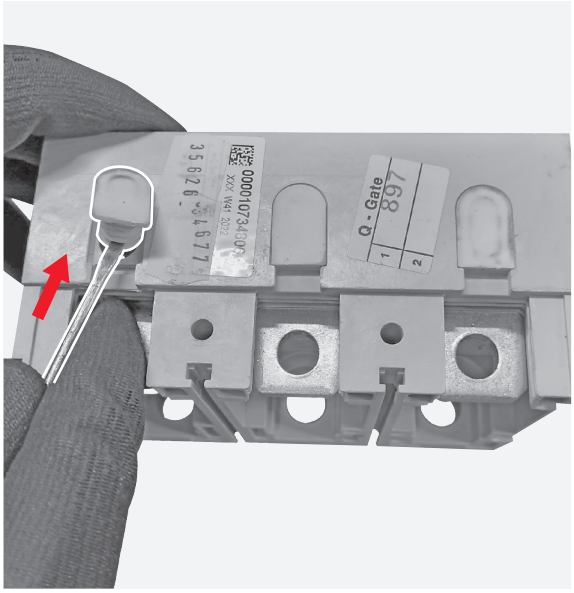

64

By means of the cross screwdriver remove the 6 screws located behind the plugs removed at previous step.

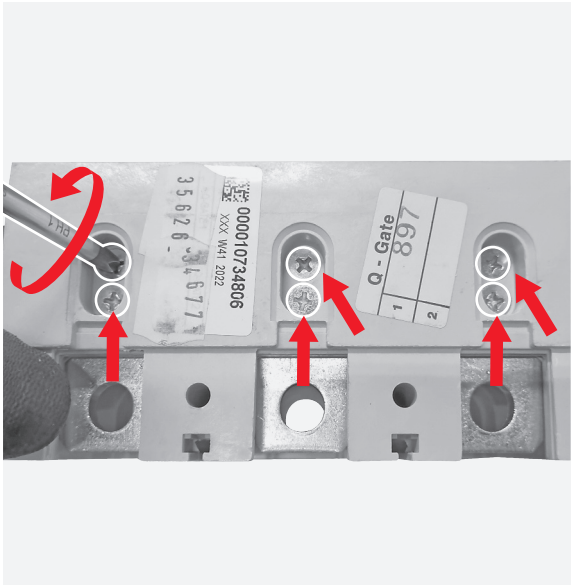

65

Manually remove the 3 thermal groups and the 3 spacers.

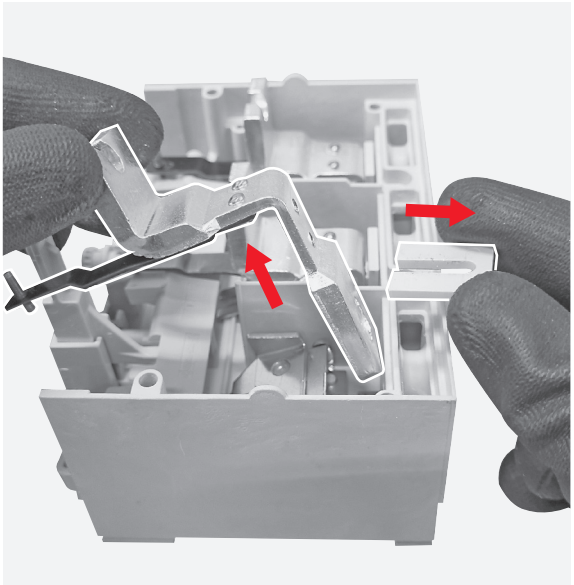

66

Manually remove the shaft and by means of the pliers remove the spring mounted in the trip unit.

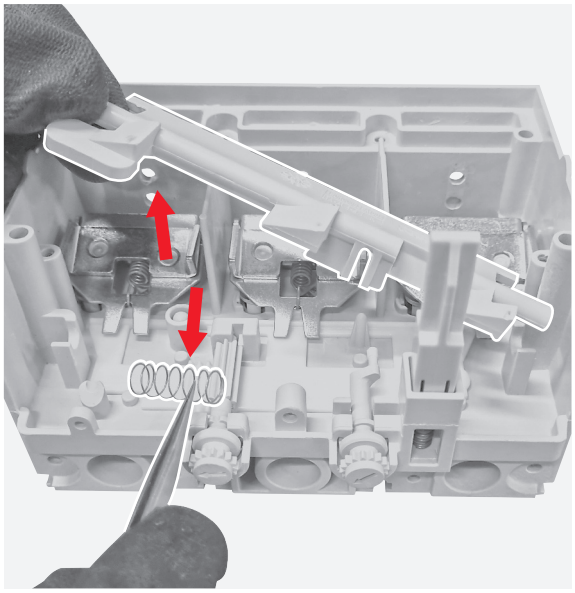

67

Manually remove the 2 trimmers.

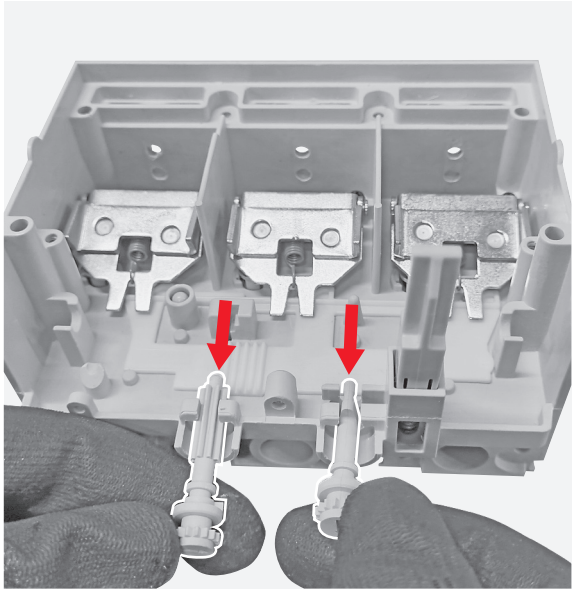

68

Manually remove the tripping rod located in the front right part of the trip unit and the spring connected with the tripping rod.

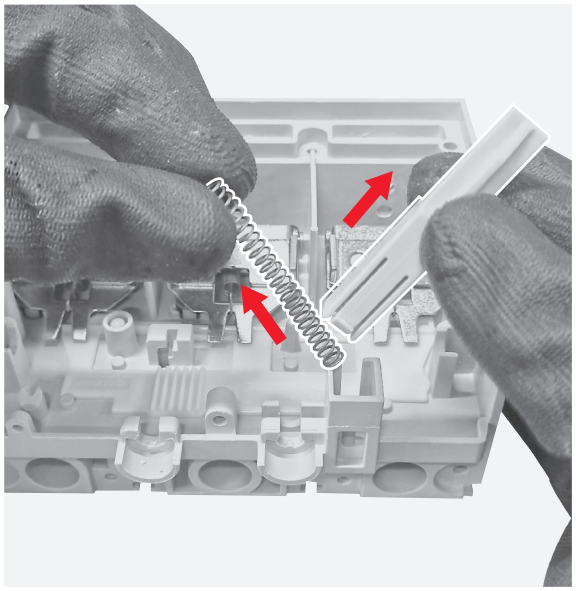

69

By means of the cross screwdriver unscrew the screws mounted on the magnetic groups.

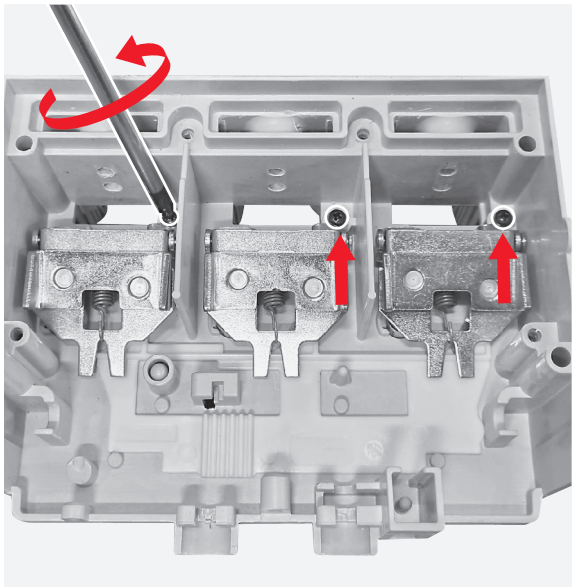

70

Manually lift the cover of the magnetic groups.

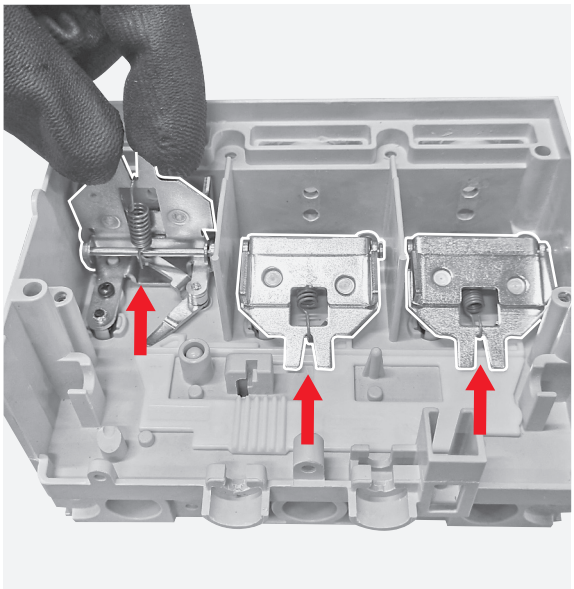

71

By means of the cross screwdriver unscrew the screws mounted on the magnetic groups.

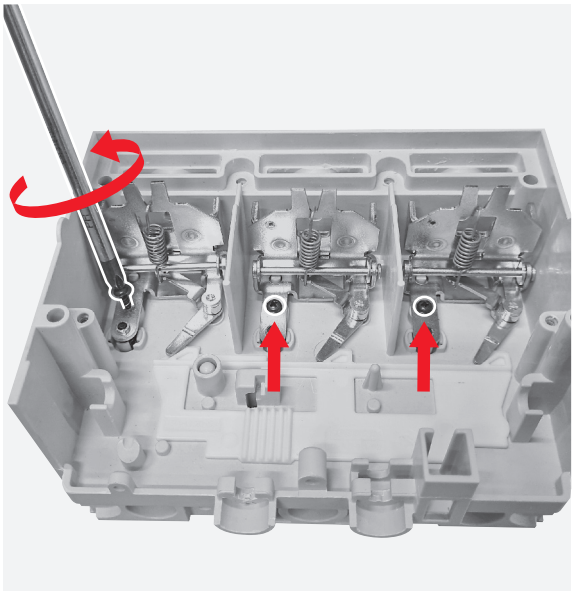

72

Manually remove the 3 magnetic groups from the trip unit.

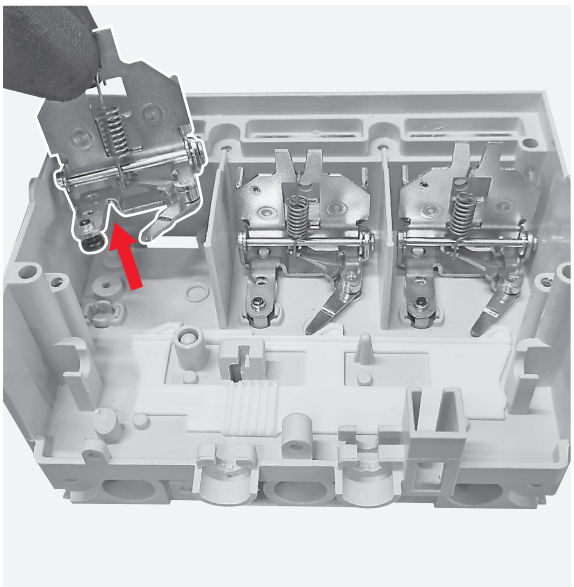

73

By gravity let the magnetic slide and the rod separate from the trip unit case.

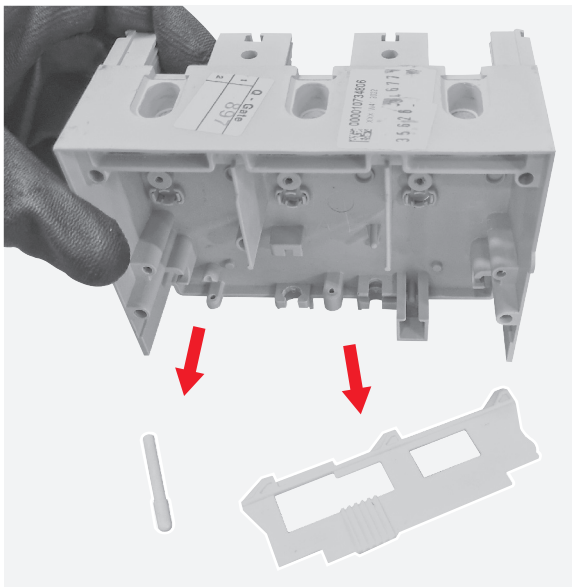

Disassembled parts

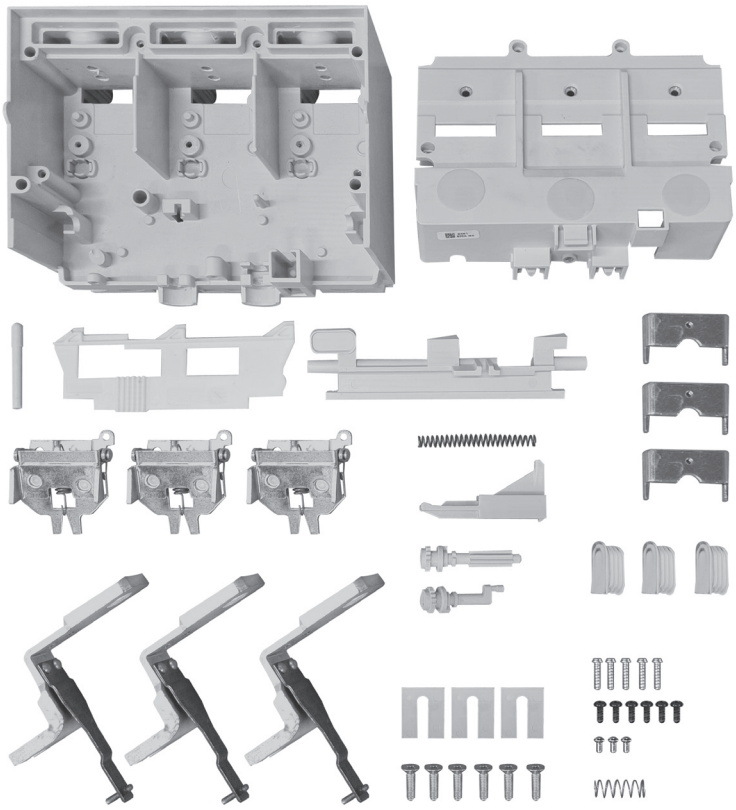

- 4 + 1 + 3 + 6 + 3 + 3 screws (Metal)
- 1 trip unit cover (Plastic)
- 3 fixed cores (Metal)
- 3 plugs (Rubber) SEPARATE TREATMENT (Thermoplastics containing brominated flame retardants)
- 3 thermal groups (Metal)
- 3 spacers (Plastic)
- 1 shaft (Plastic)
- 1 + 1 springs (Metal)
- 2 trimmers (Plastic) SEPARATE TREATMENT (Thermoplastics containing brominated flame retardants)
- 1 tripping rod (Plastic) SEPARATE TREATMENT (Thermoplastics containing brominated flame retardants)
- 3 metal groups (Metal)
- 1 magnetic slide (Plastic)
- 1 rod (Plastic) SEPARATE TREATMENT (Thermoplastics containing brominated flame retardants)
- 1 trip unit case (Plastic)

7. ENERGY CONSUMPTION FOR CIRCUIT BREAKERS DISASSEMBLY

Since all disassembly operations illustrated in this document are manual, the CO_2 equivalent emissions can be considered null/negligible.

—

ABB SACE
A division of ABB S.p.A.
L.V. Breakers
Via Pescaria 5,
24123 Bergamo - Italy
Phone: +39 035 395.111
Fax: +39 035 395.306-433

abb.it/lowvoltage

© Copyright 2022 ABB. All rights reserved.
Specifications subject to change without notice.

1SDH002297A1001 - ECN000285442