First angle projection. Original drawing made with 3D CAD. Set the correct scale factor when adding dimensions after DWG/DXF conversion.

IP21

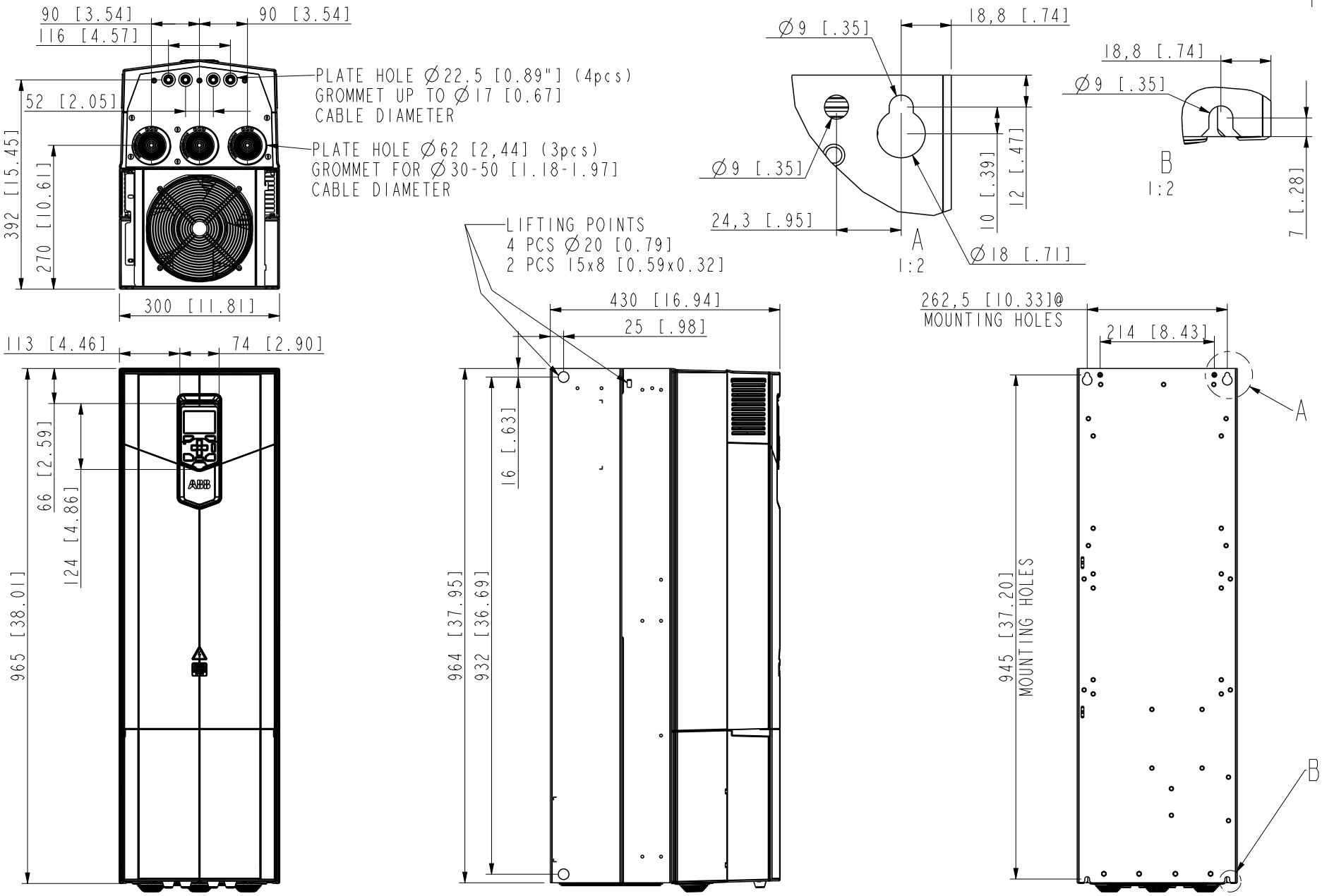

C	Updated grommet cable diameter. Added grommet location dimensions	27-Jan-20	J.Savolainen
B	Updated P940 sheet	22-Dec-17	J.Savolainen
		5000008996 93	5000013767 47

We reserve all rights in this document and in the information contained therein. Reproduction, use or disclosure to third parties without express authority is strictly forbidden.
© ABB Oy. PROPRIETARY AND SECRET INFORMATION. CONFIDENTIAL

3AXD50000047667 | C.2+
ACXX80-XI_R8_MAIN_ASSEMBLY (ASSEM)102

Based on	Prepared J.Pekkarinen	12-Jun-17
Customer	Check. S.Lilja	12-Mar-20
	Appr. J.Zhuang	12-Mar-20
Cust. Doc. No.	Project name Corinth	
DMS Number 3AXD10000575061	Weight kg	

Title DIMENSION DRAWING
ACS880-11/31 R8
ACS880-11/31 R8

ABB

Doc. des. DIMENSION DRAWING	Scale 1:10	Form A4	
Resp.dept. EJO	Rev.ind. C (AP)		Lang. EN
Doc. No. 3AXD50000047667			Sheet 1
			Total 3

First angle projection. Original drawing made with 3D CAD. Set the correct scale factor when adding dimensions after DWG/DXF conversion.

IP55

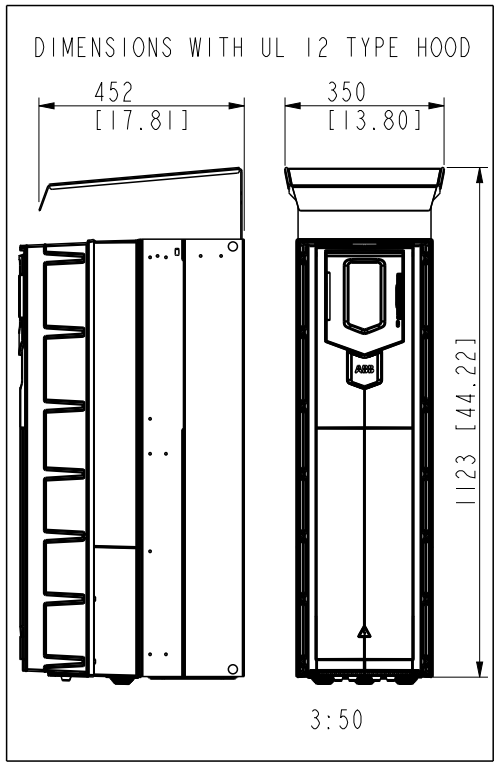

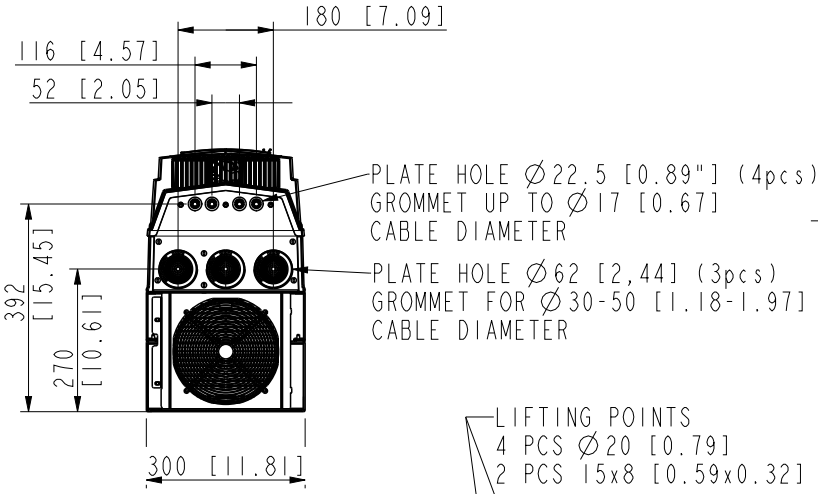

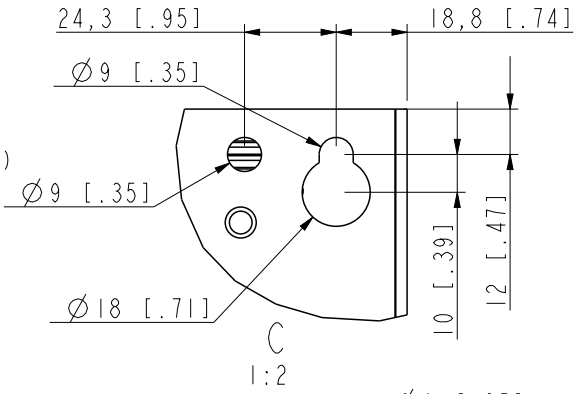

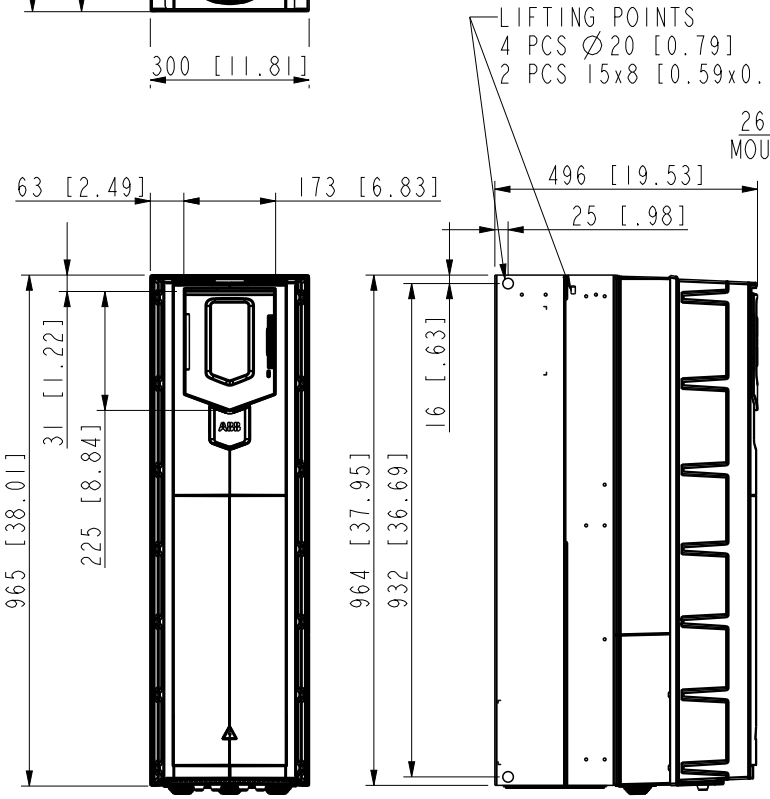

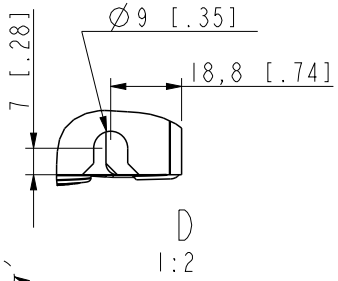

We reserve all rights in this document and in the information contained therein. Reproduction, use or disclosure to third parties without express authority is strictly forbidden.
© ABB Oy. PROPRIETARY AND SECRET INFORMATION. CONFIDENTIAL

C	Updated grommet cable diameter. Added grommet location dimensions	27-Jan-20	J.Savolainen	5000001376747
B	Updated P940 sheet	22-Dec-17	J.Savolainen	5000008996693

3AXD50000047667 C.2+
ACXX80-XI_R8_MAIN_ASSEMBLY (ASSEM)102

Based on	Prepared J.Pekkarinen 12-Jun-17	Title DIMENSION DRAWING	Doc. des. DIMENSION DRAWING / Scale 7:100 / Form A4
Customer	Check. S.Lilja 12-Mar-20	ACS880-11/31 R8	
	Appr. J.Zhuang 12-Mar-20	ACS880-11/31 R8	Resp.dept. EJO / Rev.ind. C (AP) / Lang. EN
Cust. Doc. No.	Project name Corinth	ABB	Doc. No. 3AXD50000047667 / Sheet 2
DMS Number 3AXD10000575061	Weight kg		Total 3

First angle projection. Original drawing made with 3D CAD. Set the correct scale factor when adding dimensions after DWG/DXF conversion.

P940

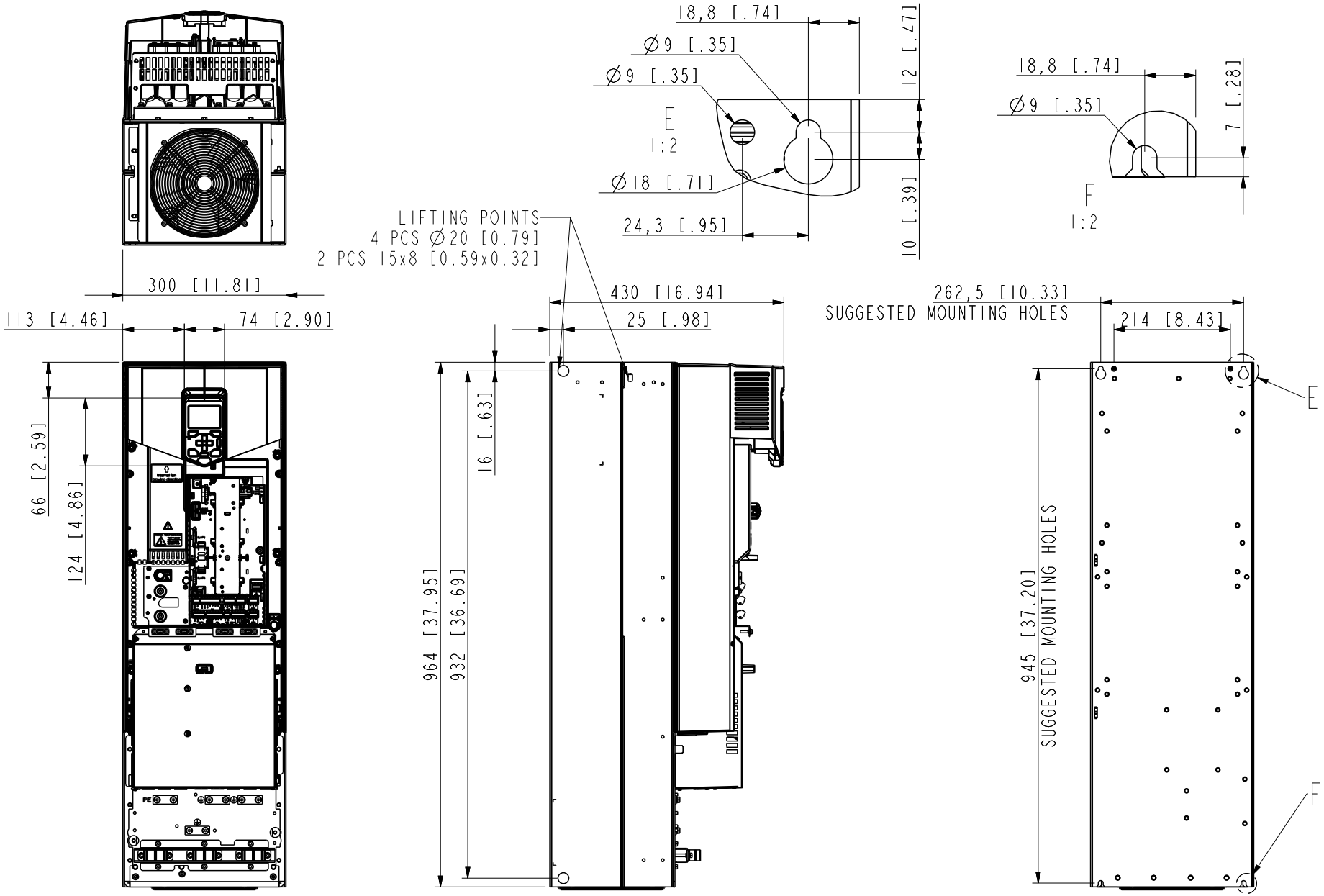

Based on	Prepared J.Pekkarinen 12-Jun-17	Title DIMENSION DRAWING	Doc. des. DIMENSION DRAWING	Scale 1:10	Form A4		
Customer	Check. S.Lilja 12-Mar-20	ACS880-11/31 R8					
	Appr. J.Zhuang 12-Mar-20	ACS880-11/31 R8	Resp.dept. EJO	Rev.ind. C (AP)		Lang. EN	
Cust. Doc. No.	Project name Corinth	ABB	Doc. No. 3AXD50000047667			Sheet 3	
DMS Number 3AXD10000575061	Weight kg					Total 3	

B	Updated P940 sheet	22-Dec-17	J.Savolainen	500000899693
C	Updated grommet cable diameter. Added grommet location dimensions	27-Jan-20	J.Savolainen	500001376747

3AXD50000047667 C.2+
ACXX80-X1_R8_MAIN_ASSEMBLY (ASSEM)102

We reserve all rights in this document and in the information contained therein. Reproduction, use or disclosure to third parties without express authority is strictly forbidden.
© ABB Oy. PROPRIETARY AND SECRET INFORMATION. CONFIDENTIAL