First angle projection. Original drawing made with 3D CAD. Set the correct scale factor when adding dimensions after DWG/DXF conversion.

**IP20**

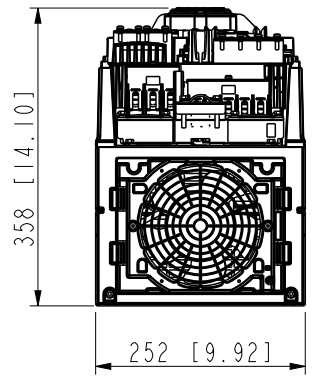


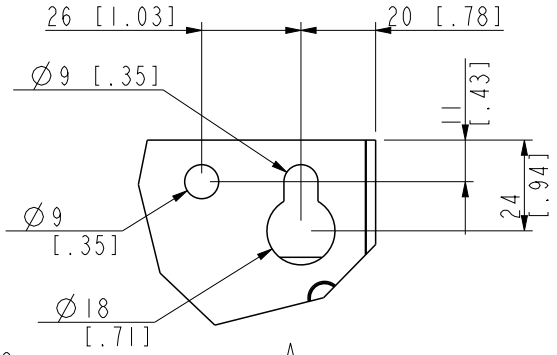


A
1:2

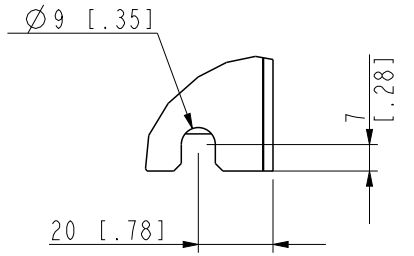


B
1:2

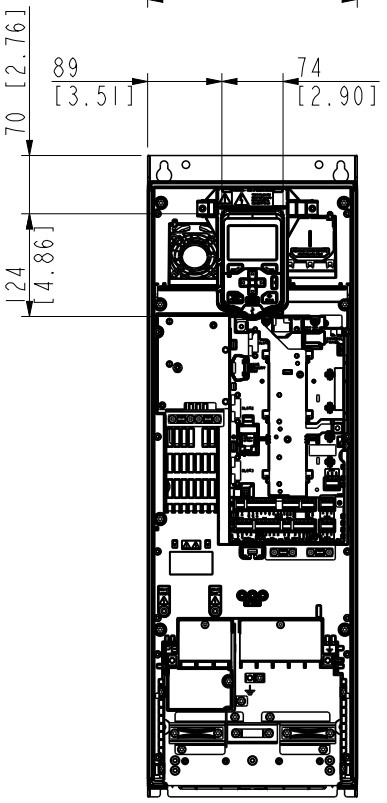


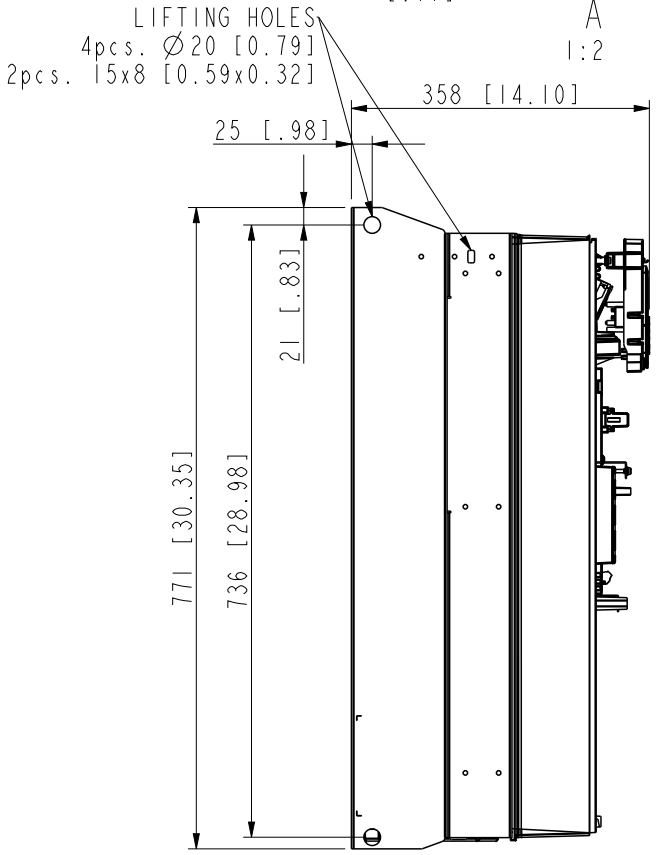


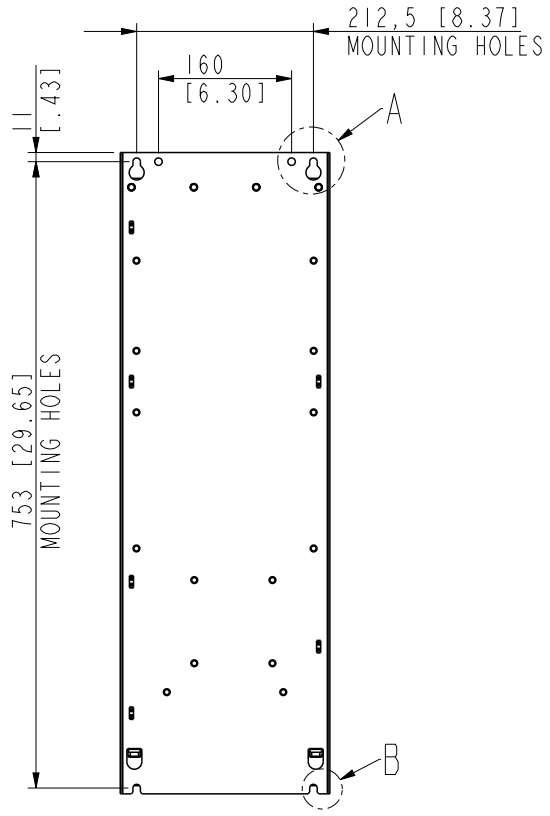


We reserve all rights in this document and in the information contained therein. Reproduction, use or disclosure to third parties without express authority is strictly forbidden.
© ABB Oy. PROPRIETARY AND SECRET INFORMATION. CONFIDENTIAL

| | | | | | | | |
|---|---|---|---|---|---|---|---|
| 3AXD50000862900 | A.1+ | A | Initial Approval | S.Lilja | 22-Nov-21 | | |
| ZANTE_R6_MAIN_ASSY (ASSEM) | -.56+ | | | | | | |

| | | | | | | | |
|---|---|---|---|---|---|---|---|
| Based on | Prepared | S.Lilja | 22-Nov-21 | Title DIMENSION DRAWING | Doc. des. DIMENSION DRAWING | Scale 1:100 | Form A4 |
| Customer | Check. | J.Savolainen | 22-Nov-21 | ACS880-11_31 R6 | | | |
| | Appr. | M.Mielonen | 22-Nov-21 | ACS880-11_31 R6 | Resp.dept. | Rev.ind. A (AP) | Lang. EN |
| Cust. Doc. No. | Project name | ZANTE | | ABB | Doc. No. 3AXD50000862900 | | Sheet 1 |
| DMS Number 3AXD10001492958 | Weight kg | | | | | | Total 3 |

First angle projection. Original drawing made with 3D CAD. Set the correct scale factor when adding dimensions after DWG/DXF conversion.

**IP21**

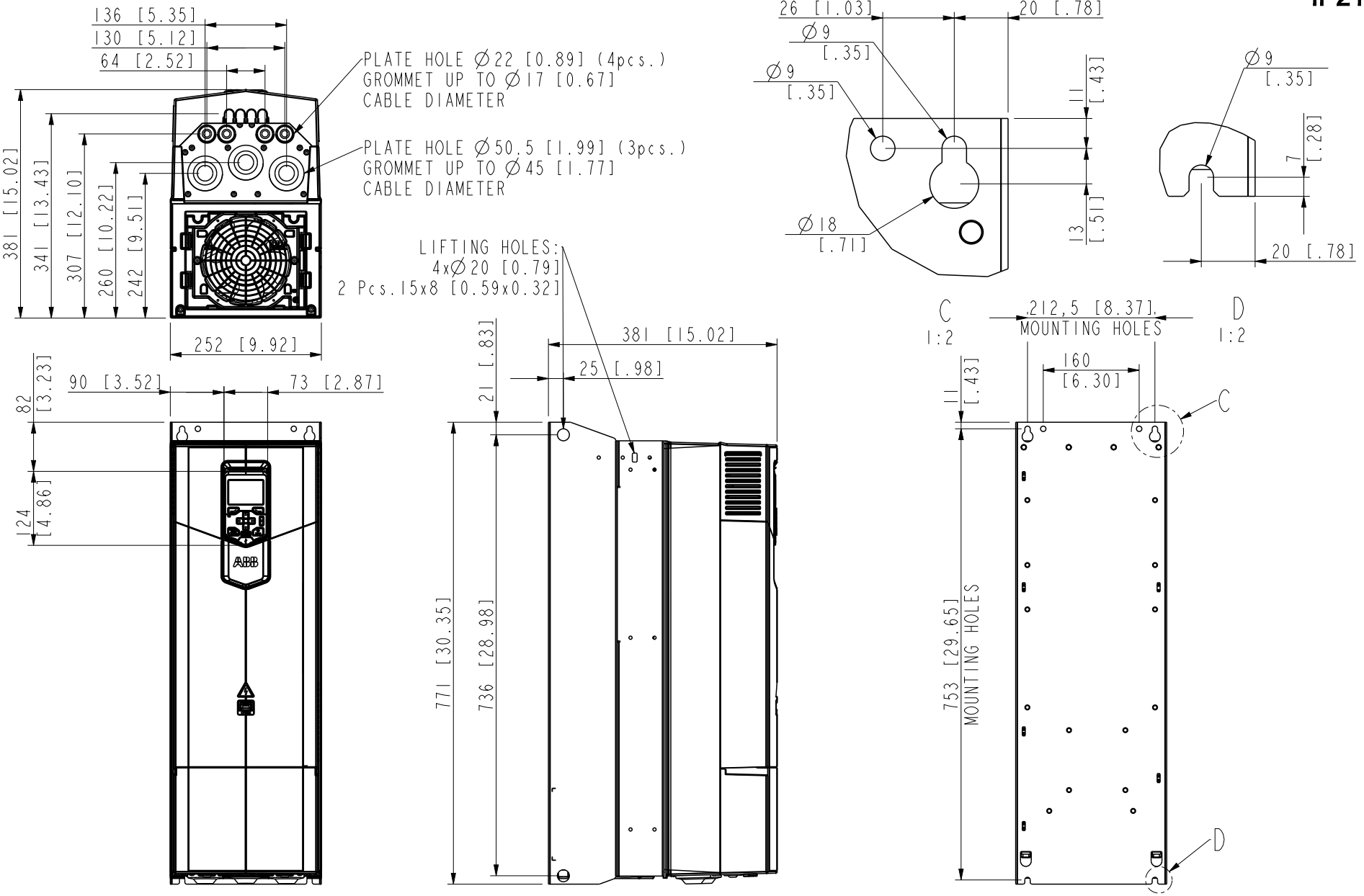


| | | | | | | |
|---|---|---|---|---|---|---|
| Based on | Prepared S.Lilja 22-Nov-21 | Title DIMENSION DRAWING | Doc. des. DIMENSION DRAWING | Scale 11:100 | Form A4 | |
| Customer | Check. J.Savolainen 22-Nov-21 | ACS880-11_31 R6 | | | | |
| | Appr. M.Mielonen 22-Nov-21 | ACS880-11_31 R6 | Resp.dept. | Rev.ind. A (AP) | Lang. EN | |
| Cust. Doc. No. | Project name ZANTE | ABB | Doc. No. 3AXD50000862900 | | Sheet 2 | |
| DMS Number 3AXD10001492958 | Weight kg | | | | Total 3 | |

A Initial Approval 22-Nov-21 S.Lilja

3AXD50000862900 A.1+

ZANTE_R6_MAIN_ASSY (ASSEM) -.56+

We reserve all rights in this document and in the information contained therein. Reproduction, use or disclosure to third parties without express authority is strictly forbidden. © ABB Oy. PROPRIETARY AND SECRET INFORMATION. CONFIDENTIAL

First angle projection. Original drawing made with 3D CAD. Set the correct scale factor when adding dimensions after DWG/DXF conversion.

**IP55**

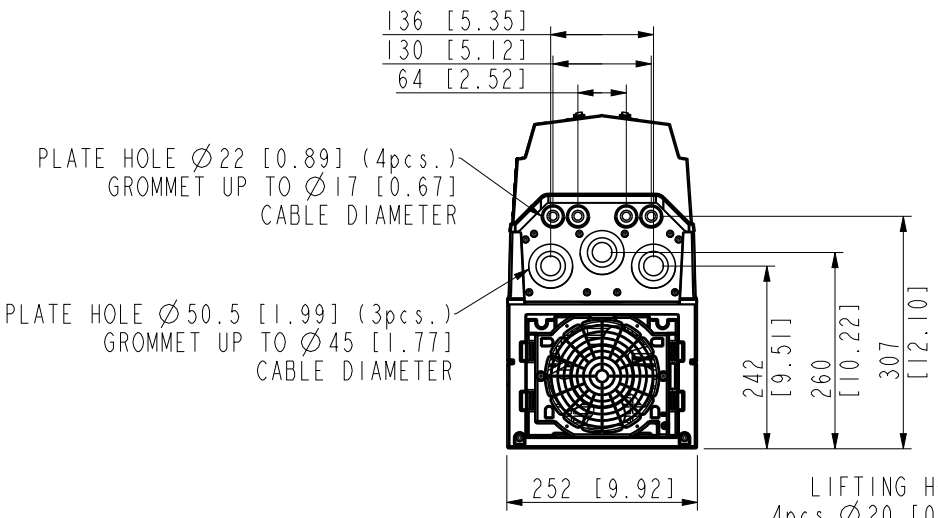


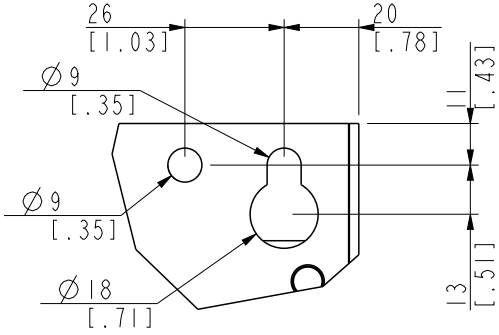


F
1:2

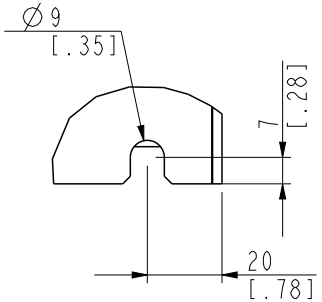


E
1:2

DIMENSIONS WITH UL TYPE 12 HOOD

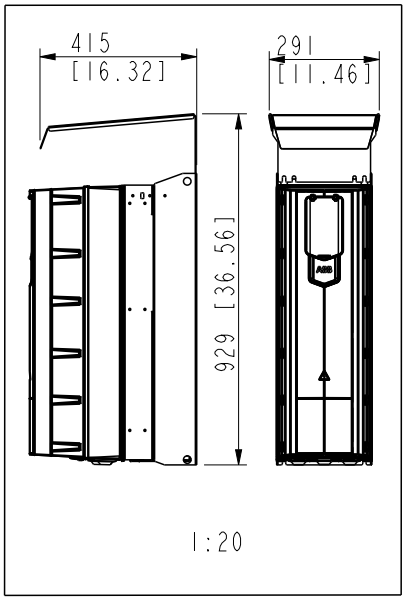


1:20

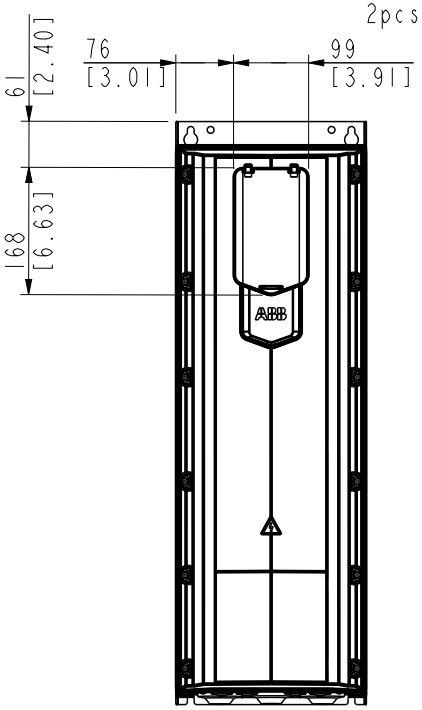


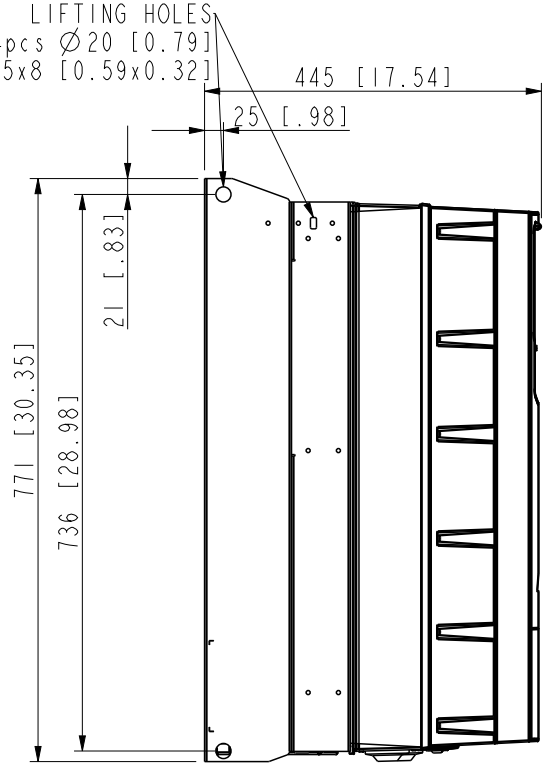


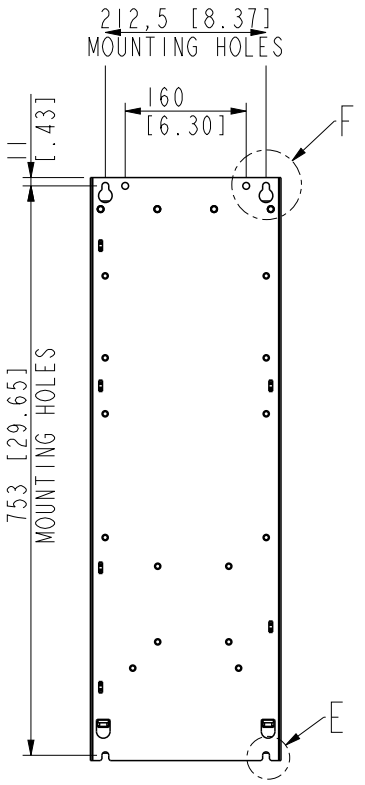


We reserve all rights in this document and in the information contained therein. Reproduction, use or disclosure to third parties without express authority is strictly forbidden.
© ABB Oy. PROPRIETARY AND SECRET INFORMATION. CONFIDENTIAL

| | | | | | | | |
|---|---|---|---|---|---|---|---|
| 3AXD50000862900 | A.1+ | A | Initial Approval | S.Lilja | 22-Nov-21 | | |
| ZANTE_R6_MAIN_ASSY (ASSEM) | -.56+ | | | | | | |

| | | | | | | | |
|---|---|---|---|---|---|---|---|
| Based on | | Prepared | S.Lilja | 22-Nov-21 | Title | DIMENSION DRAWING | |
| Customer | | Check. | J.Savolainen | 22-Nov-21 | | ACS880-11_31 R6 | |
| | | Appr. | M.Mielonen | 22-Nov-21 | | ACS880-11_31 R6 | |
| Cust. Doc. No. | | Project name | ZANTE | | ABB | | |
| DMS Number | 3AXD10001492958 | Weight kg | | | | | |

| | | | | | |
|---|---|---|---|---|---|
| Doc. des. | DIMENSION DRAWING | Scale | 1:10 | Form | A4 |
| Resp.dept. | | Rev.ind. | A (AP) | Lang. | EN |
| Doc. No. | 3AXD50000862900 | | | Sheet | 3 |
| | | | | Total | 3 |