Busbar Feed

Q1: XR Switch disconnector Fuse
K1: ITS Module
X1: Multiplug Terminal
V1: Power/Alive indicator
V2: Valid com indicator
V3: Fuse Blown indicator
V4: Local/Remote indicator
K2: Fuse boards 3x
S1: Local/Remote selector
T : Temperature sensor

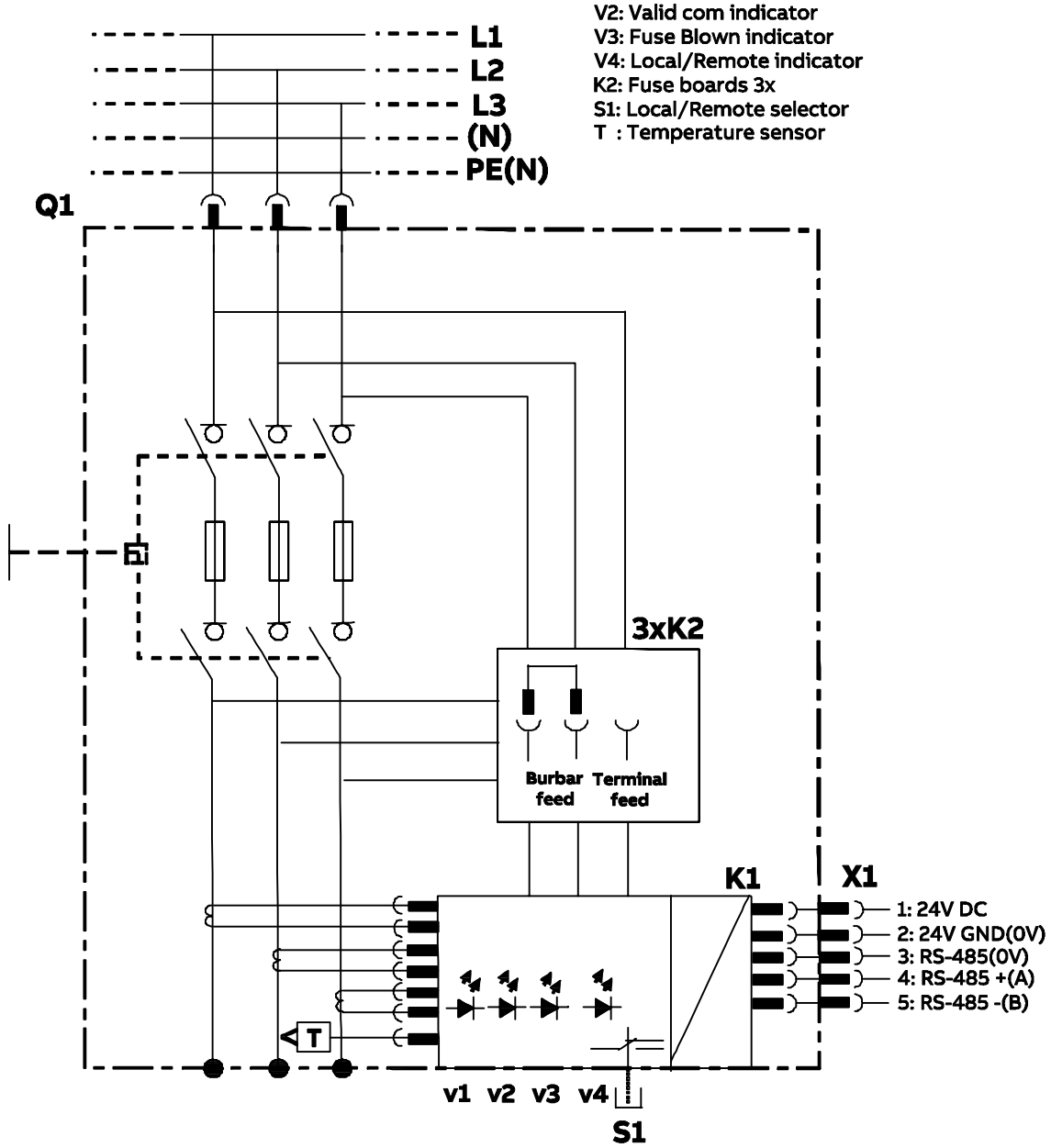

Terminal Feed

Q1: XR Switch disconnector Fuse
K1: ITS Module
X1: Multiplug Terminal
V1: Power/Alive indicator
V2: Valid com indicator
V3: Fuse Blown indicator
V4: Local/Remote indicator-with S1
K2: Fuse boards 3x
S1: Local/Remote selector
T : Temperature sensor

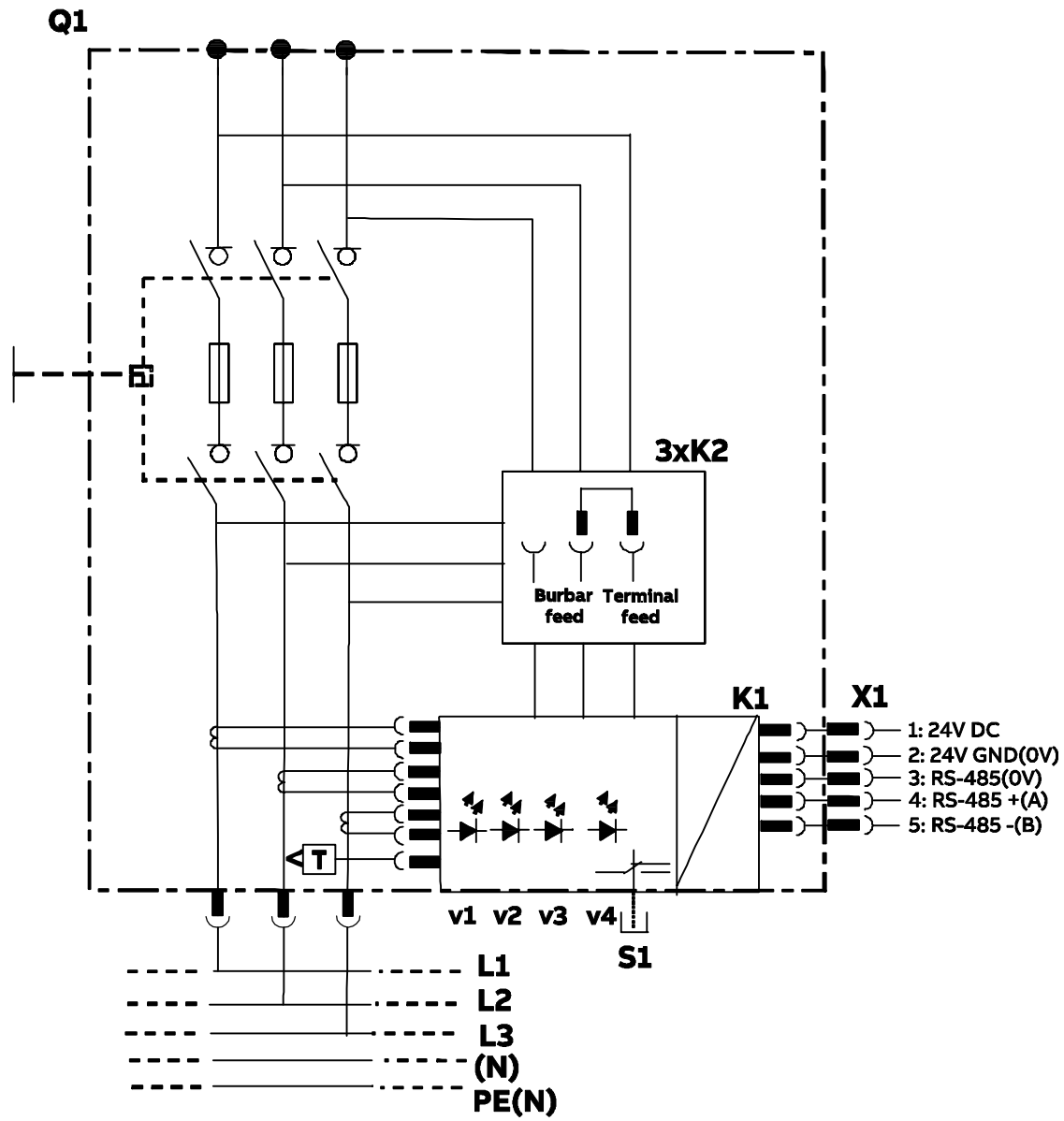

*FUNCTIONAL DIMENSIONS Fo Fi Fc OR ( ); CHANGED DIMENSIONS

COLOR	SURFACE	TOOL	QPS	FTS	VTP	UNMARKED ROUNDINGS	UNMARKED DRAFTS
			N	N	N		

RAW MATERIAL	MATERIAL NORM	NET WEIGHT	VOLUME	AREA

CREATED	MODIFIED	APPROVED
2021-12-13 Jared-zhiding.lin	2023-04-10 Sophia-Yuping.Liu	

ECN NUMBER	ECN DATE	PRODUCT	DRAWING FILE
		SlimLine	

ORGANIZATION	DEPARTMENT	TOLERANCES
ABB CN, Smart Power	EPSP RD CN	

TITLE (ZH)	TYPE	SCALE	FORMAT	LANGUAGE	SHEET
		1:1	A3	EN/ZH	1/1

TITLE (EN)	DOC. NO.	REV.
Circuit diagram_XRG-ITS	Circuit diagram_XRG-ITS	B

Rev	Description
A	New drawing
B	1. add description of temperature

Proprietary and Secret Information

We reserve all rights in this document and in the information contained therein. Reproduction, use or disclosure to third parties without express authority is strictly forbidden.
Copyright ©2019 ABB.
保密文件，经手人赋有保密义务；未经授权而披露，权利人享有追偿权利！