Bypass Isolation Automatic Transfer Switches

ZENITH ZBTS T-SERIES 1000A-3000A(R5B)

TABLE OF CONTENT

PAGE	PAGE DESCRIPTION
1	INDEX
2	ACRONYMS AND DEFINITIONS
3	SEQUENCE OF OPERATION
4	MECHANICAL LAYOUT FOR ATS
5	MECHANICAL LAYOUT FOR BYPASS
6	ATS TruControl PANEL
7	BYPASS CONTROL PANEL
8	PRIMARY CIRCUIT-ATS AND BYP SCHEMATIC
9	ATS CONNECTION
10	BYPASS CONNECTION
11	CUSTOMER CONNECTION DIAGRAM
12	INPUT/OUTPUT PACKAGES PROGRAMMING
13	WIRE NUM OF CONNECTOR
14	LOAD SHED/PARALLEL TRIP OUTPUT AND ALARM OPTION
15	BYPASS AUXILIARY CONTACT AND AUDIBLE TRANSITION ALARM OPTION
16	SWITCH-Test/Auto/Inhibit/Start OPTION

Note:
The available operation type:
Open (standard) transition Zenith ZBTS T-series ATS, from 1600A-3000A, 200-480 Vac
Delayed transition Zenith ZBTSD T-series ATS,from 1600A-3000A, 200-480 Vac
Closed transition Zenith ZBTSCT T-series ATS, from 1000A-3000A, 200-480 Vac

Proprietary and Secret Information
We reserve all rights in this document and in the information contained therein. Reproduction,use or disclosure to third parties without express authority is strictly forbidden.Copyright ©2019 ABB.
保密文件经手人赋有保密义务;未经授权而披露,权利人享有追偿权利!

*FUNCTIONAL DIMENSIONS Fo Fi Fc

	SURFACE	TOOL	QPS	FTS	VTP	UNMARKED ROUNDINGS	UNMARKED DRAFTS
			N	N	N		

RAW MATERIAL	MATERIAL NORM	NET WEIGHT	VOLUME	AREA

CREATED	MODIFIED	APPROVED
DEREK	DEREK	Hanks

ECN NUMBER	ECN DATE	PRODUCT	DRAWING FILE
	2021-9-07	ZENITH ZBTS T-SERIES	Index

ORGANIZATION	DEPARTMENT	TOLERANCES
Smart Power Business Line	RD Center CN	

TITLE (ZH)	TYPE	SCALE	FORMAT	LANGUAGE	SHEET
		NA	A3	EN/ZH	1/16

TITLE (EN)	DOC. NO.	REV.
ZBTS 1600-3000A	2TFM360001A1001	A

Rev	Description
A	First release

ACRONYMS AND DEFINITIONS

	DESCRIPTION
A3−1,A3−2	LIMIT SWITCH ACTIVATED WHEN ATS IS LOCKED IN SOURCE 2 POSITION
A4−1,A4−2	LIMIT SWITCH ACTIVATED WHEN ATS IS LOCKED IN SOURCE 1 POSITION
AA	LIMIT SWITCH ACTIVATED WHEN ATS IS IN CONNECT LOCATION
AB3	LIMIT SWITCH ACTIVATED WHEN MTS IS LOCKED IN SOURCE 2 POSITION
AB4	LIMIT SWITCH ACTIVATED WHEN MTS IS LOCKED IN SOURCE 1 POSITION
AB3R	RELAY ACTIVATED WHEN MTS IS LOCKED IN S2 POSITION
AB4R	RELAY ACTIVATED WHEN MTS IS LOCKED IN S1 POSITION
AC−1	ATSE POWER INPUT PLUG
AI	LIMIT SWITCH ACTIVATED WHEN ATS IS IN ISALATION LOCATION
AT	LIMIT SWITCH ACTIVATED WHEN ATS IS IN TEST LOCATION
ATR	RELAY FOR AUTO−INHIBT MODETRANSITION
ATS	AUTOMATIC TRANSFER SWITCHES EQUIPMENT
BR1,BR	BRIDGE RECTIFIER, MAKE AC TO DC
BYP	MANUAL TRANSFER SWITCHES
CE	SOURCE 2 CLOSE TRANSFER COIL
CEO	SOURCE 2 OPEN TRANSFER COIL
CN	SOURCE 1 CLOSE TRANSFER COIL
CNO	SOURCE 1 OPEN TRANSFER COIL
CN/CEO	LOAD SHED OPEN TRANSFER COILDC−1,DC−2
DT TIMER	CENTER-OFF DELAY.
DW TIMER	CENTER-OFF DELAY.
DC−1,DC−2	ATS SIGNAL INPUT PLUG
DS SWITCH	DAUTO−INHIBIT MOED SELECTION SWITCH, LOCATED ON DOOR
EKIP POWER	EKIP OXEAL POWER MODULE
EKIP 10K	EKIP MODULE FOR EXTERNAL I/O SIGNALING,10 INPUT/10 OUTPUT
ENGINE START	ENGINE START CONTACTS.
L−1,2,3,N	LOAD OUTPUT; PHASE 1;PHASE 2,PHASE 3,PHASE NEUTRAL
LAA	LIGHT ILLUMINATED WHEN ATS IS IN CONNECT POSITION
LAE	LIGHT ILLUMINATED WHEN ATS CONTACT IS IN SOURCE 2
LAI	LIGHT ILLUMINATED WHEN ATS IS IN ISOLATED POSITION
LAN	LIGHT ILLUMINATED WHEN ATS CONTACT IS IN SOURCE 1
LAT	LIGHT ILLUMINATED WHEN ATS IS IN TEST POSITION
LBE	LIGHT ILLUMINATED WHEN MTS(BYP) IS IN SOURCE 2
LBN	LIGHT ILLUMINATED WHEN MTS(BYP) IS IN SOURCE 1
LDS	LIGHT ILLUMINATED WHEN DS SWITCH IS IN INHIBIT MODE
LEA	LIGHT ILLUMINATED WHEN SOURCE 2 AVAILABLE
LIT	LIGHT ILLUMINATED WHEN ATS AND MTSE CONTACT IS IN PARALLEL
LNA	LIGHT ILLUMINATED WHEN SOURCE 1 AVAILABLE
LTR4	REMOTE CONTROL TO I RELAY
LTR5	REMOTE CONTROL TO II RELAY

DESIGNATION	DESCRIPTION
LTR6,LTR7	MANUAL−AUTO MODE RELAY
HMI	HUMAN MACHINE INTERFACE PANEL.
PA	CONNECTOR OF TRUCONTROLLER POWER SUPPLY AND VOLTAGE SENSOR
PB	CONNECTOR OF ATS SOLENOID POWER SUPPLY
PB1	ATS CONTACT RESET BUTTON
PC	CONNECTOR OF ATS SOLENOID CONTROL AND CONTCAT POSITION
PD	CONNECTOR OF ATS CONTACT POSITION FOR CUSTOMER
PE	CONNECTOR OF ATS LOCATION
PF	CONNECTOR OF MTS CONTACT POSITION
PG	CONNECTOR OF DISCONNECT SWITCH
PH	CONNECTOR OF DISPLAY PANEL
PI	CONNECTOR OF CONTACT RESET
PT1000	TEMPERATURE SENSOR ON LOAD L2
RATING PLUG	PROCESS THE SIGNAL GENERATED BY ROGOWSKI COIL
ROGOWSKI COIL	LOAD CURRENT MEASUREMENT
RNH	SOURCE 1 AVAILABLE CHECK RELAY
S1−1,2,3,N	SOURCE 1 INPUT; PHASE 1;PHASE 2,PHASE 3,PHASE NEUTRAL
S2−1,2,3,N	SOURCE 2 INPUT; PHASE 1;PHASE 2,PHASE 3,PHASE NEUTRAL
SCR−CE2	LOAD SHED RELAY MODULE
SCR−E	SOURCE 2 CLOSE TRANSFER MODULE
SCR−EO	SOURCE 2 OPEN TRANSFER MODULE
SCR−N	SOURCE 1 CLOSE TRANSFER MODULE
SCR−NO	SOURCE 1 OPEN TRANSFER MODULE
SE−1	LIMIT SWITCH ACTIVATED WHEN ATS CONTACT IS IN SOURCE 2 POSITION
SEO−1	LIMIT SWITCH ACTIVATED WHEN ATS CONTACT IS IN OPEN POSITION
SN−1	LIMIT SWITCH ACTIVATED WHEN ATS CONTACT IS IN SOURCE 1 POSITION
SNO−1	LIMIT SWITCH ACTIVATED WHEN ATS CONTACT IS IN OPEN POSITION
T TIMER	TRANSNFER FROM S2 TO S1 DELAY
TP1	CONNECTOR OF ATSE POWER SUPPLY
TP2	CONNECTOR OF ATSE CONTROL
U TIMER	GENERATOR STOP RELAY
W TIMER	TRANSFER FROM S1 TO S2 DELAY
XBN	BYPASS SOURCE 1 POWER TRANSFORMER
XBE	BYPASS SOURCE 2 POWER TRANSFORMER

*FUNCTIONAL DIMENSIONS Fo Fi Fc

	SURFACE	TOOL	QPS	FTS	VTP	UNMARKED ROUNDINGS	UNMARKED DRAFTS
			N	N	N		

RAW MATERIAL	MATERIAL NORM	NET WEIGHT	VOLUME	AREA

CREATED	MODIFIED	APPROVED
DEREK	DEREK	Hanks

ECN NUMBER	ECN DATE	PRODUCT	DRAWING FILE
	2021−9−07	ZENITH ZBTS T−SERIES	Acronyms and Definitions

ORGANIZATION	DEPARTMENT	TOLERANCES
Smart Power Business Line	RD Center CN	

TITLE (ZH)	TYPE	SCALE	FORMAT	LANGUAGE	SHEET
		NA	A3	EN/ZH	2/16

TITLE (EN)	DOC. NO.	REV.
ZBTS 1600−3000A	2TFM360001A1001	A

Proprietary and Secret Information

We reserve all rights in this document and in the information contained therein. Reproduction,use or disclosure to third parties without express authority is strictly forbidden.Copyright ©2019 ABB.

保密文件经手人赋有保密义务;未经授权而披露,权利人享有追偿权利!

Rev	Description
A	First release

SEQUENCE OF OPERATION

SEQUENCE OF OPERATION - OPEN TRANSITION

1) WHEN SOURCE 1 LINE VOLTAGE OR FREQUENCY DROPS BELOW THE PRESET "FAIL" VALUES, THE SOURCE 1 VOLTAGE SENSING CIRCUIT INITIATES THE ENGINE START CIRCUIT THRU THE ENGINE START TIMER "P".

2) WHEN SOURCE 2 LINE VOLTAGE AND FREQUENCY REACH THE PRESET "RESTORE" VALUES (ESTABLISHED DURING THE W TIMER ELAPSE CYCLE), THE Tru CONTROLLER INITIATES A TRANSFER SIGNAL THROUGH THE SCR-E DEVICE TO OPERATE THE CE TRANSFER OPERATOR.

3) THE LOAD WILL BE TRANSFERRED TO THE SOURCE 2 POSITION. THE TRANSFER SWITCH IS MECHANICALLY LOCKED AND ACKNOWLEDGED THRU THE SE LIMIT SWITCH.

4) WHEN THE SOURCE 1 LINE VOLTAGE AND FREQUENCY REACH THE PRESET "RESTORE" VALUES (ESTABLISHED BEFORE THE T TIMER ELAPSE CYCLE), THE TruCONTROLLER INITIATES A TRANSFER SIGNAL THROUGH THE SCR-N MODULE TO OPERATE THE CN TRANSFER OPERATOR.

5) THE LOAD WILL BE TRANSFERRED TO THE SOURCE 1 POSITION. THE TRANSFER SWITCH IS MECHANICALLY LOCKED AND ACKNOWLEDGED THRU THE SN LIMIT SWITCH.

6) THE Tru-CONTROLLER WILL INITIATE AN ENGINE COOL-DOWN SEQUENCE. THE ENGINE COOL DOWN SEQUENCE WILL ALLOW THE GENERATOR TO OPERATE UNLOADED UNTIL THE U TIMER SETTING HAS ELAPSED. ONCE COMPLETE, THE CONTROLLER WILL AUTOMATICALLY SHUT DOWN THE ENGINE.

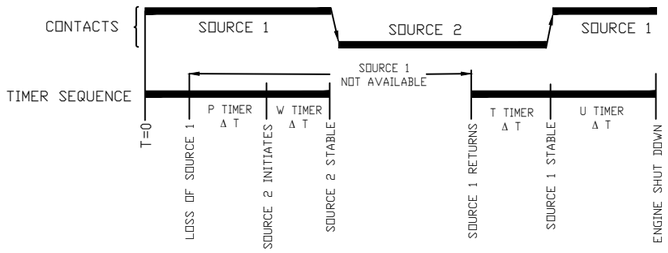

OPEN TRANSITION TRANSFER DIAGRAM

NOTE: A MANUAL "BYPASS" PUSHBUTTON IS AVAILABLE ON THE Tru CONTROLLER. THIS FEATURE ALLOWS CERTAIN TIMERS TO BE BYPASSED IF THE PRE-SET CONDITIONS HAVE NOT BEEN SET CORRECTLY.

DISCONNECT CONTROL SWITCH (DS):
WHEN THE DISCONNECT CONTROL SWITCH IS PLACED IN THE INHIBIT POSITION, THE CIRCUITS TO THE TRANSFER OPERATORS ARE OPENED AND TRANSFER CANNOT TAKE PLACE

SEQUENCE OF OPERATION - DELAY TRANSITION

1) WHEN SOURCE 1 LINE VOLTAGE OR FREQUENCY DROPS BELOW THE PRESET "FAIL" VALUES, THE SOURCE 1 VOLTAGE SENSING CIRCUIT INITIATES THE ENGINE START CIRCUIT THRU THE ENGINE START TIMER "P".

2) WHEN SOURCE 2 LINE VOLTAGE AND FREQUENCY REACH THE PRESET "RESTORE" VALUES (ESTABLISHED DURING THE W TIMER ELAPSE CYCLE), THE TruCONTROLLER INITIATES A TRANSFER SIGNAL THROUGH THE SCR-NO MODULE TO OPERATE THE CNO TRANSFER OPERATOR.

3) THE LOAD WILL BE TRANSFERRED TO THE OPEN POSITION. ONCE THE SNO / SEO LIMIT SWITCHES HAVE BEEN ACTIVATED, THE MX CONTROLLER WILL INITIATE THE DW TIME DELAY. AFTER A SET TIME DELAY (ESTABLISHED THRU THE DW TIMER), THE MX CONTROLLER INITIATES A TRANSFER SIGNAL THROUGH THE SCR-E MODULE TO OPERATE THE CE TRANSFER OPERATOR.

4) THE LOAD WILL BE TRANSFERRED TO THE SOURCE 2 POSITION. THE TRANSFER SWITCH IS MECHANICALLY LOCKED AND ACKNOWLEDGED THRU THE SE LIMIT SWITCH.

5) WHEN SOURCE 1 LINE VOLTAGE AND FREQUENCY REACH THE PRESET "RESTORE" VALUES (ESTABLISHED DURING THE T TIMER ELAPSE CYCLE), THE TruCONTROLLER INITIATES A TRANSFER SIGNAL THROUGH THE SCR-EO MODULE TO OPERATE THE CEO TRANSFER OPERATOR.

6) THE LOAD WILL BE TRANSFERRED TO THE OPEN POSITION. ONCE THE SNO / SEO LIMIT SWITCHES HAVE BEEN ACTIVATED, THE TruCONTROLLER WILL INITIATE THE DT TIME DELAY. AFTER A SET TIME DELAY (ESTABLISHED THRU THE DT TIMER), THE TruCONTROLLER INITIATES A TRANSFER SIGNAL THROUGH THE SCR-N MODULE TO OPERATE THE CN TRANSFER OPERATOR.

7) THE LOAD WILL BE TRANSFERRED TO THE SOURCE 1 POSITION. THE TRANSFER SWITCH IS MECHANICALLY LOCKED AND ACKNOWLEDGED THRU THE SN LIMIT SWITCH.

8) THE TruCONTROLLER WILL INITIATE AN ENGINE COOL-DOWN SEQUENCE. THE ENGINE COOL DOWN SEQUENCE WILL ALLOW THE GENERATOR TO OPERATE UNLOADED UNTIL THE U TIMER SETTING HAS ELAPSED. ONCE COMPLETE, THE CONTROLLER WILL AUTOMATICALLY SHUT DOWN THE ENGINE.

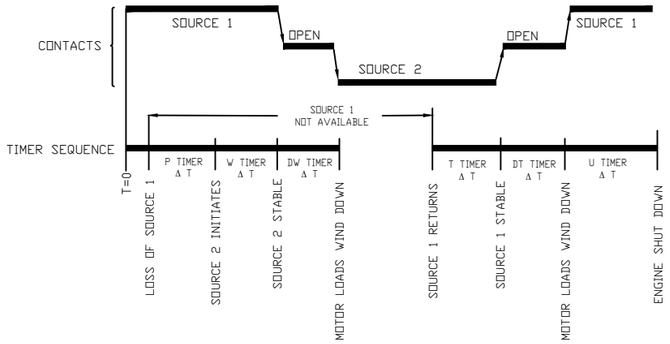

DELAY TRANSITION TRANSFER DIAGRAM

NOTE: A MANUAL "BYPASS" PUSHBUTTON IS AVAILABLE ON THE MX CONTROLLER. THIS FEATURE ALLOWS CERTAIN TIMERS TO BE BYPASSED IF THE PRE-SET CONDITIONS HAVE NOT BEEN SET CORRECTLY.

DISCONNECT CONTROL SWITCH (DS):
WHEN THE DISCONNECT CONTROL SWITCH IS PLACED IN THE INHIBIT POSITION, THE CIRCUITS TO THE TRANSFER OPERATORS ARE OPENED AND TRANSFER CANNOT TAKE PLACE

SEQUENCE OF OPERATION - CLOSED TRANSITION.

CLOSED TRANSITION TRANSFER SWITCHES ARE DESIGNED TO TRANSFER LOAD BETWEEN TWO AVAILABLE SOURCES, WITHOUT INTERRUPTING POWER TO THE LOAD (MAKE-BEFORE-BREAK). PARALLELING OF THE TWO SOURCES OCCURS WITHIN A PREDEFINED WINDOW OF SYNCHRONIZATION AND LASTS LESS THAN 100MS. THE INITIAL SOURCE IS THEN DISCONNECTED.

1) TO TEST THE ATS, ACTIVATE THE TEST SWITCH TO DROP OUT THE ENGINE START RELAY (P). WHEN THE SOURCE 2 LINE VOLTAGE AND FREQUENCY REACH THE PRESET "RESTORE" VALUES (ESTABLISHED DURING THE W TIMER ELAPSE CYCLE), THE ATS CLOSES INTO SOURCE 2 BY ACTIVATING THE SCR-E MODULE. THIS WILL OPERATE THE CE TRANSFER OPERATOR. THIS TRANSFER WILL OCCUR ONLY AFTER THE SYNC CHECK ENSURES THAT PROPER PHASE RELATIONSHIP BETWEEN BOTH SOURCES.
.

2) AFTER THE LOAD IS PARALLELED TO SOURCE 2, THE TRANSFER SWITCH IS MECHANICALLY LOCKED AND ACKNOWLEDGED THRU THE SE LIMIT SWITCH. THE CONTROLLER THEN INITIATES A TRANSFER SIGNAL THRU THE SCR-NO MODULE WHICH OPENS THE ATS OUT OF SOURCE 1. WHEN THE ATS HAS OPENED OUT OF SOURCE 1, THE SNO LIMIT SWITCH WILL ACTIVATE.

3) THE ATS HAS NOW CLOSED INTO THE SOURCE 2 POSITION WITHOUT INTERRUPTING THE LOAD.
4) RELEASING THE TEST SWITCH WILL ALLOW A RETRANSFER BACK TO SOURCE 1.

5) WHEN SOURCE 1 LINE VOLTAGE REACH THE PRESET "RESTORE" VALUES (ESTABLISHED BEFORE THE T TIMER ELAPSE), THE ATS CLOSES INTO SOURCE 1 BY ACTIVATING THE SCR-N MODULE. THIS WILL OPERATE THE CN TRANSFER OPERATOR. THIS TRANSFER WILL ONLY OCCUR AFTER THE SYNC CHECK ENSURES PROPER PHASE RELATIONSHIP BETWEEN BOTH SOURCES.

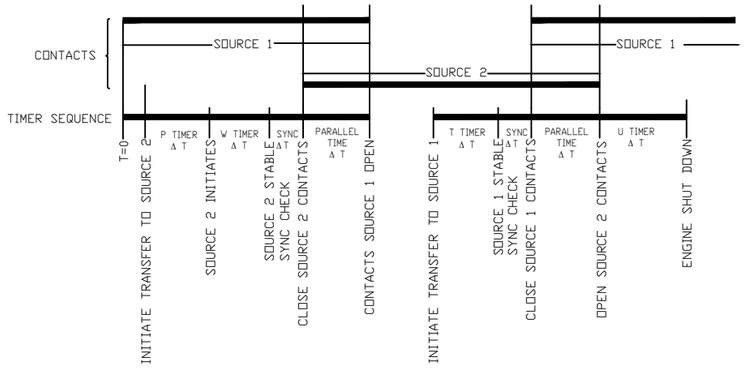

CLOSED TRANSITION TRANSFER DIAGRAM

6) AFTER THE LOAD HAS BEEN PARALLELED TO SOURCE 1, THE TRANSFER SWITCH IS MECHANICALLY LOCKED AND ACKNOWLEDGED THRU THE SN LIMIT SWITCH. THE CONTROLLER THEN INITIATES A TRANSFER SIGNAL THRU THE SCR-EO MODULE WHICH OPENS THE ATS OUT OF SOURCE 2.

7) WHEN THE ATS HAS OPENED OUT OF SOURCE 2, THE SEO LIMIT SWITCH ACTIVATED. THE ATS HAS NOW CLOSED BACK INTO THE SOURCE 1 POSITION WITHOUT INTERRUPTING THE LOAD.

8) IN ADDITION, ONCE THE SOURCE 1 STATUS HAS BEEN ACKNOWLEDGED, THE TruCONTROL WILL INITIATE AN ENGINE COOL-DOWN SEQUENCE. THE ENGINE COOL DOWN SEQUENCE WILL ALLOW THE GENERATOR TO OPERATE UNLOADED UNTIL THE U TIMER SETTING HAS ELAPSED ONCE COMPLETE. THE CONTROLLER WILL AUTOMATICALLY SHUT DOWN THE ENGINE.

9) THE ATS DEFAULTS TO A DELAYED TRANSITION TRANSFER WHEN SOURCE 1 FAILS. THIS SIGNALS THE GENERATOR TO START. AFTER THE GENERATOR VOLTAGE AND FREQUENCY REACH THE PRESET "RESTORE" VALUES, THE ATS TRANSFERS TO THE SOURCE 2. CLOSED TRANSITION TRANSFER IS NOT POSSIBLE WITH ONLY ONE SOURCE AVAILABLE. ONCE CAN SELECT A DELAYED TRANSITION TRANSFER VIA THE OPTIONAL TRANSITION MODE SELECTOR (TMS) FOR TESTING.

10) IF WHILE IN CLOSED TRANSITION MODE, THE ATS FAILS TO OPEN THE SOURCE IT IS ATTEMPTING TO "TRANSFER OUT OF", THE SOURCE THAT THE ATS JUST CLOSED INTO WILL BE OPENED LEAVING THE ATS IN ITS INITIAL SOURCE WHILE DISABLING ALL OTHER TRANSFER HAS BEEN PRESSED. PROVISIONS FOR ADDITIONAL PROTECTION IS AVAILABLE VIA AN SET (SHUNT TRIP CONTACT) TO SHUNT TRIP THE GENERATOR CIRCUIT BREAKER. ACTIVATING THE SET CONTACT WILL REMOVE THE GENERATOR FROM THE BUS IF NEITHER OPERATOR OPENED.

PARALLELING REQUIREMENTS:
1. THE UNIT IS FACTORY SET TO ACCOMPLISH TRANSFER WITHIN +/- 5 ELECTRICAL DEGREES.
2. REQUIRES AN ISOCHRONUS GOVERNOR WITH AN OPERATING FREQUENCY OF 60 ± 0.2 HZ.
3. REQUIRES A SHUNT TRIP BREAKER ON THE GENERATOR SET WITH A RESPONSE TIME NOT EXCEEDING 50MS.

*FUNCTIONAL DIMENSIONS (Fo) (Fi) (Fc)

	SURFACE	TOOL	QPS	FTS	VTP	UNMARKED ROUNDINGS	UNMARKED DRAFTS
			N	N	N		

RAW MATERIAL	MATERIAL NORM	NET WEIGHT	VOLUME	AREA

CREATED	MODIFIED	APPROVED
Derek	DEREK	Hanks

ECN NUMBER	ECN DATE	PRODUCT	DRAWING FILE
	2021-9-07	ZENITH ZBTS T-SERIES	SEQUENCE OF OPERATION

ORGANIZATION	DEPARTMENT	TOLERANCES
Smart Power Business Line	RD Center CN	

TITLE (ZH)	TYPE	SCALE	FORMAT	LANGUAGE	SHEET
		NA	A3	EN/ZH	3/16

TITLE (EN)	DOC. NO.	REV.
ZBTS 1600-3000A	2TFM360001A1001	A

ABB

Rev	Description
A	First Release

Proprietary and Secret Information
We reserve all rights in this document and in the information contained therein. Reproduction,use or disclosure to third parties without express authority is strictly forbidden.Copyright ©2019 ABB.
保密文件经手人赋有保密义务;未经授权而披露,权利人享有追偿权利!

MECHANICAL LAYOUT FOR ATS

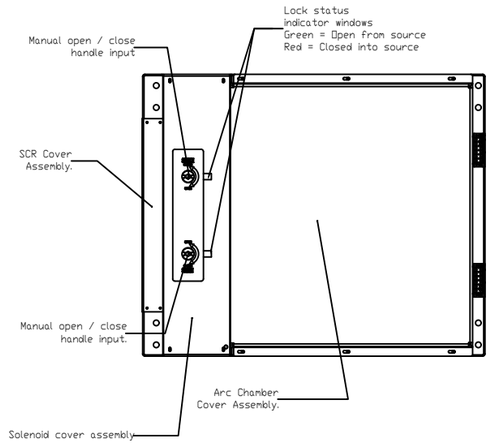

ATS - 4 POLE OPEN TRANSITION. FULL ASSEMBLY.

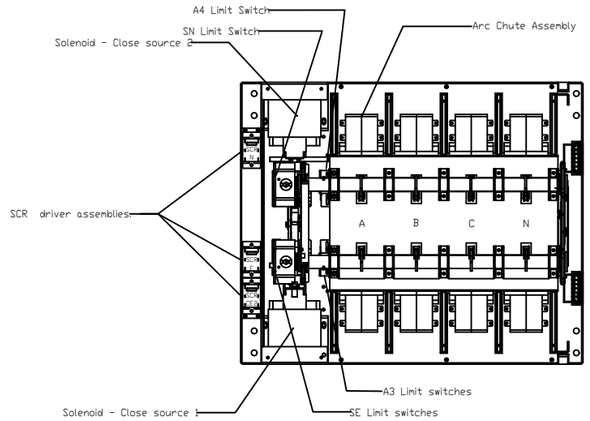

ATS - 4 POLE OPEN TRANSITION. COVERS REMOVED

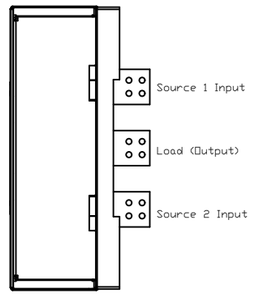

ATS - 4 POLE OPEN TRANSITION. SIDE VIEW

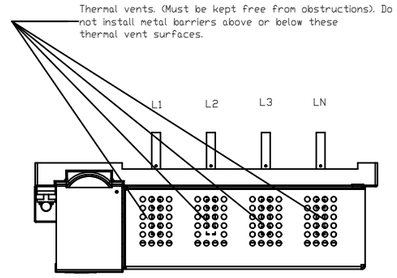

ATS - 4 POLE OPEN TRANSITION. TOP VIEW

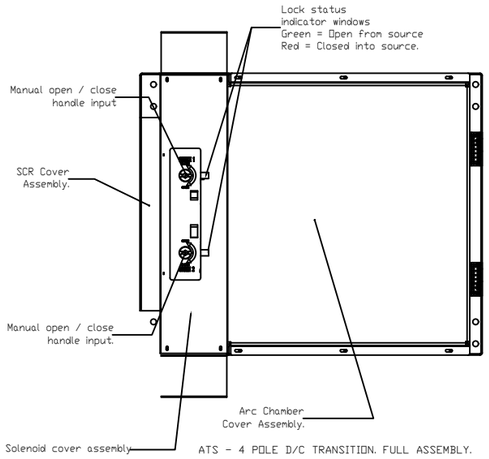

ATS - 4 POLE D/C TRANSITION. FULL ASSEMBLY.

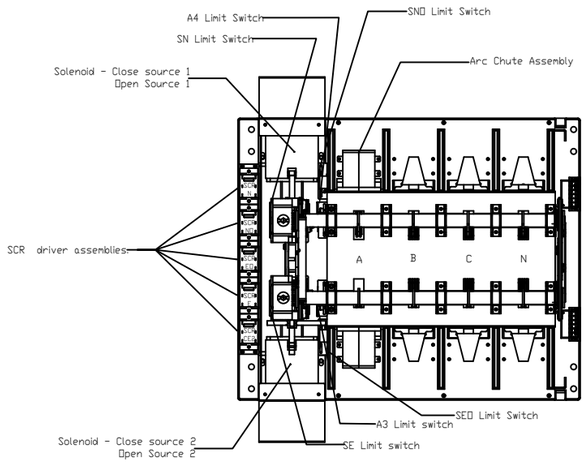

ATS - 4 POLE D/C . COVERS REMOVED

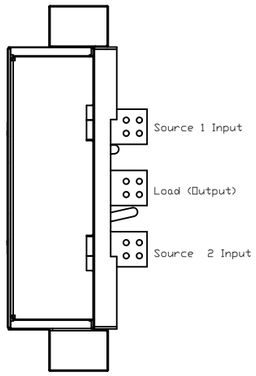

ATS - 4 POLE D/C TRANSITION. SIDE VIEW

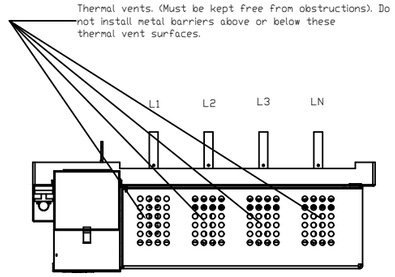

ATS - 4 POLE D/C TRANSITION. TOP VIEW

NOTE:

THIS MECHANICAL LAYOUT ONLY SHOWN AS 4 POLES. THE 3 POLES ATS KEEP THE SAME SIZE WITH 4 POLES ATS, ONLY REMOVE N POLE FROM 4 POLES ATS

*FUNCTIONAL DIMENSIONS (Fo) (Fi) (Fc)

	SURFACE	TOOL	QPS	FTS	VTP	UNMARKED ROUNDINGS	UNMARKED DRAFTS
			N	N	N		
RAW MATERIAL		MATERIAL NORM	NET WEIGHT			VOLUME	AREA
CREATED		MODIFIED				APPROVED	
Derek		DEREK				Hanks	
ECN NUMBER	ECN DATE	PRODUCT				DRAWING FILE	
	2021-9-07	ZENITH ZBTS T-SERIES				MECHANICAL LAYOUT FOR ATS	
ORGANIZATION		DEPARTMENT				TOLERANCES	
Smart Power Business Line		RD Center CN					

	TITLE (ZH)	TYPE	SCALE	FORMAT	LANGUAGE	SHEET
ABB			NA	A3	EN/ZH	4/16
	TITLE (EN)	DOC. NO.				REV.
	ZBTS 1600-3000A	2TFM360001A1001				A

Proprietary and Secret Information

We reserve all rights in this document and in the information contained therein. Reproduction,use or disclosure to third parties without express authority is strictly forbidden.Copyright ©2019 ABB.

保密文件经手人赋有保密义务;未经授权而披露,权利人享有追偿权利!

Rev	Description
A	First Release

MECHANICAL LAYOUT FOR BYPASS

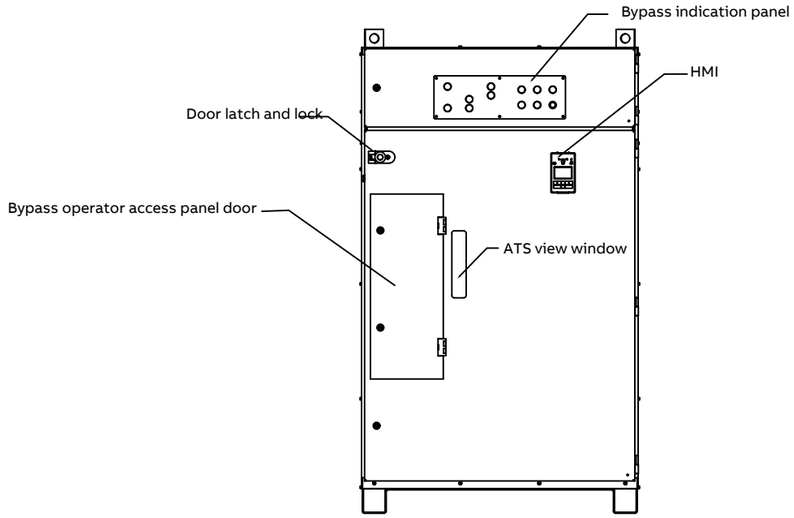

Front view (Door close ,4P)

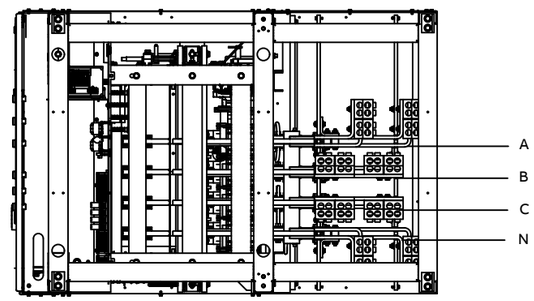

Top view (Panel remove ,4P)

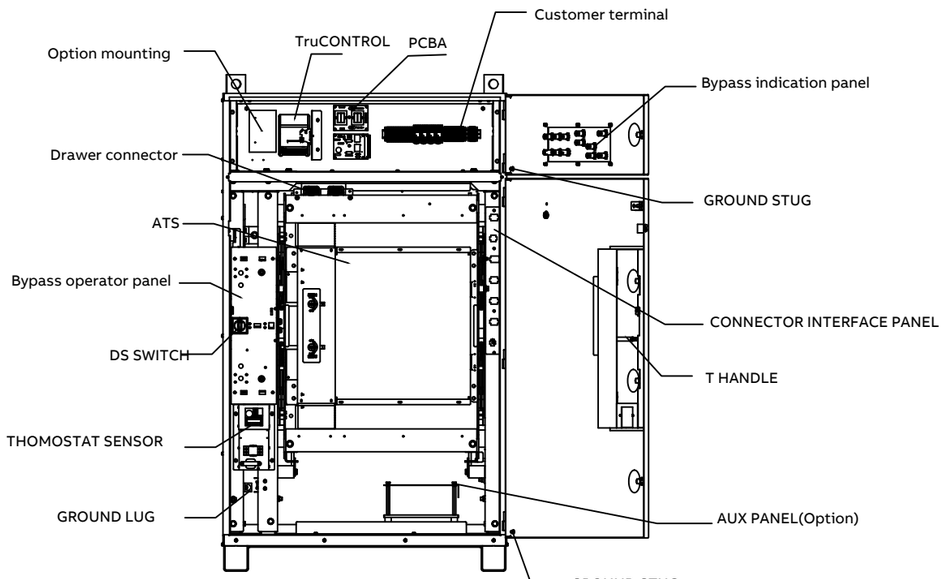

Front view (Door open, 4P)

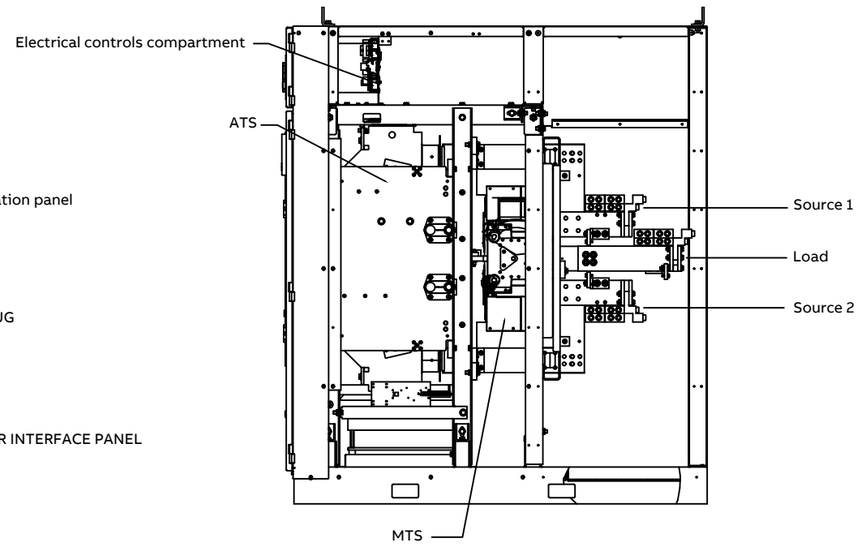

Right view (Panel remove ,4P)

NOTE:
THIS MECHANICAL LAYOUT ONLY SHOWN AS 4 POLES. THE 3 POLES BYPASS KEEP THE SAME SIZE WITH 4 POLES BYPASS, ONLY REMOVE LN POLE FROM 4 POLES BYPASS

Proprietary and Secret Information

We reserve all rights in this document and in the information contained therein. Reproduction,use or disclosure to third parties without express authority is strictly forbidden.Copyright ©2019 ABB.
保密文件经手人赋有保密义务;未经授权而披露,权利人享有追偿权利!

*FUNCTIONAL DIMENSIONS (Fo) (Fi) (Fc)

	SURFACE	TOOL	QPS	FTS	VTP	UNMARKED ROUNDINGS	UNMARKED DRAFTS
			N	N	N		
RAW MATERIAL		MATERIAL NORM	NET WEIGHT			VOLUME	AREA
CREATED		MODIFIED				APPROVED	
Derek		DEREK				Hanks	
ECN NUMBER	ECN DATE	PRODUCT				DRAWING FILE	
	2021-9-07	ZENITH ZBTS T-SERIES				MECHANICAL LAYOUT FOR BYP	
ORGANIZATION		DEPARTMENT				TOLERANCES	
Smart Power Business Line		RD Center CN					

	TITLE (ZH)	TYPE	SCALE	FORMAT	LANGUAGE	SHEET
ABB			NA	A3	EN/ZH	5/16
	TITLE (EN) ZBTS 1600-3000A	DOC. NO. 2TFM360001A1001				REV. A

Rev	Description
A	First Release

ATS TruControl PANEL

ABB Zenith TruControl is a fully integrated electrical module that has no field replaceable components. Units that are not operating as intended will require complete replacement. Any attempts to perform hardware repair or maintenance of internal components is not recommended.

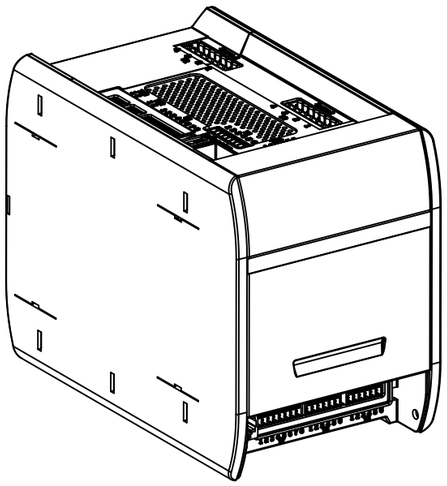

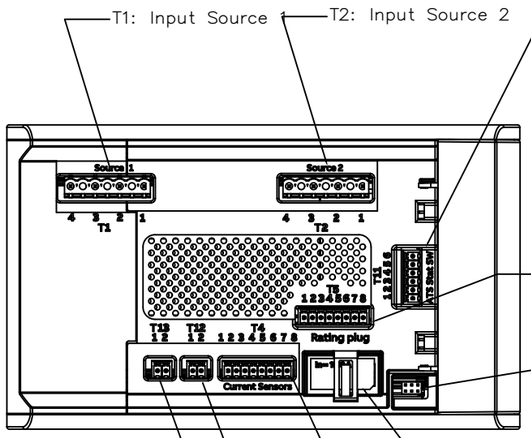

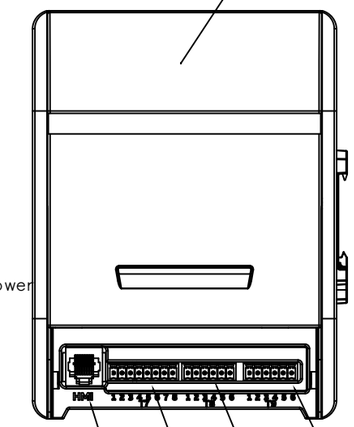

STANDARD PLUG CONNECTION SCHEME

T1 – Source 1

4						1
23		22		21		20

T2 – Source 2

4						1
33		32		31		30

T4: Current Sensors

1							8
IL1	IL1	IL2	IL2	IL3	IL3	INE	INE

T5: ATS command out

1							8
808	901	900	908	801	800	453B	

T7 – DIGITAL OUTPUT

1							8
80	74	80	75	80	63	80	64

T8 – GEN 1, GEN 2

1					6
			13	E12	11

T9 – FIRE FIGHT AND DIGITAL INPUT

1					6
		65	66	67	73

T11 – ATS STAT SW

1					6
26	35B	36	25B	25ZZ	25ZA

T13: EKIP 10K

1	2
W3	W4

T12: PT1000

1	2
PT+	PT–
Red	White

NOTE:
PROGRAM THE INPUTS AND OUTPUT FEATURES AS BELOW FUCNTIONS.
OUTPUT 1 = CONFIGURE THE OUTPUT FOR "ATS IN POSITION I" "N.O." CONTACT.
OUTPUT 2 = CONFIGURE THE OUTPUT FOR "ATS IN POSITION II" "N.O." CONTACT.
OUTPUT 3 = CONFIGURE THE OUTPUT FOR "SOURCE I AVAILBLE" "N.O." CONTACT.
OUTPUT 4 = CONFIGURE THE OUTPUT FOR "SOURCE II AVAILBLE" "N.O." CONTACT.
INPUT 1 = CONFIGURE THE INPUT FOR "REMOTE CONTROL TO I" "N.O." CONTACT.
INPUT 2 = CONFIGURE THE INPUT FOR "REMOTE CONTROL TO II" "N.O." CONTACT.
INPUT 3 = CONFIGURE THE INPUT FOR "MANUAL–AUTO MODE" "N.O." CONTACT.

COLOR	SURFACE	TOOL	QPS	FTS	VTP	UNMARKED ROUNDINGS	UNMARKED DRAFTS
			N	N	N		
RAW MATERIAL		MATERIAL NORM	NET WEIGHT			VOLUME	AREA
CREATED: DEREK		MODIFIED: DEREK				APPROVED: Hanks	
ECN NUMBER	ECN DATE: 2021–9–07	PRODUCT: ZENITH ZBTS T–SERIES				DRAWING FILE: ATS TruControl PANEL	
ORGANIZATION: Smart Power Business Line		DEPARTMENT: RD Center CN				TOLERANCES	
ABB	TITLE (ZH)		TYPE	SCALE: NA	FORMAT: A3	LANGUAGE: EN/ZH	SHEET: 6/16
	TITLE (EN): ZBTS 1600–3000A		DOC. NO.: 2TFM360001A1001				REV.: A

Proprietary and Secret Information
We reserve all rights in this document and in the information contained therein. Reproduction,use or disclosure to third parties without express authority is strictly forbidden.Copyright ©2019 ABB.
保密文件经手人赋有保密义务;未经授权而披露,权利人享有追偿权利!

Rev	Description
A	First release

BYPASS CONTROL PANEL

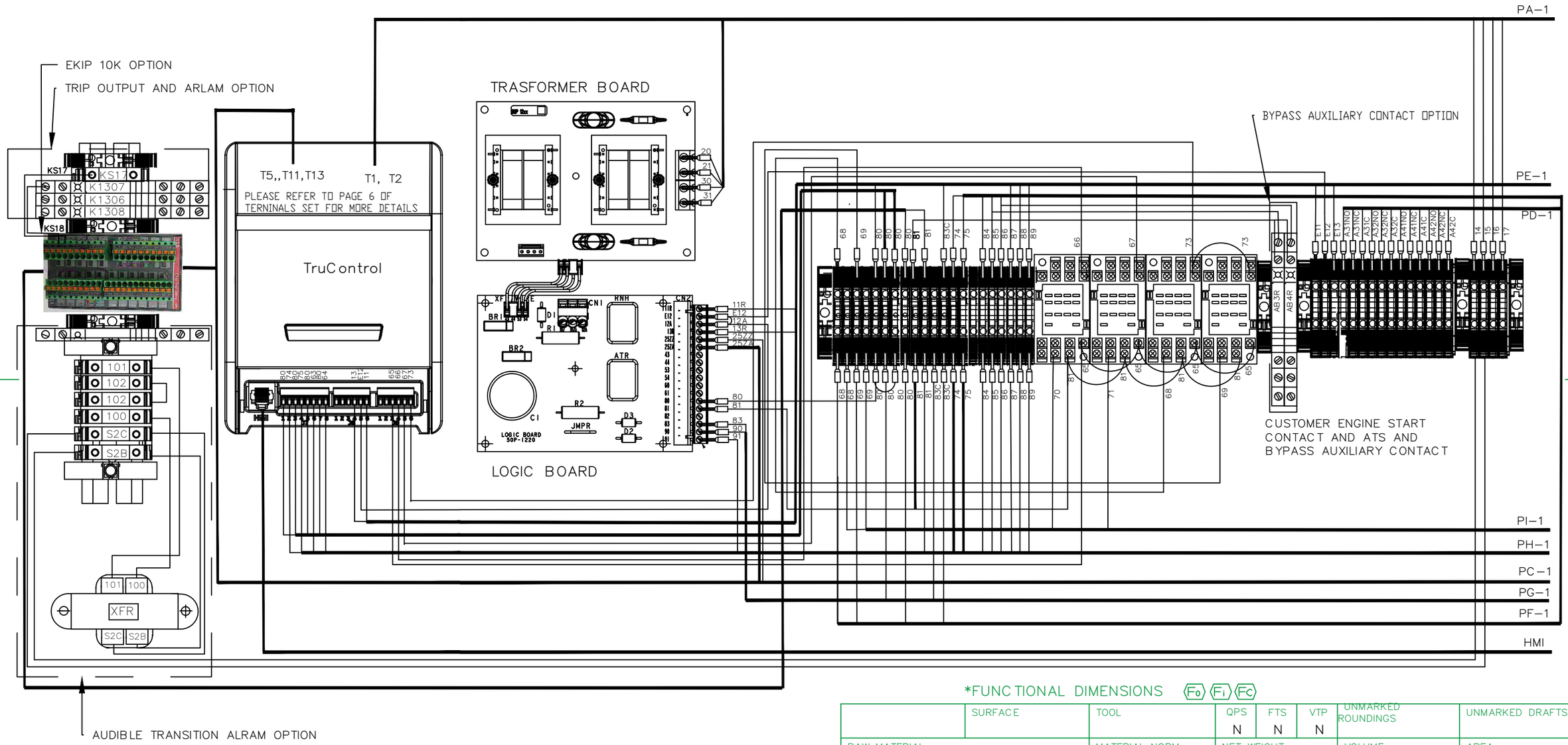

*FUNCTIONAL DIMENSIONS Fo Fi Fc

	SURFACE	TOOL	QPS	FTS	VTP	UNMARKED ROUNDINGS	UNMARKED DRAFTS
			N	N	N		

RAW MATERIAL	MATERIAL NORM	NET WEIGHT	VOLUME	AREA

CREATED	MODIFIED	APPROVED
Derek	DEREK	Hanks

ECN NUMBER	ECN DATE	PRODUCT	DRAWING FILE
	2021-9-07	ZENITH ZBTS T-SERIES	BYPASS CONTROL PANEL

ORGANIZATION	DEPARTMENT	TOLERANCES
Smart Power Business Line	RD Center CN	

TITLE (ZH)	TYPE	SCALE	FORMAT	LANGUAGE	SHEET
		NA	A3	EN/ZH	7/16

TITLE (EN)	DOC. NO.	REV.
ZENITH ZBTS(R5B) ELEC DIAGRAM	2TFM360001A1001	A

Proprietary and Secret Information

We reserve all rights in this document and in the information contained therein. Reproduction,use or disclosure to third parties without express authority is strictly forbidden.Copyright ©2019 ABB.

保密文件经手人赋有保密义务;未经授权而披露,权利人享有追偿权利!

Rev	Description
A	DESCRIPTION1

PRIMARY CIRCUIT–ATS AND BYP SCHEMATIC

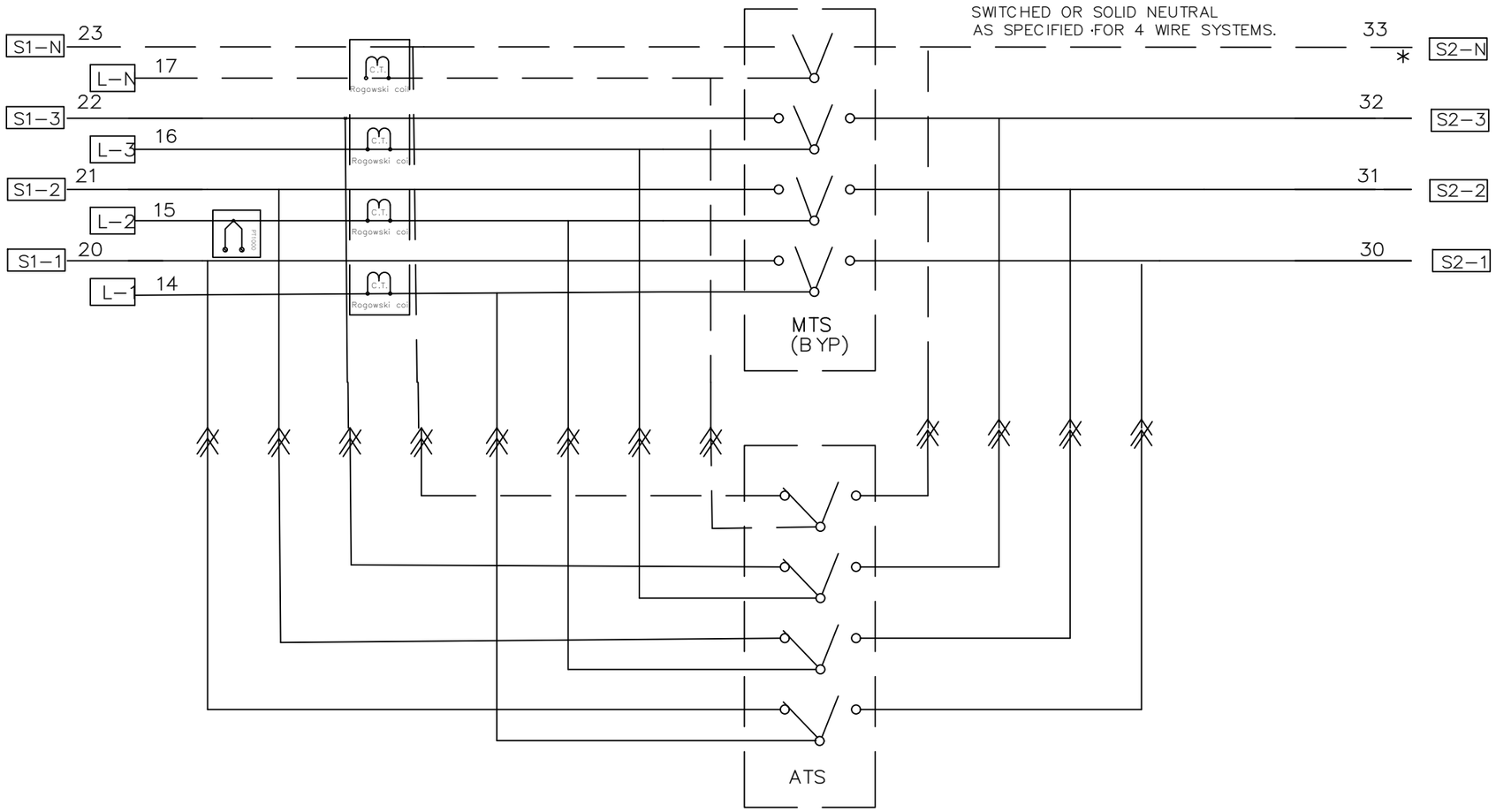

*FUNCTIONAL DIMENSIONS (Fo) (Fi) (Fc)

CLUSTERS

	SURFACE	TOOL	QPS	FTS	VTP	UNMARKED ROUNDINGS	UNMARKED DRAFTS
			N	N	N		

RAW MATERIAL	MATERIAL NORM	NET WEIGHT	VOLUME	AREA

CREATED	MODIFIED	APPROVED
DEREK	DEREK	Hanks

ECN NUMBER	ECN DATE	PRODUCT	DRAWING FILE
	2021–9–07	ZENITH ZBTS T–SERIES	PRIMARY CIRCUIT

ORGANIZATION	DEPARTMENT	TOLERANCES
Smart Power Business Line	RD Center CN	

TITLE (ZH)	TYPE	SCALE	FORMAT	LANGUAGE	SHEET
		NA	A3	EN/ZH	8/16

TITLE (EN)	DOC. NO.	REV.
ZBTS 1600–3000A	2TFM360001A1001	A

Proprietary and Secret Information

We reserve all rights in this document and in the information contained therein. Reproduction,use or disclosure to third parties without express authority is strictly forbidden.Copyright ©2019 ABB.

保密文件经手人赋有保密义务;未经授权而披露,权利人享有追偿权利!

Rev	Description
A	First release

ATS CONNECTION

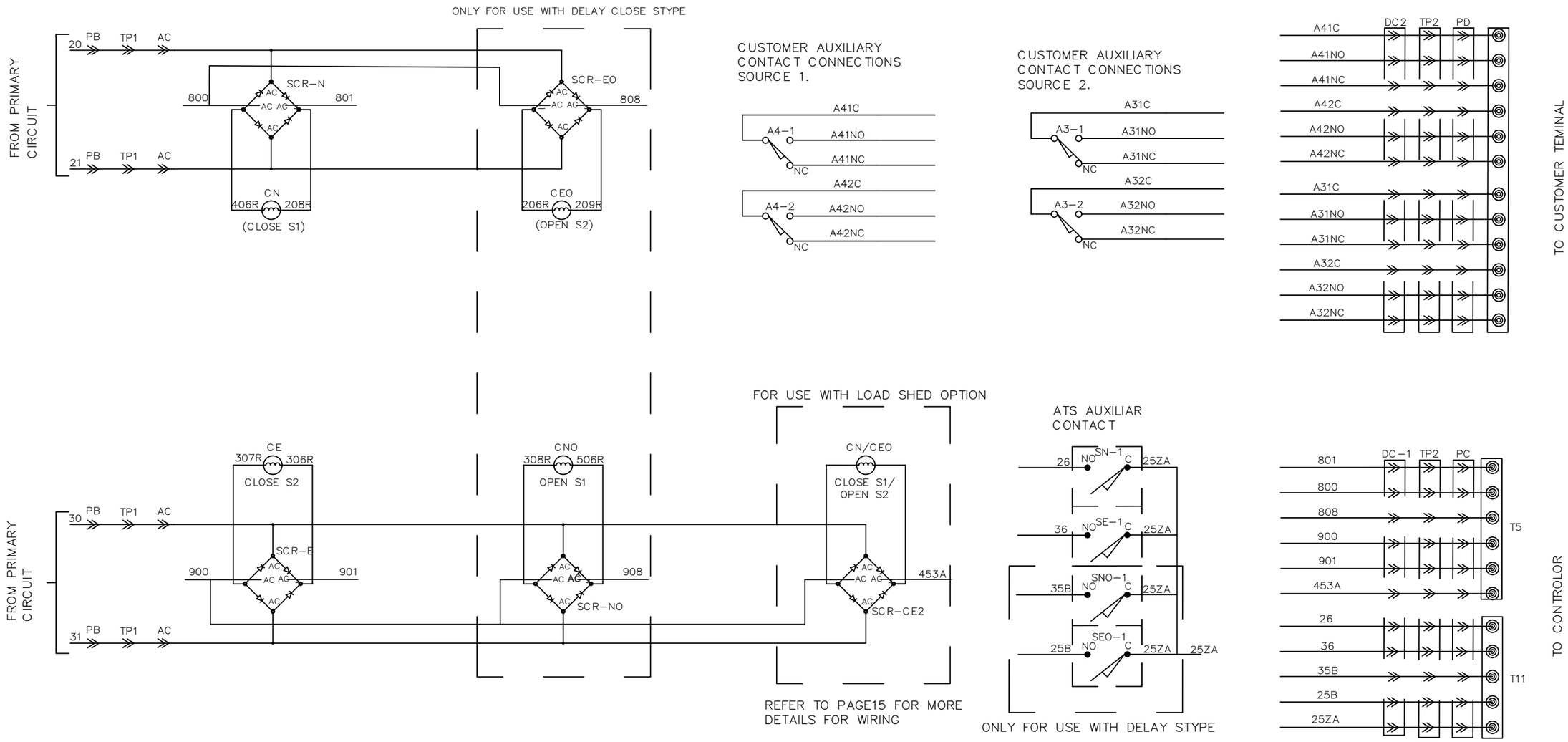

AUTOMATIC TRANSFER SWITCH
LIMIT SWITCH ACTUATION CHART

X = ACTUATED	ATS CONTACT LOCATION		
	SOURCE 1	OPEN	SOURCE 2
SN-1	X		
SNO-1		X	X
SEO-1	X	X	
SE-1			X

≫ – CONNECTOR ◎ –TERMINALS

*FUNCTIONAL DIMENSIONS Fo Fi Fc

	SURFACE	TOOL	QPS	FTS	VTP	UNMARKED ROUNDINGS	UNMARKED DRAFTS
			N	N	N		
RAW MATERIAL		MATERIAL NORM	NET WEIGHT			VOLUME	AREA
CREATED: DEREK		MODIFIED: DEREK				APPROVED: Hanks	
ECN NUMBER	ECN DATE: 2021-9-07	PRODUCT: ZENITH ZBTS T-SERIES				DRAWING FILE: ATSE CONNECTION	
ORGANIZATION: Smart Power Business Line		DEPARTMENT: RD Center CN				TOLERANCES	
ABB	TITLE (ZH)		TYPE	SCALE: NA	FORMAT: A3	LANGUAGE: EN/ZH	SHEET: 9/16
	TITLE (EN): ZBTS 1600-3000A		DOC. NO.: 2TFM360001A1001				REV.: A

Proprietary and Secret Information
We reserve all rights in this document and in the information contained herein. Reproduction,use or disclosure to third parties without express authority is strictly forbidden.Copyright ©2019 ABB.
此密文件经手人赋有保密义务;未经授权而披露,权利人享有追偿权利!

Rev	Description
A	First release

BYPASS POWER SUPPLY AND EKIP 10K

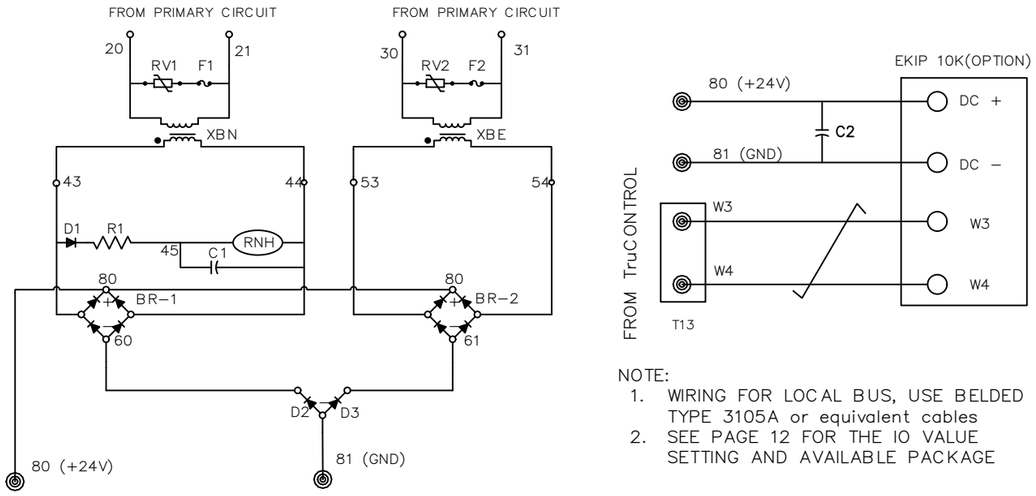

NOTE:
1. WIRING FOR LOCAL BUS, USE BELDED TYPE 3105A or equivalent cables
2. SEE PAGE 12 FOR THE IO VALUE SETTING AND AVAILABLE PACKAGE

CONTACT SET AND DS SWITCH CIRCUIT

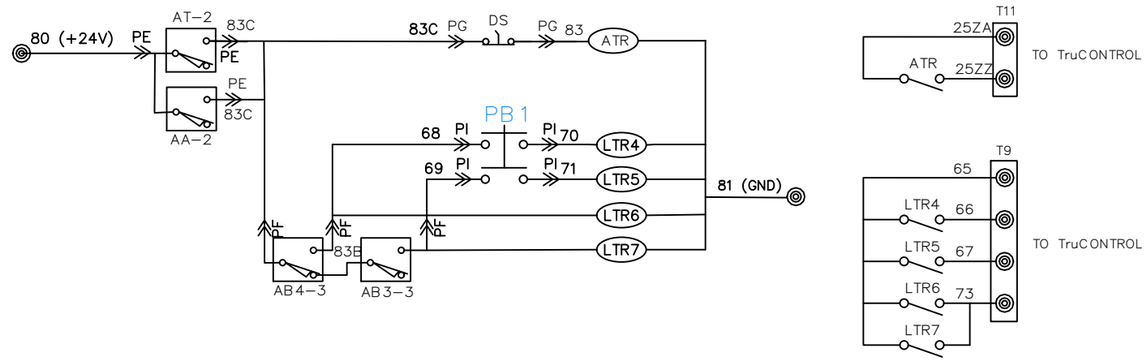

BYPASS LIGHT CIRCUIT

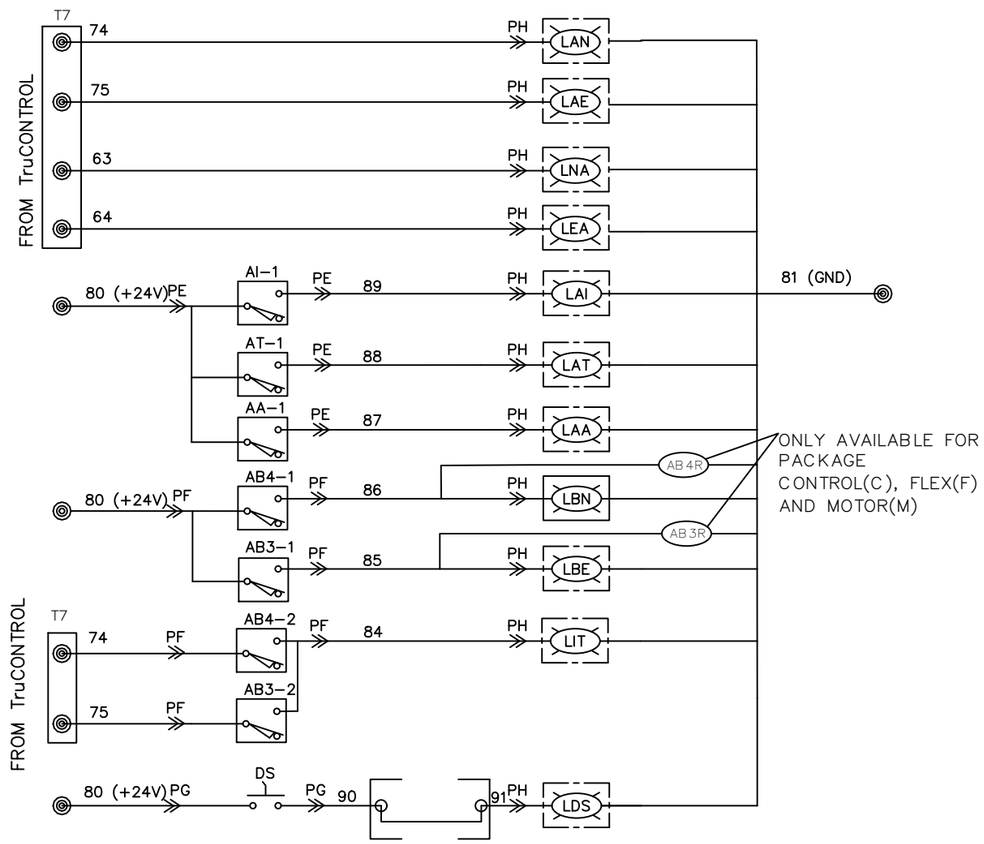

ENGINE START CIRCUIT

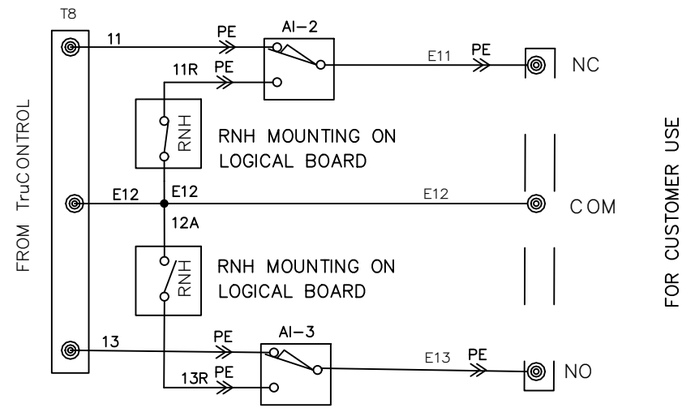

NOTE:
1. GEN2 AND RNH SHOWN IN SOURCE 1 NOT AVAILABLE
2. PROGRAM Tru-CONTROL "APPLICATION" AS "S1-TRANS/S2-GEN"

*FUNCTIONAL DIMENSIONS (Fo) (Fi) (Fc)

	SURFACE	TOOL	QPS	FTS	VTP	UNMARKED ROUNDINGS	UNMARKED DRAFTS
			N	N	N		
RAW MATERIAL		MATERIAL NORM	NET WEIGHT			VOLUME	AREA
CREATED		MODIFIED				APPROVED	
DEREK		DEREK				Hanks	
ECN NUMBER	ECN DATE	PRODUCT				DRAWING FILE	
	2021-9-07	ZENITH ZBTS T-SERIES				BYPASS CONNECTION	
ORGANIZATION		DEPARTMENT				TOLERANCES	
Smart Power Business Line		RD Center CN					

	TITLE (ZH)	TYPE	SCALE	FORMAT	LANGUAGE	SHEET
ABB			NA	A3	EN/ZH	10/16
	TITLE (EN)	DOC. NO.				REV.
	ZBTS 1600-3000A	2TFM360001A1001				A

Proprietary and Secret Information

We reserve all rights in this document and in the information contained therein. Reproduction,use or disclosure to third parties without express authority is strictly forbidden.Copyright ©2019 ABB.

保密文件经手人赋有保密义务;未经授权而披露,权利人享有追偿权利!

≫ – CONNECTOR ◎ – TERMINALS

Rev	Description
A	First Release

CUSTOMER ENGINE START CONTACT AND ATS AUXILIARY CONTACT

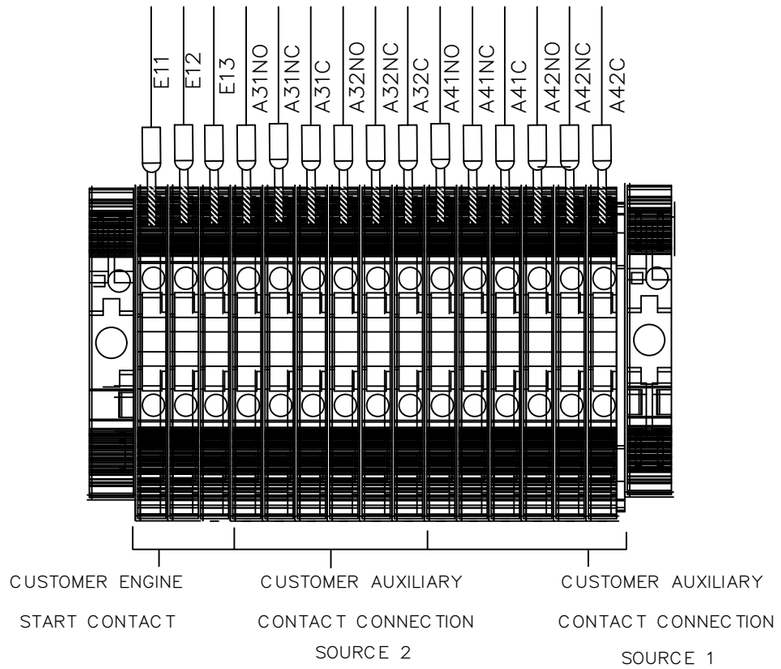

ENGINE START CONTACT	SOURCE 1 AVAILABLE	SOURCE 1 NOT AVAILABLE	CABLING	RATING
E11 & E12	OPEN	CLOSE	0.75...2.5mm2 18...12 AWG	5A@250V AC,5A@30V DC
E13 & E12	CLOSE	OPEN	0.75...2.5mm2 18...12 AWG	5A@250V AC,5A@30V DC

AUTOMATIC TRANSFER SWITCH LIMIT SWITCH ACTUATION CHART

X = ACTUATED	ATS CONTACT LOCATION			CABLING	RATING
	SOURCE 1	OPEN	SOURCE 2		
A3-1,2			X	0.75...2.5mm^2 18...12 AWG	10A @ 250V AC, 250mA @ 250 DC
A4-1,2	X			0.75...2.5mm^2 18...12 AWG	10A @ 250V AC, 250mA @ 250 DC

NOTE:

1. PROGRAM "APPLICATION" ="S1-transf/S2-gen"
2. ENGINE CONTROL BY CONTROLLER WHEN ATS IN CONNECT AND TEST POSITION; ENGINE CONTROL BY RNH WHEN ATS IN ISALATED POSITIOIN
3. NO=NORMAL OPEN; NC=NORMAL CLOSE; C/COM=COMMON PORT

CUSTOMER EKIP MOUDES – INPUT/OUTPUT

ABB Zenith Bypass Isolation Automatic Transfer Switching Equipment makes use of ABB Ekip Connect option modules. Please refer to the ABB TruControl and EKIP 10K Operation and Maintenance Guide for detailed part numbers, operation and settings description for each, and related software for ease of programming.

I/O MODULES	OUTPUT	INPUT	CABLING
EKIP2K	2 A @ 30 V DC, 0.8 A @ 50 V DC, 0.2 A @ 150 V DC, 4 A @ 250 V A)	5 V@2.5 mA Do not connect to any power supply	08...1.5 mm^2 28...16 AWG"
EKIP10K			

NOTE:
The value of Input/Output, pls refer to Page 12 for more details.

CUSTOMER FIRE FIGHTING

	FIRE FIGHTING	TERMINER	CABLING	REMARK
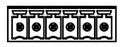	Fire fighting input 24 Vdc (+)	T9-1	08...1.5 mm^2 28...16 AWG"	Only in I-O-II
	Fire fighting input 24 Vdc (–)	T9-2		

*FUNCTIONAL DIMENSIONS Fo Fi Fc

SURFACE	TOOL	QPS	FTS	VTP	UNMARKED ROUNDINGS	UNMARKED DRAFTS
		N	N	N		

RAW MATERIAL	MATERIAL NORM	NET WEIGHT	VOLUME	AREA

CREATED	MODIFIED	APPROVED
DEREK	DEREK	Hanks

ECN NUMBER	ECN DATE	PRODUCT	DRAWING FILE
	2021-9-07	ZENITH ZBTS T-SERIES	CUSTOMER I/O DIAGRAM

ORGANIZATION	DEPARTMENT	TOLERANCES
Smart Power Business Line	RD Center CN	

TITLE (ZH)	TYPE	SCALE	FORMAT	LANGUAGE	SHEET
		NA	A3	EN/ZH	11/16

TITLE (EN)	DOC. NO.	REV.
ZBTS 1600-3000A	2TFM360001A1001	A

Rev	Description
A	First release

Proprietary and Secret Information

We reserve all rights in this document and in the information contained therein. Reproduction,use or disclosure to third parties without express authority is strictly forbidden.Copyright ©2019 ABB.
保密文件经手人赋有保密义务;未经授权而披露,权利人享有追偿权利!

INPUT/OUTPUT PACKAGES PROGRAMMING

ABB Zenith Bypass Isolation Automatic Transfer Switching Equipment has 5 Input/Output packages— Base, Plus, Controls, Flex, Motor and makes use of ABB Ekip Connect option modules. Please refer to the ABB TruControl and EKIP 10K Operation and Maintenance Guide for detailed part numbers, operation and settings description for each, and related software for ease of programming.The value of IO is refer to below table.

		Open					Delay/Close				
		Base (B)	Plus (P)	Controls (C)	Flex (F)	Motor (M)	Base (B)	Plus (P)	Controls (C)	Flex (F)	Motor (M)
Field		Value	Value	Value	Value	Value	Value	Value	Value	Value	Value
Ekip 2k-1	I11	No Function	Test on Load (for Switch)	not available	not available	not available	not available	not available	not available	not available	not available
Ekip 2k-1	I12	No Function	Test off Load (for Switch)	not available	not available	not available	not available	not available	not available	not available	not available
Ekip 2k-2	I21	not available	Remote Test on Load/Peak Shave	not available	not available	not available	not available	not available	not available	not available	not available
Ekip 2k-2	I22	not available	Remote Inhibit ATS (for Switch)	not available	not available	not available	not available	not available	not available	not available	not available
Ekip 2k-3	I31	not available	not available	not available	not available	not available	not available	not available	not available	not available	not available
Ekip 2k-3	I32	not available	not available	not available	not available	not available	not available	not available	not available	not available	not available
Ekip 10k	I101	not available	not available	Remote Inhibit ATS	Test on Load (for Switch)	Test on Load (for Switch)	No Function	Test on Load (for Switch)	Remote Inhibit ATS	Test on Load (for Switch)	Test on Load (for Switch)
Ekip 10k	I102	not available	not available	Remote Bypass Running Time Delays	Test off Load (for Switch)	Test off Load (for Switch)	No Function	Test off Load (for Switch)	Remote Bypass Running Time Delays	Test off Load (for Switch)	Test off Load (for Switch)
Ekip 10k	I103	not available	not available	Remote Test on Load/Peak Shave	Remote Test on Load/Peak Shave	Remote Test on Load/Peak Shave	not available	Remote Test on Load/Peak Shave	Remote Test on Load/Peak Shave	Remote Test on Load/Peak Shave	Remote Test on Load/Peak Shave
Ekip 10k	I104	not available	not available	Remote Manual Re-Transfer	Remote Manual Re-Transfer	Remote Manual Re-Transfer	not available	Remote Inhibit ATS (for Switch)	Remote Manual Re-Transfer	Remote Manual Re-Transfer	Remote Manual Re-Transfer
Ekip 10k	I105	not available	not available	Load Shed Input Signal	Load Shed Input Signal	Load Shed Input Signal	not available	not available	Load Shed Input Signal	Load Shed Input Signal	Load Shed Input Signal
Ekip 10k	I106	not available	not available	Remote Inhibit Transfer to non-priority	Remote Inhibit ATS (for Switch)	Remote Inhibit Transfer to non-priority	not available	not available	Remote Inhibit Transfer to non-priority	Remote Inhibit ATS (for Switch)	Remote Inhibit Transfer to non-priority
Ekip 10k	I107	not available	not available	not available	not available	Remote Inhibit ATS	not available	not available	not available	not available	Remote Inhibit ATS
Ekip 10k	I108	not available	not available	not available	not available	Remote Inhibit ATS (for Switch)	not available	not available	not available	not available	Remote Inhibit ATS (for Switch)
Ekip 10k	I109	not available	not available	not available	not available	No function	not available	not available	not available	not available	No function
Ekip 10k	I110	not available	not available	not available	not available	No function	not available	not available	not available	not available	No function
Ekip 2k-1	O11	No function	Transfer Alarm	not available	not available	not available	not available	not available	not available	not available	not available
Ekip 2k-1	O12	No function	S1 Available/Not Available Indication	not available	not available	not available	not available	not available	not available	not available	not available
Ekip 2k-3	O21	not available	S2 Available/Not Available Indication	not available	not available	not available	not available	not available	not available	not available	not available
Ekip 2k-3	O22	not available	No function	not available	not available	not available	not available	not available	not available	not available	not available
Ekip 2k-3	O31	not available	not available	not available	not available	not available	not available	not available	not available	not available	not available
Ekip 2k-3	O32	not available	not available	not available	not available	not available	not available	not available	not available	not available	not available
Ekip 10k	O101	not available	not available	Transfer Alarm	Transfer Alarm	Transfer Alarm	No function	Transfer Alarm	Transfer Alarm	Transfer Alarm	Transfer Alarm
Ekip 10k	O102	not available	not available	S1 Available/Not Available Indication	S1 Available/Not Available Indication	S1 Available/Not Available Indication	No function	S1 Available/Not Available Indication	S1 Available/Not Available Indication	S1 Available/Not Available Indication	S1 Available/Not Available Indication
Ekip 10k	O103	not available	not available	S2 Available/Not Available Indication	S2 Available/Not Available Indication	S2 Available/Not Available Indication	No function	S2 Available/Not Available Indication	S2 Available/Not Available Indication	S2 Available/Not Available Indication	S2 Available/Not Available Indication
Ekip 10k	O104	not available	not available	Elevator Pre-Transfer Signal	Elevator Pre-Transfer Signal	Elevator Pre-Transfer Signal	No function	No function	Elevator Pre-Transfer Signal	Elevator Pre-Transfer Signal	Load Disconnected Indication
Ekip 10k	O105	not available	not available	Pre-Transfer Signal	Pre-Transfer Signal	Elevator Pre-Transfer Signal	No function	No function	Pre-Transfer Signal	Pre-Transfer Signal	Elevator Pre-Transfer Signal
Ekip 10k	O106	not available	not available	No function	No function	Pre-Transfer Signal	No function	No function	No function	No function	Pre-Transfer Signal
Ekip 10k	O107	not available	not available	not available	not available	Pre-Transfer Signal	No function	No function	No function	No function	Pre-Transfer Signal
Ekip 10k	O108	not available	not available	SCR Signal (load shed)	SCR Signal (load shed)	SCR Signal (load shed)	No function	No function	SCR Signal (load shed)	SCR Signal (load shed)	SCR Signal (load shed)
Ekip 10k	O109	not available	not available	not available	not available	Load Disconnected Indication	Extended Parallel Trip Output	Extended Parallel Trip Output	Extended Parallel Trip Output	Extended Parallel Trip Output	Extended Parallel Trip Output
Ekip 10k	O110	not available	not available	not available	not available	No function	Extended Parallel Alarm	Extended Parallel Alarm	Extended Parallel Alarm	Extended Parallel Alarm	Extended Parallel Alarm

NOTE:

1. PROGRAM THE INPUTS AND OUTPUT FEATURES AS "N.O." CONTACT.
2. The fecture of Extended Parallel Trip Output/Extended Parallel Alarm is only used for Close type, no used for Delay type.

Proprietary and Secret Information

We reserve all rights in this document and in the information contained therein. Reproduction,use or disclosure to third parties without express authority is strictly forbidden.Copyright ©2019 ABB.
保密文件经手人赋有保密义务;未经授权而披露,权利人享有追偿权利!

*FUNCTIONAL DIMENSIONS Fo Fi Fc

	SURFACE	TOOL	QPS N	FTS N	VTP N	UNMARKED ROUNDINGS	UNMARKED DRAFTS
RAW MATERIAL		MATERIAL NORM	NET WEIGHT			VOLUME	AREA
CREATED DEREK		MODIFIED DEREK				APPROVED Hanks	
ECN NUMBER	ECN DATE 2021-9-07	PRODUCT ZENITH ZBTS T-SERIES				DRAWING FILE CUSTOMER I/O DIAGRAM	
ORGANIZATION Smart Power Business Line		DEPARTMENT RD Center CN				TOLERANCES	
ABB	TITLE (ZH)		TYPE	SCALE NA	FORMAT A3	LANGUAGE EN/ZH	SHEET 12/16
	TITLE (EN) ZBTS 1600-3000A		DOC. NO. 2TFM360001A1001				REV. A

Rev	Description
A	First release

WIRE NUM OF CONNECTOR

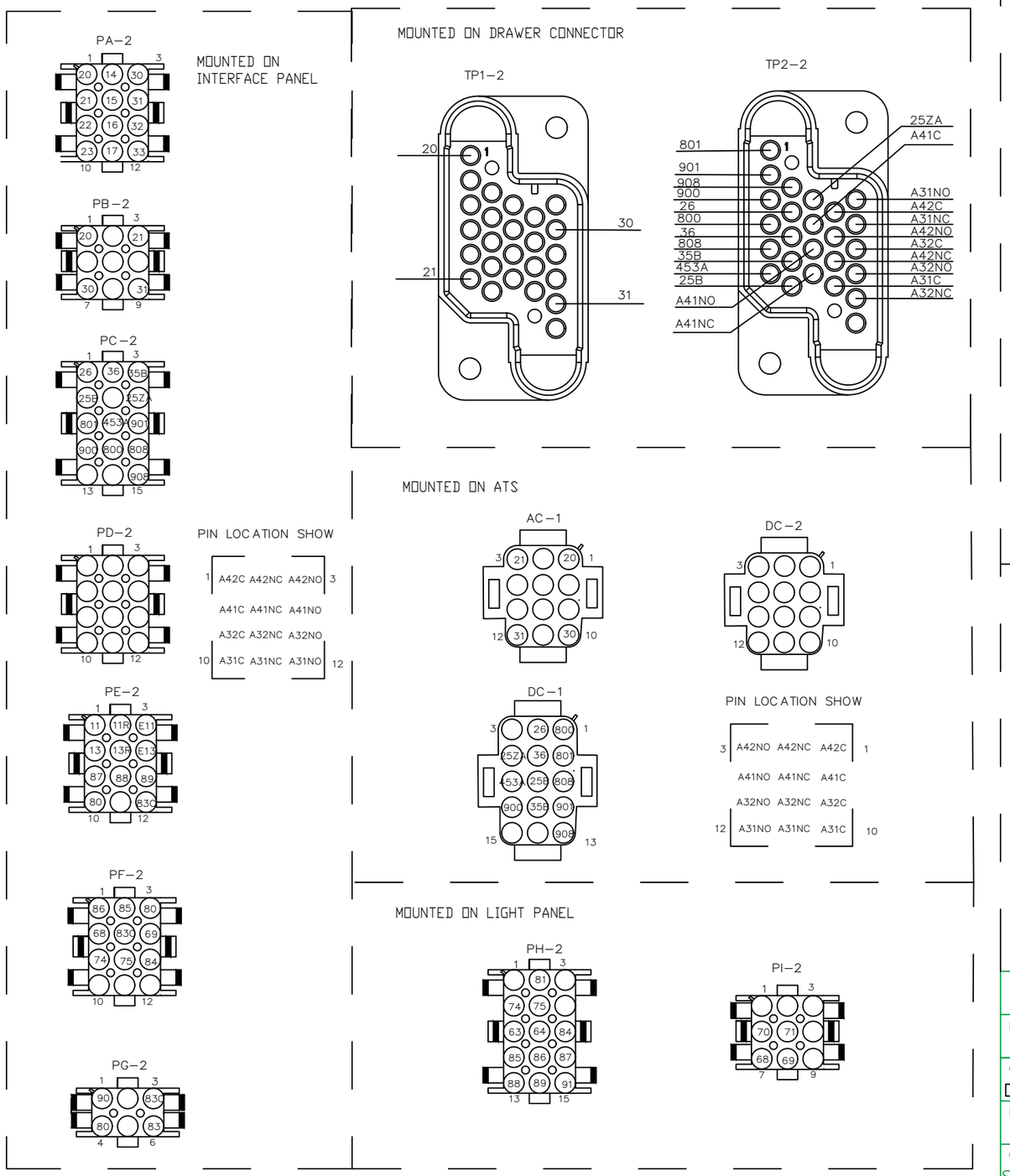

WIRE NUM OF MICROSWITCH AND DS SWITCH

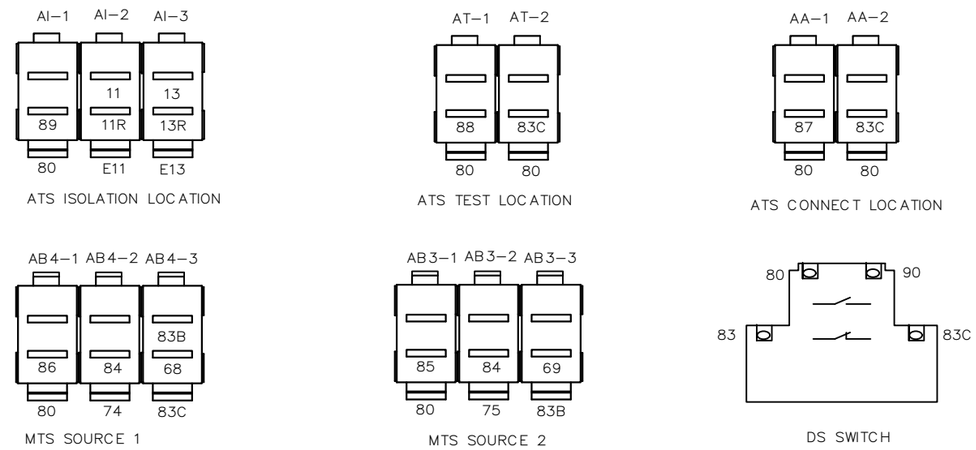

WIRE NUM OF BYPASS LIGHT PANEL

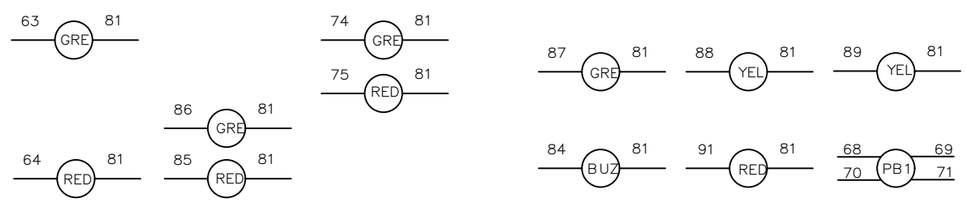

*FUNCTIONAL DIMENSIONS Fo Fi Fc

	SURFACE	TOOL	QPS	FTS	VTP	UNMARKED ROUNDINGS	UNMARKED DRAFTS
			N	N	N		

RAW MATERIAL	MATERIAL NORM	NET WEIGHT	VOLUME	AREA

CREATED	MODIFIED	APPROVED
Derek	DEREK	Hanks

ECN NUMBER	ECN DATE	PRODUCT	DRAWING FILE
	2021-9-07	ZENITH ZBTS T-SERIES	WRIE NUM OF CONNECTER, etc.

ORGANIZATION	DEPARTMENT	TOLERANCES
Smart Power Business Line	RD Center CN	

TITLE (ZH)	TYPE	SCALE	FORMAT	LANGUAGE	SHEET
		NA	A3	EN/ZH	13/16

TITLE (EN)	DOC. NO.	REV.
ZBTS 1600-3000A	2TFM360001A1001	A

Proprietary and Secret Information

We reserve all rights in this document and in the information contained therein. Reproduction,use or disclosure to third parties without express authority is strictly forbidden.Copyright ©2019 ABB.

保密文件经手人赋有保密义务;未经授权而披露,权利人享有追偿权利!

Rev	Description
A	First Release

LOAD SHED OPTION

AVALABLE FOR OPEN TRANSITION:

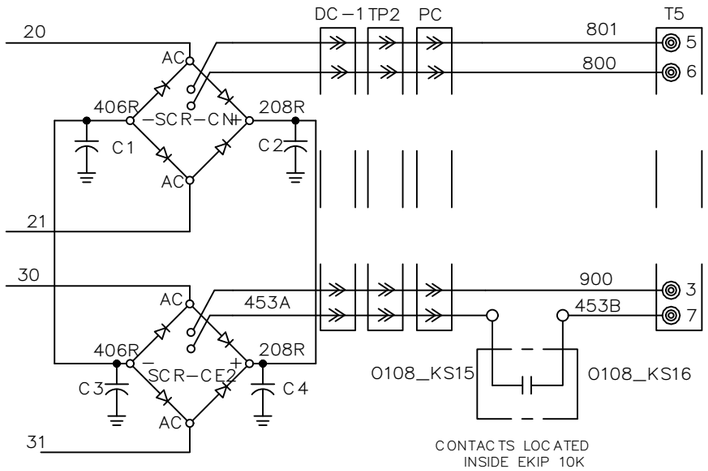

AVAILBLE FOR DELAYED AND CLOSED TRANSITION:

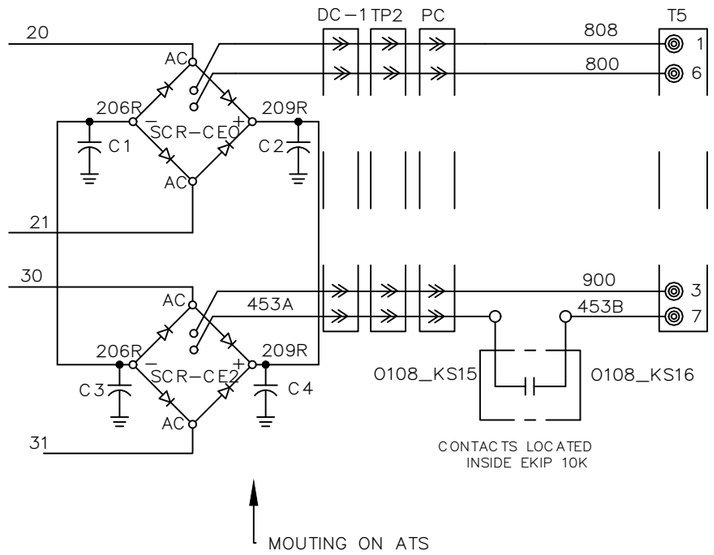

TruCONTROLL T5: ATS command out

1								8
CEO	CE	24V	CNO	CN	24V	GND	GND	
808	901	900	908	801	800	453B		

EKIP 10K Output

O108_KS15	O108_KS16

OPEN CN/CEO COIL

EKIP 10K Input

I105_HS09	I105_HS10

From Customer load shed input

NOTE:
1. PROGRAM THE EKIP 10K INPUTS AND OUTPUT FEATURES AS BELOW FUCNTIONS.
   O108 = "SCR SIGNAL LOAD SHED" ,"N.O." CONTACT.
   I105 = "LOAD SHED INPUT SIGNAL" , "N.O." CONTACT.
2.

PARALLEL TRIP OUTPUT AND ALARM OPTION

RECOMMENDED CONNECTION
FOR EXTERNAL SHUNT TRIP

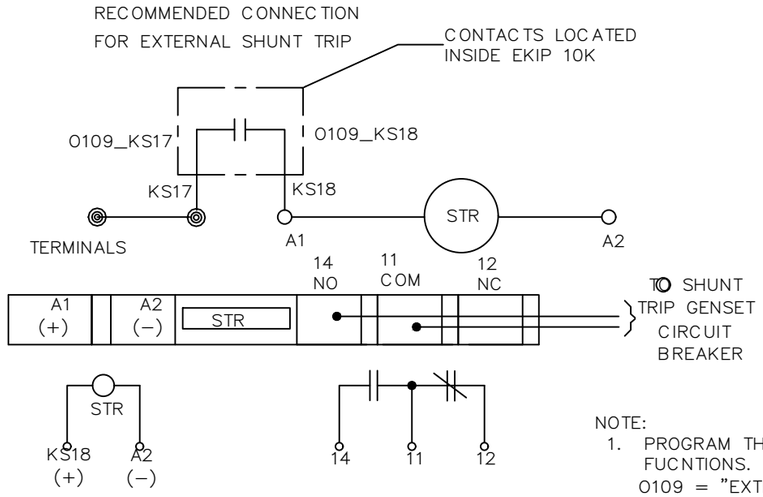

RECOMMENDED CONNECTION
FOR ALARM

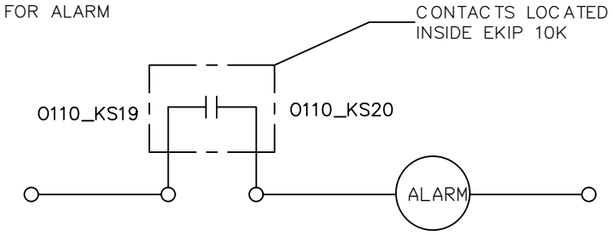

EKIP 10K output

O109_KS17	O109_KS18	O110_KS19	O110_KS20

TO SHUNT RELAY
TO EXTERNAL ALARM ANNUNCIATION CIRUIT

EKIP Digital Output Contact ratings:
4 amp @ 250 Vac, 2 amlp @ 30 Vdc

STR Relay Coil Selection:
K-1306: 24 volt AC
K-1307: 24 volt DC(default wring on factory)
K-1308: 120 volt AC/DC
Contact rating: 6Amp @250Vac / 30Vdc.

NOTE:
1. PROGRAM THE EKIP 10K OUTPUT FEATURES AS BELOW FUCNTIONS.
   O109 = "EXTENDED PARALLEL TRIP OUTPUT" ,"N.O." CONTACT.
   O110 = "EXTENDED PARALLEL ALARM" , "N.O." CONTACT.
2. ONLY AVAILABLE FOR CLOSE TRANSITION.

*FUNCTIONAL DIMENSIONS

COLOR	SURFACE	TOOL	QPS	FTS	VTP	UNMARKED ROUNDINGS	UNMARKED DRAFTS
			N	N	N		

RAW MATERIAL	MATERIAL NORM	NET WEIGHT	VOLUME	AREA

CREATED	MODIFIED	APPROVED
DEREK	DEREK	Hanks

ECN NUMBER	ECN DATE	PRODUCT	DRAWING FILE
	2021-9-07	ZENITH ZBTS T-SERIES	LOAD SHED/PARALLEL TRIP

ORGANIZATION	DEPARTMENT	TOLERANCES
Smart Power Business Line	RD Center CN	

TITLE (ZH)	TYPE	SCALE	FORMAT	LANGUAGE	SHEET
		NA	A3	EN/ZH	14/16

TITLE (EN)	DOC. NO.	REV.
ZBTS 1600-3000A	2TFM360001A1001	A

We reserve all rights in this document and in the information contained therein. Reproduction,use or disclosure to third parties without express authority is strictly forbidden.Copyright ©2019 ABB.
保密文件经手人赋有保密义务;未经授权而披露,权利人享有追偿权利!

Rev	Description
A	First release

AUDIBLE TRANSITION ALARM OPTION

AVAILABLE FOR PACKAGE PLUS(P) OF OPEN TRANSITION :

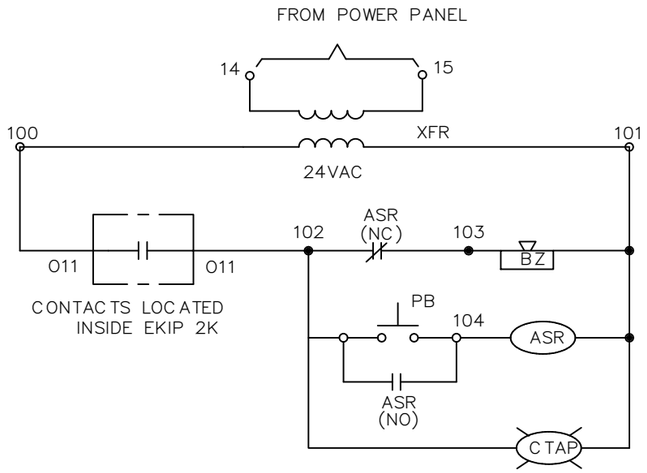

AVAILABLE FOR PACKAGE CONTROL(C), FLEX(F) AND MOTOR OF ALL TRANSITION:
AND PACKAGE PLUS(P) OF DELAYED AND CLOSED TRANSITION

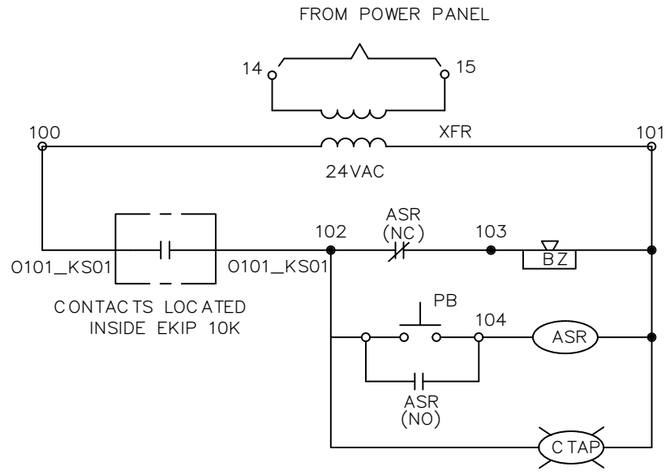

NOTE :

1. THE CTAP ALARM WILL SOUND AND ILLUMINATE WHEN THE ATS TRANSFER TO SOURCE 2.
2. ALARM CAN BE SILENCED VIA PUSHBUTTON FROM THE PUSHBUTTON ON THE DOOR.
3. PROGRAM EKIP 10K O101 OR EKIP 2K O11 FOR "ATS IN POSITION II", "NO" CONTACT TYPE

BYPASS AUXILIARY CONTACT OPTION

CUSTOMER BYPASS AUXILIARY CONTACT CONNECTION SOURCE 1

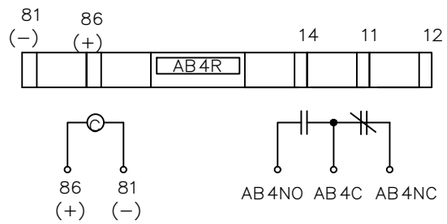

CUSTOMER BYPASS AUXILIARY CONTACT CONNECTION SOURCE 2

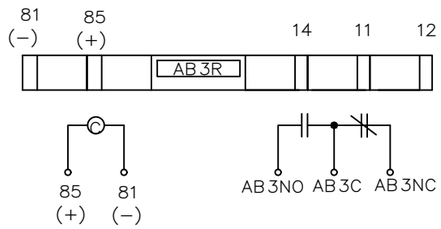

NOTES:
1. COMPLETE ASSEMBLY: FINDER PART #38.51.7.024.0050
   COIL: 24 VDC
   CONTACTS: SPDT, 6A, 250 VAC.
2. ONLY AVAILABLE FOR PACKAGE CONTROL(C), FLEX(F) AND MOTOR

*FUNCTIONAL DIMENSIONS

COLOR	SURFACE	TOOL	QPS	FTS	VTP	UNMARKED ROUNDINGS	UNMARKED DRAFTS
			N	N	N		

RAW MATERIAL	MATERIAL NORM	NET WEIGHT	VOLUME	AREA

CREATED	MODIFIED	APPROVED
DEREK	DEREK	Hanks

ECN NUMBER	ECN DATE	PRODUCT	DRAWING FILE
	2021-9-07	ZENITH ZBTS T-SERIES	AUX CONTACT AND TRANS ALARM

ORGANIZATION	DEPARTMENT	TOLERANCES
Smart Power Business Line	RD Center CN	

TITLE (ZH)	TYPE	SCALE	FORMAT	LANGUAGE	SHEET
		NA	A3	EN/ZH	15/16

TITLE (EN)	DOC. NO.	REV.
ZBTS 1600-3000A	2TFM360001A1001	A

We reserve all rights in this document and in the information contained therein. Reproduction,use or disclosure to third parties without express authority is strictly forbidden.Copyright ©2019 ABB.
保密文件经手人赋有保密义务;未经授权而披露,权利人享有追偿权利!

Rev	Description
A	First release

SWITCH—Test/Auto/Inhibit/Start OPTION

AVAILABLE FOR PACKAGE PLUS(P) OF OPEN TRANSITION :

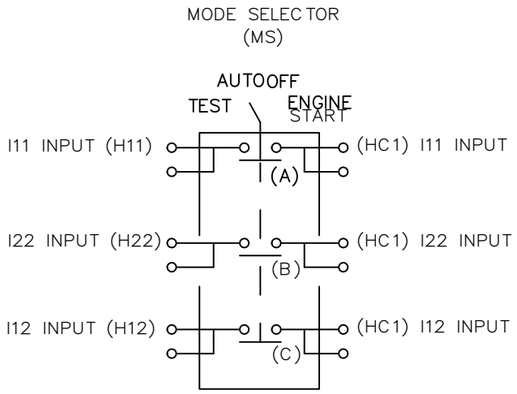

AVAILABLE FOR PACKAGE PLUS(P) OF DELAYED/CLOSED TRANSITION :

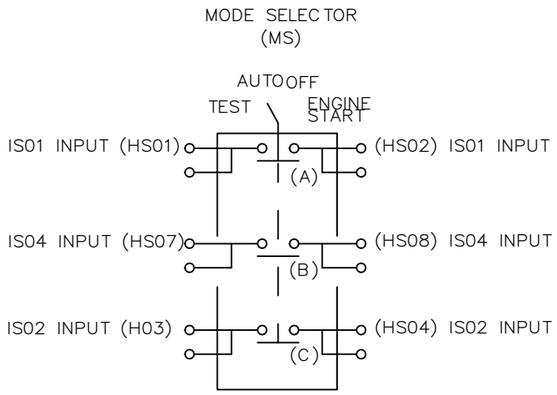

AVAILABLE FOR PACKAGE FLEX(F) OF ALL TRANSITION :

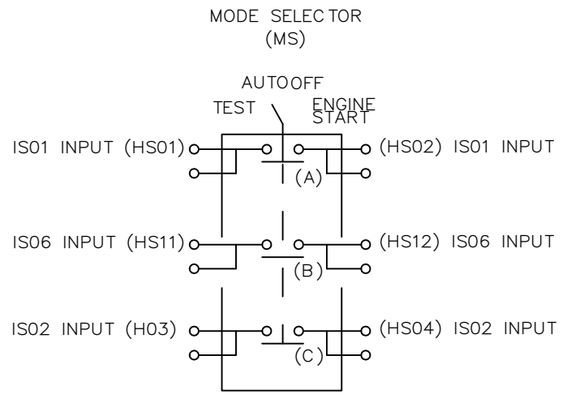

AVAILABLE FOR PACKAGE MOTOR(M) OF ALL TRANSITION :

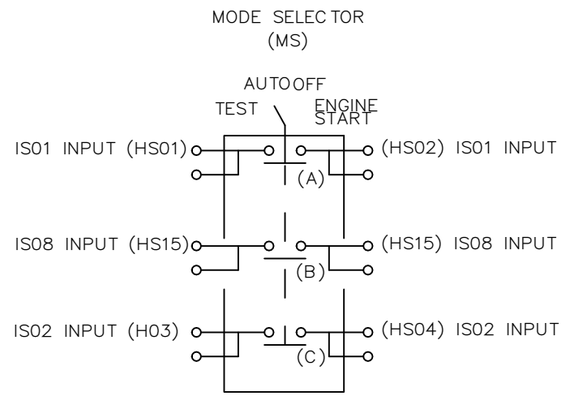

INSTALLATION INSTRUCTION:

MODE SELECTOR (MS) SWITCH CHART

	SWITCH POSITION				OPERATOR : P9M-SCX0Z95	NOTE: PROGRAM THE ATS INPUT TO:
	1 TEST	2 AUTO	3 OFF	4 ENG. START	CONTACT BLOCK P/N & MOUNTING LOCATION (ON P9A-CFS5)	
CONTACT BLOCK 1 (A) (LOAD TEST)	X	O	O	O	P9B-02VN MOUNTED ON POSITION 4	N.O.
CONTACT BLOCK 2 (B) (OFF)	O	O	X	O	P9B-20VN MOUNTED ON POSITION 2	N.O.
CONTACT BLOCK 3 (C) (NO LOAD TEST)	O	O	O	X	P9B-02VN MOUNTED ON POSITION 3	N.O.

X — CLOSED CONTACT O — OPEN CONTACT

1. MOUNT EACH CONTACT BLOCKS ON DEFINED POSITION AS MENTIONED IN ABOVE TABLE ON 5-POSITION CONTACT BLOCK HOLER (ITEM #2)
2. UTILIZE ITEM #6 TO COMPLETE THE WIRING CONNECTION BETWEEN THE CONTACT BLOCKS AND INPUTS ON THE ELEC PANEL.
3. PROGRAM THE INPUTS IN ELEC PANEL FOR ASSOCIATED FEATURES AS "N.O." CONTACT.
   A. CONTACT BLOCK 1 (A) : POSITION 4 = CONFIGURE THE INPUT FOR "REMOTE TEST ON LOAD"
   B. CONTACT BLOCK 2 (B) : POSITION 2 = CONFIGURE THE INPUT FOR "INHIBIT AUTO MODE"
   C. CONTACT BLOCK 3 (C) : POSITION 3 = CONFIGURE THE INPUT FOR "REMOTE TEST OFF LOAD"
4. VERIFY THAT SELECTOR SWITCH (MS) OPERATES PER THE ABOVE TABLE AFTER THE ASSEMBLY.
5. WINDOW COVER MUST USE FOR NEMA 3R, 4, 12 & 4X TYPE CABINET TO COVER THIS SELECTOR SWITCH
6. FOUR POSITION SELECTOR SWITCH (MS) IS SHOWN IN "AUTO" POSITION.

OPERATION:

1. "MAINTAINED POSITION" KEY OPERATED SELECTOR SWITCH. KEY CAN BE REMOVED FROM ANY POSITION.
2. SWITCH POSITION WILL ACTIVATE THE INPUT IN ATS FOR RESPECTED FUNCTION.
3. "AUTO" POSITION : ATS WILL FUNCTION AS NORMAL ATS
4. "TEST" POSITION : "REMOTE TEST ON LOAD" INPUT ACTIVE. ATS WILL SEND SIGNAL TO START THE ALTERNATE SOURCE AND TRANSFER TO ALTERNATE SOURCE.
5. "OFF" POSITION : "INHIBIT AUTO MODE" INPUT ACTIVE. ATS WILL BE IN INHIBIT MODE. IT WILL NOT TAKE ANY ACTION NO MATTER THE CONDITION OF SOURCES. ATS WILL ALSO NOT START THE ALTERNATE SOURCE IF THE MAIN SOURCE FAIL.
6. "ENGINE START" POSITION : "REMOTE TEST OFF LOAD" INPUT ACTIVE. ATS WILL SEND SIGNAL TO START THE ALTERNATE SOURCE ONLY. IT WILL NOT TRANSFER TO ALTERNATE SOURCE.

*FUNCTIONAL DIMENSIONS Fo Fi Fc

COLOR	SURFACE	TOOL	QPS N	FTS N	VTP N	UNMARKED ROUNDINGS	UNMARKED DRAFTS
RAW MATERIAL		MATERIAL NORM	NET WEIGHT			VOLUME	AREA
CREATED DEREK		MODIFIED DEREK				APPROVED Hanks	
ECN NUMBER	ECN DATE 2021-9-07	PRODUCT ZENITH ZBTS T-SERIES				DRAWING FILE 4 Positoin switch option	
ORGANIZATION Smart Power Business Line		DEPARTMENT RD Center CN				TOLERANCES	
ABB	TITLE (ZH)			TYPE	SCALE NA	FORMAT A3	LANGUAGE EN/ZH	SHEET 16/16
	TITLE (EN) ZBTS 1600-3000A			DOC. NO. 2TFM360001A1001			REV. A

We reserve all rights in this document and in the information contained therein. Reproduction,use or disclosure to third parties without express authority is strictly forbidden.Copyright ©2019 ABB.
保密文件经手人赋有保密义务;未经授权而披露,权利人享有追偿权利!

Rev	Description
A	First Release