Site Planning tool

Find your way around different types of Selectivity

—

Find your way around different types of selectivity when adopting UPSs and circuit breakers with our new Site Planning Tool: a new datasheet where to find much useful information about selectivity, based on different types of UPSs and their working principles.

Site Planning Tool overview

Click the UPS that best reflects your needs from the list below to jump to the related page and achieve Selectivity.

STANDALONE UPSs

PowerWave 33 S2

PowerWave 33 S3

SG Series

TLE Series

PowerScale

MODULAR UPSs

DPA 250 S4

DPA 500

DPA UPScale ST/RI

MegaFlex DPA

DC PROTECTION

14–20 DC Protection selection

Click here to download the Technical Guide to easily navigate inside the Site Planning Tool and find your way around Selectivity.

Notes:

- Tables in this document contain parameters of the UPS that may be useful for planning the installation and sizing of cables and elecrical protections
- Values of the fuses (bypass and battery) correspond to the nominal current of the components

PowerWave 33 S2
Coordination tables for UPS

UPS rated power [kW]	Bypass CB Type QA2 (1)	Selectivity (2)	Rectifier CB Type QA1 (1)	Selectivity	Downstream CB Type QA3 (3)	Selectivity with upstream bypass
160	XT6 630 Ekip 630	Total	XT5 400 Ekip 400	Total	S800 B80	Total
200	XT6 800 TMA	Total	XT5 630 Ekip 630	Total	S800 B100	Total
250	XT7 1000 Ekip 1000	Total	XT5 630 Ekip 630	Total	S800 B125	Total
300	XT7 1250 Ekip 1250	Total	XT5 630 Ekip 630	Up to 150kA	XT2 160 Ekip 160	Total
400	XT7 800 Ekip 800	Total	XT6 800 TMA / XT7 800 Ekip 800	Total	XT4 250 Ekip 250	Total
500	XT7 1000 Ekip 1000	Total	XT6 1000 / XT7 1000 Ekip 1000	Total	XT4 250 Ekip 250	Total

Note:

1. Breaking capacity shall be selected according to prospective short circuit current in the point of installation.
2. Selectivity is intended between upstream breaker and downstream UPS, considering protections embedded in UPS
3. Maximum size of downstream breaker to achieve selectivity level indicated in table. Breaking capacity shall be se- lected according to prospective short circuit current in the point of installation.

ABB reserves the right to modify the content of this document on the basis of technical development of the products, without prior notice. Copyright 2021 ABB. All rights reserved.

PowerWave 33 S3
Coordination tables for UPS

UPS rated power [kW]	Upstream CB Type QA1 (1)	Selectivity (2)	Downstream CB Type QA3 (3)	Selectivity with upstream bypass	Alternative downstream breaker
60	XT1 TMD 160 / XT2 160 Ekip 100	Total	S203M B40	Up to 8.5kA	Total selectivity with S803 B16 / S203 B16
80	XT2 160 Ekip 160	Total	S803 B63	Up to 28.5kA	Total selectivity with S803 B32 / S203 B40
100	XT3 TMD 200 / XT4 250 Ekip 250	Total	S803 B50 / S203 M B 50	Total	
120	XT5 400 TMA / Ekip 400	Total	S803 B63 / S203 M B 63	Total	

Note:
1. Breaking capacity shall be selected according to prospective short circuit current in the point of installation.
2. Selectivity is intended between upstream breaker and downstream UPS, considering protections embedded in UPS
3. Maximum size of downstream breaker to achieve selectivity level indicated in table. Breaking capacity shall be se- lected according to prospective short circuit current in the point of installation.

ABB reserves the right to modify the content of this document on the basis of technical development of the products, without prior notice. Copyright 2021 ABB. All rights reserved.

SG Series
Coordination tables for UPS

UPS rated power [kW]	Upstream CB Type QA1 (1)	Selectivity (2)	Downstream CB Type QA3 (3)	Selectivity with upstream bypass	Alternative downstream breaker QA3
10	XT1B 160 TMD 63	Total	S203 - B6	Total	
15	XT1B 160 TMD 63	Total	S203 - B6	Total	
20	XT1B 160 TMD 63	Total	S203 - B6	Total	
30	XT1B 160 TMD 63	Total	S203 - B6	Total	
40	XT1B 160 TMD 63	Total	S203 - B6	Total	
60	XT2N 160 TMA 125	Total	S203 - B40	Total	
80	XT2N 160 TMA 160	Total	S203 - B50	Total	
100	XT5N 400 Ekip 250	up to 50	XT2N 160 Ekip 100	up to 5kA	S203 - B63 total selectivity
120	XT5N 400 Ekip 250	up to 50	XT2N 160 Ekip 100	up to 5kA	S203 - B63 total selectivity
160	XT7 1250 Ekip 1250	Total	S203 M - B63	Up to 3.8kA	
200	XT7 1250	Total	S203 M - B63	Up to 3.8kA	
250	XT7 1250	Total	S203 M - B63	Up to 5.8kA	
300	XT7 1250	Total	S203 M - B63	Up to 5.8kA	

Note:
1. Breaking capacity shall be selected according to prospective short circuit current in the point of installation.
2. Selectivity is intended between upstream breaker and downstream UPS, considering protections embedded in UPS.

ABB reserves the right to modify the content of this document on the basis of technical development of the products, without prior notice. Copyright 2021 ABB. All rights reserved.

TLE Series
Coordination tables for UPS

UPS rated power [kW]	Upstream CB Type QA1 (1)	Selectivity (2)	Downstream CB Type QA3 (3)	Selectivity with upstream bypass	Alternative downstream breaker
160	XT5 H 400 Ekip 400	Total	S203 M - B40	Total	
200	XT5 H 630 Ekip 630	Total	S203 M - B40	Total	
320	XT7 L 800 Ekip 630	Total	S203 M - B63	Up to14,5kA	S203 M - B40 total selectivity
400	XT7 L 800 Ekip 800	Total	S203 M - B63	Up to14,5kA	S203 M - B40 total selectivity
600	XT7 L 1250 Ekip 1250	Total	XT4 250 Ekip 250	Total	XT5 630 ELT up to 9kA
800	XT7 L 1600 Ekip 1600	Total	XT4 250 Ekip 250	Total	XT5 630 ELT up to 9kA

Note:
1. Breaking capacity shall be selected according to prospective short circuit current in the point of installation.
2. Selectivity is intended between upstream breaker and downstream UPS, considering protections embedded in UPS
3. Maximum size of downstream breaker to achieve selectivity level indicated in table. Breaking capacity shall be se- lected according to prospective short circuit current in the point of installation.

ABB reserves the right to modify the content of this document on the basis of technical development of the products, without prior notice. Copyright 2021 ABB. All rights reserved.

PowerScale
Coordination tables for UPS

UPS rated power [kVA]	By-pass CB Type QA2 (1)	Selectivity (2)	Rectifier CB Type QA1 (1)	Selectivity	Downstream CB Type QA3 (3)	Selectivity with upstream bypass
10	XT2 TMD 32 / XT2 160 Ekip 63	Total	S203 C32		-	
10	XT2 TMD 32 / XT2160 Ekip 63	Total	S203 C32		-	
15	XT2 160 TMD / Ekip 63	Total	XT2 160 Ekip 25 / XT1 TMD 25		-	
15	XT2 160 TMD / Ekip 63	Total	XT2 160 Ekip 25 / XT1 TMD 25		-	
20	XT2 160 TMD / Ekip 63	Total	XT2 160 Ekip 25 / XT1 TMD 25		-	
20	XT2 160 TMD / Ekip 63	Total	XT2 160 Ekip 25A / XT1 TMD 25		-	
25	XT2 TMD 80 / XT2 160 Ekip 100	Total	XT2 160 Ekip 63 / XT1 TMD 100	Total	S203 B16	Up to 0,7kA
25	XT2 TMD 80A / XT2 160 Ekip 100A	Total	XT2 160 Ekip 63 / XT1 TMD 100	Total	S203 B16	Up to 0,7kA
30	XT2 160 TMD / Ekip 100A	Total	XT2 160 Ekip 63 / XT1 TMD 100	Total	S203 B16	Up to 0,9kA
40	XT2 TMD 125A / XT4 250 Ekip 250A	Total	XT2 160 Ekip 63 / XT1 TMD 100	Total	S203 B25	Up to 1,3kA
50	XT2 TMD 160 / XT4 250 Ekip 250A	Total	XT2 160 Ekip 100 / XT1 TMD 125	Total	S203 B32	Up to 1,5kA

Note:

1. Breaking capacity shall be selected according to prospective short circuit current in the point of installation.
2. Selectivity is intended between upstream breaker and downstream UPS, considering protections embedded in UPS
3. Maximum size of downstream breaker to achieve selectivity level indicated in table. Breaking capacity shall be se- lected according to prospective short circuit current in the point of installation.

ABB reserves the right to modify the content of this document on the basis of technical development of the products, without prior notice. Copyright 2021 ABB. All rights reserved.

DPA 250 S4
Coordination tables for UPS

UPS rated power [kW]	By-pass CB Type QA2 (1)	Selectivity (2)	Rectifier CB Type QA1 (1)	Selectivity	Downstream CB Type QA3 (3)	Selectivity with upstream bypass
50	XT3 TMD 200 / XT4 250 Ekip 250	Total	XT1 TMD 160 / XT2 160 Ekip 100	Total	S203 B25	Up to 0,6kA
100	XT3 TMA 200 / XT4 250 Ekip 250	Total	XT3 TMA 200 / XT4 250 Ekip 250	Total	S203 B25	Up to 1,75kA
150	XT5 400 Ekip 320	Total	XT5 400 Ekip 320	Total	S203 B63	Up to 2,5kA
200	XT5 400 Ekip 400	Total	XT5 400 Ekip 400	Total	S203 B63	Up to 4,2kA
250	XT5 630 Ekip 630	Total	XT5 630 Ekip 630	Total	S203 B63	Up to 6,8kA
300	XT5 630 Ekip 630	Total	XT5 630 Ekip 630	Total	S203 B63	Total

Note:

1. Breaking capacity shall be selected according to prospective short circuit current in the point of installation.
2. Selectivity is intended between upstream breaker and downstream UPS, considering protections embedded in UPS
3. Maximum size of downstream breaker to achieve selectivity level indicated in table. Breaking capacity shall be se- lected according to prospective short circuit current in the point of installation.

ABB reserves the right to modify the content of this document on the basis of technical development of the products, without prior notice. Copyright 2021 ABB. All rights reserved.

DPA 500
Coordination tables for UPS

UPS rated power [kVA]	Bypass CB Type QA2 (1)	Selectivity (2)	Rectifier CB Type QA1 (1)	Selectivity	Downstream CB Type QA3 (3)	Selectivity with upstream bypass
100	XT5 400 TMA / Ekip 400	Total	XT3 TMA 200 / XT4 250 Ekip 250	Total	S203 63A	Up to 8,4kA
200	XT5 630 Ekip 630	Total	XT5 400 Ekip 400 / XT5 630 Ekip 630	Total	S800 125	Total
300	XT6 TMA 630 / XT7 800 Ekip 800	Up to 70 kA	XT5 630 Ekip 630 / XT7 800 Ekip 800	Up to 150 kA / Total	XT2 160 Ekip 160	Total
400	XT6 TMA 630 / XT7 800 Ekip 800	Up to 70kA / Total	XT6 TMA 630 / XT7 800 Ekip 800	Up to 70KA / Total	XT4 250 Ekip 250	Total
500	XT6 1000 Ekip 1000 / XT7 1000 Ekip 1000	Up to 70KA/ Total	XT6 1000 Ekip 1000 / XT7 1000 Ekip 1000	Up to 70KA / Total	XT4 250 Ekip 250	Total

Note:

1. Breaking capacity shall be selected according to prospective short circuit current in the point of installation.
2. Selectivity is intended between upstream breaker and downstream UPS, considering protections embedded in UPS
3. Maximum size of downstream breaker to achieve selectivity level indicated in table. Breaking capacity shall be se- lected according to prospective short circuit current in the point of installation.

ABB reserves the right to modify the content of this document on the basis of technical development of the products, without prior notice. Copyright 2021 ABB. All rights reserved.

DPA UPScale ST/RI
Coordination tables for UPS

UPS Series	Module rated power [kW]	UPS rated power [kW]	By-pass CB Type QA2 (1)	Selectivity (2)	Rectifier CB Type QA1 (1)	Selectivity	Downstream CB Type QA3 (3)	Selectivity with upstream bypass
UPScale ST 40	10	20	XT2 TMA 32 / XT2 160 Ekip 63A	Total	XT1 TMD 32 / XT2 160 Ekip 63		-	-
UPScale ST 40	20	40	XT2 TMA 100 / XT2 160 Ekip 100	Total	XT1 TMD 100 / XT2 160 Ekip 100	Total	S200 B 16A	Up to 0.8kA
UPScale ST 60	10	30	XT1 TMD 100 / XT2 160 Ekip 63	Total	XT1 TMD 100 / XT2 160 Ekip 63	Total	S200 B 25A	Up to 0,4kA
UPScale ST 60	20	60	XT1 TMD 125A / XT2 160 Ekip 63	Total	XT1 TMD 125 / XT2 160 Ekip 160	Total	S200 B 32A	Up to 1,3kA
UPScale ST 80	10	40	XT1 TMD 125 / XT2 160 Ekip 100	Total	XT1 TMD 125 / XT2 160 Ekip 100	Total	S200 B 32A	Up to 0,5kA
UPScale ST 80	20	80	XT1 TMD 160 / XT2 160 Ekip 160	Total	XT1 TMD 160 / XT2 160 Ekip 160	Total	S200 B 50A	Up to 1,8KA
UPScale ST 120	10	60	XT1 TMD 125A / XT2 ELT 160	Total	XT1 TMD 125A / XT2 ELT 160	Total	S200 B 50A	Up to 0,9kA
UPScale ST 120	20	120	XT3 TMD 250A / XT4 ELT 250	Total	XT3 TMD 250A / XT4 ELT 250	Total	S200 B 63A	Up to 3,5kA
UPScale ST 200	10	100	XT3 TMD 200A / XT4 ELT 250	Total	XT3 TMD 200A / XT4 ELT 250	Total	S800 B 80A	Total
UPScale ST 200	20	200	XT5 400 Ekip 400	Up to 70kA/100kA	XT5 400 Ekip 400	Up to 70kA/100kA	XT1 TM 160 / XT2 160 Ekip 160	Up to 7kA
UPScale RI 10	10	10	S200 C40		S200 C20		-	-
UPScale RI 10	20	20	XT1 TMD 100 / XT2 160 Ekip 63	Total	XT1 TMD 100 / XT2 160 Ekip 63	Total	S200 B10	Up to 0,4kA
UPScale RI 11	10	10	S200 C40		S200 C20		-	-
UPScale RI 11	20	20	XT1 TMD 100 / XT2 160 Ekip 63	Total	XT1 TMD 100 / XT2 160 Ekip 63	Total	S200 B10	Up to 0,4kA
UPScale RI 12	10	10	S200 C40		S200 C 20		-	-
UPScale RI 12	20	20	XT1 TMD 100 / XT2 160 Ekip 63	Total	XT1 TMD 100 / XT2 160 Ekip 63	Total	S200 B 10	Up to 0,4kA
UPScale RI 20	10	20	S200 C63		S200 C63		-	-
UPScale RI 20	20	40	XT1 TMD 100 / XT2 160 Ekip 100	Total	XT1 TMD 100 / XT2 160 Ekip 100	Total	S200 B25	Up to 0,8kA
UPScale RI 22	10	20	S200 C63		S200 C63		-	-
UPScale RI 22	20	40	XT1 TMD 100 / XT2 160 Ekip 100	Total	XT1 TMD 100 / XT2 160 Ekip 100	Total	S200 B25	Up to 0,8kA
UPScale RI 24	10	20	S200 C63		S200 C63		-	-
UPScale RI 24	20	40	XT1 TMD 100 / XT2 160 Ekip 100	Total	XT1 TMD 100 / XT2 160 Ekip 100	Total	S200 B25	Up to 0,8kA
UPScale RI 40	10	40	XT1 TMD 125 / XT2 160 Ekip 100	Total	XT1 TMD 125A / XT2 160 Ekip 100	Total	S200 B32	Up to 0,6kA

Note:

1. Breaking capacity shall be selected according to prospective short circuit current in the point of installation.
2. Selectivity is intended between upstream breaker and downstream UPS, considering protections embedded in UPS
3. Maximum size of downstream breaker to achieve selectivity level indicated in table. Breaking capacity shall be se- lected according to prospective short circuit current in the point of installation.

ABB reserves the right to modify the content of this document on the basis of technical development of the products, without prior notice. Copyright 2021 ABB. All rights reserved.

MegaFlex DPA
Coordination tables for UPS

UPS rated power [kVA]	Upstream CB Type QA1 (1)	Selectivity (2)	Downstream CB Type QA3 (3)	Selectivity with upstream bypass	Alternative downstream breaker QA3
1000	XT7 1600 Ekip 1600	Up to 120kA	XT5 630 Ekip 630	Total	
1250	E2.2 2500 Ekip 2500	Total	XT5 630 Ekip 630	Total	
1500	E4.2 3200 Ekip 3200	Total	XT7 1600 Ekip 1600	up to 29kA	XT5 630 Ekip 630 total selectivity

Note:
1. Breaking capacity shall be selected according to prospective short circuit current in the point of installation.
2. Selectivity is intended between upstream breaker and downstream UPS, considering protections embedded in UPS
3. Maximum size of downstream breaker to achieve selectivity level indicated in table. Breaking capacity shall be se- lected according to prospective short circuit current in the point of installation.

ABB reserves the right to modify the content of this document on the basis of technical development of the products, without prior notice. Copyright 2021 ABB. All rights reserved.

DC Protection selection

Protect your UPS's battery cabinet

DC Protection selection
Standalone UPSs

PowerWave 33 S2

UPS Series	UPS rated power [kW]	UPS number of poles	Circuit Breaker - 4P
PowerWave 33 S2	160	3	T5 630 TMA 500
PowerWave 33 S2	200	3	T5 630 TMA 500
PowerWave 33 S2	250	3	T6 630 TMA 630
PowerWave 33 S2	300	3	T6 800 TMA 800
PowerWave 33 S1	400	3	E2 1000 PR123
PowerWave 33 S1	500	3	E2 1250 PR123

PowerWave 33 S3

UPS Series	UPS rated power [kW]	UPS number of poles	Circuit Breaker - 3P
PowerWave 33 S3	60	2	T4 250 TMA 160
PowerWave 33 S3	80	2	T4 250 TMA 200
PowerWave 33 S3	100	2	T4 250 TMA 250
PowerWave 33 S3	120	2	T5 400 TMA 320

ABB reserves the right to modify the content of this document on the basis of technical development of the products, without prior notice. Copyright 2021 ABB. All rights reserved.

PowerScale

UPS Series	UPS rated power [kW]	UPS number of poles	Circuit Breaker - 4P
Powerscale	9	3	T4 250 TMD 50
Powerscale	13,5	3	T4 250 TMD 50
Powerscale	18	3	T4 250 TMD 50
Powerscale	22,5	3	T4 250 TMD 50
Powerscale	22,5	3	T4 250 TMA 80
Powerscale	27	3	T4 250 TMA 125
Powerscale	36	3	T4 250 TMA 125
Powerscale	45	3	T4 250 TMA 125

TLE Series

UPS Series	UPS rated power [kW]	UPS number of poles	Circuit Breaker - 3P
TLE Series S2	160	2	XT5 630 TMA 500
TLE Series S2	200	2	XT5 630 TMA 630
TLE Series S2	320	2	E2 1000 PR123
TLE Series S2	400	2	E2 1250 PR123
TLE Series S2	600	2	E2 1600 PR123
TLE Series S2	800	2	E3 2500 PR123

ABB reserves the right to modify the content of this document on the basis of technical development of the products, without prior notice. Copyright 2021 ABB. All rights reserved.

SG Series

UPS Series	UPS rated power [kW]	UPS number of poles	Circuit Breaker - 3P
SG Series	10	2	XT1 160 TMD 40
SG Series	15	2	XT1 160 TMD 63
SG Series	20	2	XT1 160 TMD 80
SG Series	30	2	XT1 160 TMD 125
SG Series	40	2	XT3 160 TMD 160
SG Series	60	2	XT3 250 TMD 250
SG Series	80	2	XT5 400 TMA 320
SG Series	100	2	XT5 400 TMA 400
SG Series	120	2	XT5 630 TMA 500
SG Series	160	2	XT5 630 TMA 630
SG Series	200	2	XT6 800 TMA 800
SG Series	250	2	E2 1000 PR123
SG Series	300	2	E2 1250 PR123
SG Series	400	2	E2 1600 PR123
SG Series	500	2	E3 2000 PR123

ABB reserves the right to modify the content of this document on the basis of technical development of the products, without prior notice. Copyright 2021 ABB. All rights reserved.

DC Protection selection
Modular UPSs

DPA 500

UPS Series	Nr. Modules	Module rated power [kW]	UPS rated power [kW]	UPS number of poles	Circuit Breaker - 3P
CP DPA 500	1	100	100	2	T4 250 TMA 250
CP DPA 500	2	100	200	2	T5 630 TMA 500
CP DPA 500	3	100	300	2	T6 800 TMA 800
CP DPA 500	4	100	400	2	E2 1000 PR123
CP DPA 500	5	100	500	2	E2 1250 PR123

ABB reserves the right to modify the content of this document on the basis of technical development of the products, without prior notice. Copyright 2021 ABB. All rights reserved.

DPA UPScale ST/RI

UPS Series	Nr. Modules	Module rated power [kW]	UPS rated power [kW]	UPS number of poles	Circuit Breaker - 4P
Upscale ST 40	2	10	20	3	T4 250 TMA 80
Upscale ST 40	2	20	40	3	T4 250 TMA 100
Upscale ST 60	3	10	30	3	T4 250 TMA 100
Upscale ST 60	3	20	60	3	T4 250 TMA 160
Upscale ST 80	4	10	40	3	T4 250 TMA 160
Upscale ST 80	4	20	80	3	T4 250 TMA 200
Upscale ST 120	6	10	60	3	T4 250 TMA 200
Upscale ST 120	6	20	120	3	T5 400 TMA 320
Upscale ST 200	10	10	100	3	T5 400 TMA 320
Upscale ST 200	10	20	200	3	T5 630 TMA 500
Upscale RI 10	1	10	10	3	T4 250 TMD 32
Upscale RI 10	1	20	20	3	T4 250 TMD 50
Upscale RI 11	1	10	10	3	T4 250 TMD 32
Upscale RI 11	1	20	20	3	T4 250 TMD 50
Upscale RI 12	1	10	10	3	T4 250 TMD 32
Upscale RI 12	1	20	20	3	T4 250 TMD 50
Upscale RI 20	2	10	20	3	T4 250 TMA 80
Upscale RI 20	2	20	40	3	T4 250 TMA 100
Upscale RI 22	2	10	20	3	T4 250 TMA 80
Upscale RI 22	2	20	40	3	T4 250 TMA 100
Upscale RI 24	2	10	20	3	T4 250 TMA 80
Upscale RI 24	2	20	40	3	T4 250 TMA 100
Upscale RI 40	4	10	40	3	T4 250 TMA 160
Upscale RI 40	4	20	80	3	T4 250 TMA 200

ABB reserves the right to modify the content of this document on the basis of technical development of the products, without prior notice. Copyright 2021 ABB. All rights reserved.

DPA 250 S4

UPS Series	Nr. Modules	Module rated power [kW]	UPS rated power [kW]	UPS number of poles	Circuit Breaker - 3P and 4P
CP DPA 250 S4	1	50	50	2 or 3	T4 250 TMA 200
CP DPA 250 S4	2	50	100	2 or 3	T5 400 TMA 320
CP DPA 250 S4	3	50	150	2 or 3	T5 400 TMA 400
CP DPA 250 S4	4	50	200	2 or 3	T6 630 TMA 630
CP DPA 250 S4	5	50	250	2 or 3	T6 800 TMA 800
CP DPA 250 S4	6	50	300	2 or 3	T6 800 TMA 800

MegaFlex DPA

UPS Series	Nr. Modules	Module rated power [kW]	UPS rated power [kW]	UPS number of poles	Circuit Breaker - 3P
MegaFlex DPA 1000kW	4	250	1000	2	E4 3200 PR123
MegaFlex DPA 1250kW	5	250	1250	2	E6 4000 PR123
MegaFlex DPA 1500kW	6	250	1500	2	E6 4000 PR123

PowerLine DPA

UPS Series	Nr. Modules	Module rated power [kW]	UPS rated power [kW]	UPS number of poles	Circuit Breaker - 3P and 4P
PowerLine DPA	1	20	20	2	XT4X 160 TMA 63
PowerLine DPA	1	40	40	2	XT4X 160 TMA 125
PowerLine DPA	2	40	80	2	XT4X 250 TMA 225
PowerLine DPA	3	40	120	2	XT5 400 TMA 320

ABB reserves the right to modify the content of this document on the basis of technical development of the products, without prior notice. Copyright 2021 ABB. All rights reserved.

DC Protection selection

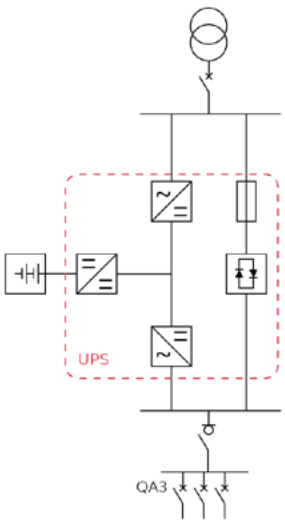

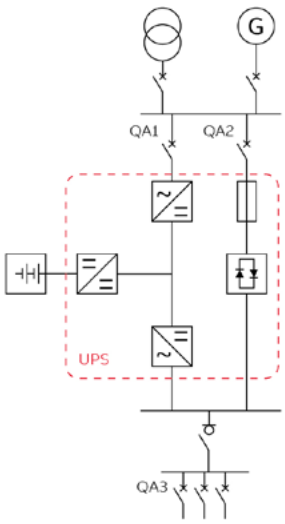

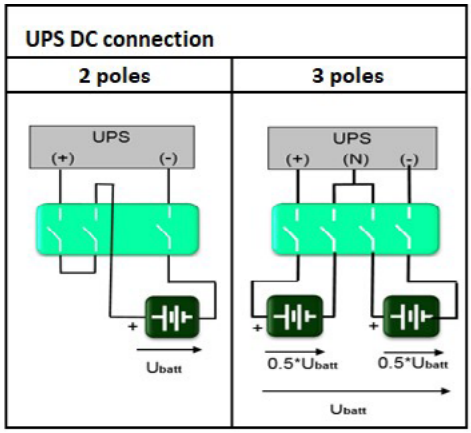

Guarantee
The information contained in coordination table document reflects the current state of our knowledge and aims to present our products for power continuity, their coordination, and possible applications. as defined with the applicable International standards.
All devices contained in coordination tables shall be installed and used as per product data and instruction contained in products' installation manuals and user manuals.
This coordination table is made available "as is" and with no express warranty. ABB further disclaims all other statutory and implied warranties, including, but not limited to, any warranty of fitness for particular purpose or merchantability.
The user and user's company agree that in no event will ABB be liable to the user or user's company for any claims, liabilities, or damages even if caused by the negligence of ABB, and under no circum- stances will ABB be liable for any indirect, special, incidental or consequential damages.

Liability
The devices in coordination tables do not endanger safety when they are selected, mounted, commissioned, used, maintained and disassembled with the applicable rules and standards and in accordance with the user manual. The devices shall be used by experts and well-trained people.
The selections contained in coordination table must be reviewed and approved by the user.

Additional information
We reserve the right to make technical changes or modify the contents of this document without prior notice. With regard to purchase orders, the agreed particulars will take precedence. ABB does not accept any responsibility whatsoever for potential errors or possible lack of information in this document.

ABB reserves the right to modify the content of this document on the basis of technical development of the products, without prior notice. Copyright 2021 ABB. All rights reserved.

—

ABB S.p.A.
Electrification Business Area
Smart Power Division
5, Via Pescaria
I-24123 Bergamo - Italy
Phone: +39 035 395.111
new.abb.com/low-voltage

We reserve all rights in this document and in the subject matter and illustrations contained therein. Any reproductionor utilization of its contents – in whole or in part – is forbidden without prior written consent of ABB. ©2021 ABB. All rights reserved

We reserve the right to make technical changes or modify the contents of this document without prior notice. With regard to purchase orders and/or contracts, the agreed particulars shall prevail. ABB does not accept any responsibility whatsoever for potential errors or possible lack of information in this document.

9AKK107992A9598 REV A 11.10.2021