First angle projection. Original drawing made with 3D CAD. Set the correct scale factor when adding dimensions after DWG/DXF conversion.

IP20

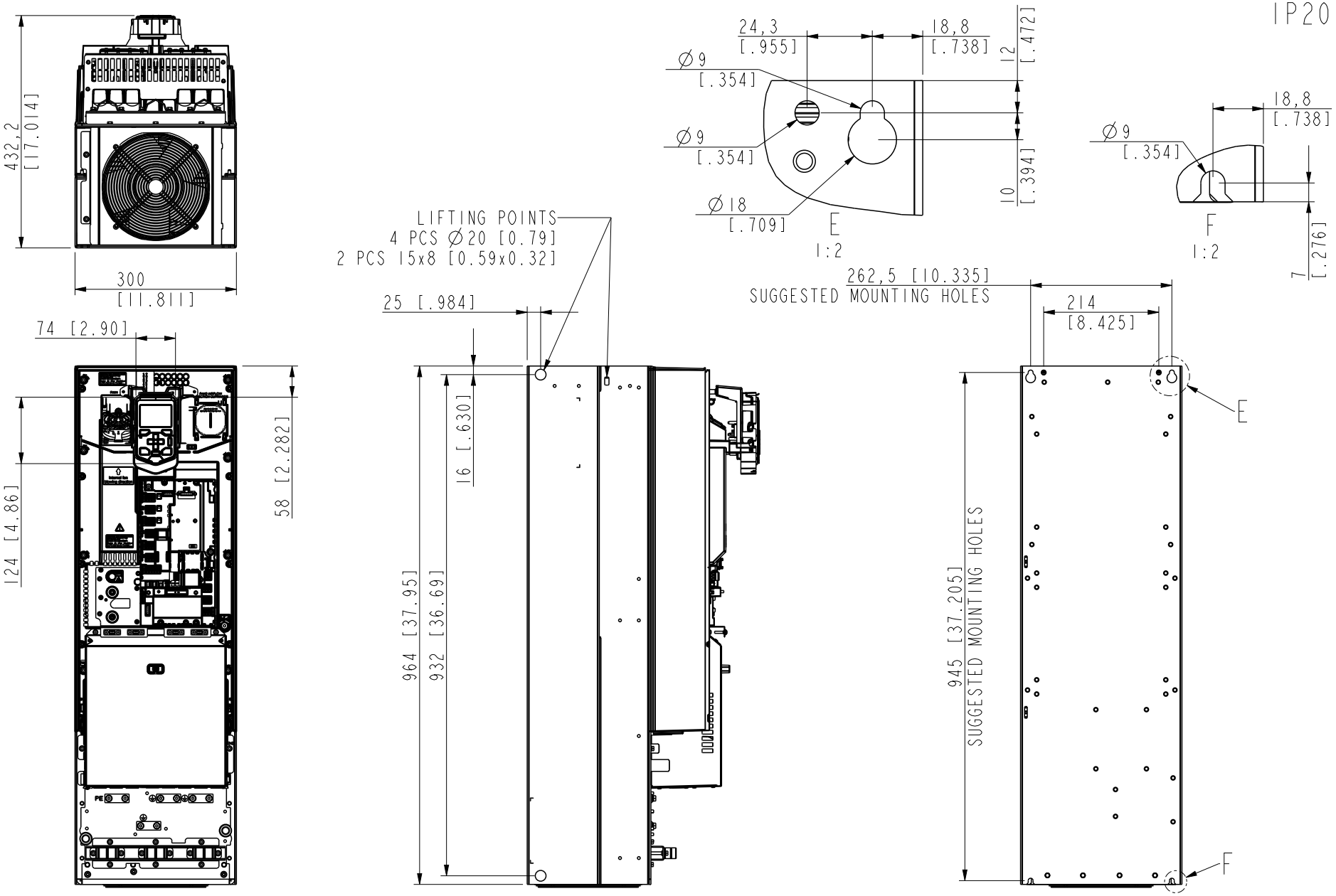

We reserve all rights in this document and in the information contained therein. Reproduction, use or disclosure to third parties without express authority is strictly forbidden. © ABB Oy. PROPRIETARY AND SECRET INFORMATION. CONFIDENTIAL

27-Jan-21	J.Savolainen	5000015631 20	
06-Aug-21	V.Rantanen	5000017067 13	

D	Added IP20 sheet, updated drawing titles	
E	Added IP55 height dimension	

3AXD50000147052 E.8+
ACXX80-XI_R8_MAIN_ASSEMBLY (ASSEM)35+

Based on	Prepared	J.Pekkarinen	02-Aug-17
Customer	Check.	J.Savolainen	25-Aug-21
	Appr.	H.Immonen	25-Aug-21
Cust. Doc. No.	Project name	Corinth	
DMS Number 3AXD10000629176	Weight kg		

Title DIMENSION DRAWING
ACH_ACQ580-31 R8 IP20/21/55
_

ABB

Doc. des. DIMENSION DRAWING	Scale 1:10	Form A4	
Resp.dept.	Rev.ind. E (AP)		Lang. EN
Doc. No. 3AXD50000147052			Sheet 1
			Total 3

First angle projection. Original drawing made with 3D CAD. Set the correct scale factor when adding dimensions after DWG/DXF conversion.

IP21

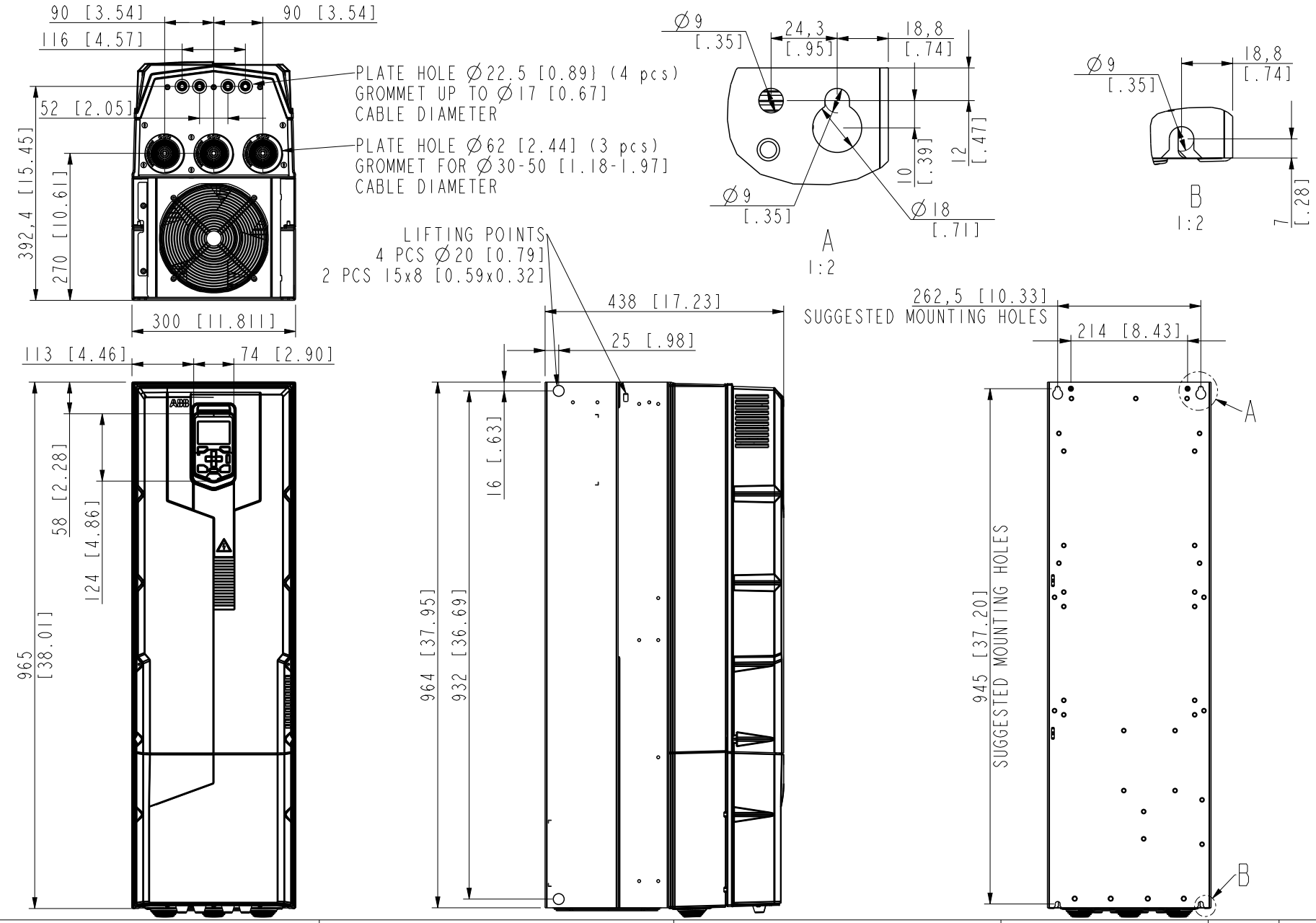

3AXD50000147052	E.8+	We reserve all rights in this document and in the information contained therein. Reproduction, use or disclosure to third parties without express authority is strictly forbidden. © ABB Oy. PROPRIETARY AND SECRET INFORMATION. CONFIDENTIAL	27-Jan-21	J.Savolainen	5000015631 20
ACXX80-XI_R8_MAIN_ASSEMBLY (ASSEM)35+			06-Aug-21	V.Rantanen	5000017067 13
D	Added IP20 sheet, updated drawing titles				
E	Added IP55 height dimension				

Based on	Prepared	J.Pekkarinen	02-Aug-17	Title DIMENSION DRAWING	Doc. des. DIMENSION DRAWING	Scale 1:10	Form A4
Customer	Check.	J.Savolainen	25-Aug-21	ACH_ACQ580-31 R8 IP20/21/55			
	Appr.	H.Immonen	25-Aug-21	_	Resp.dept.	Rev.ind. E (AP)	Lang. EN
Cust. Doc. No.	Project name	Corinth		ABB	Doc. No. 3AXD50000147052		Sheet 2
DMS Number 3AXD10000629176	Weight kg						Total 3

First angle projection. Original drawing made with 3D CAD. Set the correct scale factor when adding dimensions after DWG/DXF conversion.

IP55

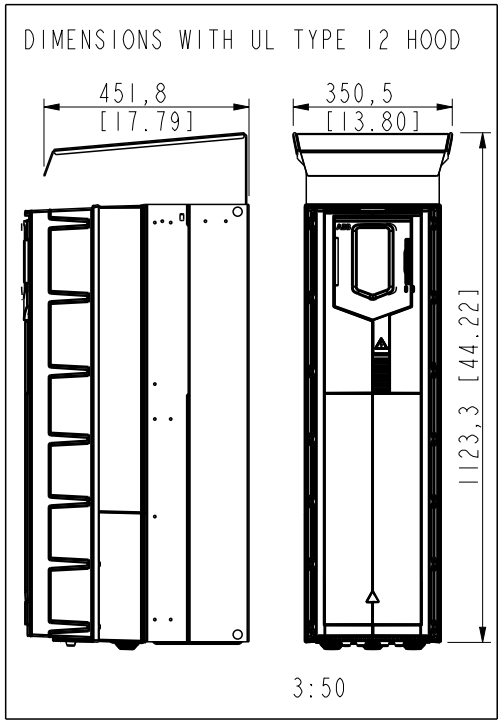

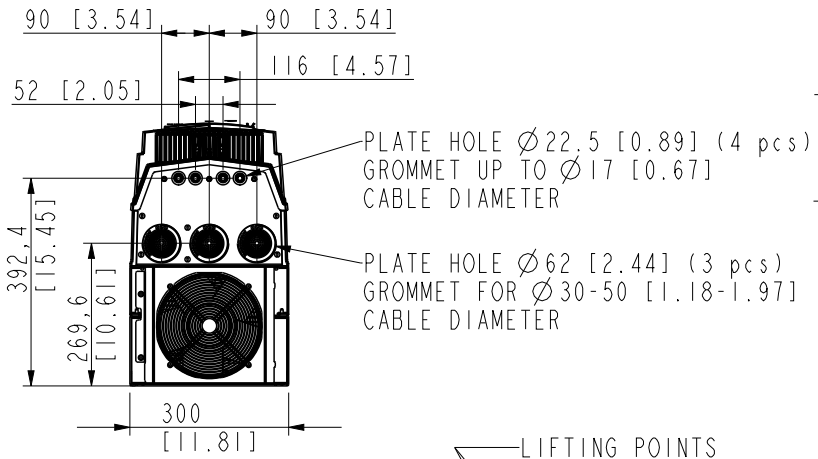

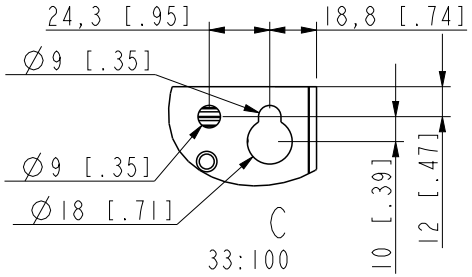

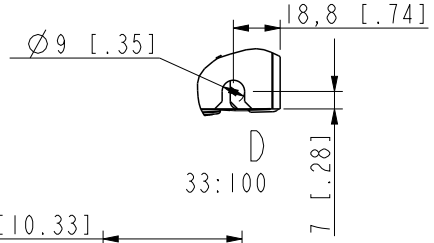

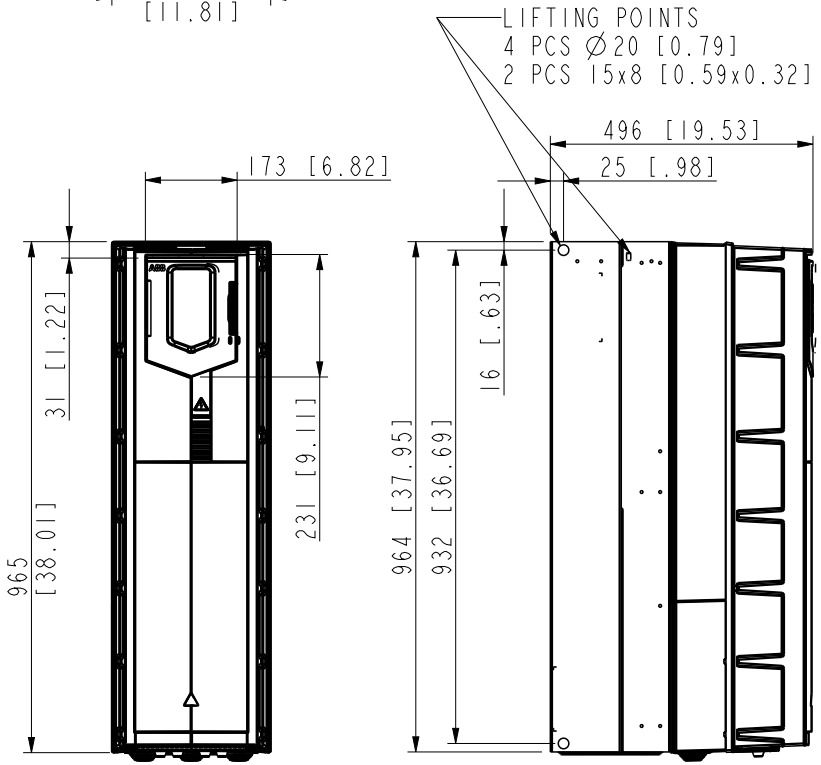

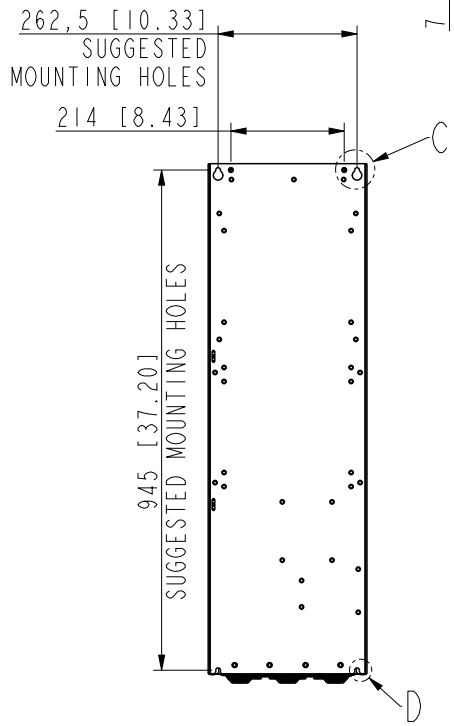

We reserve all rights in this document and in the information contained therein. Reproduction, use or disclosure to third parties without express authority is strictly forbidden. © ABB Oy. PROPRIETARY AND SECRET INFORMATION. CONFIDENTIAL

5000015631 20	J.Savolainen	27-Jan-21	
5000017067 13	V.Rantanen	06-Aug-21	

D	Added IP20 sheet, updated drawing titles	
E	Added IP55 height dimension	

3AXD50000147052 E.8+
ACXX80-XI_R8_MAIN_ASSEMBLY (ASSEM)35+

Based on	Prepared	J.Pekkarinen	02-Aug-17
Customer	Check.	J.Savolainen	25-Aug-21
	Appr.	H.Immonen	25-Aug-21
Cust. Doc. No.	Project name	Corinth	
DMS Number 3AXD10000629176	Weight kg		

Title DIMENSION DRAWING
ACH_ACQ580-31 R8 IP20/21/55
_

ABB

Doc. des. DIMENSION DRAWING	Scale 7:100	Form A4	
Resp.dept.	Rev.ind. E (AP)		Lang. EN
Doc. No. 3AXD50000147052			Sheet 3
			Total 3