INSTALLATION, OPERATION AND MAINTENANCE MANUAL

TransGuard™ — TG3™ Series

Surge protective device

Guide to installation and assistance

WARNING

Do not HIPOT the SPD unit or the electrical system to which the SPD unit is connected without disconnecting the SPD unit's conductors, including phases, neutral and ground.

Ne procédez PAS à des ESSAIS DE RIGIDITÉ DIÉLECTRIQUE sur le SPD ou le système électrique auquel il est connecté sans déconnecter les conducteurs des SPD, y compris les phases, le neutre et la terre.

WARNING

The SPD warranty is voided if the unit is damaged as a result of improper installation. Improper installation or misapplication may result in serious personal injury or damage to the electrical system. Read the complete installation instructions before proceeding with installation.

La garantie du SPD est annulée si l'appareil est endommagé à la suite d'une mauvaise installation. Une mauvaise installation, ou utilisation, peut entraîner des blessures graves ou des dégâts au système électrique. Lisez les instructions d'installation en intégralité avant de procéder à l'installation.

WARNING

The equipment covered by these instructions should be installed and serviced only by competent qualified personnel utilizing proper safety practices and procedures. These instructions are written for such personnel and are not intended as a substitute for adequate training and experience in safe procedures for this type of equipment.

L'équipement couvert par ces instructions doit être installé et entretenu uniquement par un personnel compétent et qualifié, utilisant des pratiques et des procédures de sécurité appropriées. Ces instructions sont rédigées à l'intention de ce personnel et ne sauraient se substituer à une formation adéquate et à une expérience des procédures de sécurité pour ce type d'équipement.

WARNING

Remove all power to the electrical panel before installing or servicing the SPD. All work must be performed by licensed and qualified personnel. Follow applicable electrical codes and regulations for the country/location in which the unit is being used.

Coupez l'alimentation du panneau électrique avant d'installer ou de procéder à l'entretien du SPD. Tous les travaux doivent être effectués par un personnel qualifié et agréé. Respectez les codes et réglementations électriques en vigueur dans le pays / lieu où l'appareil est utilisé.

CAUTION

Ungrounded power systems are inherently unstable and can produce excessively high line-to-ground voltages during certain fault conditions. During these fault conditions any electrical equipment, including an SPD, may be subjected to voltages, which exceed their designed ratings. This information is being provided to the user so that an informed decision can be made before installing any electrical equipment on an ungrounded power system.

Les réseaux électriques non mis à la terre sont intrinsèquement instables et peuvent produire des tensions ligne-terre excessivement élevées dans certaines conditions de défaut. Dans ces conditions de défaut, tout équipement électrique, y compris un SPD, peut être soumis à des tensions qui dépassent les valeurs nominales prévues. Cette information est fournie à l'utilisateur afin qu'il puisse prendre une décision réfléchie avant d'installer un équipement électrique sur un réseau électrique non mis à la terre.

⚠ WARNING

Check to ensure that a proper bond is installed between neutral and ground at the transformer upstream from all 3-phase wye, 3-phase high-leg, 2-phase or single-phase SPD devices. If the transformer is not accessible, check the main service disconnect/panel for the NG bond. Lack of a proper bond may damage the SPD and will void the warranty. Failure to provide this bond, as required per article 250.30 of the National Electrical Code, can result in elevated phase-to-ground source voltage potentials. These voltages can cause damage to electrical equipment as well as safety hazards including fire, electrical shock, serious injury or death.

Vérifiez qu'une liaison correcte est installée entre le neutre et la terre au niveau du transformateur en amont de tous les SPD triphasés en étoile, triphasés en triangle ou biphasés. Si le transformateur n'est pas accessible, vérifiez la liaison NG sur le sectionneur / panneau de service principal. L'absence d'une liaison appropriée peut endommager le SPD et annuler la garantie. L'absence de cette liaison, telle que requise par l'article 250.30 du Code national de l'électricité, peut entraîner des potentiels de tension élevés entre la phase et la terre. Ces tensions peuvent causer des dégâts aux équipements électriques ainsi que des risques en matière de sécurité, notamment des incendies, des chocs électriques, des blessures graves ou la mort.

⚠ WARNING

Installation by persons with electrotechnical expertise only.
WARNUNG!
Installation nur durch elektrotechnische Fachkraft.
AVERTISSEMENT!
Installation uniquement par des personned qualifiées électrotechnique.
IADVERTENCIA!
La instalación deberá ser realizada únicamente por electricistas especializados.

⚠ WARNING

This device is suitable for installation where the available short circuit current is 200,000 rms symmetrical amperes at 600 V AC or less.

L'appareil convient à une installation où le courant de court-circuit disponible est de 200 000 ampères symétriques efficaces à 600 VCA ou moins.

⚠ WARNING

For units with DTS-2 tester: When unit is equipped with an Amphenol test port, power to the equipment under test (EUT) must be OFF prior to testing. Turn EUT's disconnect switch or upstream circuit breaker to "OFF" position.

POUR LES UNITÉS AVEC TESTEUR DTS-2 : Lorsqu'une unité est équipée d'un port de test Amphenol, l'alimentation de l'équipement à tester (Equipment Under Test, EUT) doit être coupée avant le test. Mettez le sectionneur de l'EUT ou le disjoncteur en amont sur la position « OFF ».

Pre-installation checklist

Confirm that the voltage(s) and service configuration shown on the TG3 product label are consistent with the voltage and service configuration of the system to which it is being attached. A model number is printed on the label affixed to the inside of the TG3 cabinet. Each model number corresponds to the voltage and service configurations as per sample model number scheme in Table 1:

Table 1
Sample model number scheme
Example of model number: TG3-050-208-3Y-PNT-M6E-F2

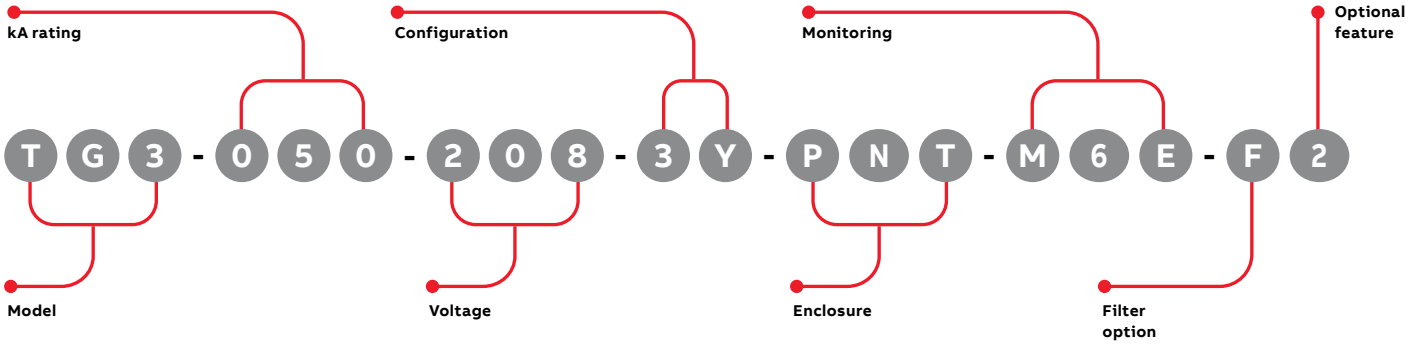

Table 1: Sample model number scheme (TG3)

kA rating
Available TG3 kA ratings:

050	050
080	080
100	100
125	125
150	150
200	200
250	250
300	300

Voltage*

208	120/208
240	120/240
380	220/380
480	277/480
600	347/600

Configuration*

1G	1-Phase, grounded
2G	2-Phase, grounded, split-phase
3Y	3-Phase, grounded, Wye
3R	3-Phase, grounded, high-resistance
3H	3-Phase, grounded, High-leg delta
3D	3-Phase, grounded, delta

Enclosure

MN	Metal without disconnect
MD	Metal with disconnect
SN	Stainless steel without disconnect
SD	Stainless steel with disconnect
PN	Fiberglass-reinforced polyester without disconnect

Cable entry

T	Top feed
B	Bottom feed

Monitoring

M0	No local monitoring (see remote MxX stand-alone option)
M1	LED/phase + audible alarm, dry relay contacts
M2	M1 + surge counter
M3	Advanced monitoring, character display, Modbus TCP
M4E	M3 + Ethernet, Modbus RTU
M5	Advanced monitoring, graphics display, Modbus RTU
M6E	M5 + Ethernet, Modbus TCP

Filter

F	Filter
N	No Filter

Optional features

2	Test port

Enhanced selenium available on 125 kA systems and above

Stand-alone options (to be ordered as separate items)

DTS	DTS-2 diagnostic test set
MXX	Remote monitor extension M1X through M6EX
HPI	HPI cable

*Consult factory for additional voltage/configuration options.

Pre-installation checklist continued

Check to ensure that a proper neutral-ground bond is installed between the neutral and ground terminals at the transformer upstream from all 3-phase wye, 3-phase high-leg delta or 1-phase split-phase TG3 devices (see NEC article 250). Lack of a proper bond will damage the TG3 and void the warranty.

Confirm that the environmental conditions are consistent with the following ranges:

- Ambient temperatures: The TG3 must be installed in an area with a temperature between -13 ° and +140 °F (-25 ° and +60 °C).
- Humidity: The TG3 must be installed in an area with relative humidity between 5% and 95% non-condensing.
- Altitude: The TG3 must be installed in a location where the altitude is below 13,000 feet.

CAUTION

Prior to installation, ensure the system configuration and voltage is equivalent to the SPD being installed.

Avant l'installation, assurez-vous que la configuration et la tension du système sont équivalentes à celles du SPD en cours d'installation.

WARNING

This device features an internal protection that will disconnect the surge protective component at the end of its useful life but will maintain power to the load now unprotected. If this situation is undesirable for the application, follow the manufacturer's instructions for replacing the device.

Cet appareil est doté d'une protection interne qui déconnectera le composant de protection contre les surtensions à la fin de sa vie utile tout en maintenant l'alimentation de la charge alors non protégée. Si cette situation n'est pas souhaitable pour l'application, suivez les instructions du fabricant pour remplacer l'appareil.

Installation methods

The TG3 is a Type 1 SPD that is suitable for use in both Type 1 and Type 2 SPD applications. The TG3 is a one-port SPD and is to be connected in parallel with the electrical system. It may be connected via a circuit breaker, molded case switch, fused switch or connected directly to the bus of the panelboard or switchboard it is protecting. If direct bus connection is used, it is recommended that the TG3 be equipped with the optional integral disconnect switch.

Service configurations

Figures 1–4 show the electrical relationship between the TG3 and these four basic service configurations: wye, delta, high-leg delta and split-phase.

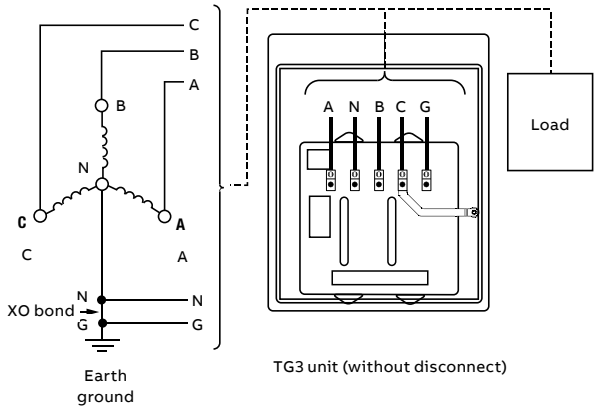

Figure 1 — 3-phase, 4-wire wye

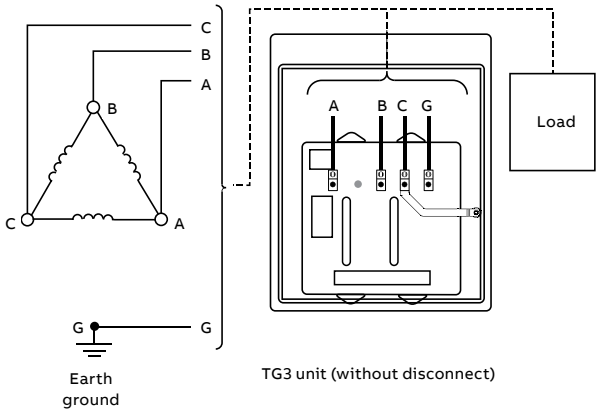

Figure 2 — 3-phase, 3-wire delta

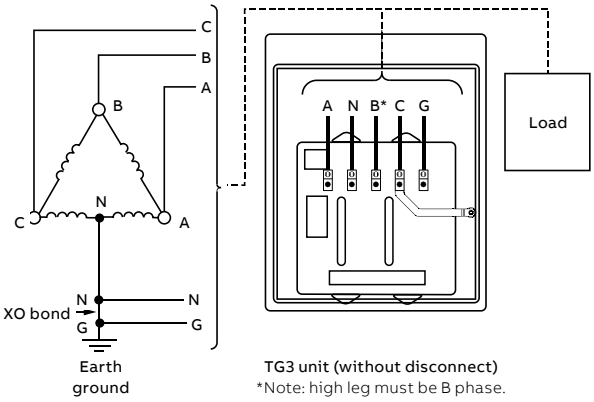

Figure 3 — 3-phase, 4-wire high-leg delta

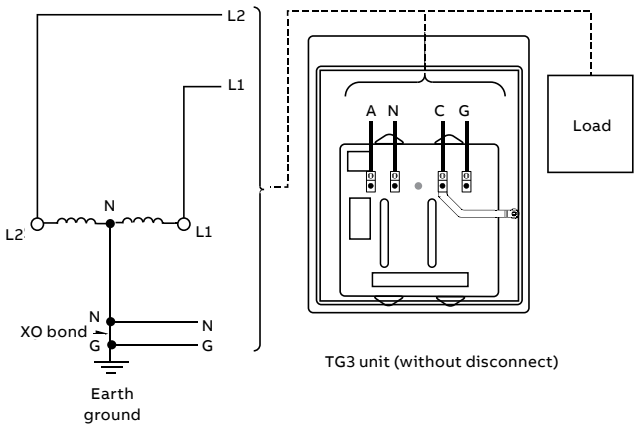

Figure 4 — 1-phase, 3-wire split-phase

Plan your installation

NOTICE

The SPD unit's performance will be degraded if the conductors are (a) too long, (b) are of too small a wire gauge, (c) have too many bends or (d) have sharp bends.

Les performances du SPD seront dégradées si les conducteurs sont (a) trop longs, (b) d'un calibre de fil trop faible, (c) présentent trop de courbures ou (d) ont des courbures trop prononcées.

These factors should be addressed during the design of an installation to ensure that there is a suitable place reserved for the stand-alone TG3 next to its point of connection to the panelboard it is protecting. The selected mounting location should ensure short conductor runs and a minimum of bends. If bends are required they should be sweeping bends. Do not make sharp 90° bends for aesthetic purposes.

Conductor sizing and overcurrent protection

Conductor length and sizing

Conductor length must be kept as short as possible and avoid sharp bends. Conductor length must never exceed 10 feet in length from phase bus through the TG3 to the neutral bus or ground bus. If the lead length must exceed 10 feet, use low impedance cable for installing the product. The following conductor sizes are recommended for phase, ground and neutral connections.

Table 2: Maximum recommended conductor size

Model	Use conductor lengths less than 10 feet
TG3-050	#6 AWG
TG3-080	#6 AWG
TG3-100	#6 AWG
TG3-125	#2 AWG
TG3-150	#2 AWG
TG3-200	#2 AWG
TG3-250	#2 AWG
TG3-300	#2 AWG

Note: Table 2 conductor sizing recommendations ensure that the effective clamping voltage of the TG3 at the point of connection is kept to a minimum in order to maximize protection.

Overcurrent protection

As a Type 1 SPD, the TG3 does not require upstream overcurrent protection for safe operation; however, the design may require or the installer may choose to connect the TG3 to a circuit breaker, molded case switch or fused disconnect.

Indoor vs outdoor installations

NEMA 12 enclosures are suitable for indoor use only. NEMA 4 enclosures are suitable for indoor or outdoor use. NEMA 4X (plastic and stainless steel) enclosures are suitable for corrosive environments as well. For direct sunlight applications, ABB suggests shading the monitoring components. All conduits and fittings must be rated and properly installed such that the final installation maintains the NEMA rating.

ABB recommends feeding all TG3 models not equipped with an integral disconnect with a circuit breaker, molded case switch or fused disconnect.

If a breaker or molded case switch is used for connecting the phase conductors, it is recommended to use a circuit breaker in the 60 to 100 amps range.

Neutral to ground filter jumper

TG3 models equipped with a filter system ("-F" suffix), and which have a neutral connection, come with a green jumper wire that loops out of the 3-pin connector on the ISM and connects a filter neutral to ground. In certain medical applications, or circuits that employ GFCI protection, this neutral to ground filter connection should be removed.

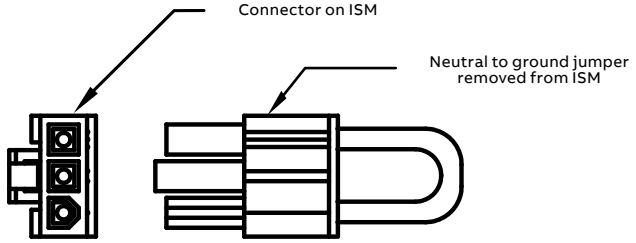

—
Figure 5

Removal is accomplished by pulling the green jumper from the connector on the ISM. Once removed, the jumper should be placed in the clear vinyl pocket containing the unit test data for future use if desired (Figure 5).

Conduit openings

Punch holes only in the shaded areas as shown in the following illustration.

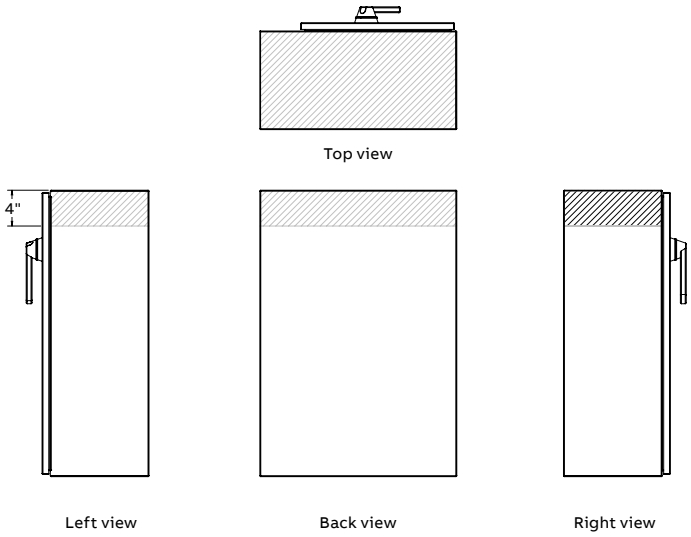

—
Figure 6 — Standard: top feed TG3 products (metallic enclosure, NEMA 4/12)

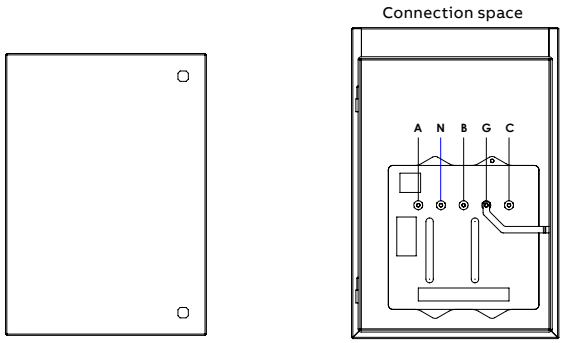

—
Top feed TG3 without disconnect

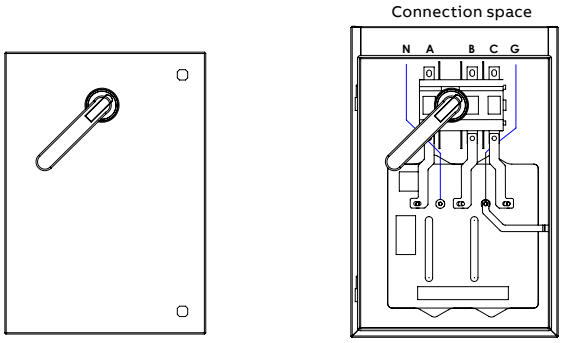

—
Top feed TG3 with disconnect

—
Figure 7 — Typical enclosure configurations for top-feed products (metallic enclosure, NEMA 4/12)

Conduit openings

Punch holes only in the shaded areas as shown in the following illustration.

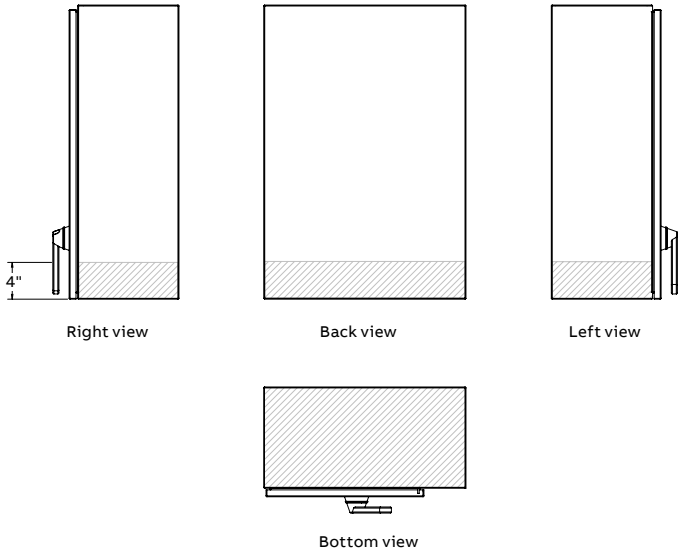

—
Figure 8 — Option: bottom-feed TG3 products (metallic enclosure, NEMA 4/12)

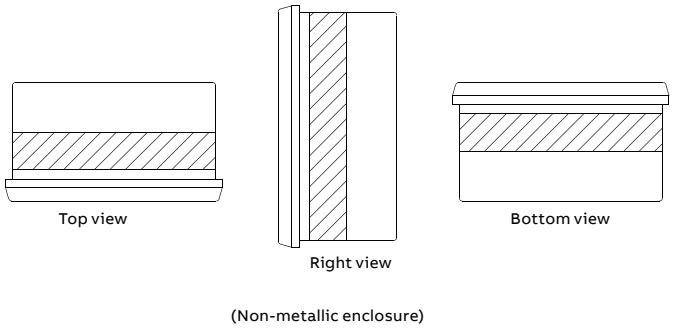

—
Figure 10 — Non-metallic enclosures (non-metallic enclosure, NEMA 4X)

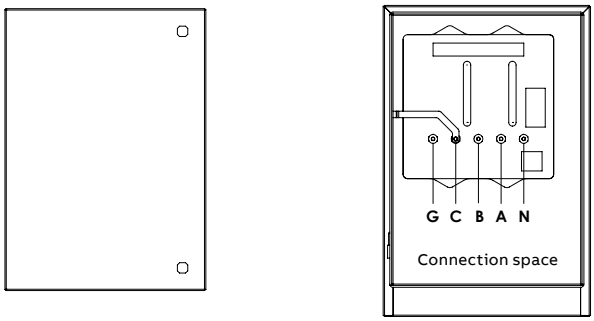

—
Bottom feed TG3 without disconnect

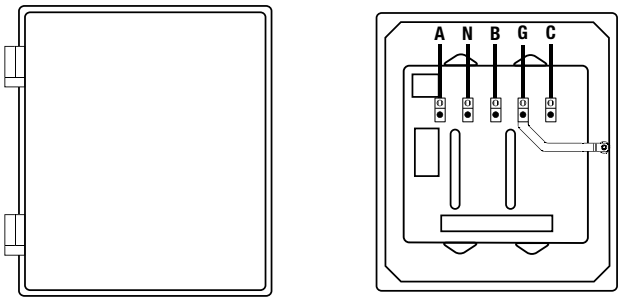

—
Figure 11— Typical enclosure configurations (non-metallic enclosure, NEMA 4X)

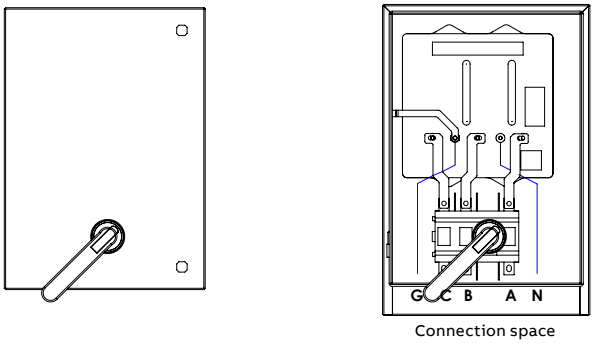

—
Bottom feed TG3 with disconnect

—
Figure 9 — Typical enclosure configurations for bottom-feed products (metallic enclosure, NEMA 4/12)

Mounting

Mount the TG3 to the building structure using construction methods and hardware appropriate for your site. Install the conduit and pull the conductors as specified in Figures 6–9 or according to the engineer's design.

If your TG3 is an open-frame type (that is, provided without an enclosure and designed for mounting inside switchgear or other user-provided enclosures), refer to the appendix for detailed dimensional data. This data is provided to aid in the design and fabrication of custom mounting arrangements unique to each type of open frame installation.

Electrical connections

Phases, neutral* and ground

Connect the phase, neutral and ground conductors.

For TG3 models equipped with an integral disconnect switch, remove the disconnect barrier, connect the phase conductors to the line-side lugs on the disconnect and the ground and neutral* conductors to the lugs labeled "G" and "N" on the blue device (ISM). Reinstall the disconnect barrier once all terminations have been made.

For TG3 models without an integral disconnect switch, connect the phase conductors to the lugs labeled "A", "B" and "C" on the ISM and the ground and neutral* conductors to the lugs labeled "G" and "N."

* Delta-configured TG3 models do not have a neutral lug.

Before applying power checklist

Field testing

Your TG3 has been carefully tested before leaving the factory. However, the performance of this unit as a surge suppression device can be confirmed in the field prior to startup using a portable DTS-2 tester.

Check with the owner or owner's representative to determine whether the optional DTS-2 tester or field startup testing service was purchased and required at your site.

Confirm pre-installation checklist

Confirm that the "Pre-Installation Checklist" was completed correctly before proceeding.

Confirm line voltage

Measure the line to line voltages feeding the panelboard or disconnect and be sure they are within ±10% of the rated line voltage of the TG3. Use the following table to determine the range of acceptable voltages for each model of the TG3. The power system operating frequency should be between 47–63 Hz.

Table 3: Acceptable voltage ranges for all TG3 models

TG3 model no.	Nominal L-L voltage	-10% to +10% L-L voltage
TG3-xxx-240-2G-xxx-xx-xx	240	216 to 264
TG3-xxx-208-3Y-xxx-xx-xx	208	188 to 228
TG3-xxx-380-3Y-xxx-xx-xx	380	342 to 419
TG3-xxx-480-3Y-xxx-xx-xx	480	432 to 528
TG3-xxx-600-3Y-xxx-xx-xx	600	540 to 660
TG3-xxx-240-3H-xxx-xx-xx	240	216 to 264
TG3-xxx-240-3D-xxx-xx-xx	240	216 to 264
TG3-xxx-480-3D-xxx-xx-xx	480	432 to 528
TG3-xxx-600-3D-xxx-xx-xx	600	540 to 660

Note: First "xxx" specifies rating of 050, 080, 100, 125, 150, 200, 250, 300 kA

CAUTION

Do not apply power if the measured voltage is not within the range specified for the TG3 being installed.

Avant l'installation, assurez-vous que la configuration et la tension du système sont équivalentes à celles du TG3 en cours d'installation.

Apply power to the TG3 by closing the circuit breaker or switch (if any) feeding the TG3 or closing the TG3 integral disconnect.

Verify proper operation

If your TG3 has M1 standard monitoring (see Figure 12):
Verify that only the green indicator lights are illuminated and no red lights are illuminated. Green lights indicate a normal condition for each phase. Orange lights indicate protection of 40–75% and red lights indicate protection of <40%. Three-phase units have three (3) green indicating lights labeled “A”, “B” and "C." Split-phase units should only have lights “A” and “C” illuminated. See table on following page for LED status indication.

M1 standard monitoring is equipped with a dual set of form “C” contacts (see Figure 15). The relay containing the contacts is in the “alarm condition” or normally closed when the power is off to the unit, the unit is encountering loss of power to one or more phases, or the TG3 is encountering more than 40% loss of capacity due to internal fuse operation. Test the operation of the form “C” contacts by de-energizing the TG3 and checking the state of the contacts with a continuity tester or observing the effect of the contacts on the user provided remote alarm circuits.

If your TG3 has the M2 option (See Figure 13):
The M2 option is equipped with a surge counter. The number of surges detected by the counter is displayed on a 6-digit LCD display on the front of the TG3 door. The surge counter will also increment each time power is applied to the unit after being in the “off” state. The counter can be reset by pressing the button on the front of the counter.

The M1 and M2 standard monitoring also contain an audible alarm that should not operate under normal conditions. To silence audible alarm, press alarm silence button on display.

If your TG3 is equipped with the MasterMind™ advanced monitoring option (see Figure 14):
Please refer to the MasterMind™ manual for specifications and operation.

Figure 12: TG3 with M1 standard monitoring

Figure 13: TG3 with M2 standard monitoring with surge counter

Figure 14: TG3 with MasterMind™ advanced monitoring

Verify proper operation

Table 4: LED and display alarm status conditions

Condition	Corresponding phase LED	Alarm condition	M3 status message**	Priority *
Phase loss (<80%)	LED off	Y	Alarm: phase x loss	1A
Phase low (80 to <90%)	LED short blink green (≈25% duty)	Y	Alarm: phase x low	1B
Phase high (>110%)	LED long blink green (≈75% duty)	Y	Alarm: phase x high	1C
N-G overvoltage	N/A	Y	Alarm: N-G voltage high	2
Frequency out of range	N/A	Y	Alarm: frequency out of range	3
% Protection < XX%	LED on red	Y	Alarm: protection x low	4
Filter/cap loss	LED blink red once every 2 seconds	Y	Alarm: protection filter x loss	5
% Protection XX to YY%	LED on orange	N	Alarm: protection x reduced	6

Notes:
*1. Highest priority takes precedence: i.e. if phase is lost, LED is off, no blinking even if filter loss. Alarm condition means the audible alarm is on, dry relay contacts are off (de-energized), and system alarm LED is on.
2. % Protection levels of 40% and 75% are default settings that can be changed by the user (M3 system only). If the surge module or current rating settings are changed, the protection levels will change automatically.
**3. Subsequent status message will be displayed on M3 character and graphics displays, where "x" is corresponding phase (A, B, C or L1, L2). The highest priority condition will over-write earlier conditions. Messages may be truncated to fit screen area.
4. Red system status LED will remain on after status has returned to normal. User must clear the status by pressing the M3 cancel button.
5. Alarm conditions will be logged in the events log.

Connecting form "C" dry contacts

Dry contacts:
All TG3 models have a dual set of form "C" dry contacts available for connection to user-provided remote alarm and monitoring circuits.

The installer must provide the appropriate raceway and wiring for this circuit observing the restrictions on conduit openings illustrated in an earlier section of this manual. The installer is responsible for mounting the monitoring conductors to the blue terminal blocks on the door-mounted circuit board. Choose the appropriate materials and routing to allow the door to open and close without pinching or stressing wires.

Figure 15 shows the form "C" contact configuration. The annotations on the diagram match the markings on the blue terminal block.

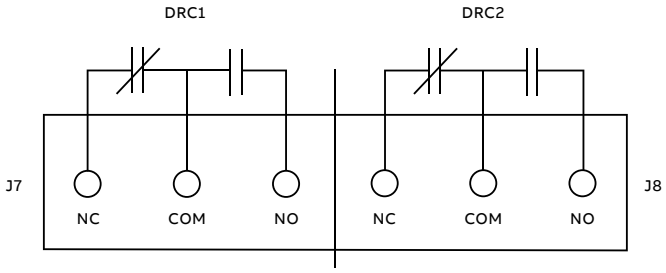

Figure 15 — FCC terminal block:
- Rated 1 A/30 V DC and 0.5 A/125 V AC, resistive
- 14–22 AWG, 4.4 in-lbs (0.5 Nm)
- Contacts shown in non-energized state

Troubleshooting

The following indications and procedures can be checked (see Table 5):

Table 5: Troubleshooting checklist

Indication	Procedure
One or more phase indicator lights are off	• Check that the external power source supplying power to unit is energized • Check that the circuit breaker or switch (if appropriate) feeding the PX3 is turned "on"
Phase status lights are orange, indicating 40–75% protection Phase status lights are red, indicating <40% protection	• Check the cables connecting the door-mounted devices to the suppression module. Exercise caution as High Voltage is present on door mounted PCBs
Portable diagnostic test set indications are not in range for the product (if using a DTS-2 test set, ranges are located on the underside of the DTS-2 lid)	Contact factory

Please note — If breaker is tripped, use a portable diagnostic test set to verify unit integrity before resetting the breaker.
Please contact factory for additional assistance.

Serviceability

The unit contains no serviceable parts.
(Avertissement: Aucune pièce remplaçable ou réparable.)

ABB does not provide a specific schedule for periodic maintenance as conditions will vary based on location and environmental factors presented at each installation site. However, inspections should be scheduled to verify that the SPD does not indicate a failure mode. Inspections should also be made to check the integrity of the electrical supply connections and to verify the SPD is clamping surges to an acceptable level.

Options

The TG3 surge suppression system is available with the following options:

M1	LED/phase + audible alarm, dry relay contacts
M2	M1 + surge counter
M3	Advanced monitoring, character display, Modbus TCP
M4E	M3 + Ethernet, Modbus RTU
M5	Advanced monitoring, graphics display, Modbus RTU
M6E	M5 + Ethernet, Modbus TCP

Stand-alone options

DTS	DTS-2 diagnostic test set
MxX	Remote monitor extension M1X through M8EX
HPI	HPI cable

Standards and listings

The following standards and listings apply to the TG3 product line:

- UL Listed 1449 5th Edition for Type 1 and Type 2 SPD applications, cUL and UL 1283

The following standards and listings also apply (not verified by UL):

- Type 1 SPDs meet requirements for UL 96A
- Compliant to IEEE C62.41.1-2002, C62.41.2-2002 and C62.45-2002
- NFPA 70 [NEC], Article 242, Part II
- RoHS compliant
- Meets requirements for UL 96A

Appendix

Open frame with disconnect dimensions

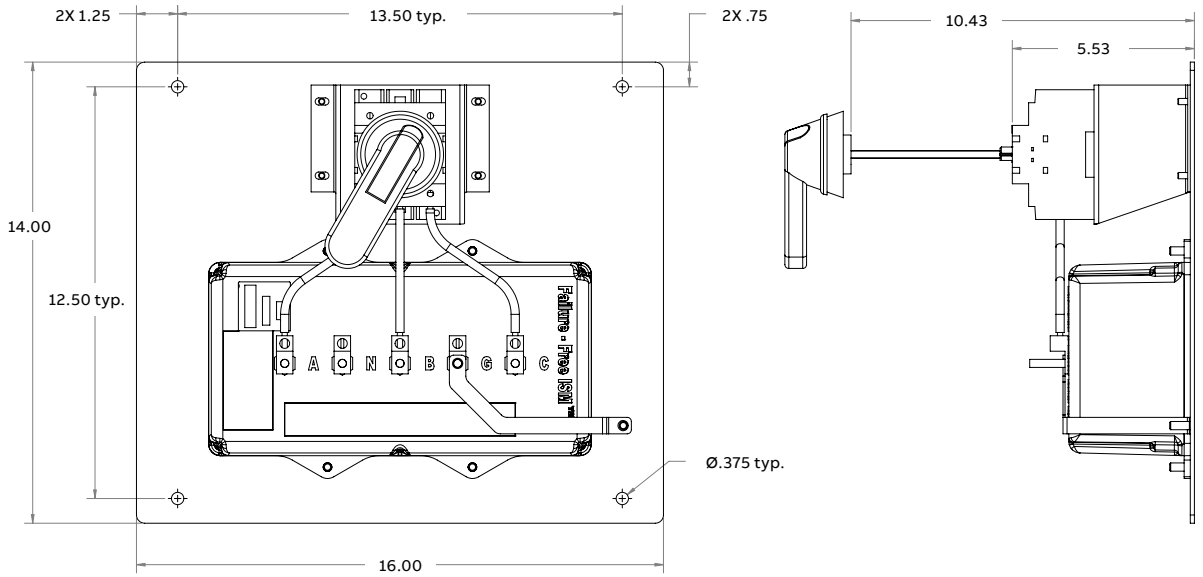

Figure 16 — TG3 050 – 100

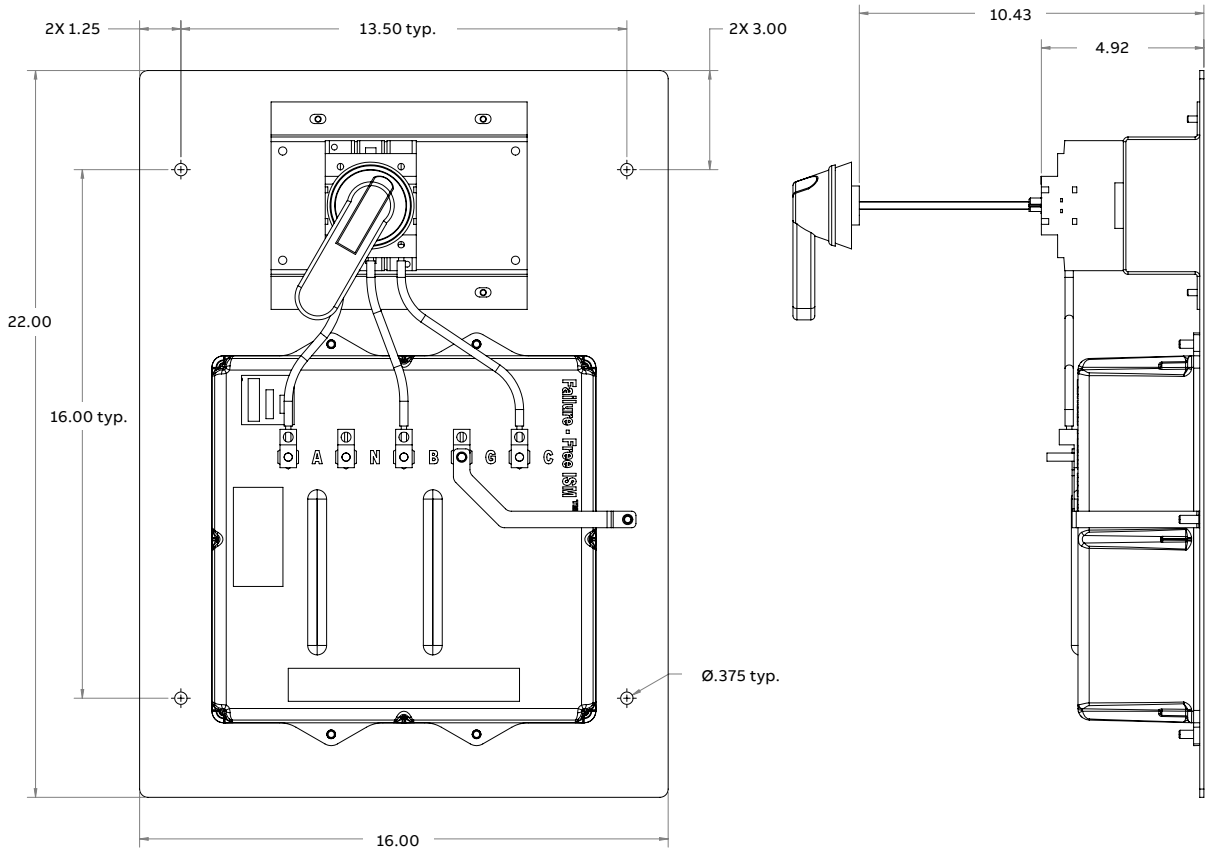

Figure 17 — TG3 125 – 200

Note: All dimensions are in inches

Appendix

Enclosure dimensions

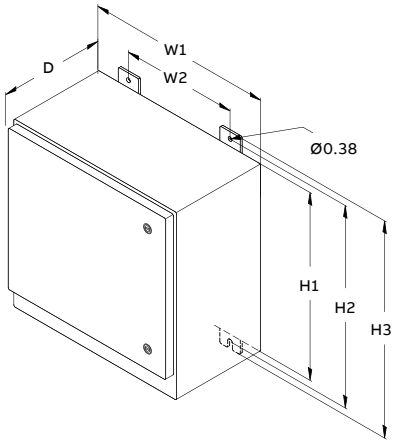

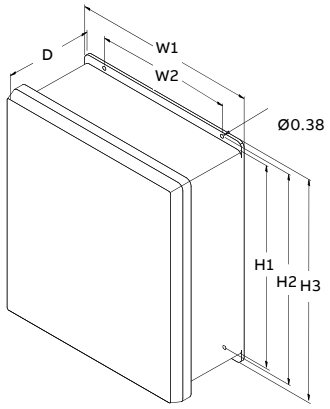

—
Figure 18 — TG3 050–100

Metal TG3	Inches	(mm)
H1	16.00	(406.4)
H2	17.25	(438.2)
H3	18.50	(469.9)
W1	16.00	(406.4)
W2	10.00	(254.0)
D	9.20	(233.7)

Fiberglass reinforced polyester TG3	Inches	(mm)
H1	14.00	(355.6)
H2	14.75	(374.7)
H3	15.50	(393.7)
W1	12.75	(323.9)
W2	10.00	(254.0)
D	6.60	(167.6)

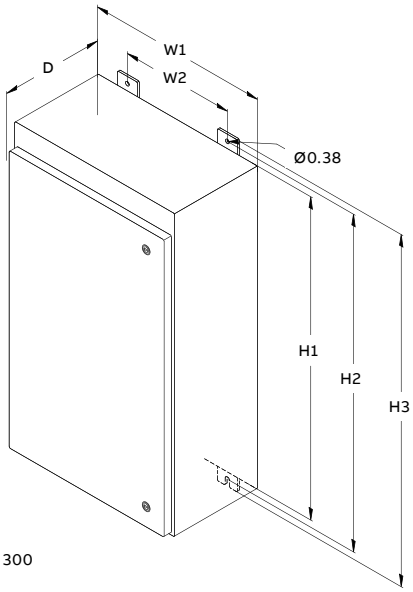

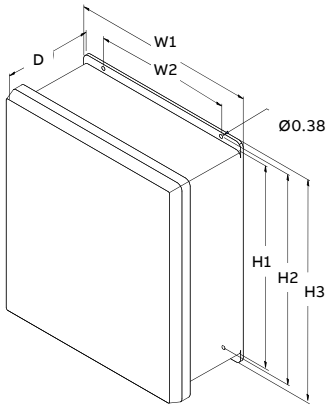

—
Figure 19 — TG3 125 – 300

Metal TG3	Inches	(mm)
H1	24.00	(609.6)
H2	25.25	(641.4)
H3	26.50	(673.1)
W1	16.00	(406.4)
W2	10.00	(254.0)
D	9.20	(233.7)

Fiberglass reinforced polyester TG3	Inches	(mm)
H1	16.75	(425.5)
H2	16.75	(425.5)
H3	17.50	(444.5)
W1	14.75	(374.7)
W2	12.00	(304.3)
D	6.67	(169.4)

Appendix

Cut-out templates

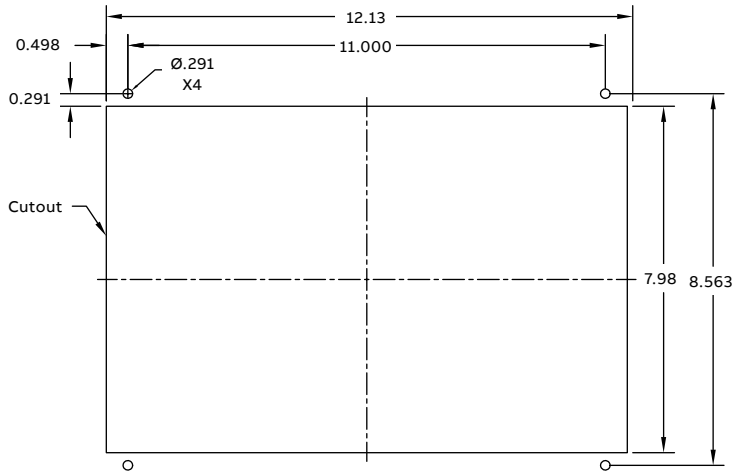

Figure 20: M2X–M6EX cut-out template

Note: All dimensions are in inches

Warranty

ABB warrants that Equipment (excluding Software) shall be delivered free of defects in material and workmanship. The Warranty Remedy Period for Equipment (excluding Software) shall end fifteen (15) years after the original date of purchase. If a nonconformity to the foregoing warranty is discovered in the Equipment during the applicable Warranty Remedy Period, as specified above, under normal and proper use and provided the Equipment has been properly stored, installed, operated and maintained and written notice of such nonconformity is provided to ABB promptly after such discovery and within the applicable Warranty Remedy Period, ABB shall, at its option, either (i) repair or replace the nonconforming portion of the Equipment or (ii) refund the portion of the price applicable to the nonconforming portion of Equipment. If any portion of the Equipment so repaired or replaced fails to conform to the foregoing warranty, and written notice of such nonconformity is provided to ABB promptly after discovery and within the original Warranty Remedy Period applicable to such Equipment or 30 days from completion of such repair, replacement or re-performance, whichever is later, ABB will repair or replace such nonconforming Equipment. The original Warranty Remedy Period shall not otherwise be extended. ABB shall not be responsible for providing temporary power, removal, installation, reimbursement for labor costs or working access to the nonconforming Equipment, including disassembly and re assembly of non-ABB supplied equipment, or for providing transportation to or from any repair facility, or for any other expenses incurred in connection with the repair or replacement, all of which shall be at Purchaser's risk and expense. ABB shall have no obligation hereunder with respect to any Equipment which (i) has been improperly repaired or altered; (ii) has been subjected to misuse, negligence or accident; (iii) has been used in a manner contrary to ABB's instructions; (iv) is comprised of materials provided by or a design specified by Purchaser; or (v) has failed as a result of ordinary wear and tear. Equipment supplied by ABB but manufactured by others is warranted only to the extent of the manufacturer’s warranty, and only the remedies, if any, provided by the manufacturer will be allowed. Software Warranty and Remedies. ABB warrants that, except as specified below, the Software will, when properly installed, execute in accordance with ABB's published specification. If a nonconformity to the foregoing warranty is discovered during the period ending one (1) year after the date of shipment and written notice of such nonconformity is provided to ABB promptly after such discovery and within that period, including a description of the nonconformity and complete information about the manner of its discovery, ABB shall correct the nonconformity by, at its option, either (i) modifying or making available to the Purchaser instructions for modifying the Software; or (ii) making available at ABB's facility necessary corrected or replacement programs. ABB shall have no obligation with respect to any nonconformities resulting from (i) unauthorized modification of the Software or (ii) Purchaser-supplied software or interfacing. ABB does not warrant that the functions contained in the software will operate in combinations which may be selected for use by the Purchaser, or that the software products are free from errors in the nature of what is commonly categorized by the computer industry as “bugs.”

THE FOREGOING WARRANTIES ARE EXCLUSIVE AND IN LIEU OF ALL OTHER WARRANTIES OF QUALITY AND PERFORMANCE, WHETHER WRITTEN, ORAL OR IMPLIED, AND ALL OTHER WARRANTIES INCLUDING ANY IMPLIED WARRANTIES OF MERCHANTABILITY OR FITNESS FOR A PARTICULAR PURPOSE OR USAGE OF TRADE ARE HEREBY DISCLAIMED. THE REMEDIES STATED HEREIN CONSTITUTE PURCHASER’S EXCLUSIVE REMEDIES AND ABB’S ENTIRE LIABILITY FOR ANY BREACH OF WARRANTY.

Notes

USA
ABB Inc.
5900 Eastport Blvd.
Richmond, VA 23231-4453
(888) 385-1221

electrification.us.abb.com/products/surge-protective-devices

ABB has made every attempt to ensure the accuracy and reliability of the contents of this document. However, all content is provided for general informational purposes only, and ABB makes no guaranty or warranty, express or implied, as to the accuracy of any technical content, or that the information contained in this publication will be error free and all such guarantees or warranties are expressly disclaimed. ABB may change or modify the contents at any time, without prior notice. We reserve all rights in this document and in the subject matter and illustrations contained therein. Any reproduction or utilization of its contents — in whole or in parts — is forbidden without prior written consent of ABB.
© 2023 ABB Inc.
All rights reserved.

PN 750-0068-003 E 02.2023