INSTALLATION, OPERATION AND MAINTENANCE MANUAL

CG3 and CGP3 SPDs

CurrentGuard® and CurrentGuard® Plus

Guide to installation and assistance

WARNING

Do not HIPOT the SPD unit or the electrical system to which the SPD unit is connected without disconnecting the SPD unit's conductors, including phases, neutral and ground.

Ne procédez PAS à des ESSAIS DE RIGIDITÉ DIÉLECTRIQUE sur le SPD ou le système électrique auquel il est connecté sans déconnecter les conducteurs des SPD, y compris les phases, le neutre et la terre.

WARNING

The SPD warranty is voided if the unit is damaged as a result of improper installation. Improper installation or misapplication may result in serious personal injury or damage to the electrical system. Read the complete installation instructions before proceeding with installation.

La garantie du SPD est annulée si l'appareil est endommagé à la suite d'une mauvaise installation. Une mauvaise installation, ou utilisation, peut entraîner des blessures graves ou des dégâts au système électrique. Lisez les instructions d'installation en intégralité avant de procéder à l'installation.

WARNING

The equipment covered by these instructions should be installed and serviced only by competent qualified personnel utilizing proper safety practices and procedures. These instructions are written for such personnel and are not intended as a substitute for adequate training and experience in safe procedures for this type of equipment.

L'équipement couvert par ces instructions doit être installé et entretenu uniquement par un personnel compétent et qualifié, utilisant des pratiques et des procédures de sécurité appropriées. Ces instructions sont rédigées à l'intention de ce personnel et ne sauraient se substituer à une formation adéquate et à une expérience des procédures de sécurité pour ce type d'équipement.

WARNING

Remove all power to the electrical panel before installing or servicing the SPD. All work must be performed by licensed and qualified personnel. Follow applicable electrical codes and regulations for the country/location in which the unit is being used.

Coupez l'alimentation du panneau électrique avant d'installer ou de procéder à l'entretien du SPD. Tous les travaux doivent être effectués par un personnel qualifié et agréé. Respectez les codes et réglementations électriques en vigueur dans le pays / lieu où l'appareil est utilisé.

CAUTION

Ungrounded power systems are inherently unstable and can produce excessively high line-to-ground voltages during certain fault conditions. During these fault conditions any electrical equipment, including an SPD, may be subjected to voltages, which exceed their designed ratings. This information is being provided to the user so that an informed decision can be made before installing any electrical equipment on an ungrounded power system.

Les réseaux électriques non mis à la terre sont intrinsèquement instables et peuvent produire des tensions ligne-terre excessivement élevées dans certaines conditions de défaut. Dans ces conditions de défaut, tout équipement électrique, y compris un SPD, peut être soumis à des tensions qui dépassent les valeurs nominales prévues. Cette information est fournie à l'utilisateur afin qu'il puisse prendre une décision réfléchie avant d'installer un équipement électrique sur un réseau électrique non mis à la terre.

⚠ WARNING

Check to ensure that a proper bond is installed between neutral and ground at the transformer upstream from all 3-phase wye, 3-phase high-leg, 2-phase or single-phase SPD devices. If the transformer is not accessible, check the main service disconnect/panel for the NG bond. Lack of a proper bond may damage the SPD and void the warranty. Failure to provide this bond, as required per article 250.30 of the National Electrical Code, can result in elevated phase-to-ground source voltage potentials. These voltages can cause damage to electrical equipment as well as safety hazards including fire, electrical shock, serious injury or death.

Vérifiez qu'une liaison correcte est installée entre le neutre et la terre au niveau du transformateur en amont de tous les SPD triphasés en étoile, triphasés en triangle ou biphasés. Si le transformateur n'est pas accessible, vérifiez la liaison NG sur le sectionneur / panneau de service principal. L'absence d'une liaison appropriée peut endommager le SPD et annuler la garantie. L'absence de cette liaison, telle que requise par l'article 250.30 du Code national de l'électricité, peut entraîner des potentiels de tension élevés entre la phase et la terre. Ces tensions peuvent causer des dégâts aux équipements électriques ainsi que des risques en matière de sécurité, notamment des incendies, des chocs électriques, des blessures graves ou la mort.

⚠ WARNING

Installation by persons with electrotechnical expertise only.
WARNUNG!
Installation nur durch elektrotechnische Fachkraft.
AVERTISSEMENT!
Installation uniquement par des personned qualifiées électrotechnique.
¡ADVERTENCIA!
La instalación deberá ser realizada únicamente por electricistas especializados.

Pre-installation checklist

Confirm that the voltage(s) and service configuration shown on the CG3 or CGP3 series product label are consistent with the voltage and service configuration of the facility. The SPD model number can be found on the UL label affixed to the SPD enclosure. The SPD selection can be verified by comparing the model number to the correct electrical system.

Sample model number scheme

Example of an SPD model number: CG3-VVV-080-3Y-W(ML)UF or CGP3-VVV-200-3Y-W(PL)F
Please note that if the model number ends with T2, the unit is compliant with UL 1283.

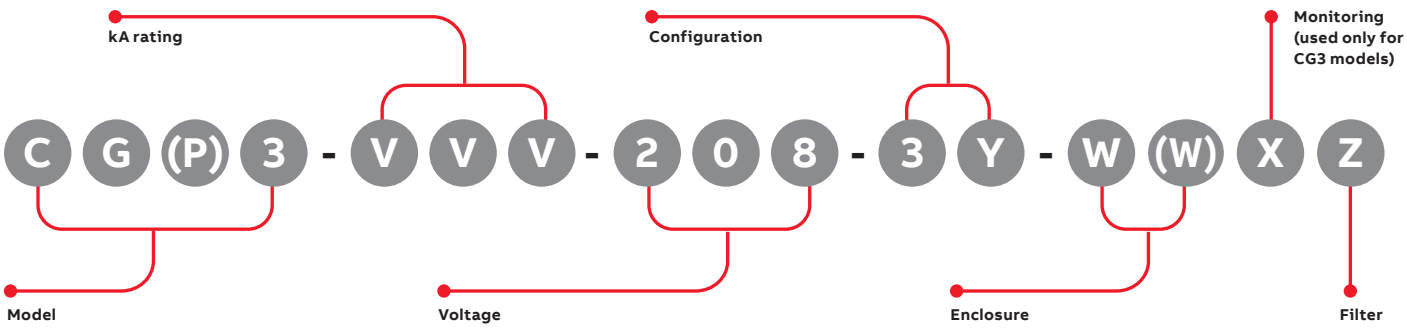

Operating voltage ranges

CurrentGuard model number	CurrentGuard Plus model number	Unit voltages (V)	L-N operating voltage range (V) Not verified by UL	L-L operating voltage range (V) Not verified by UL	Configuration
CG3-VVV-120-1G-W(W)XZ	CGP3-VVV-120-1G-W(W)Z	120-1G	108–132	–	120 V 1-phase, 2-wire + ground
CG3-VVV-127-1G-W(W)XZ	CGP3-VVV-127-1G-W(W)Z	127-1G	114–139	–	127 V 1-phase, 2-wire + ground
CG3-VVV-220-1G-W(W)XZ	CGP3-VVV-220-1G-W(W)Z	220-1G	198–242	–	220 V 1-phase, 2-wire + ground
CG3-VVV-230-1G-W(W)XZ	CGP3-VVV-230-1G-W(W)Z	230-1G	207–253	–	230 V 1-phase, 2-wire + ground
CG3-VVV-240-1G-W(W)XZ	CGP3-VVV-240-1G-W(W)Z	240-1G	216–264	–	240 V 1-phase, 2-wire + ground
CG3-VVV-277-1G-W(W)XZ	CGP3-VVV-277-1G-W(W)Z	277-1G	249–304	–	277 V 1-phase, 2-wire + ground
CG3-VVV-347-1G-W(W)XZ	CGP3-VVV-347-1G-W(W)Z	347-1G	312–381	–	347 V 1-phase, 2-wire + ground
CG3-VVV-240-2G-W(W)XZ	CGP3-VVV-240-2G-W(W)Z	240-2G	108–132	216–264	240/120 V 2-phase, 3-wire + ground
CG3-VVV-480-2G-W(W)XZ	CGP3-VVV-480-2G-W(W)Z	480-2G	216–264	432–528	480/240 V 2-phase, 3-wire + ground
CG3-VVV-600-2G-W(W)XZ	CGP3-VVV-600-2G-W(W)Z	600-2G	312–381	540–660	600/300 V 2-phase, 3-wire + ground
CG3-VVV-240-3H-W(W)XZ	CGP3-VVV-240-3H-W(W)Z	240-3H	108–132	216–264	240Δ /120 V 3-phase High-Leg, 4-wire + ground
CG3-VVV-208-3Y-W(W)XZ	CGP3-VVV-208-3Y-W(W)Z	208-3Y	108–132	187–229	208Y/120 V 3-phase Wye, 4-wire + ground
CG3-VVV-380-3Y-W(W)XZ	CGP3-VVV-380-3Y-W(W)Z	380-3Y	198–242	342–418	380Y/220 V 3-phase Wye, 4-wire + ground
CG3-VVV-400-3Y-W(W)XZ	CGP3-VVV-400-3Y-W(W)Z	400-3Y	207–253	360–440	400Y/230 V 3-phase Wye, 4-wire + ground
CG3-VVV-415-3Y-W(W)XZ	CGP3-VVV-415-3Y-W(W)Z	415-3Y	216–264	374–457	415Y/240 V 3-phase Wye, 4-wire + ground
CG3-VVV-480-3Y-W(W)XZ	CGP3-VVV-480-3Y-W(W)Z	480-3Y	249–305	432–528	480Y/277 V 3-phase Wye, 4-wire + ground
CG3-VVV-600-3Y-W(W)XZ	CGP3-VVV-600-3Y-W(W)Z	600-3Y	312–381	540–660	600Y/347 V 3-phase Wye, 4-wire + ground
CG3-VVV-208-3D-W(W)XZ	CGP3-VVV-208-3D-W(W)Z	208-3D	–	187–228	208 V 3-phase Delta, 3-wire + ground
CG3-VVV-240-3D-W(W)XZ	CGP3-VVV-240-3D-W(W)Z	240-3D	–	216–264	240 V 3-phase Delta, 3-wire + ground
CG3-VVV-415-3D-W(W)XZ	CGP3-VVV-415-3D-W(W)Z	415-3D	–	373–456	415 V 3-phase Delta, 3-wire + ground
CG3-VVV-480-3D-W(W)XZ	CGP3-VVV-480-3D-W(W)Z	480-3D	–	432–528	480 V 3-phase Delta, 3-wire + ground
CG3-VVV-600-3D-W(W)XZ	CGP3-VVV-600-3D-W(W)Z	600-3D	–	540–660	600V 3-phase Delta, 3 wire + ground

VVV = kA rating: 040 (CG3 models only), 060, 080, 100, 125, 150 or 200 kA.
W(W) = enclosure options: P (polycarbonate), M (metal), S (stainless steel), PL (polycarbonate with termination lugs), ML (metal with termination lugs) or SL (stainless steel with termination lugs); note that termination lugs are only available with the large enclosure and only for 60–200 kA units.
X = monitoring options (CG3 models only: U (standard LEDs, dry relay contacts, audible alarm, alarm silence button, fault light) or B (standard LEDs – one per phase). No options for CGP3 models, which come standard with tri-color LEDs, surge counter, dry relay contacts, audible alarm, alarm silence button and fault light.
Z = filter options: N (no filter), F (filter) or T2 (UL 1283 approved filter for Type 2 device).

Confirm that the environmental conditions are consistent with the following ranges:

- Ambient temperatures: Between -35 to 70 °C (-31 to 158 °F).
- Relative humidity: Between 5% and 95% non-condensing.
- Altitude: Less than 4000 m (13,000 feet) (not verified by UL).

Service configurations

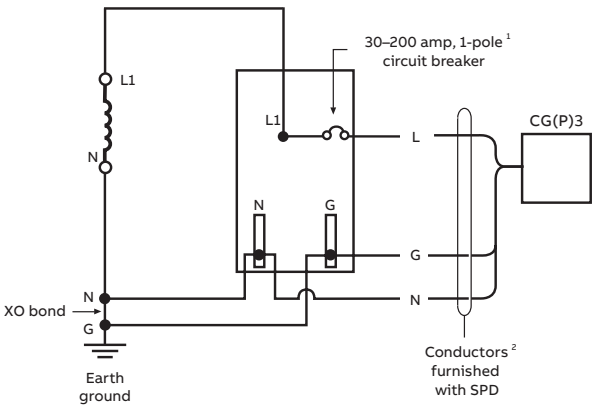

Figure 1: 1-phase, 2-wire

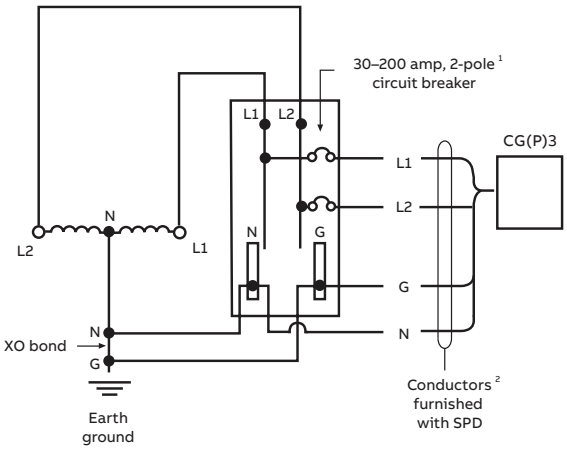

Figure 2: 1-phase, 3-wire

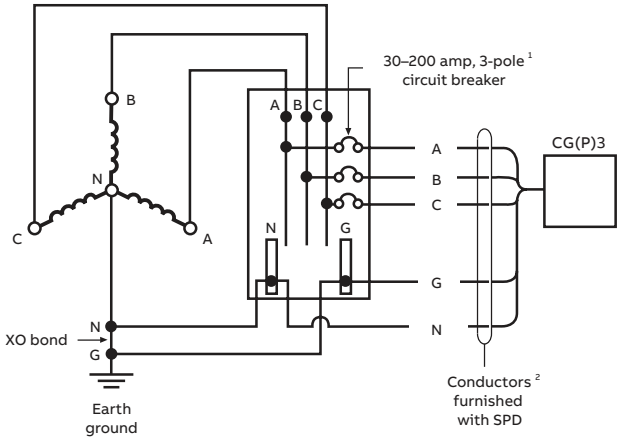

Figure 3: 3-phase wye, 4-wire

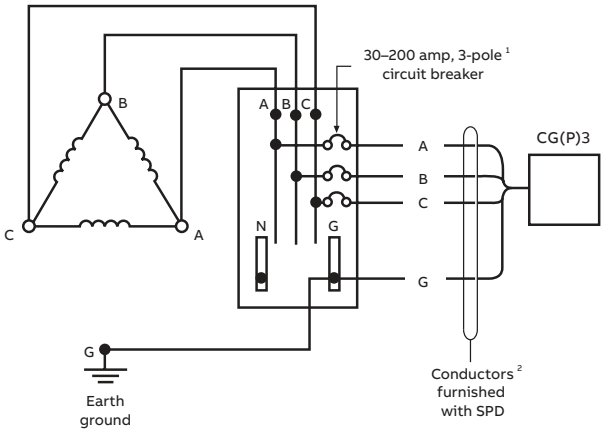

Figure 4: 3-phase delta, 3-wire

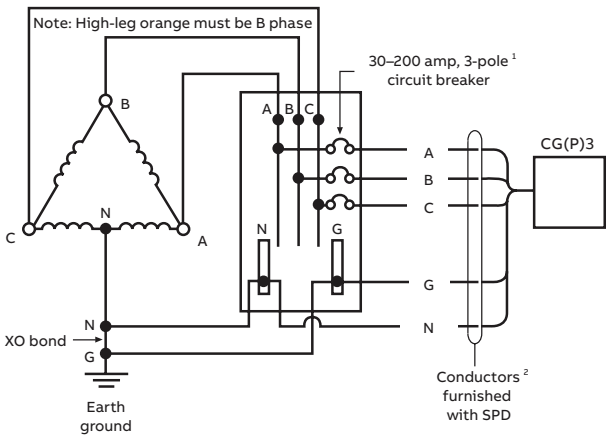

Figure 5: 3-phase high-leg delta, 4-wire

[1] Please refer to the "OCPD" chart to determine if the SPD requires an upstream breaker/fuse. A CG3 or CGP3 series unit can be connected without an upstream breaker/fuse if it does NOT contain a filter. If CG3 or CGP3 series has filter, it must be connected behind an upstream breaker/fuse.
[2] CG3 40 kA is furnished with #10 AWG leads. CG3 and CGP3 60 through 100 kA are furnished with #6 AWG leads, and 125 through 200 kA are furnished with #10 through #4 AWG lugs. Additionally, units with an ML, PL or SL in part number.

Conductors

NOTICE

The SPD unit's performance will be degraded if the conductors are (a) too long, (b) are of too small a wire gauge, (c) have too many bends or (d) have sharp bends.

Les performances du SPD seront dégradées si les conducteurs sont (a) trop longs, (b) d'un calibre de fil trop faible, (c) présentent trop de courbures ou (d) ont des courbures trop prononcées.

The factors listed above should be addressed during the design of an installation to reserve a suitable place for the CG3 or CGP3 series unit next to its point of connection to the electrical system. The selected mounting location should allow for the shortest possible conductor runs and a direct route with a minimum of bends. If bends are required, they should be sweeping bends. Do not make sharp 90° bends for appearance purposes because they will decrease the effectiveness of the CG3 or CGP3 series unit.

Binding or twisting conductors together using cable ties or electrical tape improves the protection performance of the device.

Maximum recommended conductor size for termination lugs SPDs

Production label designation	Surge current capability	Conductor size
CG040-xxxxx	40 kA/mode	#10 AWG
CG(P)060-xxxxx	60 kA/mode	#6 AWG
CG(P)080-xxxxx	80 kA/mode	#6 AWG
CG(P)100-xxxxx	100 kA/mode	#4 AWG
CG(P)125-xxxxx	120 kA/mode	#4 AWG
CG(P)150-xxxxx	150 kA/mode	#4 AWG
CG(P)200-xxxxx	200 kA/mode	#4 AWG

Upstream overcurrent protection device (OCPD)

The CG3 and CGP3 series units can either be Type 1 or Type 2. Please refer to the SPD types chart to determine the SPD type for the unit.

SPD types

Country SPD is installed in	Polycarbonate enclosure		Metal and stainless steel enclosure	
	UL 1283	Not UL 1283	UL 1283	Not UL 1283
United States and all other countries	SPD Type 2	SPD Type 1	SPD Type 2	SPD Type 1
Canada	SPD Type 2	SPD Type 1	SPD Type 2	SPD Type 2

The CG3 or CGP3 series unit is a one-port SPD and is to be connected in parallel with the electrical system. It may be connected via a circuit breaker, molded case switch or fused switch (local and national electric codes take precedence). Type 1 SPDs may be connected directly to the bus; in this case, ABB recommends installing the SPD unit behind a disconnect switch or other disconnecting means for ease of serviceability.

If the unit is Type 2, the following OCPD is recommended:

Si l'unité est de type 2, il est recommandé d'utiliser le dispositif suivant de protection contre les surintensités:

kA	United States and all other countries États-Unis et tous les autres pays	Canada
40	30 A max.	30 A max.
60–100	100 A max.	50 A max.
125–200	200 A max.	90 A max.

Wiring color installation guide

Voltage (V)	A, L1	B, L	C, L2	Neutral	Ground
120 One pole	–	Black	–	White	Green/yellow
127 One pole	–	Black	–	White	Green/yellow
220 One pole	–	Brown	–	Blue	Green/yellow
230 One pole	–	Brown	–	Blue	Green/yellow
240 One pole	–	Black	–	White	Green/yellow
277 One pole	–	Black	–	White	Green/yellow
347 One pole	–	Black	–	White	Green/yellow
240/120 Split phase	Black	–	Red	White	Green/yellow
480/240 Split phase	Brown	–	Orange	White	Green/yellow
208Y/120 Wye	Black	Red	Blue	White	Green/yellow
380Y/220 Wye	Black	Brown	Gray	Blue	Green/yellow
400Y/230 Wye	Black	Brown	Gray	Blue	Green/yellow
415Y/240 Wye	Brown	Orange	Yellow	White	Green/yellow
480Y/277 Wye	Brown	Orange	Yellow	White	Green/yellow
600Y/347 Wye	Black (A)	Black (B)	Black (C)	White	Green/yellow
240Δ /120 High-leg Delta	Black	Orange (HL)	Blue	White	Green/yellow
208Δ	Black	Red	Blue	–	Green/yellow
240Δ	Black	Red	Blue	–	Green/yellow
380Δ, 400Δ	Black	Brown	Gray	–	Green/yellow
415Δ ,480Δ	Brown	Orange	Yellow	–	Green/yellow
600Δ	Black (A)	Black (B)	Black (C)	–	Green/yellow
230 (for TNC grounding systems)	–	Brown	–	Blue	Green/yellow
230 (for TNS grounding systems)	–	Brown	–	Blue	Green/yellow
230 (for IT grounding systems)	–	Brown	–	Blue	Green/yellow
230 (for TT grounding systems)	–	Brown	–	Blue	Green/yellow

Mounting

Mount the SPD to the building structure using construction methods and hardware appropriate for your site.

Mount the SPD into or onto the wall. The electrician can mount to the back wall, if the back wall is made of structural material such as masonry or plywood. (Drywall is not a structural material). If back wall is not made of structural material, the electrician can create brackets to hold the SPD to the adjacent studs.

For direct sunlight applications, ABB suggests shading the monitoring components.

NEMA 4 enclosures are suitable for indoor or outdoor use. NEMA 4X (polymeric and stainless steel) enclosures are suitable for corrosive environments as well. All conduits and fittings must be rated and properly installed so that the final installation maintains the NEMA rating.

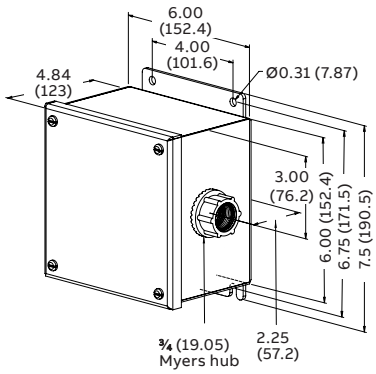

40 kA metal enclosure pre-wired

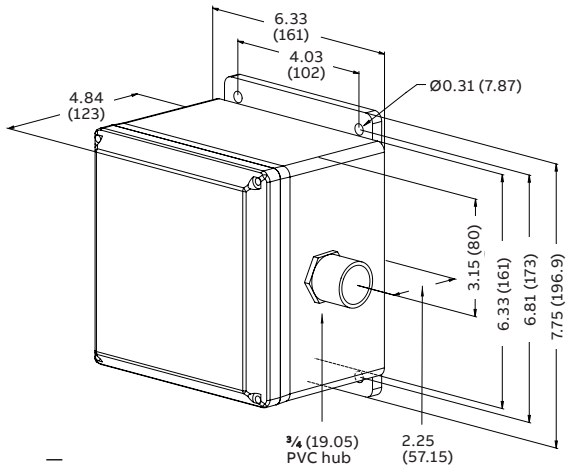

40 kA polycarbonate enclosure pre-wired

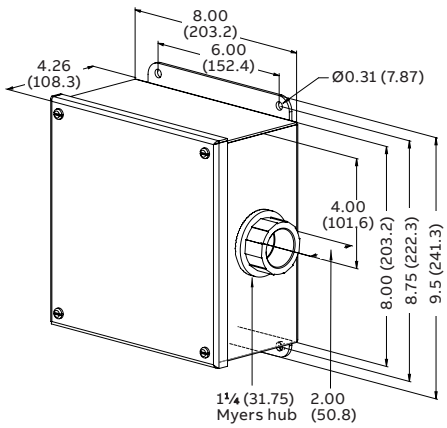

60–100 kA metal enclosure pre-wired

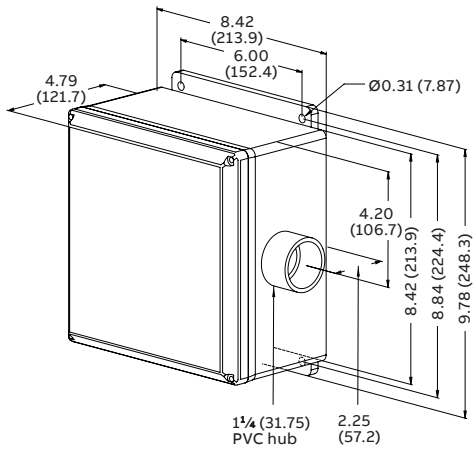

60–100 kA polycarbonate enclosure pre-wired

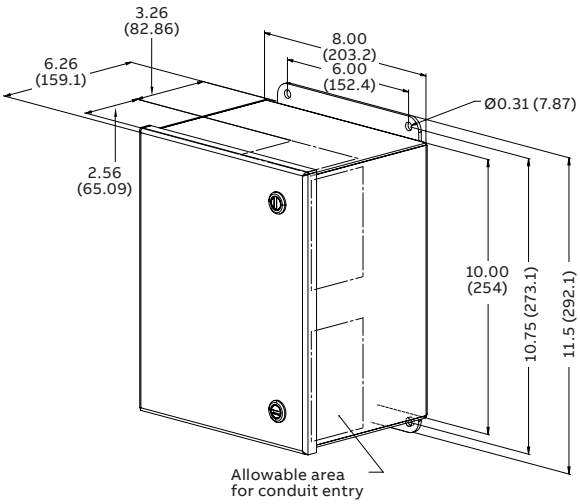

60–200 kA metal enclosure with termination lugs

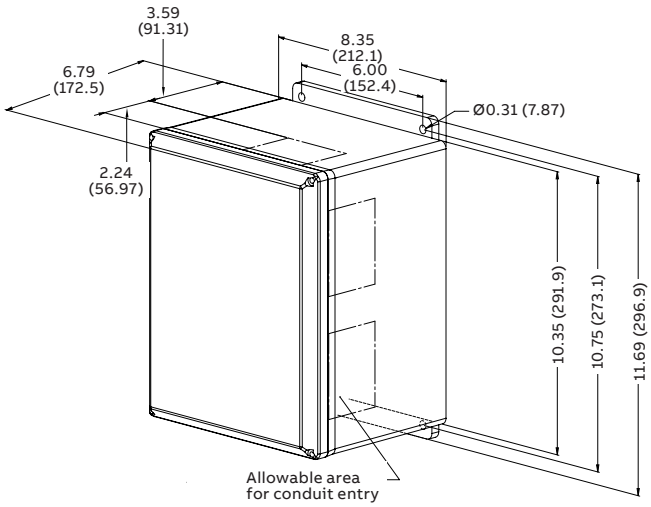

60–200 kA polycarbonate enclosure with termination lugs

kA	Enclosure type	Pre-wired	Weight in lbs	Weight in kg
40	Metal	Yes	7	3.18
40	Polycarbonate	Yes	5	2.17
60–100	Metal	Yes	13	5.9
60–100	Polycarbonate	Yes	9	4.08
125–200	Metal	No	16	7.26
125–200	Polycarbonate	No	10	4.54

All measurements in inches (millimeters) and pounds (kg) are approximate.

Mounting

Optional flush-mount plate can be purchased for flush-mount installation of the CG3 40 kA and CG(P)3 60–100 kA pre-wired units. It is assumed that the facing layer of wall board has not been installed yet.

First, the enclosure should be mounted to the rear wall or studs with the appropriate hardware. It should be positioned so that when the next steps are followed, the enclosure will project through the wall by the desired amount. Next, the wall board should be installed. The wall board should be installed over the SPD, so that the SPD projects through the wall board.

CAUTION

If the SPD has become energized, it must be de-energized now. Appropriate high voltage safety procedures should be followed here.

The lid of the enclosure must be unscrewed. It is generally not necessary to disconnect the monitor cables from the lid. It is permissible to allow the lid dangle on its ground lead, so long as the lid is gently lowered into place. The lid should be maneuvered through the rectangular hole in the wall board. The flush-mount plate (FMP) is placed over the SPD enclosure.

Mark the mounting hole locations through the 4 holes in the FMP. Remove the FMP. Drill holes at the marked locations. (These should be wide enough for the wall anchors to fit snugly.) Push the wall anchors into the holes. Tighten the screws that were in the wall anchors, until the wall anchors expand against the wall board. Remove and discard the 4 screws. (The anchors will remain in place.) Place the FMP over the SPD enclosure again. Fasten the FMP to the anchors with the (nicer looking) truss mount screws. Fasten the lid back onto the enclosure body. When fastening the lid, be careful that cables do not get pinched! **Now, power may be restored to the SPD.**

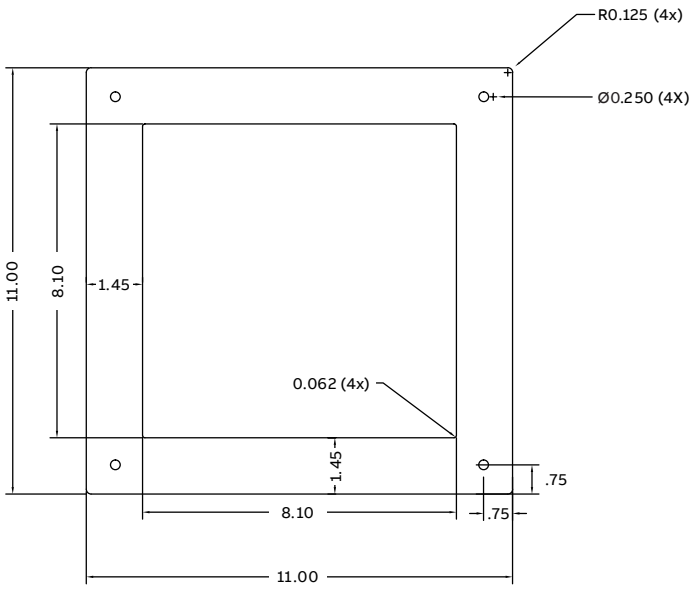

125–200 kA pre-wired units

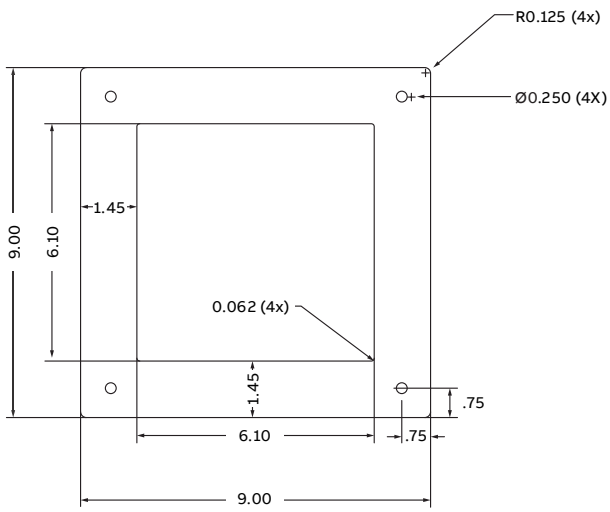

60–100 kA pre-wired units

All measurements in inches are approximate.

Electrical connections

⚠ CAUTION

Prior to installation, ensure the system configuration and voltage is equivalent to the SPD being installed.

Avant l'installation, assurez-vous que la configuration et la tension du système sont équivalentes à celles du SPD en cours d'installation.

*The 3-wire delta + ground SPDs series units do not have a neutral conductor.

*Les appareils triphasés en triangle + terre n'ont pas de conducteur neutre.

Terminated lugged units only: The box lugs should not be rotated from their factory positions. The box lugs should held steady with a wrench while the set screws are being turned.

Connecting form C dry contacts
Units supplied with form C dry relay contacts provide the means for customer-supplied remote status indication that operates in tandem with the SPD's inherent LED status indication. These contacts are for connection to a user-provided remote alarm and monitoring circuit. The relay contacts are rated maximum 1 A/30 V DC, 6 A/125 V AC. The form C contacts come pre-wired with 914 mm (36 in.) of #20 AWG conductors.

Pre-wired units 40–100 kA come connected with dry relay contact (DRC) leads. When input power is present on all phases, black and white are open circuits, and red is a closed circuit. The contacts change state when the unit has encountered failure to one or more phases.

On terminated lugged units 60–200 kA, the dry relay connections are made directly to the relay terminals: If the unit has an audible alarm and the input power is present on all phases, the terminals "NO" black (normally open) and "COM" white (common) are an open circuit, and terminals "NC" red (normally closed) and "COM" are a closed circuit. The contacts change state when the unit has encountered failure to one or more phases.

The CGP3 contains a second set of contacts. If input power is present on all phases, terminals "NC" and "COM" are an open circuit and terminals "NO" and "COM" are a closed circuit. The contacts change state when the unit has encountered failure to one or more phases. This second set of contacts works in parallel to the first set of contacts. A separate set of DRC wires may be connected to this second set.

The installer must provide the appropriate raceway and wiring for the monitoring circuit, observing the restrictions and conduit openings illustrated in an earlier section of this manual.

Remote monitoring

Use butt splices within the panelboard to connect the form C leads to the user's monitoring circuits. Alternatively, install a junction box between the SPD and the panelboard to connect form C leads to user's monitoring circuits. If the form C contacts are not used, user has the option of either cutting off the leads or coiling up the leads (the bare ends should be insulated). Consult applicable local codes to ensure proper installation.

For these models, the form C contacts must be wired by the installer.

See terminal block cover rear view diagram for the form C contact configuration and terminal location on the monitor board. The annotations on the diagram match the markings on the terminal block.

The installer must route the monitoring conductors to the terminal blocks on the main monitoring board. Tighten screws on terminals to 0.4 Nm (3.5 in-lb). This terminal block will accept wire sizes #28 AWG–#16 AWG. #20–#18 AWG is recommended.

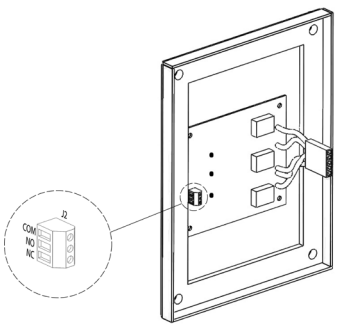

Terminal block cover rear view (CG3 models only)

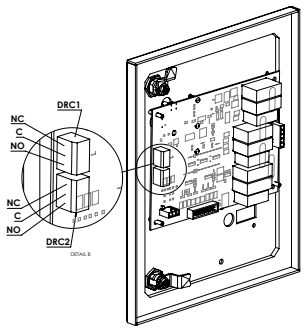

Terminal block cover rear view (CGP3 models only)

Verification and power up

WARNING

The cover of the SPD unit along with its associated cabling must be installed prior to applying power. The monitoring harness contains line voltage when power is applied to the unit.

Le couvercle du parafoudre et le câblage associé doivent être installés avant la mise sous tension. Le faisceau de surveillance contient la tension de ligne lors de la mise sous tension de l'unité.

Apply power to the SPD by closing the OCPD or switch feeding the suppressor.

Mettez sous tension le parafoudre en fermant le dispositif de protection contre les surintensités ou l'interrupteur qui alimente le parasurtenseur.

Upon energization of the SPD, if any of the LED(s) or alarms indicates an abnormal condition, power should promptly be disconnected from the SPD. The electrical system should be inspected and the pre-installation requirements should be validated. Do not attempt to leave power applied to the SPD, or re-energize the SPD in the event of an alarm condition. Please contact your local ABB representative for further assistance.

Lors de la mise sous tension du parafoudre, si l'une des LED ou des alarmes indique une anomalie, l'alimentation doit être rapidement déconnectée du parafoudre. Le système électrique doit être inspecté et les exigences préalables à l'installation doivent être validées. N'essayez pas de laisser le parafoudre sous tension ou de le remettre sous tension en cas d'alarme. Veuillez contacter votre représentant ABB local pour obtenir de l'aide.

NOTICE

Pressing the "Alarm ON/OFF" button when the alarm has not triggered will prevent the audible alarm from sounding during a failure.

En appuyant sur le bouton « Alarm ON/OFF » lorsque l'alarme ne s'est pas déclenchée, vous empêchez l'alarme sonore de retentir en cas de panne.

For CurrentGuard units (model number begins with CG3)

Standard monitoring package
Verify that the indicating LED(s) are illuminated. The indicating lights extinguish only upon failure of one or more phases (indicating an alarm condition).

Advanced monitoring package
Verify that all "phase protection status" indicating lights are illuminated. The "service required" indicating light illuminates only upon failure of one or more phases. Audible alarm should not operate under normal conditions. The audible alarm can be "muted" by pressing the "alarm ON/OFF" button, which subsequently will illuminate the "alarm silenced" light. Pressing the "alarm ON/OFF" button again will enable the alarm.

Verify proper operation

For CurrentGuard Plus units (model number begins with CGP3)
Verify that only the green indicating LED(s) are illuminated and that no red LED(s) are illuminated. Green LED(s) indicate a normal condition for each phase. Orange LED(s) indicate protection of 40–75% and red LED(s) indicate protection of <40%. Three-phase units have three (3) green indicating LEDs labeled “A”, “B” and “C.” Split-phase units should only have LEDs “A” and “C” illuminated. See Table 4 for LED status indication.

The CGP3 unit is equipped with a dual set of form C contacts. The relay containing the contacts is in the “alarm condition” or normally closed when the power is off to the unit, when the unit is encountering loss of power to one or more phases or if the CGP3 is encountering more than 40% loss of capacity due to internal fuse operation. Test the operation of the form C contacts by de-energizing the SPD and checking the state of the contacts with a continuity tester or observing the effect of the contacts on the user-provided remote alarm circuits.

The CGP3 unit also includes an audible alarm that should not operate under normal conditions. To silence the audible alarm, press the alarm on/off button on display.

The number of surges detected by the SPD is displayed on an eight-digit LCD display on the front of the CurrentGuard Plus door. The LCD counter is battery backed to maintain the number of surges even during a power loss. Press the “reset counter” button on the lid to reset the surge count.

LED and display alarm status conditions

Condition	Corresponding phase LED	Alarm condition	Priority*
Phase loss	LED Off	Y	1
% Protection < 40%	LED on red	Y	2
Filter/cap loss	LED blinks red once every 2 seconds	Y	3
% Protection 40 to 75%	LED on orange	N	4

Notes:
* 1 Highest priority takes precedence: I.e. if phase is lost, LED is off, no blinking even if filter loss. Alarm condition means the audible alarm is on, dry relay contacts are off (de-energized) and system alarm LED is on.

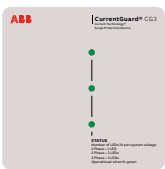

CG3 40 kA enclosure with standard monitoring

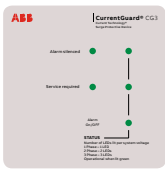

CG3 40 kA enclosure with advanced monitoring

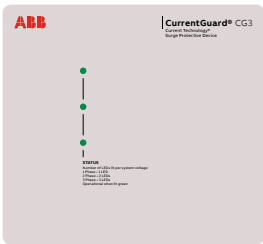

CG3 60–200 kA enclosure with standard monitoring

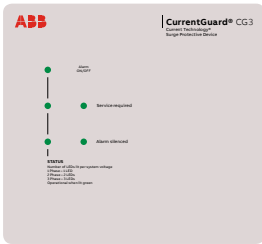

CG3 60–200 kA enclosure with advanced monitoring

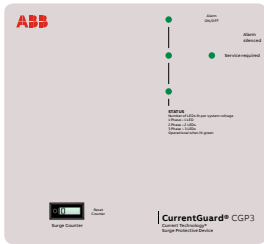

CGP3 60–200 kA units only

Serviceability

ABB does not provide a specific schedule for preventative maintenance as conditions will vary based on location and the environmental factors presented at each installation site. However, periodic inspections should be scheduled to verify that the SPD does not indicate a failure mode.

The unit's construction is designed to provide many years of uninterrupted service.

The unit contains no serviceable parts.

L'unité ne contient aucune pièce réparable.

NOTICE

In the event of an SPD alarm condition, do not attempt to disassemble the SPD to replace fusing or other components. The SPD contains thermally protected MOVs that will only open when the SPD has failed in a non-serviceable condition. The entire SPD must be replaced. Verify that the input power feeding the OVRHTP series unit is energized using a voltage tester.

En cas de condition d'alarme du SPD, n'essayez pas de démonter le SPD pour remplacer les fusibles ou d'autres composants. Le SPD contient des MOV protégés thermiquement qui ne s'ouvrent que lorsque le SPD tombe en panne et ne fonctionne plus. L'ensemble du SPD doit être remplacé. Vérifiez que la puissance d'entrée qui alimente le SPD est sous tension à l'aide d'un testeur de tension.

Troubleshooting

LED indication

Please contact ABB Technical Support if one of the following three conditions occur:

1. One or more phase protection status indicating lights are off.
2. System alarm indicating light is on.
3. Form C alarm contacts have changed state.

Standards and listings

The following standards and listings apply to the CurrentGuard and CurrentGuard Plus SPD product lines:

- UL Listed 1449 5th Edition for Type 1 and Type 2 SPD applications, cUL and UL 1283

The following standards and listings also apply (not verified by UL):

- Type 1 SPDs meet requirements for UL 96A
- Compliant to IEEE C62.41.1-2002, C62.41.2-2002 and C62.45-2002
- NFPA 70 [NEC], Article 242, Part II
- RoHS compliant

Warranty

ABB warrants that Equipment (excluding Software) shall be delivered free of defects in material and workmanship. The Warranty Remedy Period for Equipment (excluding Software) shall end ten (10) years after the original date of purchase for CG3 SPDs and fifteen (15) years after the original date of purchase for CGP3 SPDs. If a nonconformity to the foregoing warranty is discovered in the Equipment during the applicable Warranty Remedy Period, as specified above, under normal and proper use and provided the Equipment has been properly stored, installed, operated and maintained and written notice of such nonconformity is provided to ABB promptly after such discovery and within the applicable Warranty Remedy Period, ABB shall, at its option, either (i) repair or replace the nonconforming portion of the Equipment or (ii) refund the portion of the price applicable to the nonconforming portion of Equipment. If any portion of the Equipment so repaired or replaced fails to conform to the foregoing warranty, and written notice of such nonconformity is provided to ABB promptly after discovery and within the original Warranty Remedy Period applicable to such Equipment or 30 days from completion of such repair, replacement or re-performance, whichever is later, ABB will repair or replace such nonconforming Equipment. The original Warranty Remedy Period shall not otherwise be extended. ABB shall not be responsible for providing temporary power, removal, installation, reimbursement for labor costs or working access to the nonconforming Equipment, including disassembly and reassembly of non-ABB supplied equipment, or for providing transportation to or from any repair facility, or for any other expenses incurred in connection with the repair or replacement, all of which shall be at Purchaser's risk and expense. ABB shall have no obligation hereunder with respect to any Equipment which (i) has been improperly repaired or altered; (ii) has been subjected to misuse, negligence or accident; (iii) has been used in a manner contrary to ABB's instructions; (iv) is comprised of materials provided by or a design specified by Purchaser; or (v) has failed as a result of ordinary wear and tear. Equipment supplied by ABB but manufactured by others is warranted only to the extent of the manufacturer’s warranty, and only the remedies, if any, provided by the manufacturer will be allowed. Software Warranty and Remedies. ABB warrants that, except as specified below, the Software will, when properly installed, execute in accordance with ABB's published specification. If a nonconformity to the foregoing warranty is discovered during the period ending one (1) year after the date of shipment and written notice of such nonconformity is provided to ABB promptly after such discovery and within that period, including a description of the nonconformity and complete information about the manner of its discovery, ABB shall correct the nonconformity by, at its option, either (i) modifying or making available to the Purchaser instructions for modifying the Software; or (ii) making available at ABB's facility necessary corrected or replacement programs. ABB shall have no obligation with respect to any nonconformities resulting from (i) unauthorized modification of the Software or (ii) Purchaser-supplied software or interfacing. ABB does not warrant that the functions contained in the software will operate in combinations which may be selected for use by the Purchaser, or that the software products are free from errors in the nature of what is commonly categorized by the computer industry as “bugs.”

THE FOREGOING WARRANTIES ARE EXCLUSIVE AND IN LIEU OF ALL OTHER WARRANTIES OF QUALITY AND PERFORMANCE, WHETHER WRITTEN, ORAL OR IMPLIED, AND ALL OTHER WARRANTIES INCLUDING ANY IMPLIED WARRANTIES OF MERCHANTABILITY OR FITNESS FOR A PARTICULAR PURPOSE OR USAGE OF TRADE ARE HEREBY DISCLAIMED. THE REMEDIES STATED HEREIN CONSTITUTE PURCHASER’S EXCLUSIVE REMEDIES AND ABB’S ENTIRE LIABILITY FOR ANY BREACH OF WARRANTY.

Notes

Notes

USA
ABB Inc.
5900 Eastport Blvd.
Richmond, VA 23231-4453
(888) 385-1221

We reserve the right to make technical changes or modify the contents of this document without prior notice. With regard to purchase orders, the agreed particulars shall prevail. ABB Inc. does not accept any responsibility whatsoever for potential errors or possible lack of information in this document.

We reserve all rights in this document and in the subject matter and illustrations contained therein. Any reproduction or utilization of its contents – in whole or in parts – is forbidden without prior written consent of ABB Inc. Copyright© 2023 ABB. All rights reserved.

electrification.us.abb.com/products/surge-protective-devices

750-0098-007 C-02.2023