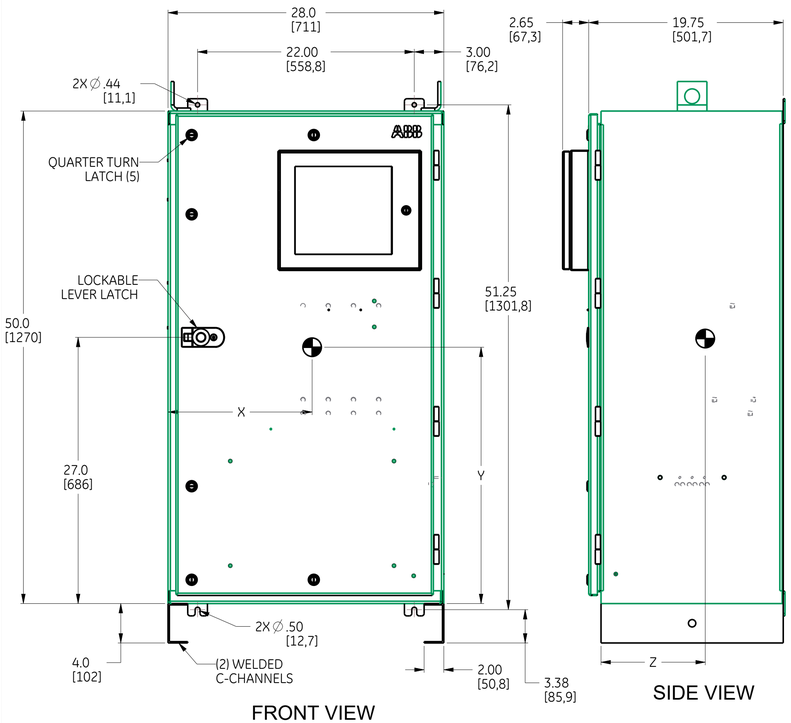
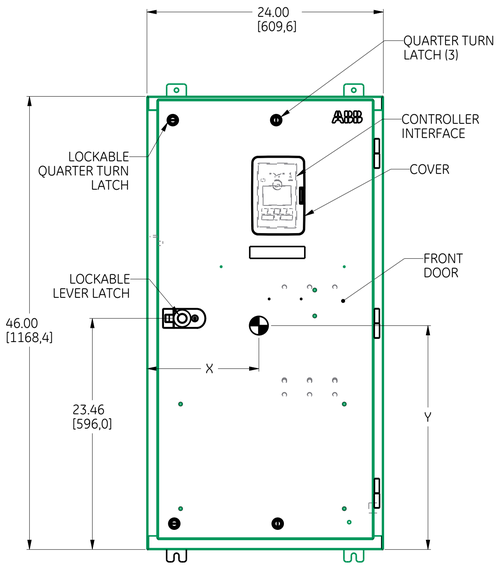
3D Model is the Master Document of Record
Article or Material Must Conform to REACH Procedure 3.9000000 Sec 14
Article or Material Must Conform to RoHS Procedure 3.9000000 Sec 13
Part Must Conform to 5.9800000 Sec 4 Toxicity Procedure
Geometrics Corresponding to Drawing as per ANSI Y14.5 -2009

4 POLE - 400A
NEMA 3R/4/12 SHOWN
SEE SHEET 4 FOR INSIDE DETAILS

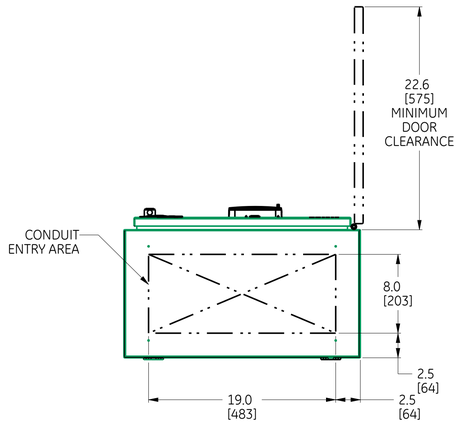


FRONT VIEW

SIDE VIEW



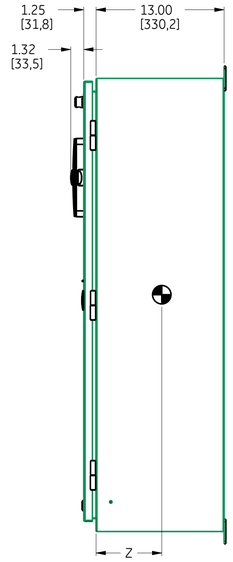
FRONT VIEW



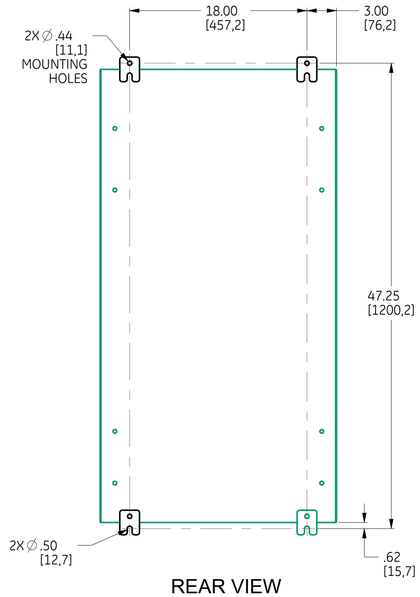
BOTTOM VIEW

NOTES
1. ENCLOSURE : NEMA 3R TYPE, WALL MOUNT.
2. MATERIAL:14 GA (.075) 1018 HRS REF.
3. FINISH : ANSI 61 GREY

2, 3 & 4 POLE - 260A
2 & 3 POLE - 400A
NEMA 3R SHOWN
SEE SHEET 2 FOR INSIDE DETAILS



SIDE VIEW



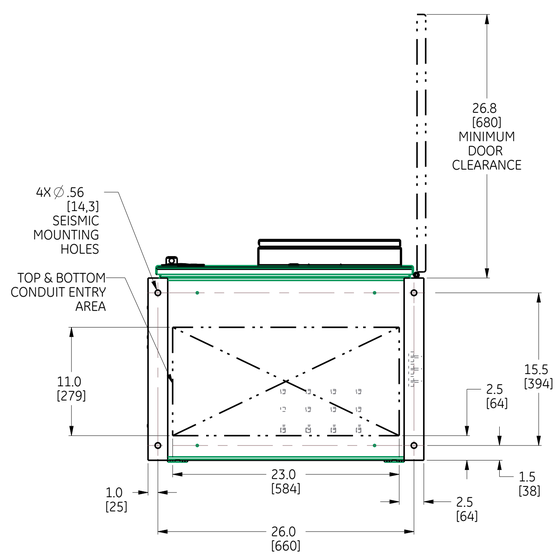
REAR VIEW

AMP	POLE	CONTROLLER TYPE	CABINET #	LUG RANGE	WEIGHT LB(KG)	CENTER OF GRAVITY IN(MM) X	Y	Z
260A	2	SEE TABLE A	F-2013MP	QTY 1 350 KCMIL	145(66)	11.5 (292)	23.0 (584)	7.5 (190)
	3				150(68)			
	4				155(70)			
400A	2		F-2013MP	QTY 2 250 KCMIL-1/0 OR QTY 1 600 KCMIL-#4	153(69)			
	3				159(72)			
	4		F-2015MP		290(131)	13.7(348)	28.1(714)	9.7(246)

TABLE A - HMI			
TYPE	TRANSITION	LEVEL	PART NO.
ZTX	OPEN	2	OXAMI1-L2
ZTG	OPEN	3	OXAMI1-L3
ZTGD	DELAYED	3	OXBMI1-L3

SEISMIC NOTES:

1.BOLT ENCLOSURES USING THE FOLLOWING SEISMIC CERTIFIED MOUNTING HARDWARE PER MOUNTING HOLE:
(HARDWARE PROVIDED BY INSTALLER).
*1/2-13 GRADE 5 BOLT TORQUE TO 70 FT-LBS. (95 NEWTON METERS).
*1/2-13 STANDARD FLAT WASHER.
*1/2 (13) HELICAL SPRING LOCK WASHER.
2. CENTER OF GRAVITY DIMENSIONS ARE FOR REFERENCE ONLY.
3. FOR WORKING CLEARANCE REFER TO NATIONAL AND LOCAL CODES AND STANDARDS.



BOTTOM VIEW

NOTES
1. ENCLOSURE : NEMA 3R TYPE, FREE STANDING, FLOOR MOUNT.
2. MATERIAL:12 GA (.105) 1018 HRS REF.
3. FINISH : ANSI 61 GREY

GENERAL NOTES:

1. CONSTRUCTION PER UL 1008 STANDARD.
2. FRONT ACCESSIBLE UNIT. NO SIDE OR REAR ACCESS REQUIRED.
3. SUITABLE WIRE BENDING SPACE PROVIDED PER THE SAFETY AGENCY STANDARDS.
4. UL AND CSA RECOGNIZED/CERTIFIED MECHANICAL LUGS ARE STANDARD.
5. EQUIPMENT GROUND LUG IS PROVIDED IN ALL UNITS. SEE SHEETS 2 AND 3 FOR DETAILS.
6. ALL DIMENSIONS ARE FOR REFERENCE ONLY AND SHOWN IN INCHES(MILLIMETERS).
7. 100% RATED SOLID/SWITCHED NEUTRAL PROVIDED PER THE SWITCH CONFIGURATION.
8. SUITABLE FOR TOP AND/OR BOTTOM CABLE ENTRY.

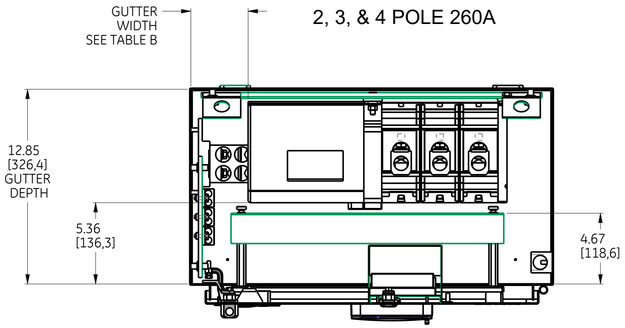
ABB PROPRIETARY AND CONFIDENTIAL INFORMATION
The information contained in the document has to be kept strictly confidential.
Any unauthorized use or disclosure of the information is strictly prohibited.
ABB reserves all rights regarding intellectual Property Rights.
Copyright 2018 ABB. All rights reserved

Third Angle Projection

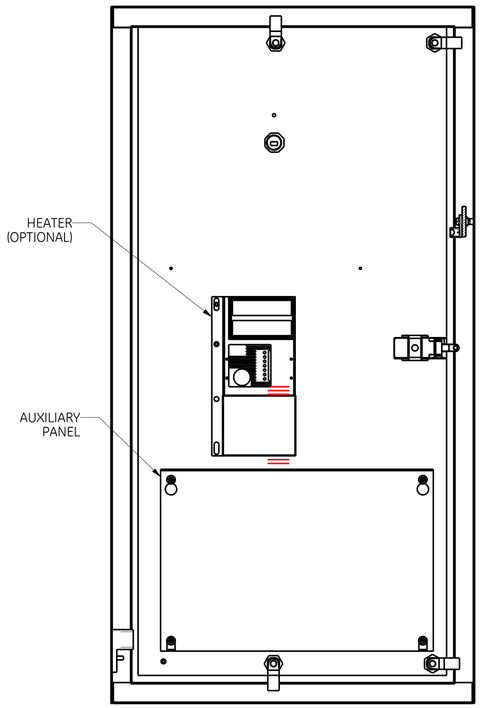
DRAWING FILE: 50C-1064	MODEL FILE: 50C-1064		
DATE MODIFIED: 27-Jan-21 07:06:35 PM	DESIGNED BY: AP		
Calculated for: VOLUME: 0.000 in^3	CN#: C100606	APPROVED BY: SR	TITLE: ZENITH-ZTX/ZTG, T-SERIES LAYOUT 260A-400A, WITH NEMA 3R, 4, 12 TYPE CABINET
	◇ Critical to Quality Characteristic		
MASS: 0.000 lbm	MATERIAL SPECIFICATION: ---	FINISH SPECIFICATION: ---	UNITS: in / LOCAL TITLE: ---
UNLESS OTHERWISE SPECIFIED	MATERIAL DESCRIPTION: ---		SIZE: D / ROOT NUMBER: 50C-1064 / REV: 2 / RELEASE STATE: In Work
TOLERANCE ON: 2 PL DECIMALS ± 0.1; 2 PL DECIMALS ± 0.02; 3 PL DECIMALS ± 0.005; ANGLES ± 1.0	FINISH DESCRIPTION: ---		SCALE: 11:100 / PRODUCT LINE: ZTX/ZTG(D) / SHEET: 1 of 4

us_3rd_d.frm

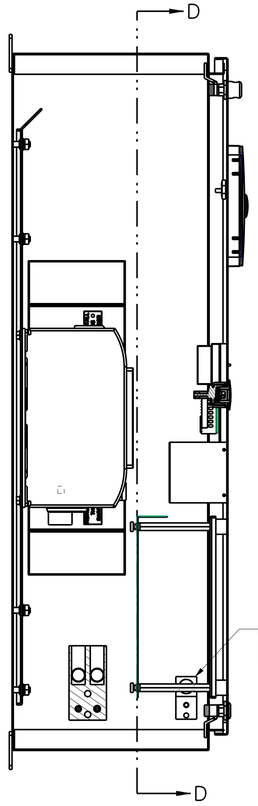
TABLE B - GUTTER WIDTH		
RATING	POLES	
260A	4	3.4 (86)
	3	3.8(94)



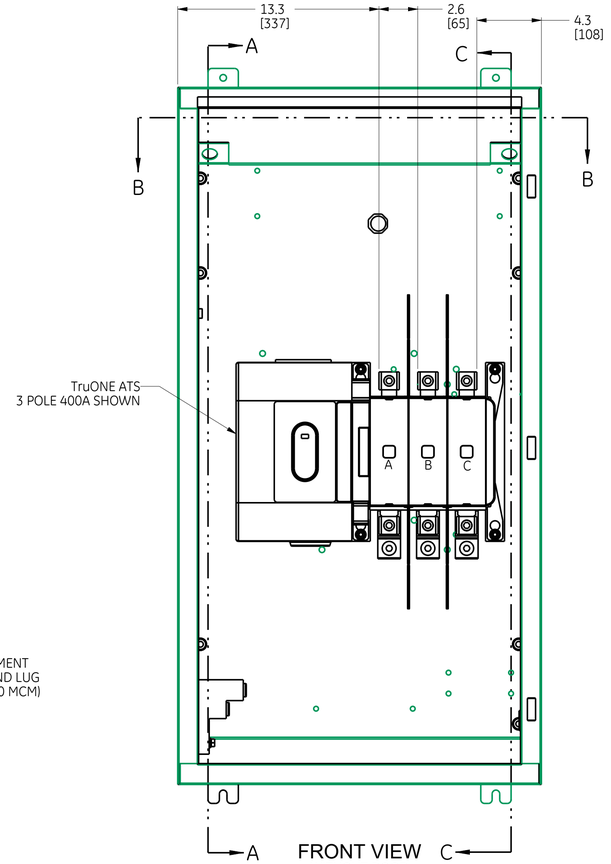
SECTION B-B
TOP VIEW
WITHOUT TOP PANEL



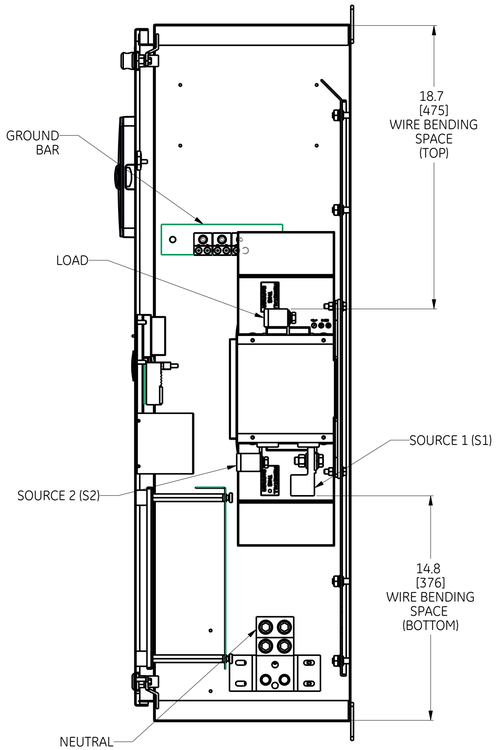
SECTION D-D
DOOR INSIDE VIEW



SECTION A-A
LEFT VIEW
WITHOUT SIDE PANEL



FRONT VIEW
WITHOUT DOOR



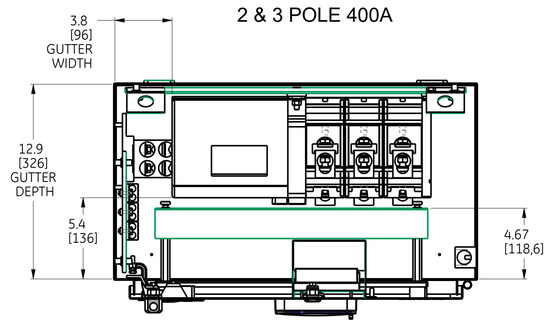
SECTION C-C
RIGHT SIDE VIEW
WITHOUT SIDE PANEL

NOTE:
1. REFER TO SHEET (1) FOR COMPLETE NOTE DETAILS
2. MECHANICAL LUGS SHOWN IN ABOVE VIEWS ARE FOR REFERENCE ONLY.

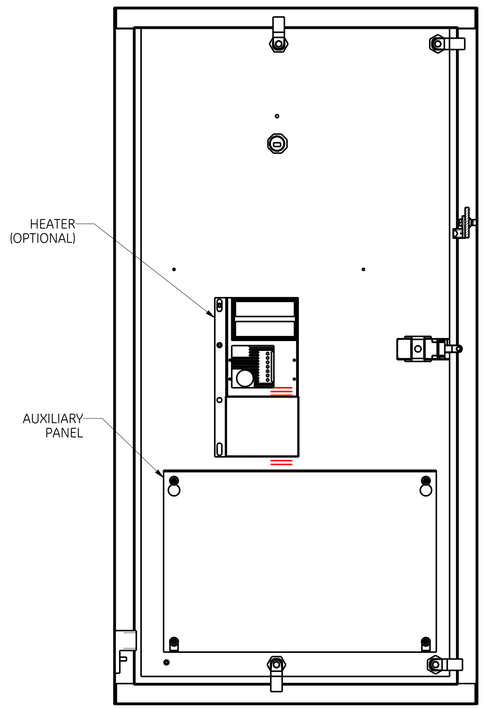
ABB PROPRIETARY AND CONFIDENTIAL INFORMATION
The information contained in the document has to be kept strictly confidential.
Any unauthorized use, duplication, modification, distribution or disclosure of this material is strictly forbidden.
ABB reserves all rights regarding intellectual Property Rights.
Copyright 2018 ABB. All rights reserved.

Third Angle Projection

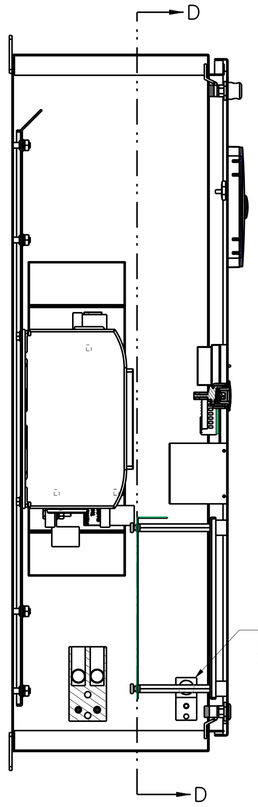
ABB		
SIZE D	NUMBER 50C-1064	REV 2
SCALE 11:100	PRODUCT LINE ZTX/ZTG(D)	SHEET 2 of 4



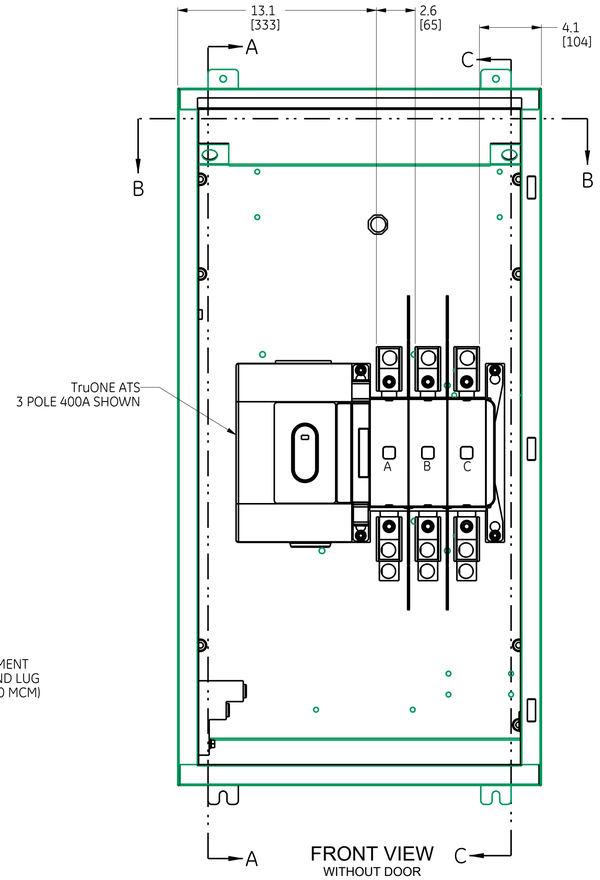
SECTION B-B
TOP VIEW
WITHOUT TOP PANEL



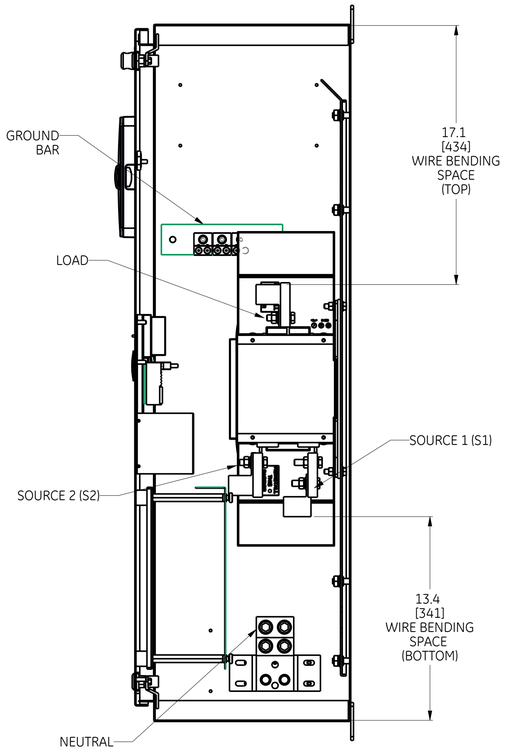
SECTION D-D
DOOR INSIDE VIEW



SECTION A-A
LEFT VIEW
WITHOUT SIDE PANEL



FRONT VIEW
WITHOUT DOOR



SECTION C-C
RIGHT SIDE VIEW
WITHOUT SIDE PANEL

NOTE:
1. REFER TO SHEET (1) FOR COMPLETE NOTE DETAILS
2. MECHANICAL LUGS SHOWN IN ABOVE VIEWS ARE FOR REFERENCE ONLY.

ABB PROPRIETARY AND CONFIDENTIAL INFORMATION
The information contained in the document has to be kept strictly confidential.
Any unauthorized use, copy, publication or disclosure to a third party is strictly forbidden.
ABB reserves all rights regarding Intellectual Property Rights.
Copyright 2018 ABB. All rights reserved.

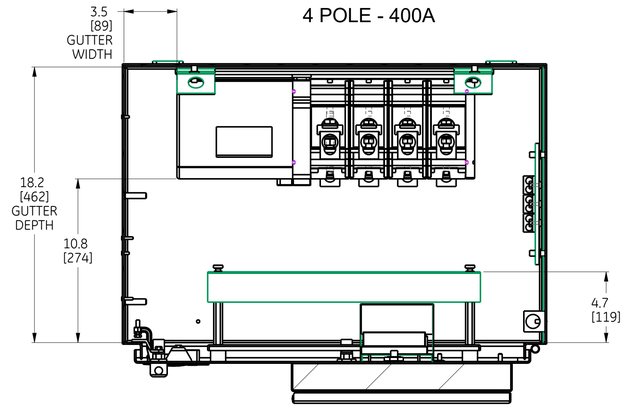
Third Angle Projection

ABB		
SIZE D	NUMBER 50C-1064	REV 2
SCALE 11:100	PRODUCT LINE ZTX/ZTG(D)	SHEET 3 of 4

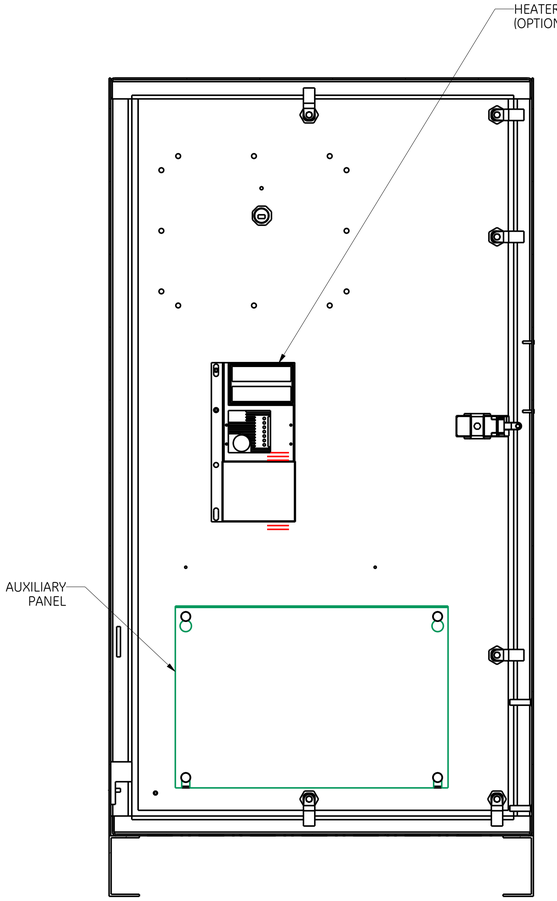
ABB PROPRIETARY AND CONFIDENTIAL INFORMATION
The information contained in this document has to be kept strictly confidential.
Any unauthorized use, duplication, modification, distribution or disclosure is strictly forbidden.
ABB reserves all rights regarding intellectual Property Rights.
Copyright 2018 ABB. All rights reserved

Third Angle Projection

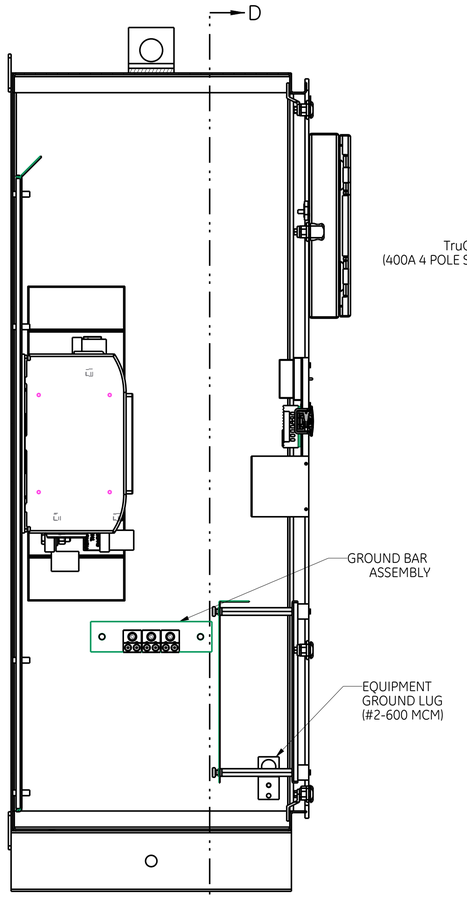
4 POLE - 400A



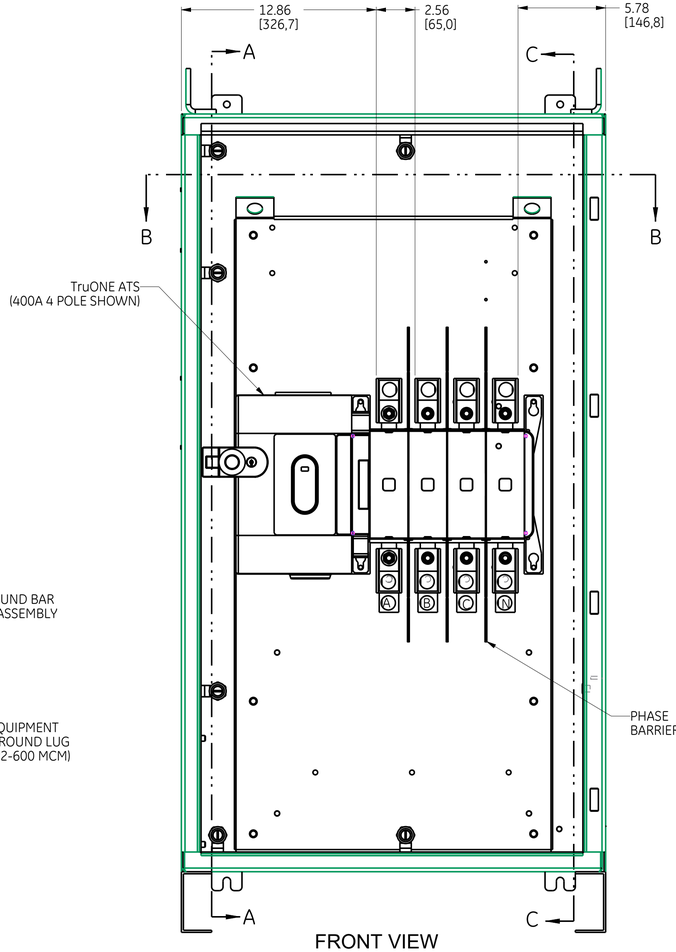
SECTION B-B
TOP VIEW
WITHOUT TOP PANEL



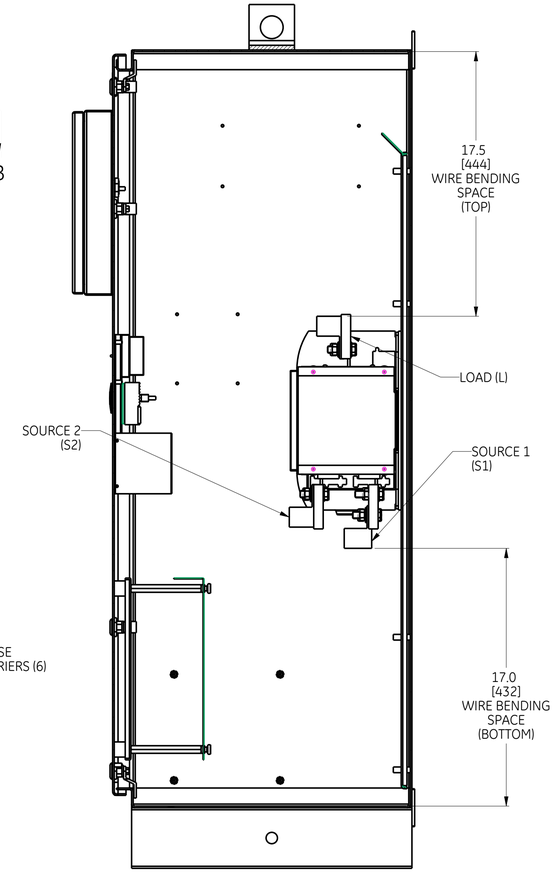
SECTION D-D
DOOR INSIDE VIEW



SECTION A-A → D
LEFT SIDE
WITHOUT SIDE PANEL



FRONT VIEW
WITHOUT DOOR



SECTION C-C
RIGHT SIDE VIEW
WITHOUT SIDE PANEL
AND PHASE BARRIERS

NOTE:
1. REFER TO SHEET (1) FOR COMPLETE NOTE DETAILS
2. MECHANICAL LUGS SHOWN IN ABOVE VIEWS ARE FOR REFERENCE ONLY.

SIZE D	NUMBER 50C-1064	REV 2
SCALE 9:100	PRODUCT LINE ZTX/ZTG(D)	SHEET 4 of 4