DRIVES FOR HVAC

ACH580-01 drives, NEC types

Quick installation and start-up guide

This guide is applicable to the North American product types. There is a separate guide for the global (IEC) product types.

Documentation in other languages	Ecodesign information (EU 2019/1781 and SI 2021 No. 745)	About this document
		3AXD50000788286 Rev D EN 2023-08-25 © 2023 ABB. All rights reserved. Original instructions. 3AXD50000788286D

Safety instructions

WARNING! Obey these instructions. If you ignore them, injury or death, or damage to the equipment can occur. If you are not a qualified electrical professional, do not do electrical installation or maintenance work.

WARNING! Before you activate the automatic fault reset or automatic restart functions of the drive control program, make sure that no dangerous situations can occur. These functions reset the drive automatically and continue operation after a fault or supply break. If these functions are activated, the installation must be clearly marked as defined in IEC/EN/UL 61800-5-1, subclause 6.5.3, for example, "THIS MACHINE STARTS AUTOMATICALLY".

- Do not do work on the drive, motor cable, motor, or control cables when the drive is connected to the input power. Before you start the work, isolate the drive from all dangerous voltage sources and make sure that it is safe to start the work. Always wait for 5 minutes after disconnecting the input power to let the intermediate circuit capacitors discharge.
- Do not do work on the drive when a rotating permanent magnet motor is connected to it. A rotating permanent magnet motor energizes the drive, including its input and output terminals.
- Frames R1…R2, IP21 (UL Type 1): Do not lift the drive by holding it from the cover. The cover can come loose and cause the drive to fall.
- Frames R5…R9: Do not tilt the drive. The drive is heavy and has a high center of gravity. It can topple accidentally.
- Frames R5…R9: Lift the drive with a lifting device. Use the lifting eyes of the drive.

R1…R2

R5…R9

R5…R9

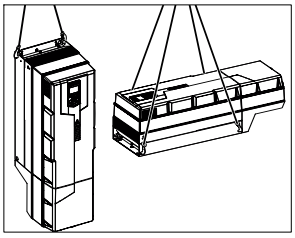

1. Unpack the drive

Keep the drive in its package until you are ready to install it. After unpacking, protect the drive from dust, debris and moisture. Make sure that these items are included:

- cable/conduit box (frames R1…R2 and R5…R9, IP21 [UL Type 1])
- drive
- mounting template
- control panel (factory-installed on the cover in some drive types)
- quick installation and start-up guide
- multilingual residual voltage warning stickers
- hardware and firmware manuals, if ordered
- options in separate packages, if ordered.

Make sure that there are no signs of damage to the items.

2. Reform the capacitors

If the drive has not been powered up for a year or more, you must reform the DC link capacitors. See Related documents or contact ABB technical support.

3. Select the cables and fuses

- Select the power cables. Obey the local regulations.
  - **Input power cable:** Use symmetrical shielded cable (VFD cable) for the best EMC performance. NEC installations: Conduit with continuous conductivity is also allowed and must be grounded on both ends.
  - **Motor cable:** ABB recommends symmetrically shielded VFD motor cable to reduce bearing current and wear and stress on motor insulation and to provide the best EMC performance. Although not recommended, conductors inside continuously conductive conduit are allowed in NEC installations. Ground conduit on both ends.
  - **Power cable types:** IEC installations: Use copper or aluminum cables (if permitted). Aluminum cables can only be used for input power cabling in 230 V drives with frame size R5…R8. NEC installations: Use only copper conductors.
  - **Current rating:** max. load current.
  - **Voltage rating (minimum):** 600 V AC cable is accepted for up to 500 V AC, 750 VAC cable is accepted for up to 600 V AC, 1000 V AC cable is accepted for up to 690 V AC.
  - **Temperature rating:** IEC installations: Select a cable rated for at least 70 °C maximum permissible temperature of conductor in continuous use. NEC installations: Use 75 °C conductors minimum. Insulation temperature can be higher as long as the ampacity is based on 75 °C conductors.
  - **Size:** Refer to Ratings, fuses and typical power cable sizes for the typical cable sizes and to Terminal data for the power cables for the maximum cable sizes.
- Select the control cables. Use double-shielded twisted-pair cable for analog signals. Use double-shielded or single-shielded cable for the digital, relay and I/O signals. Do not run 24 V and 115/230 V signals in the same cable.
- Protect the drive and input power cable with the correct fuses. Refer to Ratings, fuses and typical power cable sizes.

4. Examine the installation site

Examine the site where you will install the drive. Make sure that:

- The installation site is sufficiently ventilated or cooled to remove heat from the drive.
- The ambient conditions meet the requirements. Refer to Ambient conditions.
- The installation surface is as close to vertical as possible and strong enough to support the weight of the drive. Refer to Weights and free space requirements.
- The installation surface, floor and materials near the drive are not flammable.
- There is sufficient free space around the drive for cooling, maintenance and operation. For the minimum free space requirements, refer to Weights and free space requirements.
- There are no sources of strong magnetic fields such as high-current single-core conductors or contactor coils near the drive. A strong magnetic field can cause interference or inaccuracy in the operation of the drive.

5. Install the drive on the wall

Select fasteners that comply with local requirements applicable to wall surface materials, drive weight and application.

Prepare the installation site

1. Make marks with the help of the mounting template. Remove the mounting template before you install the drive on the wall.
2. Drill the holes and put anchors or plugs into the holes.
3. Install the screws. Leave a gap between the screw head and mounting surface.

R1…R4

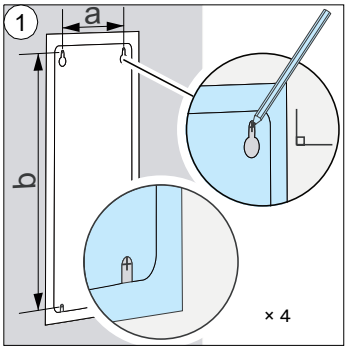

R5…R9

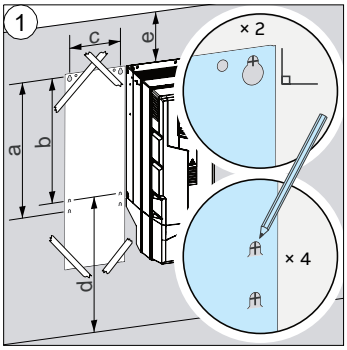

R1…R9

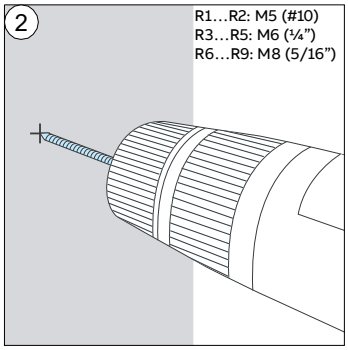

	R1		R2		R3		R4		R5		R6		R7		R8		R9	
	mm	in	mm	in	mm	in	mm	in	mm	in	mm	in	mm	in	mm	in	mm	in
a	98	3.86	98	3.86	160	6.30	160	6.30	612	24.09	571	22.5	623	24.5	701	27.6	718	28.3
b	317	12.48	417	16.42	473	18.62	619	24.37	581	22.87	531	20.9	583	23.0	658	25.9	658	25.9
c	-	-	-	-	-	-	-	-	160	6.30	213	8.4	245	9.7	263	10.3	345	13.6
d >	-	-	-	-	-	-	-	-	200	7.87	300	11.8	300	11.8	300	11.8	300	11.8
e >	-	-	-	-	-	-	-	-	100	3.94	155	6.1	155	6.1	155	6.1	200	7.9

R1…R4

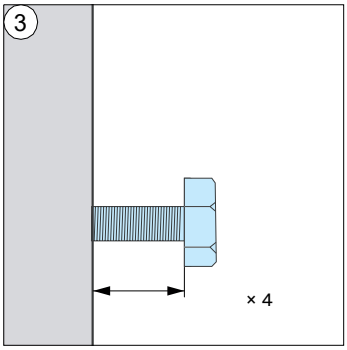

R5

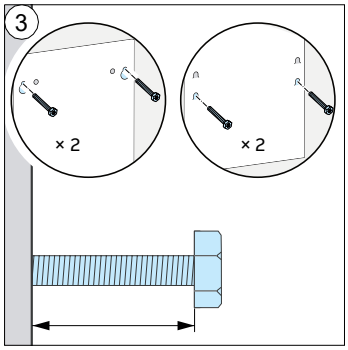

R6…R9

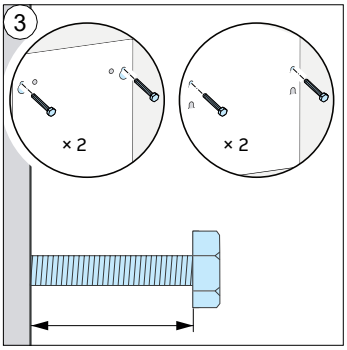

Frames R1…R4: Put the drive on the wall and tighten the screws

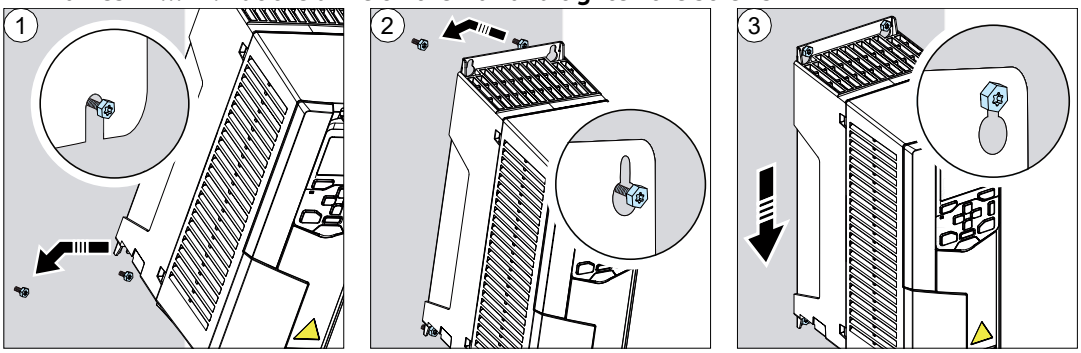

Frame R5, IP21 (UL Type 1): Install the cable box

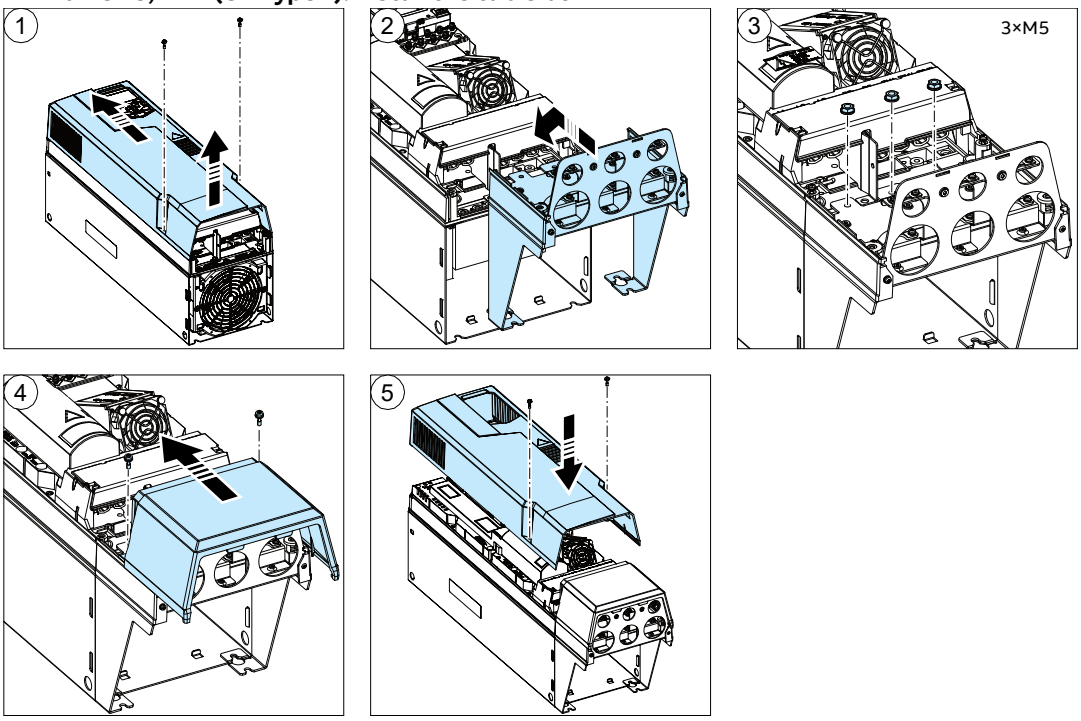

Frames R5…R9: Put the drive on the wall and tighten the screws

R5

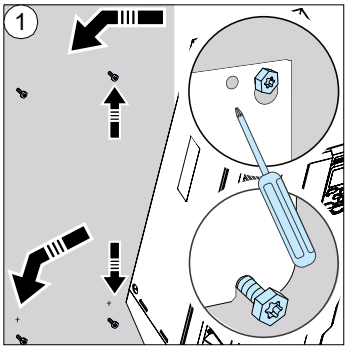

R5

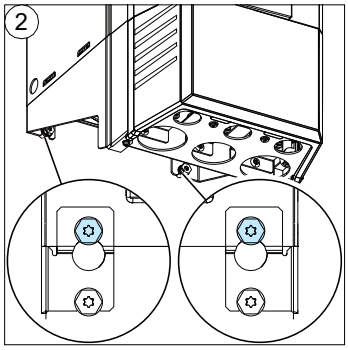

R6…R9

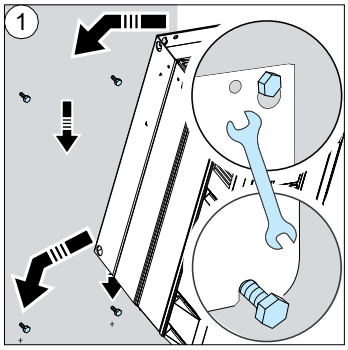

6. Remove the cover(s)

R1…R4, IP21 (UL Type 1)

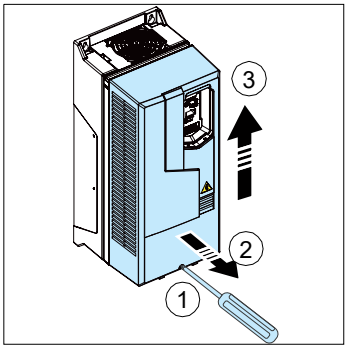

R5, IP21 (UL Type 1)

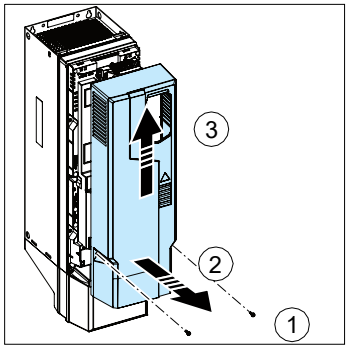

R5, IP21 (UL Type 1)

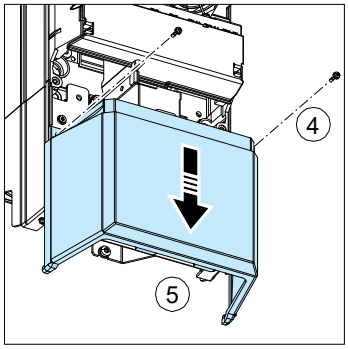

R6…R9, IP21 (UL Type 1)

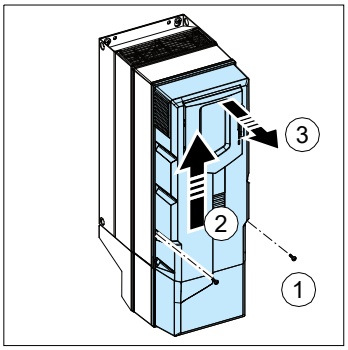

R1…R9, IP55 (UL Type 12)

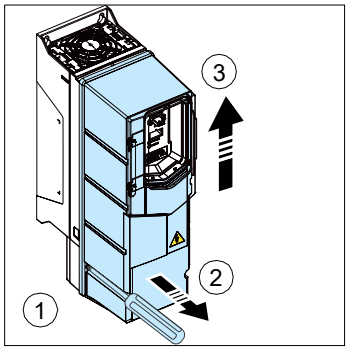

7. Frames R1…R2 and R6…R9, IP21 (UL Type 1): Install the cable/conduit box

R1…R2

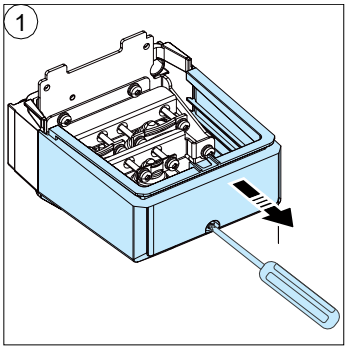

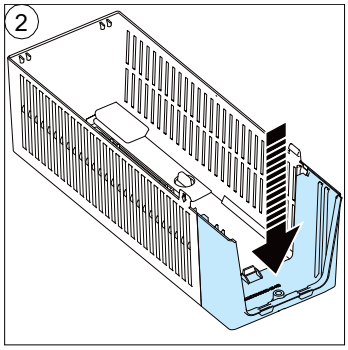

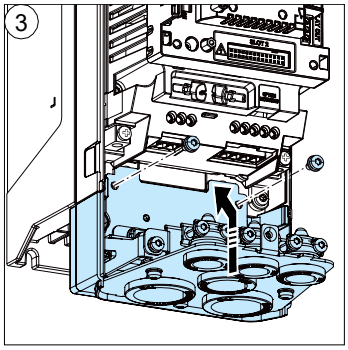

R6…R9

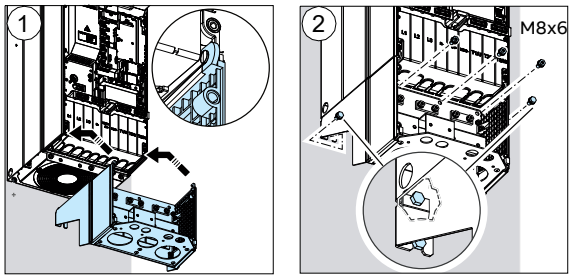

8. Attach a residual voltage warning sticker to the drive in the local language

Frames R1…R4: to the control panel mounting platform, Frames R5…R9: next to the control unit.

9. Make sure that the drive is compatible with the grounding system

You can connect all drives to a symmetrically grounded TN-S system (center-grounded wye) without any modifications to the built-in EMC filter or varistors. If you install the drive to a different system, reconfigure the EMC and VAR screws as shown in the table below. The table also shows the optional modifications available.

Frame size	Screw label	TN System Default screws	TN System[5]	Corner-grounded delta and Midpoint-grounded delta system	IT system	TT system
R1…R3 R4 v2	EMC (DC)	None or plastic	Optional metal screw[1]	None or plastic[2]	None or plastic[2]	None or plastic
	VAR	Metal	Do not disconnect the metal screw	None or plastic	Remove the metal screw	Remove the metal screw
R4…R9[3]	EMC (DC)[4]	None or plastic	Optional metal screw[1]	None or plastic[2]	None or plastic[2]	None or plastic
	EMC (AC)	None or plastic	Optional metal screw[1]	None or plastic[2]	None or plastic[2]	None or plastic
	VAR	Metal	Do not disconnect the metal screw	Do not disconnect the metal screw	Remove the metal screw	Metal

1) Install metal screw and connect the EMC filter for better noise filtering.

2) Metal screw must not be used.

3) Frames R4 and R5 are evaluated for use on corner-grounded delta networks or midpoint grounded delta systems by UL standards. Do not use frames R4 and R5 on IEC installations with corner grounded networks.

4) R7 has no EMC (DC) screw for 600 V.

5) IEC drives manufactured outside North America have these screws installed by default.

10. Measure the insulation resistance of the power cables and the motor

Measure the insulation resistance of the input cable before you connect it to the drive. Obey local regulations.

Measure the insulation resistance of the motor cable and motor when the cable is disconnected from the drive. Measure the insulation resistance between each phase conductor and the PE conductor. Use a measuring voltage of 1000 V DC. The insulation resistance of an ABB motor must be more than 100 Mohm (reference value at 25 °C or 77 °F). For the insulation resistance of other motors, see the manufacturer's instructions. Moisture inside the motor decreases the insulation resistance. If you think that there is moisture, dry the motor and do the measurement again.

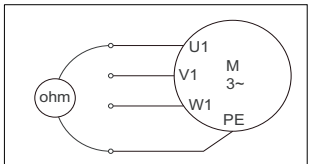

U1-PE, V1-PE, W1-PE

11. Connect the power cables

UL (NEC) connection diagram with symmetrically shielded cable or conduit

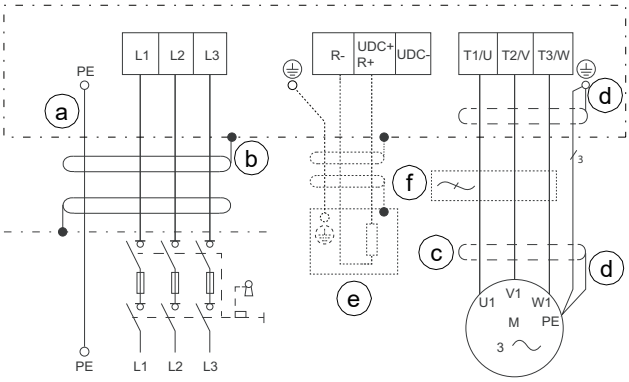

Note: UL (NEC) installation can include separate insulated conductors inside a conduit, shielded VFD cable in conduit, or shielded VFD cable without conduit. The normal dashed symbol (c) in this diagram represents the shield of shielded VFD cable. The same solid symbol (b) represents conduit.

a. Insulated ground conductor in a conduit: Ground to drive's PE terminal and to the distribution panel ground bus. For a VFD cable installation see d.
b. Conduit ground: Bond the conduit to the drive's conduit box and to the distribution panel enclosure. For a VFD cable installation see c.
c. Shield of a VFD shielded cable: Ground the shield 360° under drive's grounding clamp, then twist with the ground conductors and connect under the drive's ground terminal. Ground the shield also 360° at the motor end, then twist and connect under the motor's ground terminal. For a conduit installation see b.
d. Symmetrically constructed grounding conductors inside a VFD shielded cable: Twist together, combine with the shield and connect under the drive's ground terminal and under the motor's ground terminal. For a conduit installation see a.
e. External brake resistor connection (if used): For a conduit installation see a and b. For a VFD cable installation see c and d. In addition, cut the third phase conductor which is not needed for the brake resistor connection.
f. If necessary, install an external filter (du/dt, common mode, or sine filter). Filters are available from ABB.

Frames R1…R3 have a built-in brake chopper. If necessary, you can connect a brake resistor to terminals R- and UDC+/R+. The brake resistor is not included in the drive delivery.

In frames R4…R9, you can connect an external brake chopper to terminals UDC+ and UDC-. The brake chopper is not included in the drive delivery.

Note: All openings in the drive enclosure must be closed with UL listed devices having the same UL Type rating as the drive UL Type.

Connection procedure

1. Frames R1…R4: Go to step 2.

   Frames R5…R9: Remove the shroud(s) on the power cable terminals.
   Frames R6…R9: Remove the side plates (1a). Remove the shroud (1b), then make the necessary holes for the cables. In frames R8…R9, if you install parallel cables, also make the necessary holes in the lower shroud.

R5

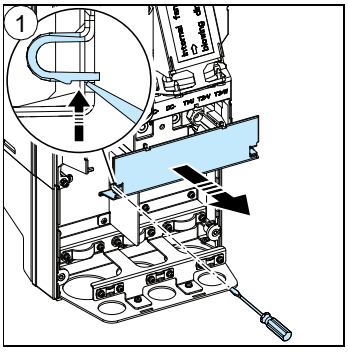

R6…R9

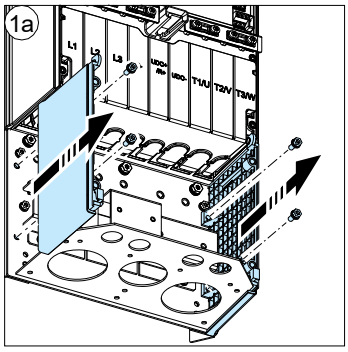

R6…R9

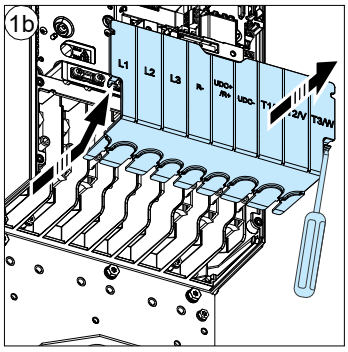

2. Prepare the power cables (shielded cable):

   Frames R1…R4: The drive is shipped with grommet cones pointing up. They must be removed and inserted back pointing down.
   - Remove the rubber grommets from the cable entry.
   - Cut a sufficient hole in the rubber grommet. Slide the grommet onto the cable (a).
   - Prepare the ends of the input power cable and motor cable as illustrated in the applicable figure (b). If you use aluminum cables, apply grease to the peeled cable before you connect it to the drive.
   - Slide the cables through the holes in the cable entry and attach the grommets to the holes.

Prepare the power cables (conduit):

- Remove the rubber grommets, if present, for the motor and input power cabling.
- Attach the cable conduits for the motor and input cabling to the cable entry holes in place of the removed grommets

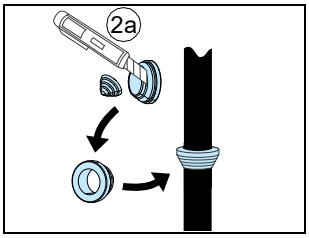

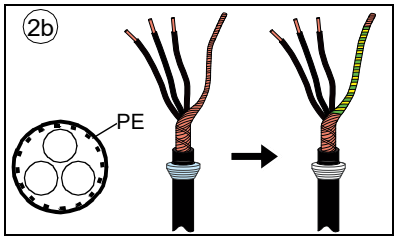

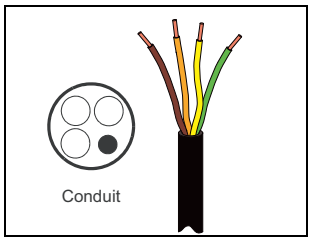

3. Connect the power cables. For the tightening torques, refer to Terminal data for the power cables.

- Slide the conductors through the conduit.
- Connect the conductors:
  - Connect the phase conductors of the motor cable to terminals T1/U, T2/V and T3/W. Connect the twisted shield of the cable to the grounding terminal. (3a)
  - Connect the grounding conductor to the grounding terminal. Connect the phase conductors of the input power cable as for the motor cabling. Use terminals L1, L2 and L3. (3b)
  - Frames R8…R9: If you do not use parallel phase conductors, ABB recommends that you put the conductors under the upper pressure plates. If you use parallel phase conductors, put the first conductor under the lower pressure plate and the second under the upper pressure plate.
  - If used, connect the brake resistor or brake chopper cables.
  - Frames R6…R9: After you connect the power cables, install the shroud on the terminals (3c).

R1…R4

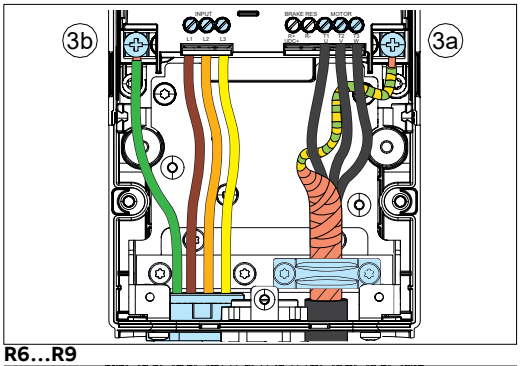

R5

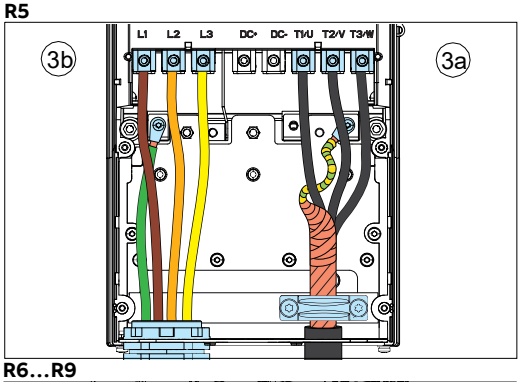

R6…R9

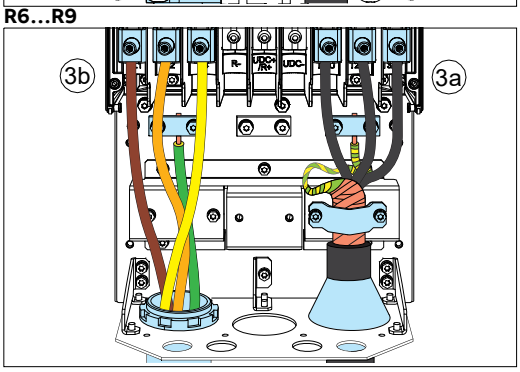

R6…R9

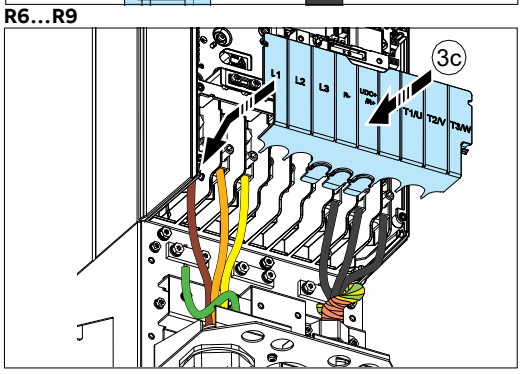

4. Frame R5: Install the cable box plate (4a) and shroud (4b).

R5

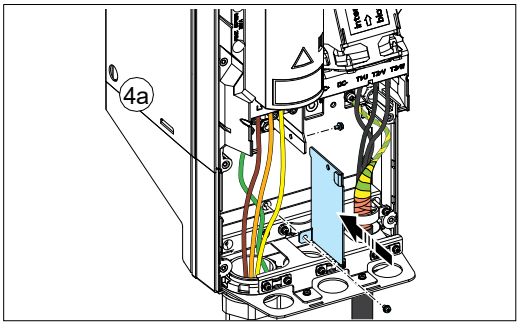

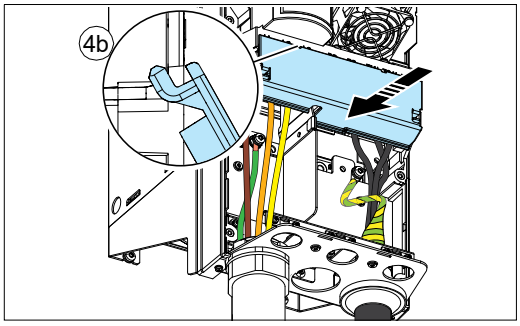

5. Secure the conduits outside the unit mechanically.

12. Connect the control cables

Make the connections according to the application. Keep the signal wire pairs twisted as near to the terminals as possible to prevent inductive coupling.

1. Remove the rubber grommets from the cable entry for the cables to be connected. Attach cable conduits to the empty cable entry holes. Slide the cables through the cable conduits.
2. Ground the shield at one end of the cable only. If you ground the shield at the source of the signal, do not ground it at the SCR terminal.
3. Tie all control cables to the provided cable tie mounts.

Default I/O connections (HVAC default configuration)

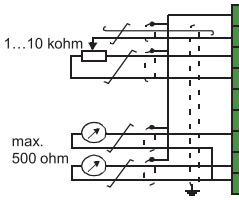

X1	Reference voltage and analog inputs and outputs	
1	SCR	Signal cable shield (screen)
2	AI1	**Output frequency/speed reference**: 0…10 V
3	AGND	Analog input circuit common
4	+10V	Reference voltage 10 V DC
5	AI2	**Actual feedback:** 0…10 V
6	AGND	Analog input circuit common
7	AO1	**Output frequency:** 0…10 V
8	AO2	**Output current:** 0…20 mA
9	AGND	Analog output circuit common
X2 & X3	Aux. voltage output and programmable digital inputs	
10	+24V	Aux. voltage output +24 V DC, max. 250 mA
11	DGND	Aux. voltage output common
12	DCOM	Digital input common for all
13	DI1	**Stop (0) / Start (1)**
14	DI2	Not configured
15	DI3	**Constant frequency/speed selection**
16	DI4	**Start interlock 1 (1 = allow start)**
17	DI5	Not configured
18	DI6	Not configured
X6, X7, X8	Relay outputs	
19	RO1C	**Damper control** 250 V AC / 30 V DC 2 A
20	RO1A	
21	RO1B	
22	RO2C	**Running** 250 V AC / 30 V DC 2 A
23	RO2A	
24	RO2B	
25	RO3C	**Fault (-1)** 250 V AC / 30 V DC 2 A
26	RO3A	
27	RO3B	
X5	Embedded fieldbus	
29	B+	Embedded fieldbus, EFB (EIA-485)
30	A-	
31	DGND	
S4	TERM	Termination switch
S5	BIAS	Bias resistors switch
X4	Safe torque off	
34	OUT1	Safe torque off (STO). Both circuits must be closed for the drive to start. The drawing shows the simplified connection of a safety circuit through safety contacts. If STO is not used, leave the factory-installed jumpers in place. See also section *Safe torque off (STO)*.
35	OUT2	
36	SGND	
37	IN1	
38	IN2	
X10	24 V AC/DC	
40	24 V AC/DC- in	R6… R9 only: Ext 24V AC/DC input to power up the control unit when the main supply is disconnected.
41	24 V AC/DC+ in	

Damper actuator

Run status

Fault status

Total load capacity of the auxiliary voltage output +24V (X2:10) is 6.0 W (250 mA / 24 V DC).

Terminals	Wire size	Tightening torque
+24V, DGND, DCOM, B+, A-, DGND, Ext. 24V	0.2 … 2.5 mm^2 (24 … 14 AWG)	0.5 … 0.6 N·m (5 lbf·in)
DI, AI, AO, AGND, RO, OUT, IN, SGND	0.14 … 1.5 mm^2 (26 … 16 AWG)	

Control cable installation examples

This section shows examples for routing the control cables in frames R4 and R6…R9. Frames R1…R3 and R5 are similar to frame R4.

R4

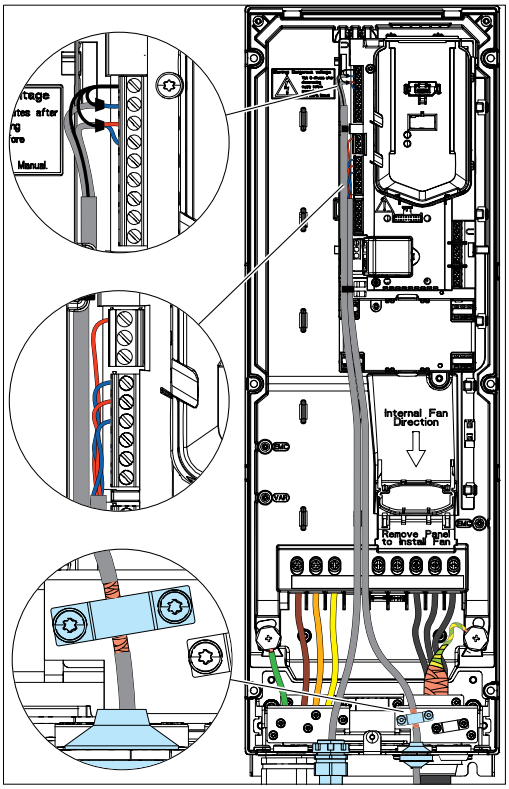

R6…R9

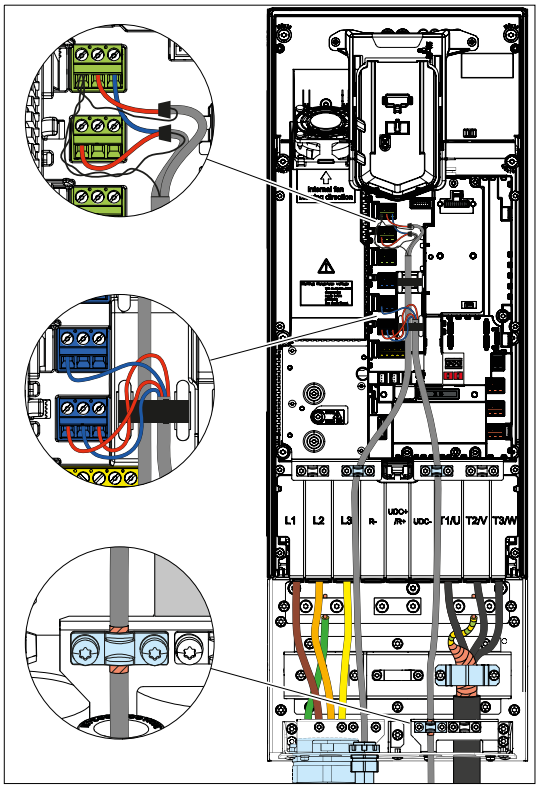

Embedded fieldbus connection

You can connect the drive to a serial communication link with a fieldbus adapter module or the embedded fieldbus interface. The embedded fieldbus interface supports BACnet.

To configure BACnet communication with the embedded fieldbus:

1. Connect the fieldbus cable and the required I/O signals. Use Belden 9842 or equivalent. Belden 9842 is a dual twisted, shielded pair cable with a wave impedance of 120 Ohms.
2. If the drive is at the end of the fieldbus, set the termination switch to ON.
3. Power up the drive and set the required parameters. Refer to Fieldbus communication.

A connection example is shown below.

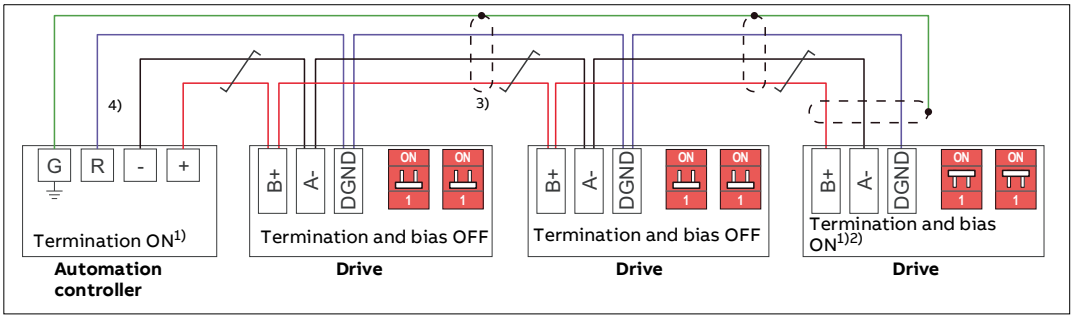

1) The devices at the ends of the fieldbus must have termination on. All other devices must have termination off.

2) One device must have bias on. It is recommended that this device is at the end of the fieldbus.

3) Attach the cable shields together at each drive, but do not connect them to the drive. Connect the shields only to the grounding terminal in the automation controller.

4) Connect the signal ground (DGND) conductor to the signal ground reference terminal in the automation controller. If the automation controller does not have a signal ground reference terminal, connect the signal ground to the cable shields through a 100 ohm resistor, preferably near the automation controller.

13. Install optional modules, if included in the delivery

14. Install the cover(s)

The cover installation procedure is the opposite of the removal procedure. Refer to Remove the cover(s). In frames R6...R9, install the side plates shown in Connection procedure before you install the cover.

15. Start up the drive

WARNING! Before you start up the drive, make sure that the installation is completed. Make sure also that it is safe to start the motor. Disconnect the motor from other machinery if there is a risk of damage or injury.

Use the control panel to do the start-up procedure. The two commands at the bottom of the display show the functions of the two softkeys and located below the display. The commands assigned to the softkeys are different depending on the context. Use the arrow keys, , and to move the cursor or change values depending on the active view. Key shows a context-sensitive help page.

1.	Power up the drive. Make sure that you have the motor name plate data available.	
2.	The First start assistant guides you through the first start-up. The assistant begins automatically. Wait until the control panel shows the language selection screen. Select the language you want to use and press **(OK).** **Note:** After you select the language, it takes a few minutes for the control panel to wake up.	English Deutsch Suomi Français Italiano Nederlands Svenska OK ▸
3.	Select **Commission the drive** and press **(Next)**.	Off ACH580 0.0 Hz **First start assistant** Set-up drive now? Spin the motor mode Commission the drive Exit & don't show at power-up Exit 15:16 **Next**
4.	Select the localization you want to use and press **(Next)**.	Off ACH580 0.0 Hz **Localization** Unit defaults: International (SI) US standard (Imperial) **Back** 15:16 **Next**
5.	To complete the first start assistant, select the values and settings when prompted by the assistant. Continue until the panel shows that the first start is complete. When the panel shows that the first start is complete, the drive is ready for use. Press **(Done)** to enter the Home view.	Off ACH580 0.0 Hz **First start complete** The drive is ready to run the motor. Press "Hand" to start the motor. To continue commissioning go to Menu > Primary settings. 15:19 **Done**

6.	The Home view shows the values of the selected signals.	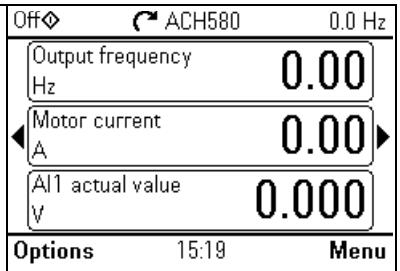
7.	After the additional adjustments, make sure that the actual I/O wiring matches the I/O use in the control program. In the **Main** menu, select **I/O** and press (**Select**).	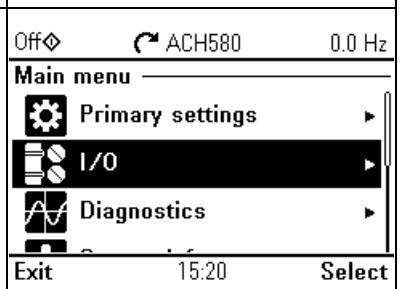
8.	After making the additional adjustments and checking the I/O connections, use the Diagnostics menu to make sure that the setup is functioning correctly. In the Main menu, select **Diagnostics** and press (**Select**) (or).	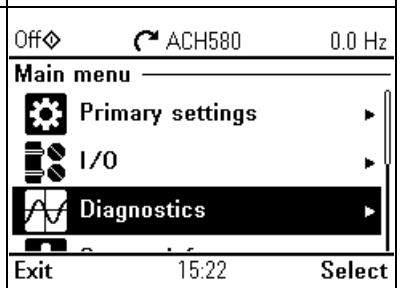

Motor overload protection

The motor thermal overload protection is set to motor current and motor class curves as default. Motor thermal overload protection can also be measured using motor temperature devices or can be estimated using a motor model defined by parameters. To enable protection using motor model parameters or measurement devices set parameter 35.11 and subsequent parameters through 35.55. To adjust motor class curves (default is class 20), change parameters 35.56 and 35.57.

Use the information key () on the drive control panel for more information on setting group 35 parameters. You must set the drive overload parameters correctly, or motor damage could occur.

Fieldbus communication

To configure the embedded fieldbus communication for BACnet MSTP, you must set at least these parameters:

Parameter	Setting	Description
20.01 Ext1 commands	Embedded fieldbus	Selects fieldbus as the source for the start and stop commands when EXT1 is selected as the active control location.
22.11 Ext1 speed ref1	EFB ref1	Selects a reference received through the embedded fieldbus interface as speed reference 1. Use this parameter with the vector motor control mode.
28.11 Ext1 frequency ref1	EFB ref1	Selects a reference received through the embedded fieldbus interface as frequency reference 1. Use this parameter with the frequency motor control mode.
58.01 Protocol enable	BACnet MSTP	Initializes embedded fieldbus communication.
58.03 Node address	1 (default)	Node address. There must be no two nodes with the same node address online.
58.04 Baud rate	19.2 kbps (default)	Defines the communication speed of the link. Use the same setting as in the master station.
58.05 Parity	8 EVEN 1 (default)	Selects the parity and stop bit setting. Use the same setting as in the master station.
58.06 Communication control	Refresh settings	Validates any changed EFB configuration settings. Use this after changing any parameters in group 58.

Other parameters related to the fieldbus configuration:

58.14 Communication loss action	
58.15 Communication loss mode	58.101 Data I/O 1 … 58.114 Data I/O 14
58.16 Communication loss time	

Warnings and faults

Warning	Fault	Aux. code	Description
A2A1	2281	Current calibration	Warning: Current calibration is done at the next start. Fault: Output phase current measurement fault.
A2B1	2310	Overcurrent	The output current is more than the internal limit. This can also be caused by an earth fault or phase loss.
A2B3	2330	Earth leakage	A load unbalance that is typically caused by an earth fault in the motor or the motor cable.
A2B4	2340	Short circuit	There is a short-circuit in the motor or the motor cable.
-	3130	Input phase loss	The intermediate DC circuit voltage oscillates due to missing input power line phase.
-	3181	Wiring or earth fault	Incorrect input and motor cable connection.
A3A1	3210	DC link overvoltage	Intermediate DC circuit voltage is too high.
A3A2	3220	DC link undervoltage	Intermediate DC circuit voltage is too low.
-	3381	Output phase loss	All three phases are not connected to the motor.
-	5090	STO hardware failure	STO hardware diagnostics has detected hardware failure. Contact ABB.
A5A0	5091	Safe torque off	The Safe torque off (STO) function is active.
A7CE	6681	EFB comm loss	Break in embedded fieldbus communication.
A7C1	7510	FBA A communication	Communication lost between drive (or PLC) and fieldbus adapter.
A7AB	-	Extension I/O configuration failure	The installed C-type module is not the same as configured, or there is an error in the communication between the drive and module.
AFF6	-	Identification run	The motor ID run occurs at the next start.
-	FA81	Safe torque off 1	The Safe torque off circuit 1 is broken.
-	FA82	Safe torque off 2	The Safe torque off circuit 2 is broken.

Ratings, fuses and typical power cable sizes

ACH580-01-…	Nominal ratings				Fuses[4]			Typical power cable sizes, Cu		Frame size
	Input current	Output current[1] light duty	Motor power[2]		gG fuse (IEC 60269)	uR/aR fuse[3][5] (DIN 43620)	UL class T[6][7][8]			
	I_1	I_{LD}	P_n	P_{LD}	ABB type	Bussmann type		mm² [9]	AWG [10]	
	A	A	kW	hp						
U_1 = 200…240 V, P_n at U_n = 3-phase 208/230 V, 60 Hz										
04A6-2	4.6	4.6	0.75	1.0	OFAF000H25	170M1563	JJS-15	3×1.5 + 1.5	14	R1
06A6-2	6.6	6.6	1.1	1.5	OFAF000H25	170M1563	JJS-15	3×1.5 + 1.5	14	R1
07A5-2	7.5	7.5	1.5	2.0	OFAF000H25	170M1563	JJS-15	3×1.5 + 1.5	14	R1
10A6-2	10.6	10.6	3.0	3.0	OFAF000H25	170M1563	JJS-15	3×1.5 + 1.5	14	R1
017A-2	16.7	16.7	4.0	5.0	OFAF000H25	170M1563	JJS-30	3×2.5 + 2.5	10	R1
024A-2	24.2	24.2	5.5	7.5	OFAF000H40	170M1565	JJS-40	3×4.0 + 4.0	8	R2
031A-2	30.8	30.8	7.5	10.0	OFAF000H40	170M1565	JJS-40	3×6.0 + 6.0	8	R2
046A-2	46.2	46.2	11.0	15.0	OFAF000H63	170M1566	JJS-80	3×10 + 10	6	R3
059A-2	59.4	59.4	15	20	OFAF000H63	170M1566	JJS-80	3×16 + 16	4	R3
075A-2	74.8	74.8	-	25	-	-	JJS-100	-	3	R4
075A-2	74.8	74.8	-	25	-	-	JJS-100	-	3	R4 v2
090A-2	90	90	22	30	OFAF00H125	170M1569	JJS-150	3×50 + 25	2	R4 v2
088A-2	88	88	22	30	OFAF00H125	170M3815	JJS-150	3×35 + 16	2	R5
114A-2	114	114	30	40	OFAF00H125	170M3815	JJS-150	3×50 + 25	1/0	R5
143A-2	143	143	37	50	OFAF0H200	170M3817	JJS-200	3×70 + 35	3/0	R6
169A-2	169	169	45	60	OFAF0H250	170M5809	JJS-250	3×95 + 50	4/0	R7
211A-2	211	211	55	75	OFAF1H315	170M5810	JJS-300	3×120 + 70	300 MCM	R7
273A-2	273	273	75	100	OFAF2H400	170M6810	JJS-400	2×(3×70 + 35)	2×2/0 MCM	R8
343A-2	343	343	-	125	-	-	JJS-500	-	2×250 MCM	R9
396A-2	396	396	-	150	-	-	JJS-600	-	2×300 MCM	R9
U_1 = 440…480 V, P_n at U_n = 3-phase 460 V, 60 Hz										
02A1-4	2.1	2.1	0.75	1.0	OFAF000H4	170M1561	JJS-15	3×1.5 + 1.5	14	R1
03A0-4	3.0	3.0	1.1	1.5	OFAF000H6	170M1561	JJS-15	3×1.5 + 1.5	14	R1
03A5-4	3.5	3.5	1.5	2.0	OFAF000H6	170M1561	JJS-15	3×1.5 + 1.5	14	R1
04A8-4	4.8	4.8	2.2	3.0	OFAF000H10	170M1561	JJS-15	3×1.5 + 1.5	14	R1
06A0-4	6.0	6.0	3.0	3.0	OFAF000H10	170M1561	JJS-15	3×1.5 + 1.5	14	R1
07A6-4	7.6	7.6	4.0	5.0	OFAF000H16	170M1561	JJS-15	3×2.5 + 2.5	14	R1
012A-4	12.0	12.0	5.5	7.5	OFAF000H16	170M1561	JJS-15	3×2.5 + 2.5	14	R1
014A-4	14.0	14.0	7.5	10.0	OFAF000H25	170M1563	JJS-30	3×2.5 + 2.5	12	R2
023A-4	23.0	23.0	11.0	15.0	OFAF000H32	170M1563	JJS-30	3×6 + 6	10	R2
027A-4	27.0	27.0	15.0	20.0	OFAF000H40	170M1565	JJS-40	3×10 + 10	8	R3

ACH580-01-...	Nominal ratings				Fuses[4]			Typical power cable sizes, Cu		Frame size
	Input current	Output current[1] light duty	Motor power[2]		gG fuse (IEC 60269)	uR/aR fuse[3][5] (DIN 43620)	UL class T[6][7][8]			
	I_1	I_{LD}	P_n	P_{LD}	ABB type	Bussmann type				
	A	A	kW	hp				mm² [9]	AWG [10]	
034A-4	34.0	34.0	18.5	25.0	OFAF000H50	170M1565	JJS-60	3×10 + 10	8	R3
044A-4	44.0	44.0	22.0	30.0	OFAF000H63	170M1566	JJS-60	3×10 + 10	6	R3
052A-4	52	52	30	40	OFAF000H80	170M1567	JJS-80	3×25 + 16	4	R4
052A-4	52	52	30	40	OFAF000H80	170M1567	JJS-80	3×25 + 16	4	R4 v2
065A-4	65	65	37	50	OFAF000H100	170M1568	JJS-100	3×35 + 16	4	R4
065A-4	65	65	37	50	OFAF000H100	170M1568	JJS-100	3×35 + 16	4	R4 v2
077A-4	77	77	45	60	OFAF000H100	170M1569	JJS-110	3×50 + 25	3	R4
077A-4	77	77	45	60	OFAF000H100	170M1569	JJS-110	3×50 + 25	3	R4 v2
078A-4	77	77	45	60	OFAF000H100	170M1569	JJS-110	3×50 + 25	3	R5
096A-4	96	96	55	75	OFAF00H125	170M3817	JJS-150	3×70 + 35	1	R5
124A-4	124	124	75	100	OFAF00H160	170M3817	JJS-200	3×95 + 50	2/0	R6
156A-4	156	156	90	125	OFAF0H250	170M5809	JJS-225	3×120 + 70	3/0	R7
180A-4	180	180	110	150	OFAF1H315	170M5810	JJS-300	3×150 + 70	4/0	R7
240A-4	240	240	132	200	OFAF1H355	170M5812	JJS-350	2×(3×70+35)	2×1/0 or 350 MCM	R8
260A-4	260	260	160	200	OFAF2H425	170M6812D	JJS-400	2×(3×95+50)	2×2/0	R8
302A-4	302	302	-	250	-	-	JJS-500	-	2×3/0	R9
361A-4	361	361	200	300	OFAF2H500	170M6814D	JJS-500	2×(3×120+70)	2×4/0	R9
414A-4	414	414	250	350	OFAF3H630	170M8554D	JJS-600	2×(3×150+70)	2×300 MCM	R9
U_1 = 500...600 V, P_n at U_n = 3-phase 575 V, 60 Hz										
02A7-6	2.7	2.7	1.5	2.0	-	-	JJS-15	-	14	R2
03A9-6	3.9	3.9	2.2	3.0	-	-	JJS-15	-	14	R2
06A1-6	6.1	6.1	4.0	5.0	-	-	JJS-15	-	14	R2
09A0-6	9.0	9.0	5.5	7.5	-	-	JJS-15	-	14	R2
011A-6	11.0	11.0	7.5	10.0	-	-	JJS-15	-	14	R2
017A-6	17.0	17.0	11.0	15.0	-	-	JJS-30	-	10	R2
022A-6	22	22	15.0	20.0	-	-	JJS-40	-	10	R3
027A-6	27	27	18.5	25.0	-	-	JJS-40	-	8	R3
032A-6	32	32	22.0	30.0	-	-	JJS-40	-	8	R3
041A-6	41	41	30	40	-	-	JJS-100	-	6	R5
052A-6	52	52	37	50	-	-	JJS-100	-	4	R5
062A-6	62	62	45	60	-	-	JJS-100	-	2	R5
077A-6	77	77	55	75	-	-	JJS-100	-	2	R5
099A-6	99	99	75	100	-	-	JJS-150	-	1/0	R7
125A-6	125	125	90	125	-	-	JJS-200	-	3/0	R7
144A-6	144	144	110	150	-	-	JJS-250	-	4/0	R8
192A-6	192	192	150	200	-	-	JJS-300	-	300 MCM	R9
242A-6	242	242	180	250	-	-	JJS-400	-	500 MCM	R9
271A-6	271	271	180	250	-	-	JJS-400	-	2x250 MCM	R9

1) I_{Ld} = Nominal current with 10% overload allowed for one minute every ten minutes.

2) P_n = Typical motor power with no overload capacity. P_{Ld} = Typical motor power in light duty use (10% overload). The kilowatt ratings apply to most IEC 4-pole motors. The horsepower ratings apply to most NEMA 4-pole motors.

3) For IEC installations, ABB recommends aR fuses. See hardware manual for guidelines in selecting between aR and gG fuses, and for additional fuse alternatives.

4) The recommended branch protection fuses must be used to maintain the IEC/EN/UL 61800-5-1 and CSA C22.2 No. 274 certifications. Refer to note 6 for circuit breaker protection.

5) IEC 61439-1: The drive is suitable for use on a circuit capable of delivering not more than 65 kA when protected by the fuses given in this table.

6) UL 61800-5-1, CSA C22.2 No. 274: The drive is suitable for use on a circuit capable of delivering not more than 100 kA symmetrical amperes (rms) at 600 V maximum when protected by the ABB recommended fuses.

7) Refer to Alternate Fuses, MMPs and Circuit Breakers for ABB Drives (3AXD50000645015 [English]) for additional UL fuses and circuit breakers that can be used as branch circuit protection.

8) Class J, CC, and CF fuses are also allowed at the same nominal current and voltage ratings.

9) IEC Installations: The cable sizing is based on max. 9 cables laid on a cable ladder side by side, three ladder type trays one on top of the other, ambient temperature 30 °C, PVC insulation, surface temperature 70 °C (EN 60204-1 and IEC 60364-5-52/2001). For other conditions, size the cables according to local safety regulations, appropriate input voltage and the load current of the drive.

10) NEC Installations: The cable sizing is based on NEC Table 310-15 for copper wires, 75 °C (167 °F) wire insulation at 40 °C (104 °F) ambient temperature. Not more than three current-carrying conductors in raceway or cable or earth (directly buried). For other conditions, size the cables according to local safety regulations, appropriate input voltage and the load current of the drive.

Terminal data for the power cables

Frame size	T1/U, T2/V, T3/W, L1, L2, L3, R-, R+/UDC+						PE			
	Min. wire size (solid/stranded)		Max. wire size (solid/stranded)		Tightening torque		Max. wire size (solid/stranded)		Tightening torque	
	mm^2	AWG	mm^2	AWG	N·m	lbf·ft	mm^2	AWG	N·m	lbf·ft
R1	0.2/0.2	24	6/4	10	1.0	0.7	16/16	6	1.5	1.1
R2	0.5/0.5	20	16/16	6	1.5	1.1	16/16	6	1.5	1.1
R3	0.5/0.5	20	35/35	2	3.5	2.6	35/35	2	1.5	1.1
R4	0.5/0.5	20	50	1	4.0	3.0	35/35	2	2.9	2.1
R4 v2	1.5/1.5	20	70	1	5.5	4.0	35/35	2	2.9	2.1
R5	6	6	70	1/0	15	11.1	35/35	-	2.2	1.6
R6	25	4	150	300 MCM	30	22.1	180 [1)]	350 MCM [1)]	9.8 [1)]	7.2 [1)]
R7	95	3/0	240	500 MCM	40	29.5	180 [1)]	350 MCM [1)]	9.8 [1)]	7.2 [1)]
R8	2×50	2×1/0	2×150	2×300 MCM	40	29.5	2×180 [1)]	2×350 MCM [1)]	9.8 [1)]	7.2 [1)]
R9	2×95	2×3/0	2×240	2×500 MCM	70	51.6	2×180 [1)]	2×350 MCM [1)]	9.8 [1)]	7.2 [1)]

1) In 400/480/575 V drives, cable lug or cable clamp is used for grounding.

Notes:
- The minimum specified wire size does not necessarily have sufficient current carrying capacity at maximum load.
- The maximum number of conductors per terminal is 1 except where indicated.

Weights and free space requirements

Frame size	Weights				Free space requirements for vertical installation													
					Stand alone										Side by side [1)]			
	IP21 (UL Type 1)		IP55 (UL Type 12)		IP21 (UL Type 1)				IP55 (UL Type 12)				All types		All types			
					Above		Below [2)]		Above		Below [2)]		Sides		Above		Below [2)]	
	kg	lb	kg	lb	mm	in	mm	in	mm	in	mm	in	mm	in	mm	in	mm	in
R1	4.6	10.1	4.8	10.6	65	2.56	86	3.39	137	5.39	116	4.57	150	5.91	200	7.87	200	7.87
R2	6.6	14.6	6.8	15.0	65	2.56	86	3.39	137	5.39	116	4.57	150	5.91	200	7.87	200	7.87
R3	11.8	26.0	13.0	28.7	65	2.56	53	2.09	200	7.87	53	2.09	150	5.91	200	7.87	200	7.87
R4	19.0	41.9	20.0	44.1	53	2.09	200	7.87	53	2.09	200	7.87	150	5.91	200	7.87	200	7.87
R4 v2	20.0	44.1	21.0	46.3	53	2.09	200	7.87	53	2.09	200	7.87	150	5.91	200	7.87	200	7.87
R5	28.3	62.4	29.0	64.0	75	2.95	200	7.87	100	3.94	200	7.87	150	5.91	200	7.87	200	7.87
R6	42.4	93.5	43.0	94.8	155	6.10	300	11.8	155	6.10	300	11.8	150	5.91	200	7.87	300	11.8
R7	54	119.1	56.0	123.5	155	6.10	300	11.8	155	6.10	300	11.8	150	5.91	200	7.87	300	11.8
R8	69	152.2	77	169.8	155	6.10	300	11.8	155	6.10	300	11.8	150	5.91	200	7.87	300	11.8
R9	97	213.9	103	227.1	200	7.87	300	11.8	200	7.87	300	11.8	150	5.91	200	7.87	300	11.8

1) Without free space on the sides.
2) Measured from the drive frame, not from the cable box.

Ambient conditions

This table shows the requirements for the ambient conditions when the drive is in operation (installed for stationary use).

Installation altitude	0 … 4000 m (0 … 13123 ft) above sea level. The output current must be derated at altitudes above 1000 m (3281 ft). The derating is 1% for each added 100 m (328 ft) above 1000 m (3281 ft). Above 2000 m (6562 ft), these grounding systems are permitted: TN-S (center-grounded wye), TT, and IT (ungrounded or high-resistance symmetrically grounded). For the installation requirements for corner-grounded systems at this altitude, contact your local ABB representative.
Surrounding air temperature	Operation: -15 … +50 °C (5 … 122 °F). No frost permitted. At temperatures over 40 °C (104 °F), the rated output current must be derated by 1% for each added 1 °C (1.8 °F). For derating exceptions, see the hardware manual. Storage (in the package): -40 … +70 °C (-40 … +158 °F).
Relative humidity	5 … 95%. No condensation permitted. Maximum permitted relative humidity is 60% in the presence of corrosive gases.
Contamination levels (IEC 60721-3-3: 2002)	Chemical gases: Class 3C2. Solid particles: Class 3S2. No conductive dust permitted.
Vibration (IEC 60068-2)	Max. 1 mm (0.04 in) (5 … 13.2 Hz), max. 7 m/s^2 (23 ft/s^2) (13.2 … 100 Hz) sinusoidal
Shock/Drop (ISTA)	Not permitted

Safe torque off (STO)

The drive has a Safe torque off function (STO) in accordance with IEC/EN 61800-5-2. It can be used, for example, as the final actuator device of safety circuits that stop the drive in case of danger (such as an emergency stop circuit).

When activated, the STO function disables the control voltage for the power semiconductors of the drive output stage, thus preventing the drive from generating the torque required to rotate the motor. The control program generates an indication as defined by parameter 31.22. If the motor is running when Safe torque off is activated, it coasts to a stop. Closing the activation switch deactivates the STO. Any faults generated must be reset before restarting.

The STO function has a redundant architecture, that is, both channels must be used in the safety function implementation. The safety data given is calculated for redundant use, and does not apply if both channels are not used.

WARNING! The STO function does not disconnect the voltage from the main and auxiliary circuits of the drive.

Notes:

- If stopping by coasting is not acceptable, stop the drive and machinery using the appropriate stop mode before activating the STO.
- The STO function overrides all other functions of the drive.

Wiring

The safety contacts must open/close within 200 ms of each other.

Double-shielded twisted-pair cable is recommended for the connection. The maximum length of the cabling between the switch and the drive control unit is 300 m (1000 ft). Ground the shield of the cable at the control unit only.

Validation

To ensure the safe operation of a safety function, a validation test is required. The test must be carried out by a competent person with adequate expertise and knowledge of the safety function. The test procedures and report must be documented and signed by this person. Validation instructions of the STO function can be found in the drive hardware manual.

Technical data

- Minimum voltage at IN1 and IN2 to be interpreted as “1”: 13 V DC
- STO reaction time (shortest detectable break): 1 ms
- STO response time: 2 ms (typical), 5 ms (maximum)
- Fault detection time: Channels in different states for longer than 200 ms
- Fault reaction time: Fault detection time + 10 ms
- STO fault indication (parameter 31.22) delay: < 500 ms
- STO warning indication (parameter 31.22) delay: < 1000 ms
- Safety integrity level (EN 62061): SIL 3
- Performance level (EN ISO 13849-1): PL e

The drive STO is a type A safety component as defined in IEC 61508-2.

For the full safety data, exact failure rates and failure modes of the STO function, refer to the drive hardware manual.

Markings

The applicable markings are shown on the type designation label of the drive.

CE UL RCM EAC KC EIP WEEE TÜV Nord UKCA CSA BACnet

Related documents

Document	Code (English)
ACH580-01 (0.75 to 250 kW, 1.0 to 350 hp) hardware manual	3AXD50000044839
ACH580 HVAC control program firmware manual	3AXD50000027537
ACS-AP-I, -S, -W and ACH-AP-H, -W Assistant control panels user's manual	3AUA0000085685
Drive composer PC tool user's manual	3AUA0000094606
Converter module capacitor reforming instructions	3BFE64059629
Declaration of China RoHS II Conformity	3AXD10001497382

Declarations of Conformity

ABB

EU Declaration of Conformity
Machinery Directive 2006/42/EC

We

Manufacturer: ABB Oy
Address: Hiomotie 13, 00380 Helsinki, Finland.
Phone: +358 10 22 11

declare under our sole responsibility that the following product:

Frequency converters

ACH580-01/-31

with regard to the safety function

Safe Torque Off

is in conformity with all the relevant safety component requirements of EU Machinery Directive 2006/42/EC, when the listed safety function is used for safety component functionality.

The following harmonized standards have been applied:

EN 61800-5-2:2007	Adjustable speed electrical power drive systems – Part 5-2: Safety requirements - Functional
EN IEC 62061:2021	Safety of machinery – Functional safety of safety-related control systems
EN ISO 13849-1:2015	Safety of machinery – Safety-related parts of control systems. Part 1: General requirements
EN ISO 13849-2:2012	Safety of machinery – Safety-related parts of the control systems. Part 2: Validation
EN 60204-1:2018	Safety of machinery – Electrical equipment of machines – Part 1: General requirements

The following other standards have been applied:

IEC 61508:2010, parts 1-2	Functional safety of electrical / electronic / programmable electronic safety-related systems
IEC 61800-5-2:2016	Adjustable speed electrical power drive systems – Part 5-2: Safety requirements - Functional

The product(s) referred in this Declaration of conformity fulfil(s) the relevant provisions of other European Union Directives which are notified in Single EU Declaration of conformity 3AXD10000497691.

Authorized to compile the technical file: ABB Oy, Hiomotie 13, 00380 Helsinki, Finland.

Helsinki, August 31, 2022
Signed for and on behalf of:

Mika Vartiainen
Local Division Manager
ABB Oy

Harri Muotonen
Product Unit Manager
ABB Oy

Document number 3AXD10000497329

Page 1 of 1

ABB

Declaration of Conformity
Supply of Machinery (Safety) Regulations 2008

We

Manufacturer: ABB Oy
Address: Hiomotie 13, 00380 Helsinki, Finland.
Phone: +358 10 22 11

declare under our sole responsibility that the following product:

Frequency converters

ACH580-01/-31

with regard to the safety function

Safe Torque Off

is in conformity with all the relevant safety component requirements of the Supply of Machinery (Safety) Regulations 2008, when the listed safety function is used for safety component functionality.

The following designated standards have been applied:

EN 61800-5-2:2007	Adjustable speed electrical power drive systems – Part 5-2: Safety requirements - Functional
EN IEC 62061:2021	Safety of machinery – Functional safety of safety-related control systems
EN ISO 13849-1:2015	Safety of machinery – Safety-related parts of control systems. Part 1: General requirements
EN ISO 13849-2:2012	Safety of machinery – Safety-related parts of the control systems. Part 2: Validation
EN 60204-1:2018	Safety of machinery – Electrical equipment of machines – Part 1: General requirements

The following other standards have been applied:

EN 61508:2010, parts 1-2	Functional safety of electrical / electronic / programmable electronic safety-related systems
EN 61800-5-2:2017	Adjustable speed electrical power drive systems – Part 5-2: Safety requirements - Functional

The product(s) referred in this declaration of conformity fulfil(s) the relevant provisions of other UK statutory requirements, which are notified in a single declaration of conformity 3AXD10001325928.

Authorized to compile the technical file: ABB Limited, Daresbury Park, Cheshire, United Kingdom, WA4 4BT.

Helsinki, August 31, 2022
Signed for and on behalf of:

Mika Vartiainen
Local Division Manager
ABB Oy

Harri Muotonen
Product Unit Manager
ABB Oy

Document number 3AXD10001329521

Page 1 of 1