ABB INDUSTRIAL DRIVES

ACS880-7107LC DC feeder units

Hardware manual

ACS880-7107LC DC feeder units

Hardware manual

3AXD50000752423 Rev C
EN
Original instructions
EFFECTIVE: 2023-08-22

Table of contents

4 Electrical installation

5 Installation checklist

6 Start-up

7 Operating instructions

8 Fault tracing

9 Maintenance

1

Introduction to the manual

Contents of this chapter

This chapter contains information on the manual.

Applicability

This manual is applicable to ACS880-7107LC DC feeder unit. The unit is a part of a complete multidrive system.

Safety instructions

Obey all safety instructions of the drive.

- Read the **complete safety instructions** before you install, commission, use or service the drive. The complete safety instructions are given in ACS880 liquid-cooled multidrive cabinets and modules safety instructions (3AXD50000048633 [English]).
- Read the warnings of the software function before you take the function in use or change its default parameter settings. Read the warnings of the parameter before you change its default setting. Refer to the firmware manual.

Target audience

This manual is intended for people who plan the installation, install, commission and do maintenance work on the drive, or create instructions for the end user of the drive concerning the installation and maintenance of the drive.

Read the manual before you work on the drive. You are expected to know the fundamentals of electricity, wiring, electrical components and electrical schematic symbols.

Categorization by number of strings and option code

The number of strings identifies information which concerns only a certain DC feeder unit design: the unit with one, two or three parallel strings (1×ST, 2×ST or 3×ST). The identifier is shown on the type designation label and in the technical data for each DC feeder unit type.

The option code (option +A123) identifies information which concerns only a certain optional selection. The options included in the unit are listed on the type designation label.

Use of component designations

Some device names in the manual include the component designation in brackets (for example, [Q20]). This will help you to identify the components in the circuit diagrams of the drive.

Terms and abbreviations

Term	Description
DC feeder unit	Connection point for an external energy storage to the DC bus of a drive system.
Drive	Frequency converter for controlling AC motors
Inverter unit	Inverter module(s) under control of one control unit, and related components. One inverter unit typically controls one motor.
Multidrive	Drive for controlling several motors which are typically coupled to the same machinery. Includes one supply unit, and one or several inverter units.
Supply unit	Supply module(s) under control of one control unit, and related components.

Related documents

You can find manuals on the Internet. See below for the relevant code/link. For more documentation, go to www.abb.com/drives/documents.

	Manuals for ACS880 multidrives cabinets

2

Operation principle and hardware description

Contents of this chapter

This chapter introduces the operation principle and construction of the DC feeder unit.

Operation principle

The DC feeder unit provides a connection point for an external energy storage to the common DC bus of a drive system. It enables transferring energy from a common DC bus of a drive into an external energy storage and discharging energy back to the DC bus. The energy storage can be, for example, a battery or super capacitor. The energy storage media does not belong to the DC feeder unit product offering.

One DC feeder unit can contain one single or up to 3 parallel connected strings.

Parallel strings must be connected to separate energy storages. Each parallel string must also have its own connection cabling.

Typically, the DC feeder unit is used in marine applications for heave compensation, peak load compensation, propulsion supply in harbors, or energy storing instead of an additional generator. The DC feeder unit can also be used in several other applications where energy storing and reuse is needed.

Overview diagram of the drive system

This diagram shows an example drive line up with an example DC feeder unit.

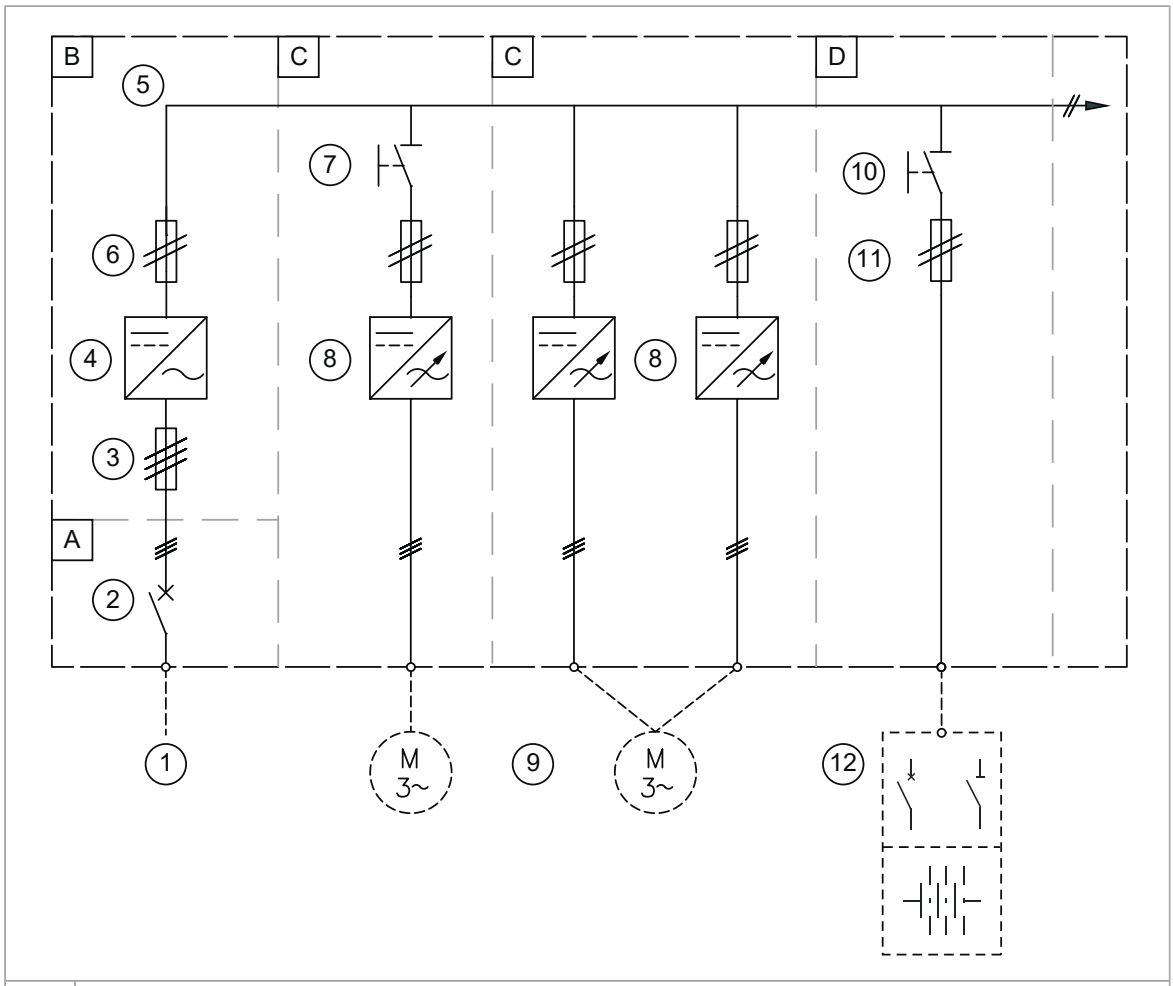

A	Incoming unit
B	Supply unit
C	Inverter unit
D	DC feeder unit
1	AC supply
2	Main breaker, or main contactor and main switch-disconnector
3	Input (AC) fuses
4	Supply module
5	DC bus
6	Supply and inverter module DC fuses
7	DC switch/disconnector (option +F286)
8	Inverter modules
9	Motor(s) (acquired by user)
10	DC switch/disconnector ([Q11], option +F290)
11	DC fuses [F11]
12	Energy storage (acquired by user) with disconnecting and protection devices

Overview diagram of the DC feeder unit

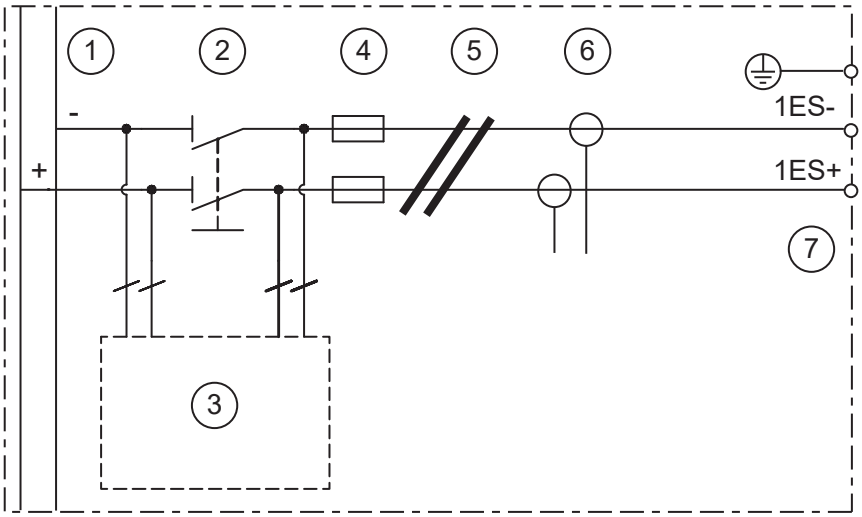

1	Drive DC busbars (+ and -)
2	DC switch/disconnector ([Q11], option +F290)
3	Charging circuit (switch: [Q10], resistors: [R10], option +F272)
4	DC fuses [F11]
5	Common mode filters ([R11], option +E208)
6	Current transducers ([T353], option +G353)
7	External DC connection terminals [ES-, ES+]

Layout drawings

Layout of a drive system with a DC feeder unit

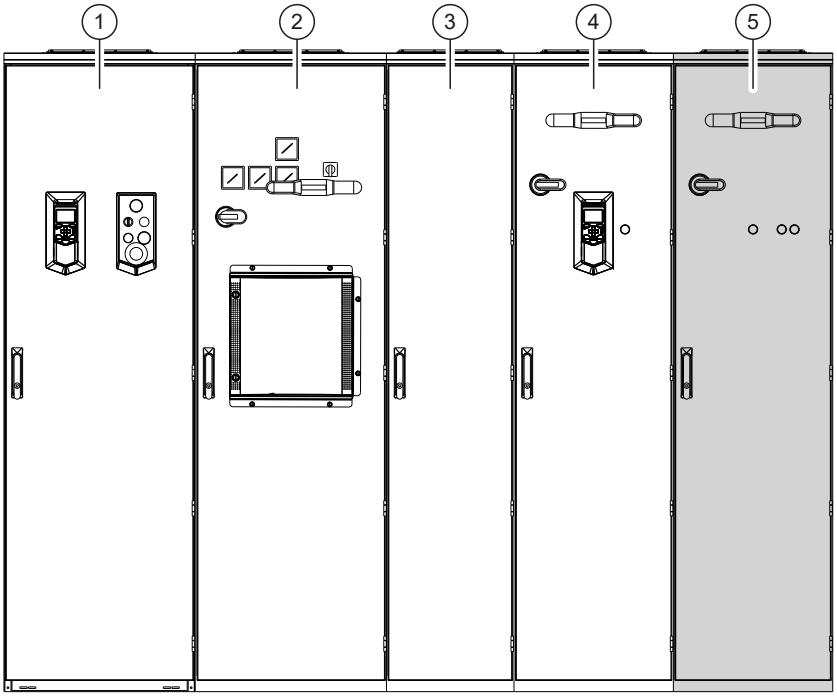

1	Auxiliary control cubicle
2	Incoming cubicle
3	Supply module cubicle
1…3	Supply unit
4	Inverter unit
5	DC feeder unit

Layout of a DC feeder unit

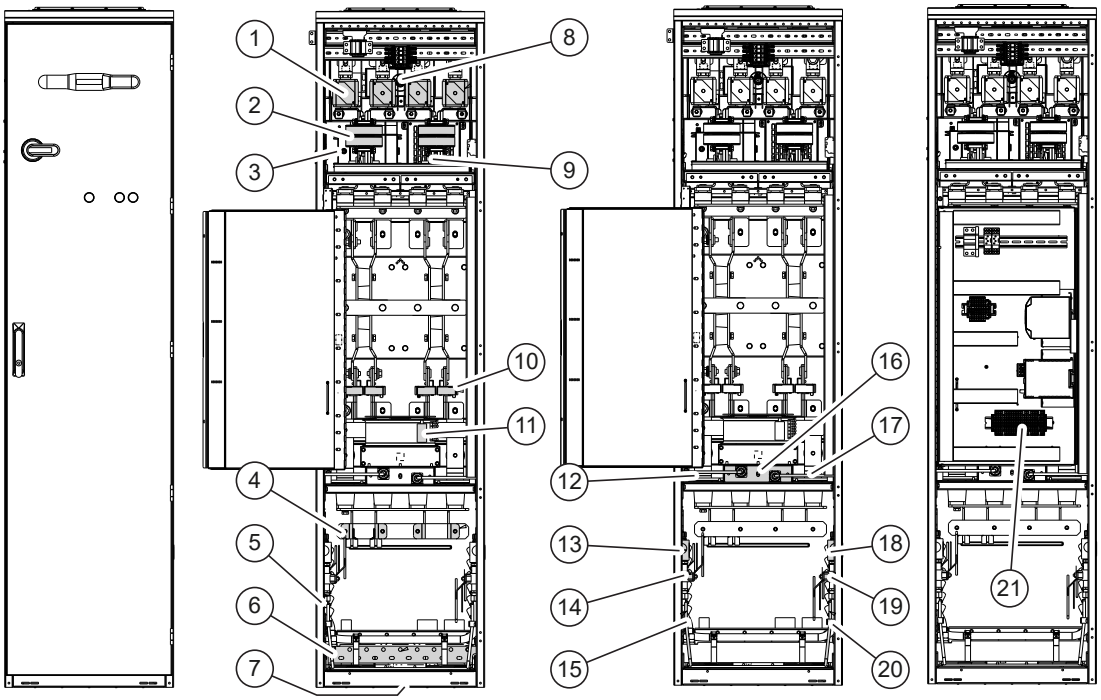

1	DC fuses [F11]
2	Common mode filters ([R11], option +E208)
3	Charging switch ([Q10], option +F272)
4	DC connection bus bars [1ES+, 1ES-, 2ES+, 2ES-]
5	Cabinet heater ([E95], option +G300)
6	PE bus bar [PE]
7	DC cable entry
8	DC switch ([Q11], option +F290)
9	Charging resistors ([R10], option +F272)
10	Current transducers ([T353], option +G353)
11	Fan [G115]
12	Cooling input pipe
13	Cooling inlet manifold
14	Inlet and drain valves
15	Draining pipe (input)
16	Heat exchanger
17	Cooling output pipe
18	Cooling outlet manifold
19	Outlet and drain valves
20	Draining pipe (output)
21	Terminal block for the user control connections [X350]

Control of the DC feeder unit

The table below shows the switches and indications lamps on the door of the unit.

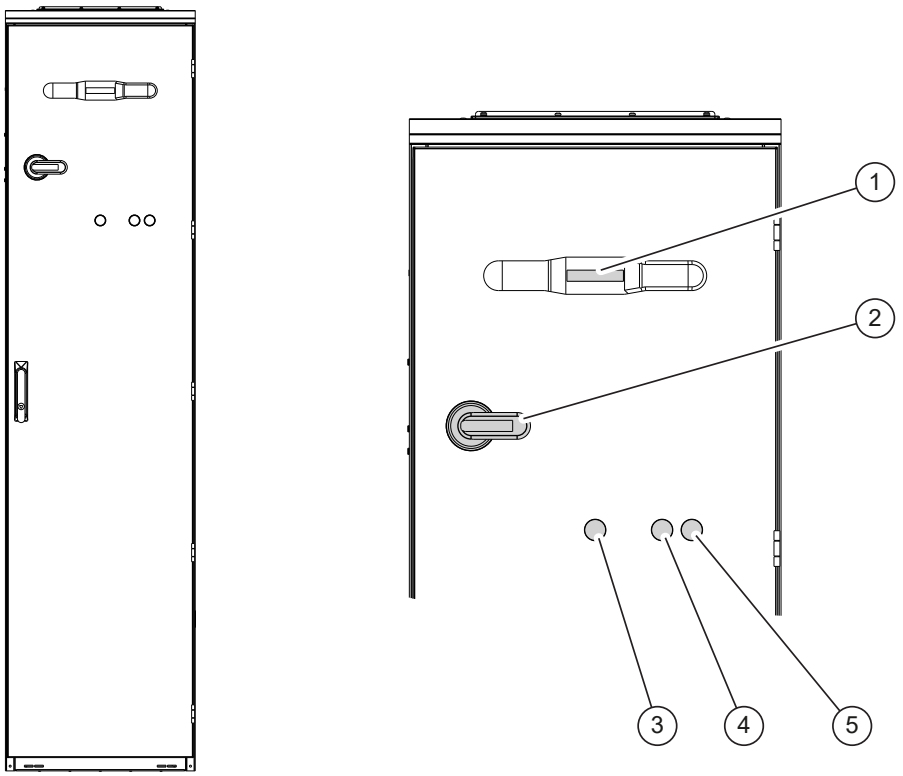

1	DC disconnector handle ([Q11], option +F290))
2	Charging circuit switch handle ([Q10], option +F272)
3	Indication lamp: DC switch disconnector interlocking released ([P11], option +F290)
4	Indication lamp: DC feeder unit disconnected ([P13], option +F290)
5	Indication lamp: Energy storage disconnected [P12].

User control signal interface

See Control connection diagram (page 36) for the user control connections. See Layout of a DC feeder unit (page 15) for the location of the terminal block [X350].

Type designation label of the DC feeder unit

Each converter unit has a type designation label attached onto the inside of the cubicle door. The type designation label includes the ratings, appropriate markings, a type designation and a serial number of the unit. An example is shown below.

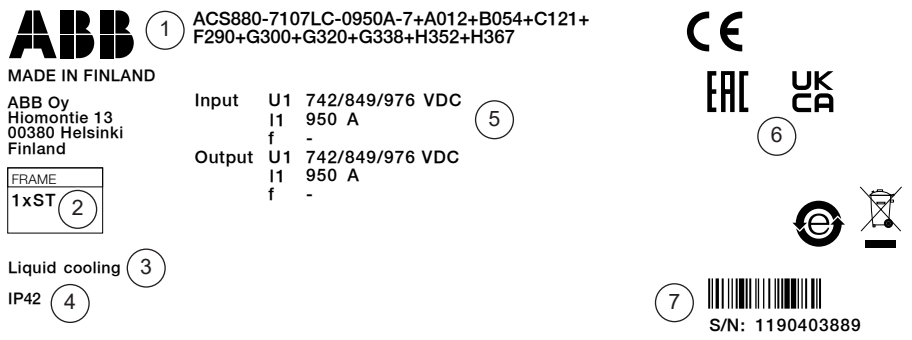

1	Type designation
2	Number or parallel strings
3	Cooling system and other additional data
4	Degree of protection
5	Ratings
6	Valid markings. See *ACS880 liquid-cooled multidrive cabinets and modules electrical planning instructions* (3AXD50000048634 [English]).
7	Serial number. The first digit of the serial number refers to the manufacturing plant. The next four digits refer to the unit's manufacturing year and week, respectively. The remaining digits complete the serial number so that there are no two units with the same number.

Type designation key

Type designation describes the composition of the unit in short. The complete designation code is divided in subcodes:

- The first digits form the basic code. It describes the basic construction of the unit. The fields in the basic code are separated by hyphens.
- The plus codes (or option codes) follow the basic code. Each plus code starts with an identifying letter (common for the whole product series), followed by descriptive digits. The plus codes are separated by plus signs.

Basic code

The basic code is described in the table below for an example code ACS880-7107LC-0350A-7.

CODE	DESCRIPTION
ACS880	Product series
7107LC	Product type. Liquid-cooled DC feeder unit.
350A	Size. See technical data
7	Voltage rating. 709…976 V DC. This is indicated in the type designation label as typical input voltage levels 742 / 849 / 976 (849 UL, CSA) V DC.

Option codes

The table below lists the option codes specific for the liquid-cooled DC feeder unit. The complete unit type code may also contain option codes that are not listed below. These option codes are common to the whole multidrive line-up. For the description of the common codes, see the supply unit hardware manual.

Code	Description
A012	50 Hz supply frequency
A013	60 Hz supply frequency
B054	IP42 (UL Type 1 Filtered)
B055	IP54 (UL Type 12)
C121	Marine construction
C132	Marine type approval. Refer to ACS880…+C132 marine type-approved cabinet-built drives supplement (3AXD50000039629 [English]).
C164	Plinth height 100 mm
C176	Door hinges on left
C179	Plinth height 200 mm
C205	Marine product certification issued by DNV GL
C206	Marine product certification issued by the American Bureau of Shipping (ABS)
C207	Marine product certification issued by Lloyd's Register (LR)
C209	Marine product certification issued by Bureau Veritas
C228	Marine product certification issued by China Classification Society (CCS)
C229	Marine product certification issued by Russian Maritime Register of Shipping (RS)
E208	Common mode filtering

Code	Description
E210	EMC/RFI filter for 2nd environment TN (grounded) or IT (ungrounded) system, category C3
F272	Internal charging circuit
F276	Capability of ride-through in voltage break max. 3 s. without tripping
F290	DC switch-disconnector in DC feeder unit
G300	Cabinet and module heating elements (external supply)
G301	Cabinet lighting
G304	Control (auxiliary) voltage 115 V AC
G314	Aluminum busbars
G315	Tin-plated copper DC busbars
G320	Control (auxiliary) voltage 230 V AC
G330	Halogen-free wiring and materials
G338	Wire marking class A1
G339	Wire marking class A2
G340	Wire marking class A3
G341	Wire marking class B1
G342	Wire marking class C1
G353	Current transducers
G453	Common mode filter temperature monitoring
H352	Power cabling exit from bottom
H353	Power cabling exit from top
H358	Cable gland plates (3 mm steel, undrilled)
H364	Cable gland plates (3 mm aluminum, undrilled)
H365	Cable gland plates (6 mm brass, undrilled)
H367	Control cabling through floor of cabinet
H368	Control cabling through roof of cabinet
H390	Cable entry, 72 mm diameter
H394	Cable entry, Roxtec frame without sealing components
P913	Special color (RAL Classic)
P966	Special color (other than RAL Classic)
R700	Printed manuals in English
R701	Printed manuals in German[1)]
R702	Printed manuals in Italian[1)]
R705	Printed manuals in Swedish[1)]
R706	Printed manuals in Finnish[1)]
R707	Printed manuals in French[1)]
R708	Printed manuals in Spanish[1)]
R711	Printed manuals in Russian[1)]
R712	Printed manuals in Chinese[1)]

[1)] The delivery can include manuals in English if the requested language is not available.

3

Guidelines for planning electrical installation

Contents of this chapter

This chapter contains electrical planning instructions.

Limitation of liability

The installation must always be designed and made according to applicable local laws and regulations. ABB does not assume any liability whatsoever for any installation which breaches the local laws and/or other regulations. Furthermore, if the recommendations given by ABB are not followed, the drive may experience problems that the warranty does not cover.

North America

Installations must be compliant with NFPA 70 (NEC)[1)] and/or Canadian Electrical Code (CE) along with state and local codes for your location and application.

[1)] National Fire Protection Association 70 (National Electric Code).

ABB is not responsible for the energy storage selection or protection of the energy storage.

Generic guidelines

Refer to ACS880 liquid-cooled multidrive cabinets and modules electrical planning instructions (3AXD50000048634 [English]) for the generic guidelines for planning the electrical installation (selecting cables, routing cables, etc.) of multidrive cabinets and modules.

Defining the rating for the DC feeder unit

In the instructions below, the DC feeder unit rating is defined for a battery. The instructions are also applicable to other energy storage types.

1. Specify the continuous load current (I_{n_bat}) of the DC feeder unit and the required charging current (I_C) for the battery.
   I_{n_bat} = continuous load current of the DC feeder unit
   I_C = load current of the DC feeder unit while charging the battery
   $I_C = C \times I_{n\_bat}$
   C: C rating for the battery. Typical values: 0.7 / 1 / 2 / 3.
2. Make sure that the nominal current (I_n) of the DC feeder unit is higher than the continuous load current (I_{n_bat}) and the charging current (I_C).
3. For the DC feeder unit of frame size 2×ST or 3×ST (parallel strings of the DC feeder unit), split the battery pack to equal parts. Observe that the nominal current I_1 of each DC feeder string is higher or same as the continuous load current (I_{n_bat}) and the charging current (I_C) of the battery section connected to that DC feeder unit string. You can connect several battery sections to one DC feeder unit string. You must not connect a battery section to several DC feeder unit strings.
4. For each DC feeder unit string: Define the short circuit current provided by the battery connected to the string. Observe that the current does not exceed the short circuit current rating. Refer to Short circuit current ratings (page 60).
5. Observe that the sum short circuit current of the DC feeder unit strings does not exceed the allowed maximum summary peak current for the DC feeder unit. Refer to Short circuit current ratings (page 60).
6. Make sure that the selected cables are protected by the DC feeder unit fuses against a fault at the end of cable on the battery side.
   If this is not the case, splitting the battery in smaller sections and connecting those via DC feeder unit strings with lower current ratings can improve the situation. The fuse rating changes according to the nominal current I_1 of each string.
7. Make sure that the selected cables are protected by the battery fuses against a fault at the end of the cable on the DC feeder unit side.

Equipping the DC feeder unit with a charging circuit

If you equip the DC feeder unit with a DC switch/disconnector (option +F290), it is also possible to equip it with a charging circuit (option +F272) . The charging circuit is intended for charging a capacitor. It is not intended for charging a battery.

The maximum capacitances for each DC feeder unit frame size are:

- 1×ST: 9 mF
- 2×ST: 18 mF
- 3×ST: 27 mF.

Implementing protections for the energy storage

General principles

The requirements for the customer-defined protections at the energy storage end:

- disconnecting device between the drive and energy storage system (for example, isolation disconnector switch, withdrawable circuit breaker)
- overload and short circuit protection for the cabling (for example, circuit breaker with thermal or electromagnetic trip unit)
- overload and short circuit protection for the energy storage elements itself (for example, integrated overload protection in batteries).

Selecting a protective device for the energy storage

The customer (or the system integrator) must equip the energy storage with a protective device. The protective device does not belong to the drive delivery.

The protective device must provide an overload and short-circuit protection for the energy storage. If there is no other protection device for the cables at the energy storage end, the protective device of the energy storage must also provide the overload and short-circuit protection for the cable(s).

The customer (or the system integrator) must verify the operation of the protective device by short circuit calculations taking into account the impedances of the drive, filter (if any), cabling and energy storage, and minimum and maximum state of charge of the energy storage. The customer (or the system integrator) must take into account the impact of ageing to storage impedances.

Energy storage disconnecting (isolating) device

The customer (or the system integrator) must equip the energy storage with an disconnecting (isolating) device. The disconnecting device is not included in the drive delivery.

Protecting the energy storage cable

ABB equips the DC feeder unit with fuses as standard. Make sure that the fuses protect also the cables in a cable short-circuit situation.

The customer (or the system integrator) must equip the energy storage with overload and short circuit protection for the cable.

Energy storage discharging device

When necessary, the customer (or the system integrator) must equip the energy storage with a discharging device. If the energy storage is a super capacitor, ABB recommends to install a discharging device.

Implementing an interlocking for the DC switch/disconnector (option +F290)

Unit equipped with DC switch/disconnector ([Q11], option +F290): User must connect an external power supply for the interlocking circuit of the DC switch disconnector. Interlocking is active when the power supply is de-energized and inactive when energized. Active interlocking prevents the closing (but not the opening) of the DC switch/disconnector under load. The user must not close or open the DC switch/disconnector under load as this can cause damage.

Specification: 24 V / 7 W. See also the connection diagrams.

WARNING! Do not operate (close or open) the DC switch/disconnector (Q11) under load. It can damage the switch.

Selecting and routing the energy storage cables

Recommended cables

The customer (or the system integrator) must acquire and connect the energy storage cables. It is possible to use shielded cables with 2, 3 or 4 conductors. ABB recommends to use shielded cables with 4 conductors.

Refer to the table below for the cables and possible configurations.

Cable type	Positive	Negative	PE (ground)
2-conductor shielded cable	1 conductor	1 conductor	Shield[1)]
3-conductor shielded cable	1 conductor	1 conductor	1 conductor + shield
4-conductor shielded cable	2 conductors	2 conductors	Shield[1)]

1) The shield must meet the requirements of IEC 61439-1. If the shield does not meet the requirements, an additional PE conductor or cable is required.

ABB does not recommend to use single core cables. If it necessary to use single core cables, obey these guidelines:

- Use shielded cables. Ground the cable shields only at one end.
- Put the cables in groups of 2 or 4.
- Attach the cables according to the requirements to withstand the apparent short circuit forces.

If the DC feeder has parallel strings, obey the additional guidelines in section Parallel connection (page 25).

Typical cable sizes

See the technical data.

Minimizing electromagnetic interference

The customer (or the system integrator) must obey these rules in order to minimize the electromagnetic interference caused by rapid current changes in the energy storage cables:

- Shield the energy storage cabling completely, either by using shielded cable or a metallic enclosure. Unshielded single-core cable can only be used if it is routed inside a cabinet that efficiently suppresses radiated emissions.
- Install the cables away from other cable routes.
- Avoid long parallel runs with other cables. The minimum recommended separation distance for parallel cabling is 0.3 m (1 ft).
- Cross other cables at right angles.

Keep the cable as short as possible in order to minimize the radiated emissions.

EMC compliance of the complete installation

ABB has not verified that the EMC requirements are fulfilled with external energy storage and its cabling. The EMC compliance of the complete installation must be considered by the customer (or the system integrator).

Parallel connection

One DC feeder unit can contain one single or up to 3 parallel connected strings.

Parallel strings must have separate energy storages. Each parallel string must also have its own connection cabling.

4

Electrical installation

Contents of this chapter

This chapter contains the electrical safety precautions, instructions for measuring the insulation resistance of the external power cabling, and instructions for connecting the external power cabling and control cabling.

Electrical safety precautions

These electrical safety precautions are for all personnel who do work on the drive, motor cable or motor.

WARNING!
Obey these instructions. If you ignore them, injury or death, or damage to the equipment can occur.

If you are not a qualified electrical professional, do not do installation or maintenance work.

Do these steps before you begin any installation or maintenance work.

1. Clearly identify the work location and equipment.
2. Disconnect all possible voltage sources. Make sure that re-connection is not possible. Lock out and tag out.
   - Open the main disconnecting device of the drive.
   - Open the charging switch if present.
   - Open the disconnector of the supply transformer. (The main disconnecting device in the drive cabinet does not disconnect the voltage from the AC input power busbars of the drive cabinet.)
   - If the drive is equipped with a DC/DC converter unit (optional) or a DC feeder unit (optional): Open the DC switch-disconnector ([Q11], option +F286 or

+F290) of the unit. Open the disconnecting device of the energy storage connected to the unit (outside the drive cabinet).
- Open the auxiliary voltage switch-disconnector (if present), and all other possible disconnecting devices that isolate the drive from dangerous voltage sources.
- In the liquid cooling unit (if present), open the switch-disconnector of the cooling pumps.
- If you have a permanent magnet motor connected to the drive, disconnect the motor from the drive with a safety switch or by other means.
- Disconnect all dangerous external voltages from the control circuits.
- After you disconnect power from the drive, always wait 5 minutes to let the intermediate circuit capacitors discharge before you continue.

3. Protect any other energized parts in the work location against contact.
4. Take special precautions when close to bare conductors.
5. Measure that the installation is de-energized. Use a quality voltage tester. If the measurement requires removal or disassembly of shrouding or other cabinet structures, obey the local laws and regulations applicable to live working (including – but not limited to – electric shock and arc protection).
   - Before and after you measure the installation, verify the operation of the voltage tester on a known voltage source.
   - Make sure that the voltage between the drive input power terminals (L1, L2, L3) and the grounding (PE) busbar is zero.
   - Make sure that the voltage between the drive output terminals (T1/U, T2/V, T3/W) and the grounding (PE) busbar is zero.

     Important! Repeat the measurement also with the DC voltage setting of the tester. Measure between each phase and ground. There is a risk of dangerous DC voltage charging due to leakage capacitances of the motor circuit. This voltage can remain charged for a long time after the drive power-off. The measurement discharges the voltage.
   - Make sure that the voltage between the drive DC terminals (UDC+ and UDC-) and the grounding (PE) terminal is zero. In cabinet-built drives, measure between the drive DC busbars (+ and -) and the grounding (PE) busbar.

WARNING!
The busbars inside the cabinet of liquid-cooled drives are partially coated. Measurements made through the coating are potentially unreliable, so only measure at uncoated portions. Note that the coating does not constitute a safe or touch-proof insulation.

6. Install temporary grounding as required by the local regulations.
7. Ask for a permit to work from the person in control of the electrical installation work.

Measuring the insulation resistance of the DC cabling

WARNING!
Obey the safety instructions of the drive. If you ignore them, injury or death, or damage to the equipment can occur. If you are not a qualified electrical professional, do not do installation, commissioning or maintenance work.

WARNING!
Open the DC switch/disconnector [Q11] of the unit. Make also sure that the charging switch [Q10] is open.

WARNING!
Do not do voltage withstand or insulation resistance tests on the drive. The tests can cause damage to the drive. Every drive is tested for insulation between the main circuit and the chassis at the factory. Also, there are voltage-limiting circuits inside the drive which cut down the testing voltage automatically.

Measure the insulation resistance of the DC cabling as follows:

1. Make sure that the cable is disconnected both at the drive end and at the other end: all conductors (including the grounding conductor) and the cable shield.
2. At the drive end, connect all conductors and shield of the cable together and to the grounding busbar (PE).
3. Disconnect one conductor and measure the insulation resistance between the conductor and the grounding busbar (PE) by using a measuring voltage of 1 kV DC. The insulation resistance must be higher than 1 Mohm.
4. Disconnect another conductor and measure its insulation resistance. Repeat this for all remaining conductors (including the cable shield).

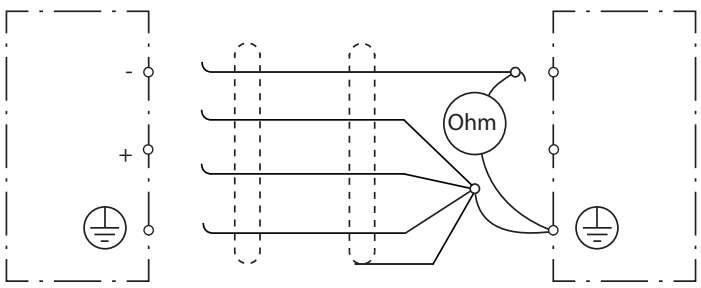

Connecting the DC power cables and the disconnector status monitoring cable

Use of fasteners in cable lug connections

Use the bolts, nuts and washers delivered with the drive. Install all the fasteners in the correct order. See the figure below. Tighten the cable lug to the torque specified for the connection.

Cable lug on one side of the busbar

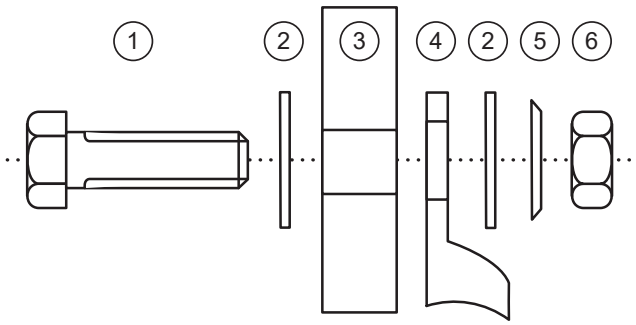

Cable lugs on both sides of the busbar

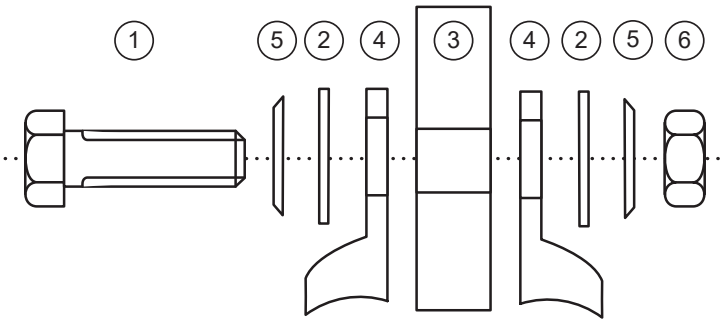

1	Bolt	4	Cable lug
2	Plain washer	5	Spring washer
3	Busbar	6	Nut

Connection diagram

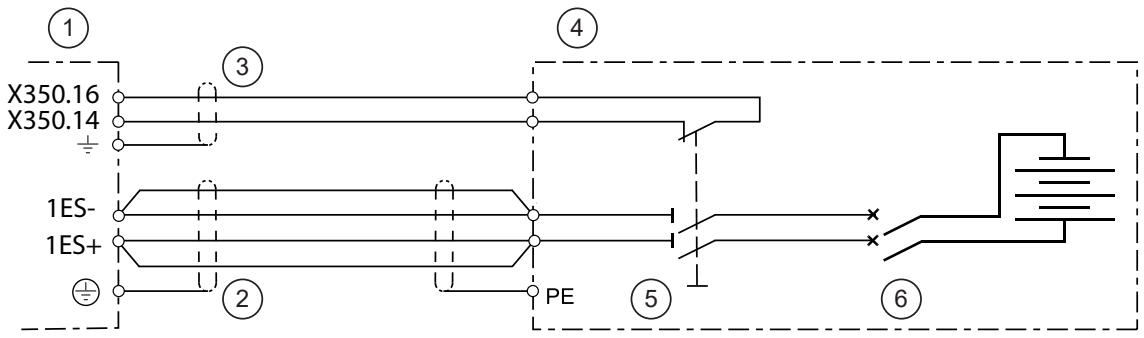

1	DC feeder unit, single string version. The terminals for the parallel strings are 2ES+, 2ES-, 3ES+ and 3ES-. Connections are otherwise similar with the one-string version.
2	Shielded 4-conductor power cable (customer-acquired). 360 degree grounding of the cable shield at the drive cable entry.
3	Shielded disconnector status monitoring cable (customer-acquired). 360 degree grounding of the cable shield at the drive cable entry.
4	Energy storage (customer-acquired)
5	Energy storage disconnector (customer-acquired)
6	Energy storage protective circuit breaker (customer-acquired)

Connection procedure

WARNING!
Obey the safety instructions of the drive. If you ignore them, injury or death, or damage to the equipment can occur. If you are not a qualified electrical professional, do not do installation, commissioning or maintenance work.

Stop the drive and do the steps in section Electrical safety precautions (page 27) before you start the work.

Removing shrouds

1. Open the door of the incoming cubicle.
2. Remove the shrouding and assembly plates covering the input terminals.

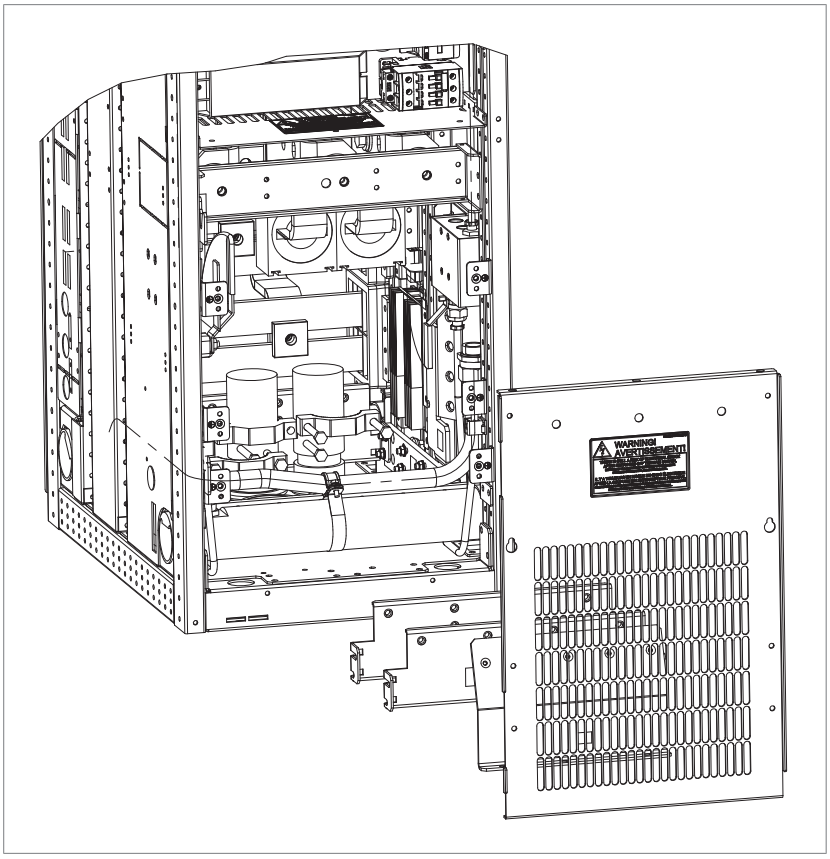

Connecting the cables

This section describes the power cable connecting procedure for a bottom cable entry with the standard cable entry plate. The standard cable entry plate has conductive sleeves for the 360 degree grounding of the cable shields. If the drive or unit has another type of cable entry plate, such as a Roxtec cable entry plate (option +H394), or cable gland plate (option +H358), refer also to the instruction of the related non-ABB installation accessories. For example, refer to the Roxtec instructions or the instructions by the cable gland manufacturer.

1. IP54 cabinet: Remove the rear horizontal cable support bracket and the cable entry plate.
2. IP54 cabinet: Remove a sealing grommet from the cable entry plate for each cable. Cut hole into the rubber grommet and slide it onto the cable.

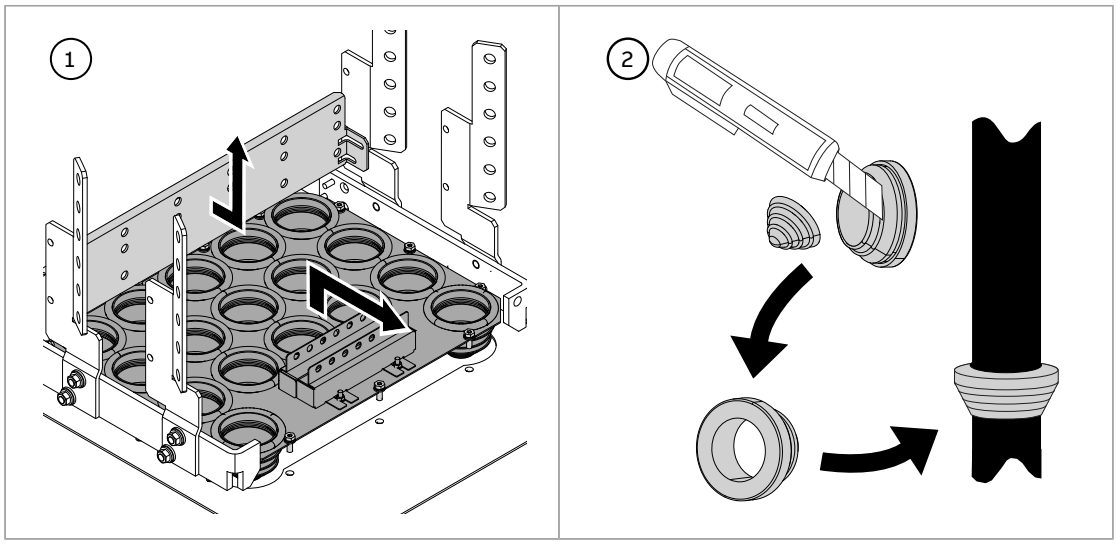

3. Lead the cables inside the cabinet through the cable entry plate. If there are several cables, use the rear 3 holes first.
   IP54 cabinet: Attach the sealing grommets to the cable entry plate. Attach also the cable entry plate, and the cable support.
4. For each cable, strip off 3…5 cm (1.2 … 2 inches) of the outer insulation above the cable entry plate. Strip also the end of the cable and the end of the conductors.

Twist the shield to form a PE conductor, and mark it with yellow-green tape or heat-shrink tubing.

5. For each cable, attach cable lugs at the end of the PE conductor (twisted shield) and current conductors.

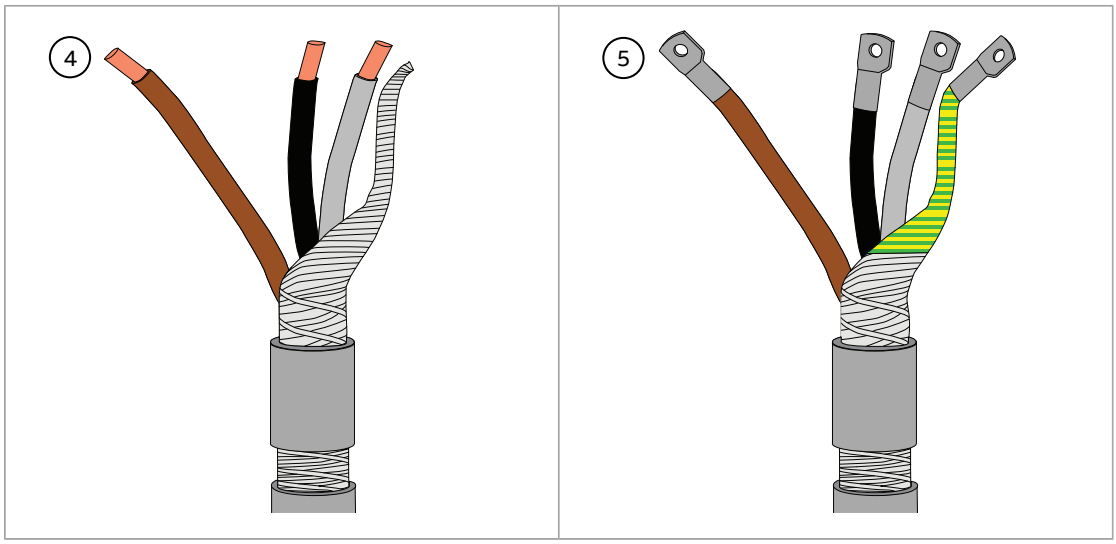

WARNING!
Apply grease to stripped aluminum conductors before you attach them to non-coated aluminum cable lugs. Obey the grease manufacturer's instructions. Aluminum-aluminum contact can cause oxidation in the contact surfaces.

6. For each cable, attach the conductive sleeve (a) to the bare cable shield with a cable tie. Attach the cable to the support bracket with a clamp (b).

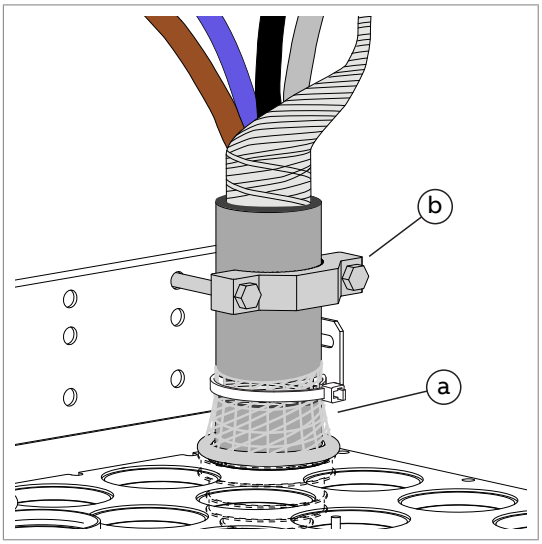

7. For each cable, connect the DC+ and DC- conductors to the applicable DC terminals. Connect the cable shield to the PE busbar. Use the bolts, nuts, and washers included in the delivery, and the connection method specified in Use of fasteners in cable lug connections (page 30). For the DC terminal connections, use M12 fasteners and a tightening torque of 70 N·m (52 lbf·ft). For the PE connection(s), use M10 fasteners and a tightening torque of 42 N·m (31 lbf·ft).

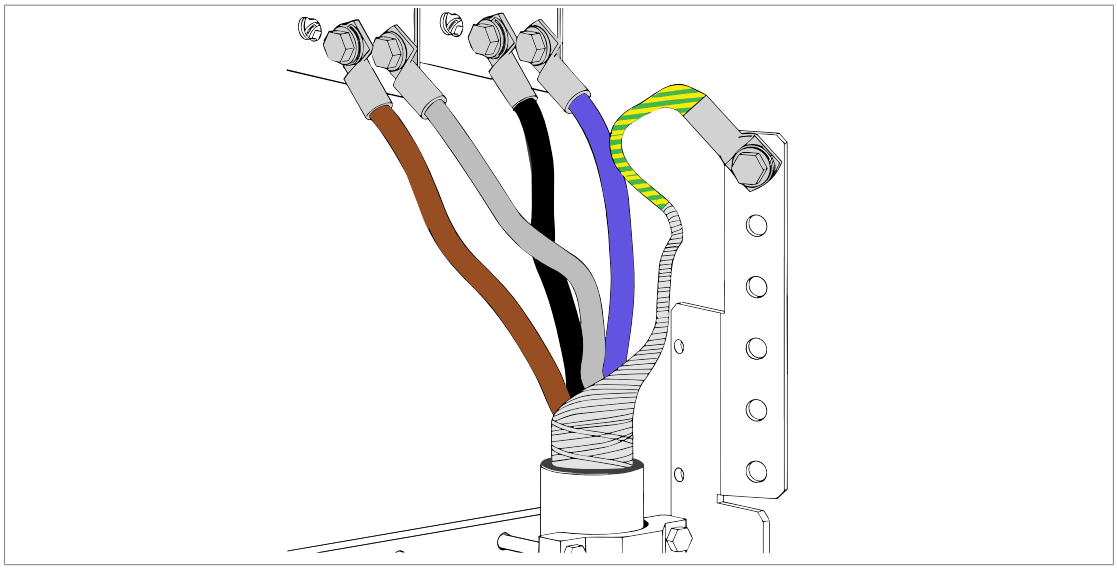

8. If there are more than 3 cables, attach additional cable support brackets for them.
9. Lead the monitoring cable for the energy storage disconnector into the unit and connect it to the applicable terminals. For more information, refer to the control cable connection instructions.
10. At the energy storage, connect the cables according to the instructions of the energy storage manufacturer.

Installing shrouds

1. Install the shrouding removed earlier.
2. Close the cubicle door.

Connecting the control cables

Control connection diagram

The diagram below shows the monitoring and control signal connections for the user, and the control circuits for the status indicator lamps on the cabinet door.

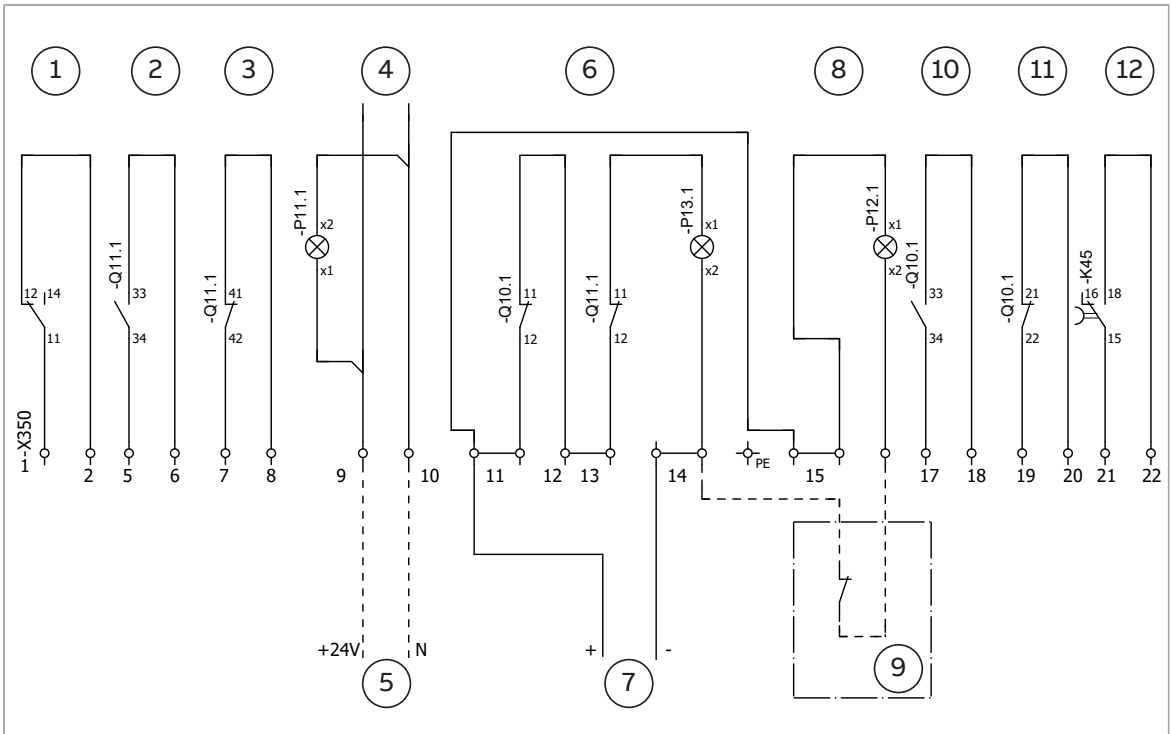

X350	Terminal block for the control connections. For the location, see Layout of a DC feeder unit (page 15).
K45	Unit with a common mode filter ([R11.11, R11.12, F45], option +E208): Overtemperature relay.
Q10.1	Unit with charging switch ([Q10], option F272): Charging switch
Q11.1	Unit with DC switch disconnector ([Q11], option F290): DC switch/disconnector
P11.1	Unit with DC switch disconnector ([Q11], option F290): Indicator lamp on cabinet door: switch [Q11.1] interlocking is released. See no. 5 and 4.
P13.1	Unit with DC switch disconnector ([Q11], option F290): Indicator lamp on cabinet door: switch [Q11.1] disconnected and switch [Q10] disconnected (if included)
P12.1	Indicator lamp on cabinet door: Energy storage disconnector is disconnected. See no. 10.
1	Cooling fan status indication. Energized: Fan in operation. Optional user-connection is not shown.
2	Unit with DC switch disconnector ([Q11], option +F290): Q11.1 status indication. Open contact: Q11.1 is open. Optional user-connection is not shown.
3	Unit with DC switch disconnector ([Q11], option +F290): Q11.1 status indication. Closed: Q11.1 is open. Optional user-connection is not shown.
4	Unit with DC switch disconnector ([Q11], option +F290): Q11.1 interlocking. Obligatory user-connection (no. 5) is shown with dashed line. When de-energized, the interlocking prevents accidental closure of the DC switch disconnector.
5	Unit with DC switch disconnector ([Q11.1], option +F290): External power supply for the interlocking circuit (no. 4), 24 V / 7 W. Obligatory user-connection is shown with dashed line. De-energized: Interlocking is active. Closure of Q11 is not possible. Energized: Interlocking is inactive.
6	Circuit for the DC feeder disconnected indication. Internal connections.
7	Supply for circuit no. 6 and 8. Internal connection.
8	Circuit for energy storage disconnected indication.

9	Energy storage disconnector monitoring. Obligatory user-connection is shown with dashed line.
10	Unit equipped with charging switch ([Q10], option +F272): Q10 status indication. Open contact: Q10 is open. Optional user-connection is not shown.
11	Unit equipped with charging switch ([Q10], option +F272): Q10 status indication. Closed contact: Q10 is open. Optional user-connection is not shown.
12	Unit equipped with a common mode filter ([R11.11, R11.12, F45], option +E208): Overtemperature indication of filter. Optional user-connection is not shown in the diagram.

Connection procedure

WARNING!
Obey the safety instructions of the drive. If you ignore them, injury or death, or damage to the equipment can occur. If you are not a qualified electrical professional, do not do installation, commissioning or maintenance work.

1. Stop the drive and do the steps in section Electrical safety precautions (page 27) before you start the work.
2. Open the door of the DC/DC converter cubicle and remove the shrouding. See Connecting the DC power cables and the disconnector status monitoring cable (page 30).
3. Run the control cables inside the cubicle. Ground the cable shields 360° at the cable entry. See subsection Grounding the outer shields of the control cables 360° at the cabinet entry (page 37).
4. Run the cables to the control connections terminal X350 and connect. See Control connection diagram (page 36). Leave enough slack at the hinges of the swing out frame. The terminal block for the user connections is on a swing-out frame. The frame needs to be opened for maintenance work.

Grounding the outer shields of the control cables 360° at the cabinet entry

Ground the outer shields of all control cables 360° with the EMI conductive cushions at the cabinet entry. The grounding principle is the same for top and bottom entry cables. The illustrations show the bottom entry. The actual design details can vary.

1. If necessary, remove the shrouding in front of the cable entry.
2. Put the cables in sequence from the smallest to the largest. This will help to achieve a good contact with the cushions.
3. Loosen the tightening bolts of the EMI conductive cushions and pull them apart.
4. Cut holes in the grommets and put the cables through the grommets.
5. Peel the insulation from the part of the cable that will be in contact with the EMI conductive cushion.
6. Put the cables between the cushions and attach them with cable ties for strain relief.
7. Move the cushions back together.
8. Tighten the bolts to make sure that the EMI conductive cushions press tightly around the peeled part of the cables.

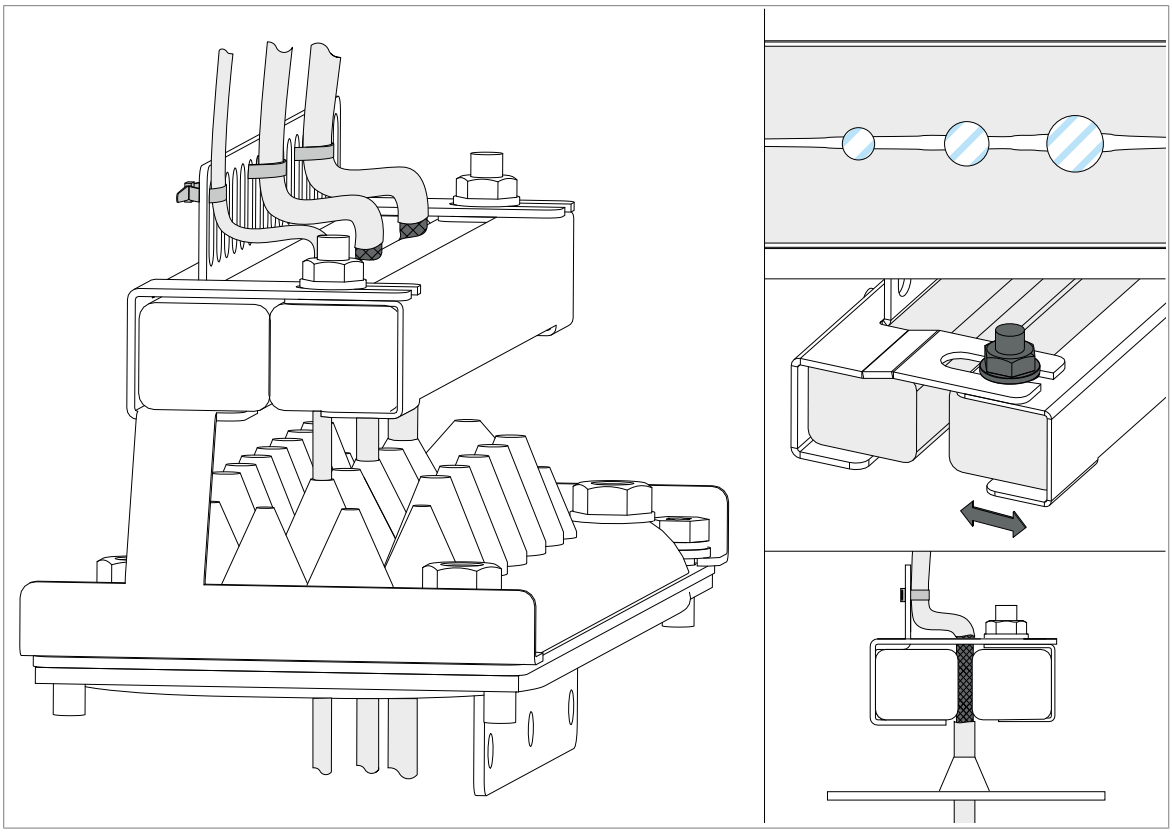

If the outer surface of the shield is non-conductive:

- Cut the shield at the midpoint of the peeled part. Be careful not to cut the conductors or the grounding wire.
- Turn the conductive side of the shield inside out over the insulation.
- Cover the exposed shield and the peeled cable with copper foil to keep the shielding continuous.

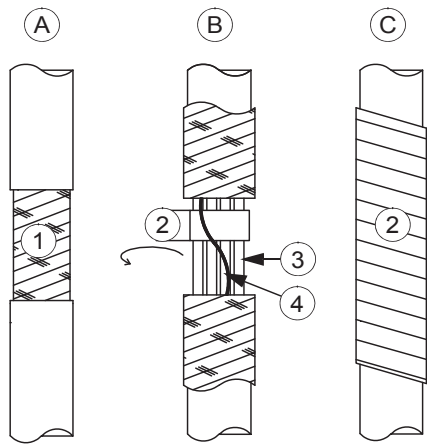

A	Stripped cable
B	Conductive surface of the shield exposed
C	Stripped part covered with copper foil
1	Cable shield
2	Copper foil
3	Shielded twisted pair
4	Grounding wire

5

Installation checklist

Contents of this chapter

This chapter contains a checklist of the electrical installation of the DC feeder unit. For the complete installation checklist of the drive, see *ACS880-107LC inverter units hardware manual* (3AXD50000196111 (English)).

Make sure that ...	☑
The energy storage has been equipped with a protective circuit breaker for overload and short circuit protection of the power cabling.	☐
Unit equipped with DC switch disconnector ([Q11], option F290): Make sure that the switch is turned to open position and locked.	☐
Unit equipped with charging switch ([Q10], option F272): Make sure that the switch is turned to open position and locked.	☐
The energy storage cable has been connected to the correct terminals (drive and energy storage), and the terminals have been tightened to the torque specified.	☐
There is an adequately sized protective earth (ground) conductor between the energy storage and the drive, the conductor has been connected to the appropriate terminal, and the terminal has been tightened to the torque specified. The grounding connection has also been measured according to the regulations.	☐
The obligatory control connections have been done: • the cable for the energy storage disconnector status monitoring • Unit equipped with DC switch disconnector ([Q11], option F290): The power supply cable for the DC switch disconnector interlocking circuit.	☐

6

Start-up

Contents of this chapter

This chapter contains the start up instructions for the DC feeder unit ACS880-7107LC.

Start-up procedure

Tasks	☑
Safety	
WARNING! Obey the safety instructions of the drive. If you ignore them, injury or death, or damage to the equipment can occur. If you are not a qualified electrical professional, do not do installation, commissioning or maintenance work.	☐
Checks/Settings with no voltage connected	
Make sure that it is safe to start the work. Do the steps in section Electrical safety precautions (page 27).	☐
Make sure that the disconnector of the supply transformer is locked to the off (0) position, that means no voltage is, or cannot be connected to drive inadvertently.	☐
Make sure that all external auxiliary circuits are switched off and disconnected. See the start-up instructions in the supply unit hardware manual.	☐
Make sure that the supply unit is switched off, and the drive system has been isolated from the supply network.	☐
DC feeder unit with the DC switch/disconnector ([Q11], option +F290): Make sure that the DC switch/disconnector [Q11] and the DC/DC converter charging switch [Q10] are open and locked.	☐
Make sure that the energy storage disconnecting device is open and locked to open position (customer or system integrator-installed device).	☐

Tasks	☑
Make sure that the mechanical and electrical installation of the unit has been inspected and is OK. See the installation checklist.	☐
Make sure that the drive is ready for the power up: • The supply and inverter units have been installed according to the instructions given in their hardware manuals. • The supply unit has been started up according to the instructions given in the appropriate supply unit manual. • The inverter units have been started up according to the instructions given in the hardware manual and appropriate firmware manual. **Note:** If the drive has been stored over one year: Reform the electrolytic DC capacitors in the DC bus of the drive. See the separate reforming instructions (available in the Internet or from your local ABB representative).	☐
Close the auxiliary voltage circuit breaker of the DC feeder unit [F22]. Close also other circuit breakers of auxiliary circuit of the DC feeder unit if any (vary depending on the delivery). See the circuit diagrams delivered with the drive.	☐
Starting and checking the cooling system	
Fill up and bleed the internal cooling circuit. Start the cooling unit up. See *ACS880-107LC inverter units hardware manual* (3AXD50000196111 (English)) and *ACS880-1007LC liquid cooling unit user's manual* (3AXD50000129607 (English)).	☐
Check the cooling system for leaks. Make sure that cooling circuit joints at the shipping split joining cubicles are tight and that all drain valves have been closed.	☐
Make sure that the coolant can flow freely in all cubicles.	☐
Closing the cabinet doors	
Close all cabinet doors	☐
Connecting voltage to the drive and its auxiliary circuits	
Connect main AC voltage to the input terminals of the drive supply unit. (Close the main breaker of the supply transformer.)	☐
Close the main disconnecting device of the drive: Rack in the main breaker ([Q1], option +F255), or close the main switch/disconnector (option +F253).	☐
Close the auxiliary voltage switch [Q21] of the drive supply unit. **Do not** close the main circuit breaker ([Q1] option +F255) or the main contactor ([Q2], option +F250) of the drive supply unit yet!	☐
Energizing the drive and DC feeder unit - DC feeder unit without DC switch/disconnector ([Q11], no option +F290)	
WARNING! When you start the supply unit, the drive DC bus will be energized, as will all the units connected to the DC bus. If you want to prevent this for any of the units, open its DC switch/disconnector (if available), or remove its DC fuses. 1. Make sure that the energy storage disconnector is open. Indicator [P12] is on. 2. Start the drive supply unit and energize the drive: Use operating switch [S21] on the door of the drive incoming cubicle. See the supply unit hardware manual. 3. Make sure that the energy storage is charged and ready for the DC feeder unit connection. The voltage of the energy storage and the DC feeder unit must be on the same level to avoid inrush currents. 4. Close the energy storage disconnector. Indicator [P12] goes off. 5. Close the energy storage circuit breaker. The energy storage is connected to the drive DC link.	☐

Tasks	☑
Energizing the drive and DC feeder unit - DC feeder unit with DC switch/disconnector ([Q11], option +F290) and without charging switch ([Q10], no option +F272)	
WARNING! When you start the supply unit, the drive DC bus will be energized, as will all the units connected to the DC bus. If you want to prevent this for any of the units, open its DC switch/disconnector (if available), or remove its DC fuses. 1. Make sure that DC switch/disconnector [Q11] is open. Indicator [P13] is on. 2. Start the drive supply unit and energize the drive: Use operating switch [S21] on the door of the drive incoming cubicle. See the supply unit hardware manual. 3. Make sure that energy storage is ready for the connection to the drive. • Energy storage disconnector is open. Indicator [P12] is on. • Energy storage control system has released the DC switch/disconnector [Q11] interlocking. Indicator [P11] is on. • The voltage of the energy storage and the DC feeder unit are on the same level to avoid inrush currents. 4. Close the DC switch/disconnector [Q11]. Indicator [P13] goes off. 5. Close the energy storage disconnector. Indicator [P12] goes off. 6. Close the energy storage circuit breaker. The energy storage is connected to the drive DC link.	☐
Energizing the drive and DC feeder unit - DC feeder unit with DC switch/disconnector ([Q11], option +F290) and charging switch ([Q10] option +F272)	
WARNING! When you start the supply unit, the drive DC bus will be energized, as will all the units connected to the DC bus. If you want to prevent this for any of the units, open its DC switch/disconnector (if available), or remove its DC fuses. 1. Make sure that DC switch/disconnector [Q11] and charging switch [Q10] are open. Indicator [P13] is on. 2. Make sure that the energy storage disconnector is open. Indicator [P12] is on. 3. Start the drive supply unit and energize the drive. Use operating switch [S21] on the door of the drive incoming cubicle. See the supply unit hardware manual. 4. Close charging switch [Q10]. 5. Close the energy storage disconnector. Indicator [P12] goes off. 6. Close the energy storage circuit breaker. The charging starts. 7. Wait for the completion of the charging. See the documentation of the energy storage control system (customer-defined) for the indication. 8. After the charging is completed, open the energy storage circuit breaker and disconnector. • Indicator [P12] is on. • Energy storage control system releases the DC switch/disconnector [Q11] interlocking. Indicator [P11] is on. 9. Open charging switch [Q10]. 10. Make sure that: • Indicator [P12] is on. (Energy storage is disconnected.) • Indicator [P11] is on. (DC switch/disconnector [Q11] interlocking is not energized.) • Charging switch [Q10] is open. • The voltage of the energy storage and the DC feeder unit are on the same level to avoid inrush currents. 11. Close DC switch/disconnector [Q11]. Indicator [P13] goes off. 12. Close the energy storage disconnector. Indicator [P12] goes off. 13. Close the energy storage circuit breaker. The energy storage is charged and connected to the drive DC link.	☐

7

Operating instructions

Contents of this chapter

This chapter describes how to disconnect the energy storage from the drive DC link. It also refers to the instructions which describe how to connect the energy storage to the drive DC link. The instructions are valid for the DC feeder unit ACS880-7107LC.

Connecting the energy storage to the drive

Connecting the energy storage - DC feeder unit without DC switch/disconnector ([Q11], no option +F290)

See **Energizing the drive and DC feeder unit - DC feeder unit without DC switch/disconnector ([Q11], no option +F290)** (page 42).

Connecting the energy storage - DC feeder unit with the DC switch/disconnector ([Q11], option +F290) and without charging switch ([Q10], no option +F272)

See **Energizing the drive and DC feeder unit - DC feeder unit with DC switch/disconnector ([Q11], option +F290) and without charging switch ([Q10], no option +F272)** (page 43).

Connecting the energy storage - DC feeder unit with DC switch/disconnector ([Q11], option +F290), and charging switch ([Q10] option +F272)

See **Energizing the drive and DC feeder unit - DC feeder unit with DC switch/disconnector ([Q11], option +F290) and charging switch ([Q10] option +F272)** (page 43)).

Disconnecting the energy storage from the drive

Disconnecting the energy storage - DC feeder without DC switch/disconnector ([Q11], no option +F290)

1. Open the energy storage circuit breaker.
2. Open the energy storage disconnector. Indicator [P12] goes on.
3. If necessary, lock and tag the energy storage disconnector.

Disconnecting the energy storage - DC feeder unit with the DC switch/disconnector ([Q11], option +F290), and without charging switch ([Q10], no option +F272)

1. Open the energy storage circuit breaker.
2. Open the energy storage disconnector. Indicator [P12] goes on.
3. Make sure that you can open DC switch/disconnector [Q11]:
   - Energy storage disconnector is open. Indicator [P12] is on.
   - The energy storage control system has released the DC switch/disconnector [Q11] interlocking. Indicator [P11] is on.
4. Open the DC switch/disconnector [Q11]. Indicator [P13] goes on.
5. If necessary, lock and tag DC switch/disconnector [Q11] and the energy storage disconnector.

Disconnecting the energy storage - DC feeder unit with DC switch/disconnector ([Q11], option +F290) and charging switch ([Q10], option +F272)

1. Open the energy storage circuit breaker.
2. Open the energy storage disconnector. Indicator [P12] goes on.
3. Make sure that you can open DC switch/disconnector [Q11]:
   - Energy storage disconnector is open. Indicator [P12] is on.
   - The energy storage control system has released the DC switch/disconnector [Q11] interlocking. Indicator [P11] is on.
4. Open DC switch/disconnector [Q11]. Make sure that also the charging switch [Q10] is open. Indicator [P13] goes on.
5. If necessary, lock and tag DC switch/disconnector [Q11], charging switch [Q10] and the energy storage disconnector.

8

Fault tracing

Contents of this chapter

This chapter presents the indicator lamps on the DC feeder unit door.

Indicator lamps on cabinet door

Desig.	Name	Description (when illuminated)
P11	Interlocking released	DC switch/disconnector ([Q11], option +F290) is released.
P12	ESS disconnected	Energy storage disconnector is open.
P13	DC feeder disconnected	The DC switch/disconnector ([Q11], option +F290) is disconnected and the charging switch ([Q10], option +F272) is disconnected.

9

Maintenance

Contents of this chapter

This chapter specifies the user maintenance tasks and intervals. It also contains the instructions for the user maintenance tasks.

Maintenance intervals

The tables below show the maintenance tasks which can be done by the end user. For ABB Service offering, refer to www.abb.com/drivesservices or consult your local ABB Service representative (www.abb.com/searchchannels).

Description of symbols

Action	Description
I	Inspection (visual inspection and maintenance action if needed)
P	Performance of on/off-site work (commissioning, tests, measurements or other work)
R	Replacement

Recommended maintenance intervals after start-up

Recommended annual actions by the user	
Connections and environment	
Quality of supply voltage	**P**
Spare parts	
Spare parts	**I**
Inspections by user	
Tightness of terminals	I

Recommended annual actions by the user	
Dustiness, corrosion and temperature	I
Cooling liquid pipe connections	I
Coolant antifreeze concentration	P

Recommended every 2nd year actions by the user	
Inspection of coolant quality	P

	Years from start-up						
	3	**6**	**9**	**12**	**15**	**18**	**21**
Coolant							
Coolant draining and refill		R		R		R	
Cabinet fans and fan control board							
Cooling fans 230 VAC 50/60Hz			R			R	
Cooling fans 115 VAC 50/60Hz		R		R		R	
Common							
BSFC Cabinet side charging control board				R			
Aging							
Cabinet auxiliary power supplies				R			
Buffer module 24VDC +F276 Ride through function		R		R		R	

Note:

- Maintenance and component replacement intervals are based on the assumption that the equipment is operated within the specified ratings and ambient conditions. ABB recommends annual drive inspections to ensure the highest reliability and optimum performance.
- Long term operation near the specified maximum ratings or ambient conditions may require shorter maintenance intervals for certain components. Consult your local ABB Service representative for additional maintenance recommendations.

Cabinet

Cleaning the exterior of the drive

WARNING!
Obey the safety instructions of the drive. If you ignore them, injury or death, or damage to the equipment can occur. If you are not a qualified electrical professional, do not do installation, commissioning or maintenance work.

1. Stop the drive and do the steps in section Electrical safety precautions (page 27) before you start the work.
2. Clean the exterior of the drive. Use:

- vacuum cleaner with an antistatic hose and nozzle
- soft brush
- dry or damp (not wet) cleaning cloth. Moisten with clean water, or mild detergent (pH 5…9 for metal, pH 5…7 for plastic).

WARNING!
Prevent water from entering the drive. Never use excessive amount of water, a hose, steam, etc.

Fans

Replacing the cooling fan of the heat exchanger

WARNING!
Obey the safety instructions of the drive. If you ignore them, injury or death, or damage to the equipment can occur. If you are not a qualified electrical professional, do not do installation, commissioning or maintenance work.

WARNING!
Use the required personal protective equipment. Wear protective gloves and long sleeves. Some parts have sharp edges.

1. Stop the drive and do the steps in section Electrical safety precautions (page 27) before you start the work.
2. Undo the fastening screws (2 × M6) and open the swing-out frame.

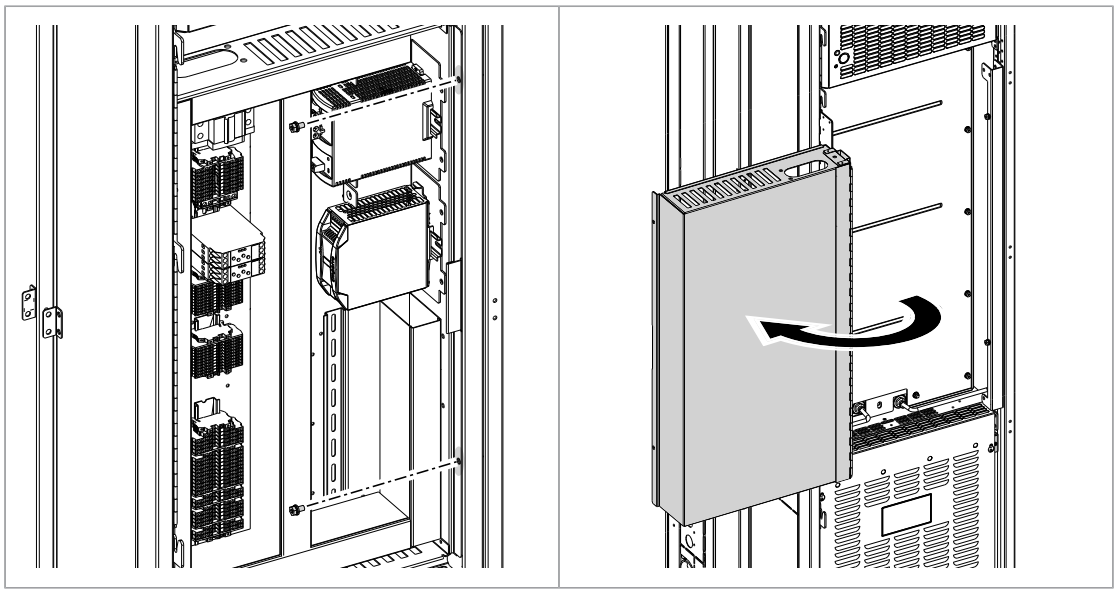

3. Remove the shrouding in front of the fan.

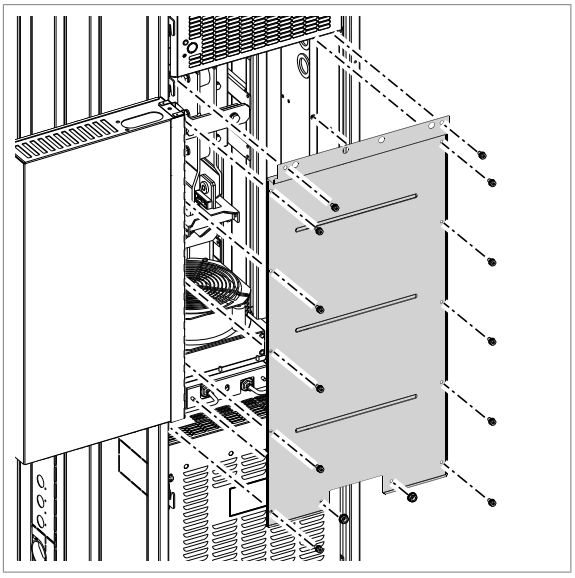

4. Disconnect the fan wiring.
5. Undo the fastening screws, and pull the fan housing up and out.

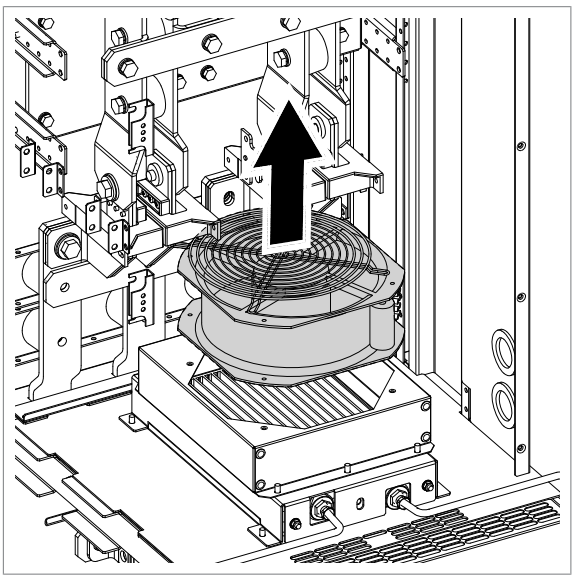

6. Install a new fan in reverse order to the above.

10

Internal cooling circuit

See *ACS880-107LC inverter units hardware manual* (3AXD50000196111 (English)).

11

Technical data

Contents of this chapter

This chapter contains the technical data for the DC feeder unit ACS880-7107LC.

Electrical ratings

ACS880-7107LC-...	Frame size	No. of strings	Nominal ratings	
			I_1	I_n
			A (DC)	A (DC)
0350A-7	1×ST	1	350	350
0550A-7	1×ST	1	550	550
0750A-7	1×ST	1	750	750
0950A-7	1×ST	1	950	950
1100A-7	2×ST	2	550	1100
1500A-7	2×ST	2	750	1500
1900A-7	2×ST	2	950	1900
1650A-7	3×ST	3	550	1650
2250A-7	3×ST	3	750	2250
2850A-7	3×ST	3	950	2850

I_1 Nominal current per DC feeder unit string

I_n Nominal current of the DC feeder unit (sum of the DC feeder unit string currents)

Derating

Surrounding air temperature derating

In the temperature range +45…55 °C (+113…131 °F), the rated output current is derated by 0.5 percentage points for every added 1 °C (1.8 °F). The output current can be calculated by multiplying the current given in the rating table by the derating factor *(k)*:

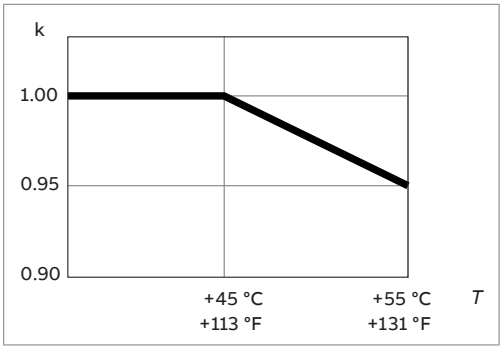

Coolant temperature derating

See *ACS880-107LC inverter units hardware manual* (3AXD50000196111 (English)).

Fuses

ACS880-7107LC-…	DC fuses				
	Qty	A	V	Manufacturer	Type
0350A-7	2	500	1250	Bussmann	170M6542
0550A-7	2	800	1250	Bussmann	170M6546
0750A-7	2	1100	1000	Bussmann	170M6549
0950A-7	2	1400	1100	Bussmann	170M6501
1100A-7	4	800	1250	Bussmann	170M6546
1500A-7	4	1100	1000	Bussmann	170M6549
1900A-7	4	1400	1100	Bussmann	170M6501
1650A-7	6	800	1250	Bussmann	170M6546
2250A-7	6	1100	1000	Bussmann	170M6549
2850A-7	6	1400	1100	Bussmann	170M6501

Dimensions and weights

ACS880-7107LC-...	Height	Width	Depth	Weight
	mm	mm	mm	kg
0350A-7	2002	400	644	250
0550A-7	2002	400	644	250
0750A-7	2002	400	644	250
0950A-7	2002	400	644	250
1100A-7	2002	500	644	320
1500A-7	2002	500	644	320
1900A-7	2002	500	644	320
1650A-7	2002	700	644	435
2250A-7	2002	700	644	435
2850A-7	2002	700	644	435

Free space requirements

The values are as required by cooling, maintenance and/or operation of the pressure relief (if present). Also obey the general mechanical installation instructions.

Front		Sides		Above	
mm	in.	mm	in.	mm	in.
1000	39	0	0	250	9.85

Losses, internal cooling circuit data and noise

ACS880-7107LC-...	Losses			Liquid quantity			Noise level
	P_{loss} total	$P_{loss\ coolant}$	$P_{loss\ air}$	Total	Mass flow	Pressure loss	Average
	kW	kW	kW	l	l/min	kPa	dB(A)
0350A-7	0.03	0.02	0.01	2.6	7.2	120.0	63
0550A-7	0.2	0.1	0.1	2.6	7.2	120.0	63
0750A-7	0.6	0.4	0.2	2.6	7.2	120.0	63
0950A-7	0.9	0.6	0.3	2.6	7.2	120.0	63
1100A-7	0.6	0.4	0.2	3.4	7.2	120.0	63
1500A-7	1.1	0.8	0.4	3.4	7.2	120.0	63
1900A-7	1.8	1.2	0.6	3.4	7.2	120.0	63
1650A-7	0.9	0.6	0.3	7.0	13.6	120.0	66
2250A-7	1.7	1.1	0.6	7.0	13.6	120.0	66
2850A-7	2.7	1.8	0.9	7.0	13.6	120.0	66

Terminal and cable entry data for the power cables

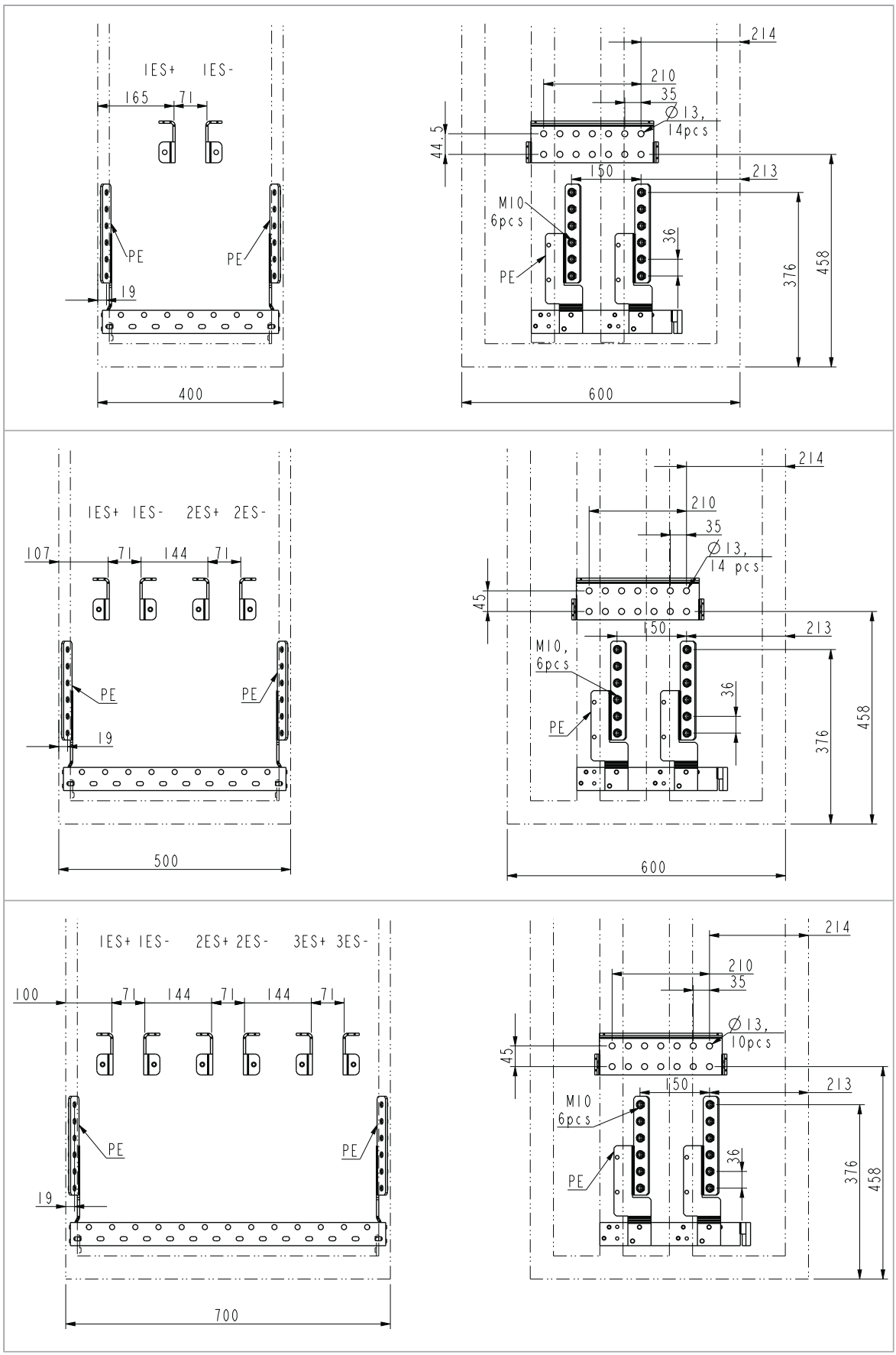

Tightening torques

Unless a tightening torque is specified in the text, the following torques can be used.

Electrical connections

Size	Torque	Strength class
M3	0.5 N·m (4.4 lbf·in)	4.6...8.8
M4	1 N·m (9 lbf·in)	4.6...8.8
M5	4 N·m (35 lbf·in)	8.8
M6	9 N·m (6.6 lbf·ft)	8.8
M8	22 N·m (16 lbf·ft)	8.8
M10	42 N·m (31 lbf·ft)	8.8
M12	70 N·m (52 lbf·ft)	8.8
M16	120 N·m (90 lbf·ft)	8.8

Mechanical connections

Size	Max. torque	Strength class
M5	6 N·m (53 lbf·in)	8.8
M6	10 N·m (7.4 lbf·ft)	8.8
M8	24 N·m (17.7 lbf·ft)	8.8

Insulation supports

Size	Max. torque	Strength class
M6	5 N·m (44 lbf·in)	8.8
M8	9 N·m (6.6 lbf·ft)	8.8
M10	18 N·m (13.3 lbf·ft)	8.8
M12	31 N·m (23 lbf·ft)	8.8

Cable lugs

Size	Max. torque	Strength class
M8	15 N·m (11 lbf·ft)	8.8 (A2-70 or A4-70)
M10	32 N·m (23.5 lbf·ft)	8.8
M12	50 N·m (37 lbf·ft)	8.8

Typical power cables

Example cable types in marine applications:

- Prysmian TEMA PHFX-A (LSM-HF)
- Nexans MPRXCX flexship.

These example cables are very flexible: stranded wire copper conductors and XLPE insulation allowing max. 90 °C conductor temperature.

Typical installation on cable tray, with overall de-rating factor of 0.7.

Cross sections are typically 4×95 mm², 4×120 mm² or 4×150 mm².

Terminal [X350] data for the control cables

Terminal type: Spring-cage connection

Conductor stripping length: 8…10 mm

Conductor max. size: 4 mm² (solid), 2.5 mm² (stranded)

Conductor min. size: 0.08 mm² (solid), 0.08 mm² (stranded, no ferrule), 0.14 mm² (stranded, with ferrule)

DC connection data

Nominal voltage: 976 V DC, Maximum voltage: 976 V DC + 10% (1074 V DC)

Short circuit current ratings

Summary short circuit peak currents of parallel connected strings (frame sizes 2×ST and 3×ST) shall not exceed 150 kA.

∑ip < 150kA

Default version:

- 1×ST: ip < 150 kA short circuit peak for tp <2 ms with t0 = 0
- 2×ST: ip < 80 kA short circuit peak for tp <2 ms with t0 = 0
- 3×ST: ip < 80 kA short circuit peak for tp <2 ms with t0 = 0

Version with common mode filters (option +E208)

- 1×ST: ip < 60 kA short circuit peak for tp <2 ms with t0 = 0
  ip < 80 kA short circuit peak for tp <0,25 ms with t0 = 0
- 2×ST: ip < 60 kA short circuit peak for tp <2 ms with t0 = 0
  ip < 80 kA short circuit peak for tp <0,25 ms with t0 = 0
- 3×ST: ip < 60 kA short circuit peak for tp <2 ms with t0 = 0
  ip < 80 kA short circuit peak for tp <0,25 ms with t0 = 0

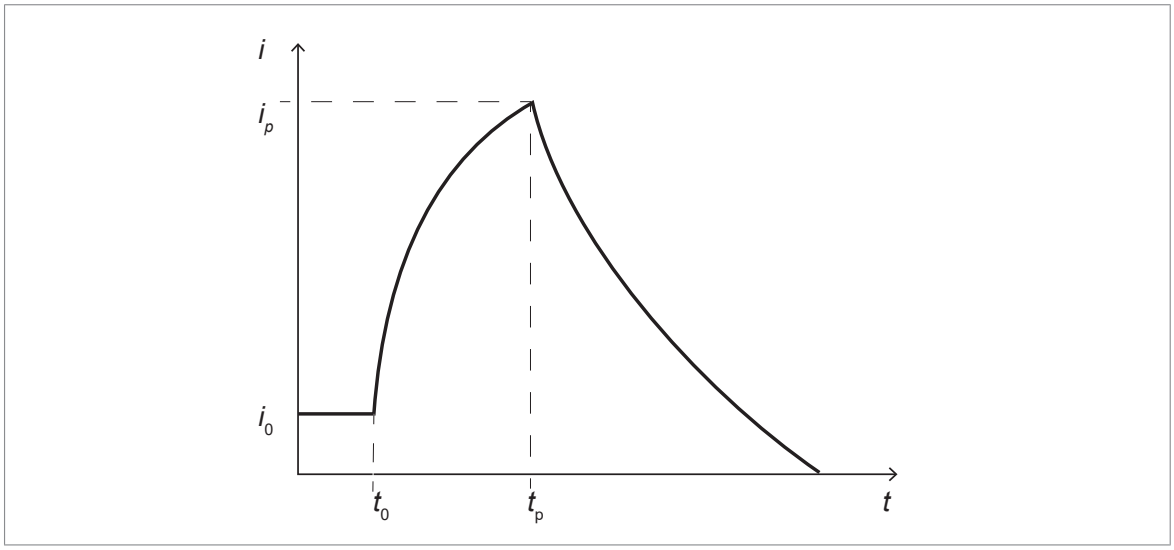

i0 = initial load current before failure, t0 = start of failure

Auxiliary circuit current consumption

Auxiliary circuit current consumption varies depending on the actual drive configuration and options. Contact ABB for the delivery-specific value.

Energy efficiency data (ecodesign)

Energy efficiency data is not provided for the drive/unit. Multidrives and multidrive modules are not in the scope of the EU ecodesign requirements (Regulation EU/2019/1781) or the UK ecodesign requirements (Regulation SI 2021 No. 745).

Protection classes

Degrees of protection (IEC/EN 60529)	IP42 (standard), IP54 (option +B055)
Enclosure types (UL50)	UL Type 1 (standard), UL Type 12 (option +B055). For indoor use only.
Arcing class (IEC TR 61641)	B – ASSEMBLY providing personnel and ASSEMBLY protection under arcing conditions. Tested at the following voltage with an arcing current of 65 kA for 300 milliseconds: • 400 V units (indicated by "-3" in drive type): 420 V • 500 V units (indicated by "-5" in drive type): 550 V • 690 V units (indicated by "-7" in drive type): 760 V
Overvoltage category (IEC/EN 60664-1)	III, except for auxiliary power connections (fan, control, heating, lighting, cooling unit pump etc) which are category II.
Protective class (IEC/EN 61800-5-1)	I

Ambient conditions

Environmental limits for the drive are given below. The drive is to be used in a heated, indoor, controlled environment.

	Operation installed for stationary use	**Storage in the protective package**	**Transportation in the protective package**
Installation site altitude	0…2000 m (0…6562 ft) above sea level. For altitudes over 2000 m, contact ABB. Output derated above 1000 m (3281 ft).	-	-
Air temperature	0 … +45 °C (+32 … +113 °F), no condensation allowed. Output derated in the range +45 … +55 °C (+113 … +131 °F).	-40 … +70 °C (-40 … +158 °F)	-40 … +70 °C (-40 … +158 °F)
Relative humidity	Max. 95%	Max. 95%	Max. 95%
	No condensation allowed. Maximum allowed relative humidity is 60% in the presence of corrosive gases.		

	Operation installed for stationary use	Storage in the protective package	Transportation in the protective package
Contamination	IEC/EN 60721-3-3:2002 Chemical gases: Class 3C2 Solid particles: Class 3S2. No conductive dust allowed.	IEC 60721-3-1:1997 Chemical gases: Class 1C2 Solid particles: Class 1S3 (packing must support this, otherwise 1S2)	IEC 60721-3-2:1997 Chemical gases: Class 2C2 Solid particles: Class 2S2
Pollution degree IEC/EN 60664-1	2		
Vibration IEC/EN 61800-5-1 IEC 60068-2-6:2007, EN 60068-2-6:2008	IEC/EN 60721-3-3:2002 10…57 Hz: max. 0.075 mm amplitude 57…150 Hz: 1 *g* Units with marine construction (option +C121): Max. 1 mm (0.04 in) (5 … 13.2 Hz), max. 0.7 *g* (13.2 … 100 Hz) sinusoidal	IEC/EN 60721-3-1:1997 10…57 Hz: max. 0.075 mm amplitude 57…150 Hz: 1 *g*	IEC/EN 60721-3-2:1997 2…9 Hz: max. 3.5 mm amplitude 9…200 Hz: 10 m/s^2 (32.8 ft/s^2)
Shock IEC 60068-2-27:2008, EN 60068-2-27:2009	Not allowed	With packing max. 100 m/s^2 (328 ft/s^2) 11 ms	With packing max. 100 m/s^2 (328 ft/s^2) 11 ms

Materials

See *ACS880 cabinet-installed drives recycling instructions and environmental information* (3AXD50000153909 [English]).

Color

RAL 7035 and RAL 9017.

Package

Standard package (Container package) Vertical	**Materials:** Wood, PE (VCI film), VCI emitter, clay desiccant, PET strap, metal fixing clamps and screws, packing tape. **Transport method:** Road and air transport and sea transport in container. **Storage conditions (IEC 60721-3-1):** 1K20: Up to 24 months in enclosed conditions (full temperature and humidity control). 1K22: Up to 6 months in enclosed conditions (no temperature or humidity control). 1K23, 1K24: Up to 3 months in sheltered conditions (roof providing protection from direct rain and sun). 1K25…1K27: Up to 48 hours between loading operations in open-air conditions (no protection).

Seaworthy package (option +P912) Vertical	**Materials:** Wood, plywood, PE (VCI film), VCI emitter, clay desiccant, metal fixing clamps and screws, packing tape. **Transport method:** Road and air transport and sea transport in container or deck. **Storage conditions (IEC 60721-3-1):** 1K20: Up to 24 months in enclosed conditions (full temperature and humidity control). 1K22: Up to 12 months in enclosed conditions (no temperature or humidity control). 1K23, 1K24: Up to 12 months in sheltered conditions (roof providing protection from direct rain and sun). 1K25…1K27: Up to 1 month in open-air conditions (no protection). Not recommended, but can be temporarily allowed.

Disposal

The main parts of the drive can be recycled to preserve natural resources and energy. Product parts and materials should be dismantled and separated.

Generally all metals, such as steel, aluminum, copper and its alloys, and precious metals can be recycled as material. Plastics, rubber, cardboard and other packaging material can be used in energy recovery.

Printed circuit boards and DC capacitors need selective treatment according to IEC 62635 guidelines.

To aid recycling, most plastic parts are marked with an appropriate identification code. In addition, components containing substances of very high concern (SVHCs) are listed in European Chemicals Agency's SCIP database. SCIP is the database for information on Substances of Concern In articles as such or in complex objects (Products) established under the Waste Framework Directive (2008/98/EC). For further information, contact your local ABB distributor or consult European Chemicals Agency's SCIP database to find out which SVHCs are used in the drive, and to find out where those components are located.

Contact your local ABB distributor for further information on environmental aspects. End of life treatment must follow international and national regulations.

For more information on ABB end of life services, see new.abb.com/service/end-of-lifeservices.

Applicable standards

See *ACS880 liquid-cooled multidrive cabinets and modules electrical planning (3AXD50000048634 [English])*.

Markings

See *ACS880 liquid-cooled multidrive cabinets and modules electrical planning (3AXD50000048634 [English])*.

Disclaimers

Generic disclaimer

The manufacturer shall have no obligation with respect to any product which (i) has been improperly repaired or altered; (ii) has been subjected to misuse, negligence or accident; (iii) has been used in a manner contrary to the manufacturer’s instructions; or (iv) has failed as a result of ordinary wear and tear.

Cyber security disclaimer

This product is designed to be connected to and to communicate information and data via a network interface. It is Customer's sole responsibility to provide and continuously ensure a secure connection between the product and Customer network or any other network (as the case may be). Customer shall establish and maintain any appropriate measures (such as but not limited to the installation of firewalls, application of authentication measures, encryption of data, installation of anti-virus programs, etc.) to protect the product, the network, its system and the interface against any kind of security breaches, unauthorized access, interference, intrusion, leakage and/or theft of data or information.

ABB and its affiliates are not liable for damages and/or losses related to such security breaches, any unauthorized access, interference, intrusion, leakage and/or theft of data or information.

Further information

Product and service inquiries

Address any inquiries about the product to your local ABB representative, quoting the type designation and serial number of the unit in question. A listing of ABB sales, support and service contacts can be found by navigating to www.abb.com/searchchannels.

Product training

For information on ABB product training, navigate to new.abb.com/service/training.

Providing feedback on ABB manuals

Your comments on our manuals are welcome. Navigate to new.abb.com/drives/manuals-feedback-form.

Document library on the Internet

You can find manuals and other product documents in PDF format on the Internet at www.abb.com/drives/documents.

a317 (working)
PDF-A4
Created: 2023-10-18, 08:38:04

www.abb.com/drives

3AXD50000752423C

3AXD50000752423 Rev C (EN) 2023-08-22