ABB MACHINERY DRIVES

ACS260-04 Component Drive

User’s manual

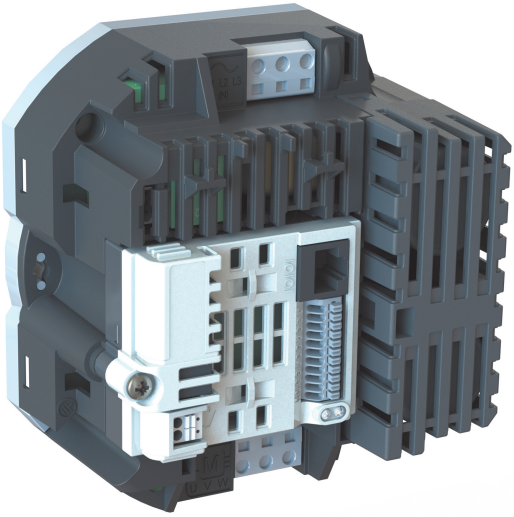

ACS260 Component Drive

User's Manual

Table of contents

1. Safety

3. Mechanical installation

4. Electrical installation

5. Start-up

© 2021 ABB Beijing Drive Systems Company Ltd.

3AXD50000672080 Rev B
EN
EFFECTIVE: 2021-07-16

Table of contents

1. Safety

Contents of this chapter 9
Use of warning symbols 9
Safety in installation and maintenance 10
Electricity safety 10
General safety 10
Safety in start-up and operation 11

2. Introduction to the manual

Contents of this chapter 15
Type designation key 15
Cybersecurity disclaimer 16

3. Mechanical installation

Contents of this chapter 17
General 17
Mechanical Dimensions and Mounting 18
Frame size R1 18
Frame size R2 19
Heatsink Capacity Calculation 20
Maximum Permissible Heatsink Temperature 20
Typical Heatsink Requirement 21
Three Phase Input 380 – 480VAC Supply Models 21

4. Electrical installation

Contents of this chapter 23
Power Connection Diagram 24
Protective Earth (PE) Connection 25
Grounding Guidelines 25
Protective Earth Conductor 25
PE Connection 25
Safety Ground 26
Motor Ground 26
Ground Fault Monitoring 27
Shield Termination (Cable Screen) 27
Incoming Power Connection 27
General 27
Cable Selection 27
Fuse / Circuit Breaker Selection 28
Motor Connection 28
Motor Terminal Box Connections 29
EMC Compliant Installation 29

Conducted Emissions According to EN61800-3 29
Radiated Emissions According to EN61800-3 30

5. Start-up

Motor Control Selection (Advanced Parameter Mode) 31
Operating Mode Selection 32
Quick Start-up Terminal Control 32
Quick Start-up Keypad Control 33
Drive Operating Displays 33
Drive Operating Displays 34

6. Application Macros

Overview of macros 35
Quick Start-up Terminal Control 36
Terminal Mode 1103 PRIMARY COMMAND SOURCE MODE = 0 36
Keypad Mode 1103 PRIMARY COMMAND SOURCE MODE = 1 or 2 39
Modbus Control Mode 1103 PRIMARY COMMAND SOURCE MODE = 4 40
PI Mode 1103 PRIMARY COMMAND SOURCE MODE = 5b 40

7. Parameters

Parameter Structure 43
Group Navigation 44
Parameter Structure table 44
PAR-A Parameter list 45
Parameters in the Short parameter mode 46
Parameters in the Long parameter mode 49
Read Only Status parameters 60
Parameter access locking/unlocking system 62
Relevant Parameters 62
Locking Parameter Access 62
Unlocking Parameter Access 62
Terminal Configuration Options 63
Terminal Mode: (1103 = 0) 63
Keypad Mode: (1103 = 1 or 2) 65
Modbus control mode: (1103 = 3, 4, 7, 8) 66
User PI control mode: (1103 = 5 or 6) 67

8. Fault tracing

What this chapter contains 69
Fault Code Messages 70

9. Serial Communications

What this chapter contains 73
Modbus RTU Communications Introduction 73
RJ45 Connector Configuration 73
Modbus Telegram Structure 74
RJ45 Data Connection Pin Configuration 75

Modbus Register Map 75
Control and status registers 75
Control and Status Register Descriptions 76
Read-Write Registers 76
Parameter Registers and Scaling 78
Additional Information 80
DC Injection Configuration 80
Communications Configuration 80
Modbus Exception Response Telegrams 81
Dataflow Example 82

10. Technical Data

Environmental 83
Digital & Analog I/O 85
Digital Inputs Specification 85
Analog Inputs Specification 85
Analog Output Specification 85
Relay Output 85
Mechanical 85
Vibration 85
Response Times 86
Motor Control Performance 86
V/F Mode 86
Vector Mode 86
Under / Over Voltage Trip Levels 86
Automatic Switching Frequency Reduction 86
Output Frequency based Effective Switching Frequency Reduction 86
Output Current Based Effective Switching Frequency Reduction 87
Rating table 88
Efficiency 89
Routine Maintenance 89
Applicable Standards 90

11. Options and Kits

Overview 91
Remote Keypad RCRP-02 91
General Specifications 92
COPYSTICK2 92
USB PC Connection Kit ECS100U 93

Further information

Product and service inquiries 95
Product training 95
Providing feedback on ABB Drives manuals 95
Document library on the Internet 95

1

Safety

Contents of this chapter

This chapter contains the safety instructions which you must follow when installing, operating and servicing the drive. If ignored, physical injury or death may follow, or damage may occur to the drive, motor or driven equipment. Read the safety instructions before you work on the unit.

Use of warning symbols

Warnings caution you about conditions which can result in serious injury or death and/or damage to the equipment and advice on how to avoid the danger. The following warning symbols are used in this manual:

WARNING! Electricity warning warns of hazards from electricity which can cause physical injury and/or damage to the equipment.

WARNING! General danger warns about conditions, other than those caused by electricity, which can result in physical injury and/or damage to the equipment.

Safety in installation and maintenance

These warnings are intended for all who work on the drive, motor cable or motor.

Electricity safety

WARNING! Ignoring the instructions can cause physical injury or death, or damage to the equipment. **Only qualified electricians are allowed to install and maintain the drive!**

- Never work on the drive, motor cable or motor when input power is applied. After disconnecting the input power, always wait for 10 minutes to let the intermediate circuit capacitors discharge before you start working on the drive, motor or motor cable.

  Always ensure by measuring with a multimeter (impedance at least 1 Mohm) that:
  - There is no voltage between the drive input phases L1, L2 and L3 and the ground.
  - There is no voltage between terminals + and BR and the ground.
- Do not work on the control cables when power is applied to the drive or to the external control circuits. Externally supplied control circuits may carry dangerous voltage even when the input power of the drive is switched off.
- Do not make any insulation or voltage withstand tests on the drive.
- Be sure the system is properly grounded before applying power. Do not apply AC power before you ensure that all grounding instructions have been followed. Electrical shock can cause serious or fatal injury.

Note:

Even when the motor is stopped, dangerous voltage is present at the power circuit terminals L1, L2, L3 and U, V, W and + and BR.

General safety

WARNING! Ignoring the following instructions can cause physical injury or death, or damage to the equipment.

- The drive is not field repairable. Never attempt to repair a malfunctioning drive; contact your local ABB representative or Authorized Service Centre for replacement.
- Make sure that dust from drilling does not enter the drive during the installation. Electrically conductive dust inside the drive may cause damage or lead to malfunction.
- Ensure sufficient cooling.

Safety in start-up and operation

These warnings are intended for all who plan the operation, start up or operate the drive.

WARNING! Ignoring the following instructions can cause physical injury or death, or damage to the equipment.

- Before adjusting the drive and putting it into service, make sure that the motor and all driven equipment are suitable for operation throughout the speed range provided by the drive. The drive can be adjusted to operate the motor at speeds above and below the speed provided by connecting the motor directly to the power line.
- Do not activate automatic fault reset functions if dangerous situations can occur. When activated, these functions reset the drive and resume operation after a fault.
- Do not control the motor with an AC contactor or disconnecting device (disconnecting means); use instead the control panel start and stop keys and or external commands (I/O). The maximum allowed number of charging cycles of the DC capacitors (that is, power-ups by applying power) is two per minute.

Note:

When parameter *1103 PRIMARY COMMAND SOURCE MODE* is not set to 1 or 2, the stop key on the control panel will not stop the drive. To stop the drive open terminal 2 of the drive control terminals.

	Danger: Indicates a risk of electric shock, which, if not avoided, could result in damage to the equipment and possible injury or death.		Danger: Indicates a potentially hazardous situation other than electrical, which if not avoided, could result in damage to property.
	The ACS260 variable speed drive is intended for professional installation and commissioning into complete equipment or systems as part of a fixed installation. If installed incorrectly it may present a safety hazard. The *ACS260* uses high voltages and currents, carries a high level of stored electrical energy, and is used to control mechanical plant that may cause injury. Close attention is required to system design and electrical installation to avoid hazards in either normal operation or in the event of equipment malfunction. Only qualified electricians are allowed to install and maintain this product.		
	System design, installation, commissioning and maintenance must be carried out only by personnel who have the necessary training and experience. They must carefully read this safety information and the instructions in this Guide and follow all information regarding transport, storage, installation and use of the *ACS260*, including the specified environmental limitations.		

	Do not perform any flash test or voltage withstand test on the *ACS260*. Any electrical measurements required should be carried out with the *ACS260* disconnected.
	Electric shock hazard! Disconnect and ISOLATE the *ACS260* before attempting any work on it. High voltages are present at the terminals and within the drive for up to 10 minutes after disconnection of the electrical supply. Always ensure by using a suitable multimeter that no voltage is present on any drive power terminals prior to commencing any work.
	Where supply to the drive is through a plug and socket connector, do not disconnect until 10 minutes have elapsed after turning off the supply.
	Ensure correct grounding connections. The ground cable must be sufficient to carry the maximum supply fault current which normally will be limited by the fuses. Suitably rated fuses should be fitted in the mains supply to the drive, according to any local legislation or codes.
	Do not carry out any work on the drive control cables when power is applied to the drive or to the external control circuits.

	Within the European Union, all machinery in which this product is used must comply with the Machinery Directive 2006/42/EC, Safety of Machinery. In particular, the machine manufacturer is responsible for providing a main switch and ensuring the electrical equipment complies with EN60204-1.
	The level of integrity offered by the *ACS260* control input functions – for example stop/start, forward/reverse and maximum speed is not sufficient for use in safety-critical applications without independent channels of protection. All applications where malfunction could cause injury or loss of life must be subject to a risk assessment and further protection provided where needed.
	The driven motor can start at power up if the enable input signal is present.
	The STOP function does not remove potentially lethal high voltages. ISOLATE the drive and wait 10 minutes before starting any work on it. Never carry out any work on the Drive, Motor or Motor cable when the input power is still applied.
	The *ACS260* can be programmed to operate the driven motor at speeds above or below the speed achieved when connecting the motor directly to the mains supply. Obtain confirmation from the manufacturers of the motor and the driven machine about suitability for operation over the intended speed range prior to machine start up.
	Do not activate the automatic fault reset function on any systems whereby this may cause a potentially dangerous situation.
	The *ACS260* has an Ingress Protection rating of IP20. IP20 units must be installed in a suitable enclosure.
	*ACS260*s are intended for indoor use only.

	When mounting the drive, ensure that sufficient cooling is provided. Do not carry out drilling operations with the drive in place, dust and metal shavings from drilling may lead to damage.
	The entry of conductive or flammable foreign bodies should be prevented. Flammable material should not be placed close to the drive
	Relative humidity must be less than 95% (non-condensing).
	Ensure that the supply voltage, frequency and number of phases correspond to the rating of the *ACS260* as delivered.
	Never connect the mains power supply to the Output terminals U, V, W.
	Do not install any type of automatic switchgear between the drive and the motor.
	Wherever control cabling is close to power cabling, maintain a minimum separation of 4 in. (100 mm) and arrange crossings at 90 degrees Ensure that all terminals are tightened to the appropriate torque setting.
	Do not attempt to carry out any repair of the drive. In the case of suspected fault or malfunction, contact your local ABB representative for further assistance.

2

Introduction to the manual

Contents of this chapter

This chapter contains information about the ACS260 including how to identify the drive.

Type designation key

The type designation contains information on the specification and configuration of the drive. You find the type designation label attached to the drive. The first digits from the left express the basic configuration, for example ACS260-04-02A2-4.

The explanations of the type designation label selections are described below.

Sample type code: ACS260-04-02A2-4.

Segment		**A**		**B**		**C**
ACS260	-	04	-	02A2	-	4

	Code	**Description**
A	Construction	04 = Module
B	Current rating	For example, 02A2 refers to a nominal output current of 2.2 A.
C	Voltage rating	4 = 3-phase 380...480 V

Cybersecurity disclaimer

This product is designed to be connected to and to communicate information and data via a network interface. It is Customer's sole responsibility to provide and continuously ensure a secure connection between the product and Customer network or any other network (as the case may be). Customer shall establish and maintain any appropriate measures (such as but not limited to the installation of firewalls, application of authentication measures, encryption of data, installation of anti-virus programs, etc) to protect the product, the network, its system and the interface against any kind of security breaches, unauthorized access, interference, intrusion, leakage and/or theft of data or information. ABB and its affiliates are not liable for damages and/or losses related to such security breaches, any unauthorized access, interference, intrusion, leakage and/or theft of data or information.
See also section *Locking Parameter Access* (page *62*).

3

Mechanical installation

Contents of this chapter

The chapter describes the mechanical installation procedure of the drive.

General

WARNING! ACS260 units may become damaged if operated without a suitable heatsink. Do not operate the unit without providing suitable heatsink capacity for the drive and application requirement.

- ACS260 Power Modules must be mounted onto a suitable flat metallic surface with sufficiently low thermal resistance to allow dissipation of the heat produced.
- Surface flatness must be =<+ / - 0.2mm over the mounting area.
- The chosen mounting location must ensure the unit is not subject to vibration levels in excess of the limits specified in section *Vibration*.
- Units should be mounted only using the integral mounting holes.
- The ACS260 must be installed in a pollution degree 1 or 2 environment only.
- Ensure that the ambient air temperature range around the unit during operation does not exceed the permissible limits given in *Environmental*.
- Do not mount flammable material close to the ACS260.
- Units may be mounted in any orientation.

Mechanical Dimensions and Mounting

Frame size R1

Overall Dimensions

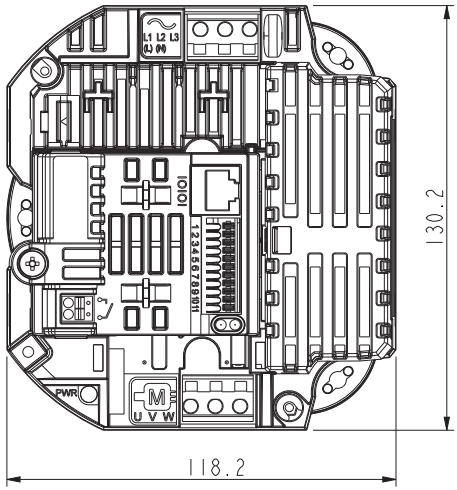

Depth:
74mm,
Weight:
0.7kg, 1.54lb

Mounting Points

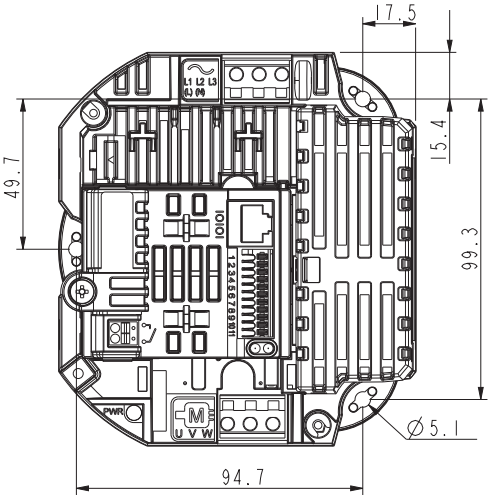

Use 3 x M4 (No. 8) bolts or screws,

tightening torque: 4Nm / 3ft-lb

Frame size R2

Overall Dimensions

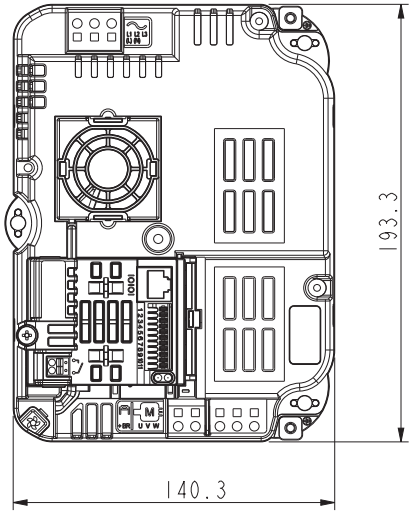

Depth:
89mm,
Weight:
1.3kg, 2.87lb

Mounting Points

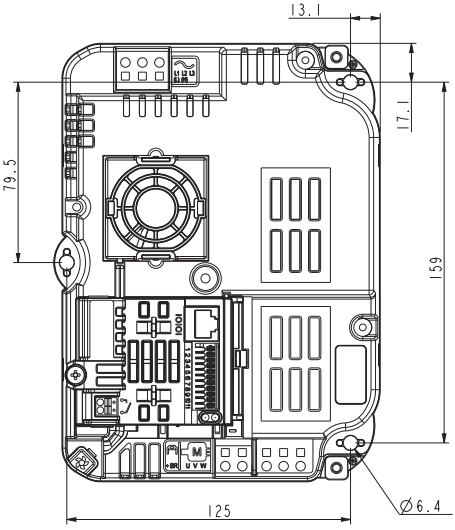

Use 3 x M4 (No. 8) bolts or screws, tightening torque: 4Nm / 3ft-lb

tightening torque: 4Nm / 3ft-lb

Heatsink Capacity Calculation

ACS260 Units are designed to be mounted to a metallic, heat conducting surface in order to maintain the unit operating temperature. Thermostrate or heatsink compound must be added to ensure optimal heat transfer and minimum thermal resistance.

In order to calculate the necessary heatsink requirement, the following formula can be used. Example values based on typical conditions are given in the table below.

- Determine the maximum ambient air temperature around the heatsink, T_{AMB}
- Select the desired PWM operating frequency from the available options in Parameter 2606.
- From the table below, determine the maximum permissible heatsink temperature, T_{MAX}
- Determine the maximum allowed Temperature Rise
  - $T_{RISE} = T_{MAX} - T_{AMB}$
- Calculate the motor absorbed electrical power, P_{MOT}, based on the motor rated voltage, current and efficiency
  - $P_{MOT} = \sqrt{3} * \text{Rated Voltage} * \text{Rated Current} * \text{Power Factor} * \text{Efficiency}$
- Calculate the losses in the drive, P_{LOSS}, based on the required motor power
  - $P_{LOSS} = P_{MOT} * (1 - \text{Drive Efficiency})$
  - Typical drive efficiency values are shown in the table below for each available effective switching frequency
- Calculate the required heatsink maximum thermal resistance R_{MAX}
  - $R_{MAX} = T_{RISE} / P_{LOSS}$

Maximum Permissible Heatsink Temperature

The maximum permissible heatsink temperature allowed for the ACS260 drive is linked to the desired effective switching frequency selected by parameter 2606. In order to maintain operation at a certain switching frequency, the heatsink temperature must be maintained below the threshold level shown in the table below. If the temperature exceeds the threshold, the switching frequency will automatically reduce.

Temperature Threshold	Action
65°C	Auto reduce from 32kHz to 24kHz
70°C	Auto reduce from 24kHz to 16kHz
80°C	Auto reduce from 16kHz to 12kHz
85°C	Auto reduce from 12kHz to 8kHz
94°C	Over temperature trip if 2606 >= 8kHz
97°C	Over temperature trip if 2606< 8kHz

Note: Switching frequency may be automatically reduced under certain operating conditions, refer to section Automatic Switching Frequency Reduction on page 88 for further information.

Typical Heatsink Requirement

The table below provides typical values for heatsink thermal resistance.

Three Phase Input 380 – 480VAC Supply Models

Product Type ACS260-04-	Effective Switching Frequency (KHz)	Typical Rated Output Power (W)	Approximate Efficiency	Maximum Heatsink Temperature (°C)	Recommended Maximum Heatsink Thermal Resistance (K/W)
02A2-4	4	750	97.7%	95	2.3
	8	750	97.3%	90	1.7
	12	750	96.8%	85	1.3
	16	750	97.0%	80	1.2
	24	750	96.5%	75	0.8
	32	750	96.0%	70	0.6
Standby Power Loss: 6 Watts					
04A1-4	4	1500	97.7%	95	1.1
	8	1500	97.3%	90	0.8
	12	1500	96.8%	85	0.6
	16	1500	97.0%	80	0.6
	24	1500	96.5%	75	0.4
	32	1500	96.0%	70	0.3
Standby Power Loss: 6 Watts					
05A8-4	4	2200	97.6%	95	0.64
	8	2200	97.2%	90	0.49
	12	2200	96.8%	85	0.37
	16	2200	96.4%	80	0.28
	24	2200	95.4%	75	0.18
Standby Power Loss: 6 Watts					
09A5-4	4	4000	97.3%	95	0.33
	8	4000	96.9%	90	0.26
	12	4000	96.5%	85	0.20
	16	4000	96.0%	80	0.15
	24	4000	94.9%	75	0.10
Standby Power Loss: 6 Watts					
12A0-4	4	5500	97.3%	95	0.33
	8	5500	96.9%	90	0.26
	12	5500	96.5%	85	0.20
	16	5500	96.0%	80	0.15
Standby Power Loss: 6 Watts					

4

Electrical installation

Contents of this chapter

The chapter describes the electrical installation procedure of the drive.

Power Connection Diagram

Diagram	Information
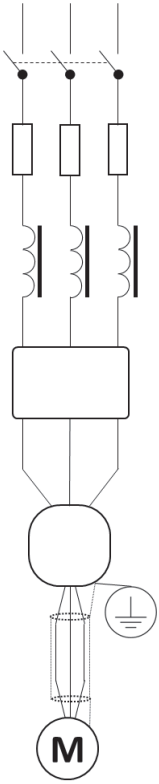	Incoming AC Supply For Three Phase Supply Drives: Connect L1, L2 and L3. Phase sequence is not important. External Mains Disconnect External Fusing / Protection Optional External AC Line Choke* Optional External EMC filter ACS260 Drive Unit Ground and PE connection Motor Cable Motor

*Not available for ACS260-04-12A0-4.

Protective Earth (PE) Connection

Grounding Guidelines

- The ground terminal of each ACS260 should be individually connected DIRECTLY to the site ground bus bar (through the filter if installed). ACS260 ground connections should not loop from one drive to another, or to, or from any other equipment.
- Ground loop impedance must confirm to local industrial safety regulations.
- To meet UL regulations, UL approved ring crimp terminals should be used for all ground wiring connections.
- The drive Safety Ground must be connected to system ground.
- Ground impedance must conform to the requirements of national and local industrial safety regulations and/or electrical codes.
- The integrity of all ground connections should be checked periodically.

Protective Earth Conductor

The cross-sectional area of the PE Conductor must be at least equal to that of the incoming supply conductor.

PE Connection

The PE connection must be directly connected to ground. PE connection locations for each model are highlighted below.

Frame Size R1

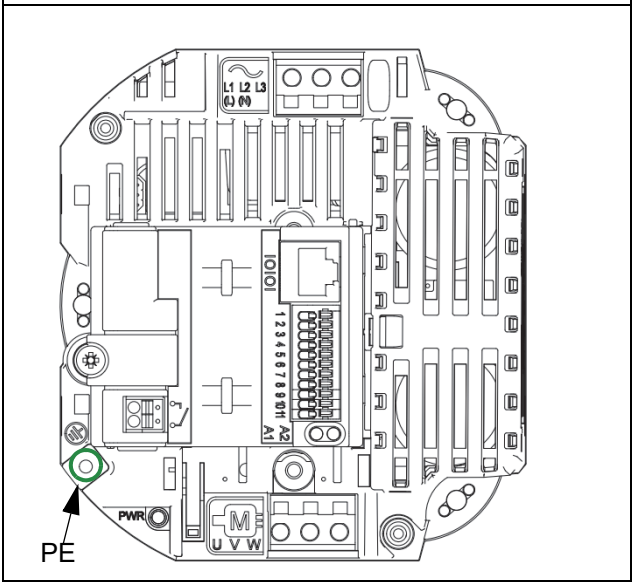

Frame Size R2

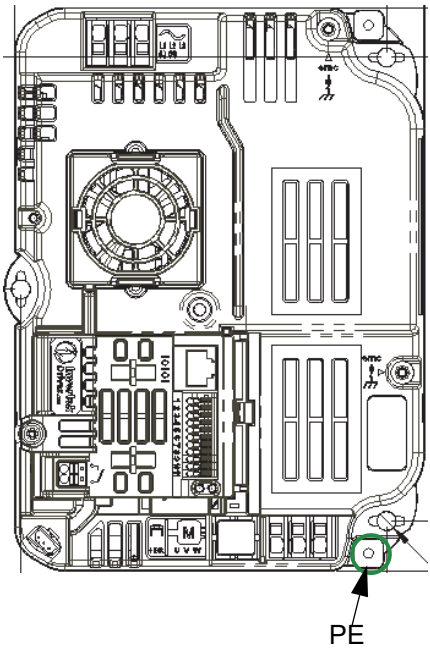

Safety Ground

This is the safety ground for the drive that is required by code. One of these points must be connected to adjacent building steel (girder, joist), a floor ground rod, or bus bar. Grounding points must comply with national and local industrial safety regulations and/or electrical codes.

Motor Ground

The motor ground must be connected to one of the ground terminals on the drive.

Ground Fault Monitoring

As with all inverters, a leakage current to earth can exist. The ACS260 is designed to produce the minimum possible leakage current whilst complying with worldwide standards. The level of current is affected by motor cable length and type, the effective switching frequency, the earth connections used and the type of RFI filter installed. If an ELCB (Earth Leakage Circuit Breaker) is to be used, the following conditions apply:

- A Type B Device must be used
- The device must be suitable for protecting equipment with a DC component in the leakage current
- Individual ELCBs should be used for each ACS260

Shield Termination (Cable Screen)

The safety ground terminal provides a grounding point for the motor cable shield. The motor cable shield connected to this terminal (drive end) should also be connected to the motor frame (motor end). Use a shield terminating or EMI clamp to connect the shield to the safety ground terminal.

Incoming Power Connection

General

- ACS260 Drive models are Over Voltage Category III according to EN60664-1:2007. Auxiliary circuits must be Over Voltage category II.
- Models intended for 380 - 480VAC supply are suitable for use on a circuit capable of delivering not more than 5kA symmetrical amperes, 480VAC maximum when protected by Class J Fuses rated.

Cable Selection

- For 3 phase supplies, the mains power cables should be connected to L1, L2, and L3. Phase sequence is not important.
- The cables should be dimensioned according to any local codes or regulations.
- The cable must be sufficient to carry the drive load current.
- For compliance with CE and EMC requirements, refer to section Electrical Rating Tables.
- A fixed installation is required according to IEC61800-5-1 with a suitable disconnecting device installed between the ACS260 and the AC Power Source. The disconnecting device must conform to the local safety code / regulations (e.g. within Europe, EN60204-1, Safety of machinery).

Fuse / Circuit Breaker Selection

- Suitable fuses to provide wiring protection of the input power cable should be installed in the incoming supply line, according to the data in section Electrical Rating Tables. The fuses must comply with any local codes or regulations in place. In general, type gG (IEC 60269) or UL type J fuses are suitable; however, in some cases type aR fuses may be required. The operating time of the fuses must be below 0.5 seconds.
- Where allowed by local regulations, suitably dimensioned type B MCB circuit breakers of equivalent rating may be utilised in place of fuses, providing that the clearing capacity is sufficient for the installation.
- The maximum permissible short circuit current at the ACS260 Power terminals as defined in IEC60439-1 is 5kA.

Motor Connection

- The drive inherently produces fast switching of the output voltage (PWM) to the motor compared to the mains supply, for motors which have been wound for operation with a variable speed drive then there is no preventative measures required, however if the quality of insulation is unknown then the motor manufacturer should be consulted and preventative measures may be required.
- The motor should be connected to the ACS260 U, V, and W terminals using a suitable 3 or 4 core cable. Where a 3-core cable is utilised, with the shield operating as an earth conductor, the shield must have a cross sectional area at least equal to the phase conductors when they are made from the same material. Where a 4-core cable is utilised, the earth conductor must be of at least equal cross-sectional area and manufactured from the same material as the phase conductors.
- The motor earth must be connected to one of the ACS260 earth terminals.

Motor Terminal Box Connections

Most general-purpose motors are wound for operation on dual voltage supplies. This is indicated on the nameplate of the motor. This operational voltage is normally selected when installing the motor by selecting either STAR or DELTA connection. STAR always gives the higher of the two voltage ratings.

Incoming Supply Voltage	Motor Nameplate Voltages	Connection	
230	230 / 400	Delta	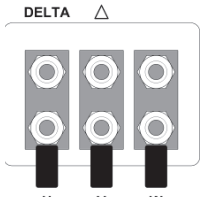
400	400 / 690		
400	230 / 400	Star	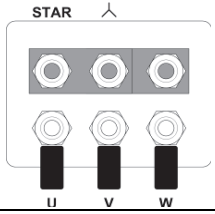

EMC Compliant Installation

Conducted Emissions According to EN61800-3

In order to meet conducted emissions standards an external EMC filter is required, furthermore without the EMC filter this table is invalid.

For compliance with the following conducted emission categories defined according to EN61800-3, the steps listed below are required.

Category	Supply Cable Type	Motor Cable Type	Control Cables	Maximum Permissible Motor Cable Length
C1[6]	Shielded[3]	Shielded[1,5]	Shielded[4]	1M / 1M[7]
C2	Shielded[3]	Shielded[1, 5]		3M / 3M[7]
C3	Unshielded[3]	Shielded[2]		10M / 10M[7]

1. A screened (shielded) cable suitable for fixed installation with the relevant mains voltage in use. Braided or twisted type screened cable where the screen covers at least 85% of the cable surface area, designed with low impedance to HF signals. Installation of a standard cable within a suitable steel or copper tube is also acceptable.

2. A cable suitable for fixed installation with relevant mains voltage with a concentric protection wire. Installation of a standard cable within a suitable steel or copper tube is also acceptable.

3. A cable suitable for fixed installation with relevant mains voltage. A shielded type cable is not necessary. The cable must be physically separate from any other cables which may carry noise.
4. A shielded cable with low impedance shield. Twisted pair cable is recommended for analog signals.
5. The cable screen should be terminated at the motor end using an EMC type gland allowing connection to the motor body through the largest possible surface area. Where drives are mounted in a steel control panel enclosure, the cable screen may be terminated directly to the control panel using a suitable EMC clamp or gland, as close to the drive as possible.
6. Compliance with category C1 conducted emissions only are achieved. For compliance with category C1 radiated emissions, additional measures may be required, contact your Sales Partner for further assistance.
7. Permissible cable length with additional external EMC filter.

Radiated Emissions According to EN61800-3

Compliance with EN61800-3 standard for radiated emissions and the categories defined under the standard is dependent on the nature of the installation. Compliance can only be determined by testing in an approved laboratory. It may be necessary to add additional components, such as ferrites to any cables to ensure compliance. The following list provides some outline guidance on what measures may be required.

- Mount the drive inside a grounded metallic enclosure
- Ensure any openings in the enclosure are kept as small as possible
- If necessary, add EMC gaskets to any removable cover assemblies
- Use a shielded motor cable
- Pay careful attention to cable routing within the enclosure to ensure noise is not transferred between cables. It is important to observe correct segregation between power and signal cables and also input / output cables.
- Keep all cables as short as possible
- Use shielding between cables to prevent noise transfer where required
- Ferrites may be added to any cables which must connect externally to minimise radiated noise

5

Start-up

Motor Control Selection (Advanced Parameter Mode)

When delivered, the drive is in the factory default state, meaning that it is set to operate in PM (permanent Magnet mode).

For Induction motor control, parameter 9903 (Motor control Mode) needs to be set accordingly.
Vector speed control (9903=0) will provide enhanced performance for constant torque applications like conveyor, mixers, or other applications subjected to dynamic loading.
9903 Motor parameter autotune MUST be performed at first startup when ***9903*** Vector speed control mode is selected.
All PMAC motors are run in PM sensorless vector control (9903=2).

1. Perform Mechanical and Electrical installation as section Application Macros The motor must be connected to the drive.
2. Connect a control switch between the control terminals 1 and 2 ensuring that the contact is open (drive disabled).
3. Navigate to the Advanced parameter menu as shown in *Group Navigation*.
   For Vector speed control mode, select "0" in ***9903*** Operating Mode Select and select "1"(using the drive keypad) in ***9910*** Motor parameter autotune. The Autotune function will immediately performs a non-rotating autotune and then returns ***9910*** to "0"
   Proceed with Operating Mode Select (Macros)

Operating Mode Selection

Setup can be simplified by selecting the operating mode for the drive in ***2605*** Operating Mode Select. This function provides a quick set up to configure key parameters to the intended application of the drive. Parameters ***2017*** Current Limit, ***2610*** & ***2611*** Torque Characteristic, and ***2101*** Spin Start are preset according to the table on page *54*.

Quick Start-up Terminal Control

When delivered, the drive is in the factory default state, meaning that it is set to operate in terminal control mode (Parameter *9902* DIGITAL INPUTS FUNCTION SELECT = 0 and *1103* PRIMARY COMMAND SOURCE MODE = 0) and all parameters have the default values as indicated in section 7 Parameters.

1. Perform Mechanical and Electrical installation as section Application Macros.
2. Connect a control switch between the control terminals 1 and 2 ensuring that the contact is open (drive disabled).
3. Connect a potentiometer (1kΩ min to 10 kΩ max) between terminals 5 and 7, and the wiper to terminal 6.
4. With the potentiometer set to zero, switch on the supply to the drive. The display will show stop.
5. Press and hold the navigate key for >1s to enter parameter view mode and enter motor data from motor nameplate into parameter *9905* MOTOR RATED VOLTAGE, ***9906*** MOTOR RATED CURRENT, and parameter *9907* MOTOR RATED FREQUENCY. Enter the rated RPM (nameplate) of the motor in ***9908*** MOTOR RATED SPEED to allow the display of the estimated motor speed.
6. Close the control switch, terminals 1-2. The drive is now ‘enabled’ and the output frequency/speed are controlled by the potentiometer. The display shows zero speed in Hz **(**H 0.0**)** with the potentiometer turned to minimum. If the display is not showing Hz, change it using the (Navigate) key.
7. Turn the potentiometer to maximum. The motor will accelerate to 50Hz (the default value of parameter ***2008*** MAXIMUM FREQUENCY / SPEED LIMIT) under the control of the accelerating ramp time parameter ***2202*** ACCELERATION RAMP TIME. The display shows 50Hz (H 60.0) at max speed.
8. To display motor current (A), briefly press the (Navigate) key.
9. To display estimated motor speed (RPM), briefly press the (Navigate) key a second time. (Motor nameplate speed (RPM) must be entered in ***9908*** Motor Rated Speed to display the estimated RPM).
10. To display power (Hp) briefly press the (Navigate) key a third time.

11. Press ⊼ again to return to speed (Hz) display.

    To stop the motor, either turn the potentiometer back to zero or disable the drive by opening the control switch (terminals 1-2).

If the enable/disable switch is opened the drive will decelerate to stop at which time the display will show StoP. If the potentiometer is turned to zero with the enable/disable closed the display will show **(**H 0.0**)** (0.0Hz), if left like this for 60 seconds the drive will go into standby mode, display shows standbY, waiting for a speed reference signal.

Quick Start-up Keypad Control

To allow the *ACS260* to be controlled from the keypad in a forward direction only, set parameter *1103* PRIMARY COMMAND SOURCE MODE =1:

Drive Operating Displays

1. Perform Mechanical and Electrical installation as Section *Application Macros*.
2. Connect a control switch between the control terminals 1 and 2 ensuring that the contact is open (drive disabled).
3. Switch on the supply to the drive, Press and hold the navigate key for > 1 to enter parameter view mode and set parameter 1103 Primary Command Source Mode = 1.
4. Enable the drive by closing the switch between control terminals 1 & 2. The display will show StoP.
5. Press the ◇ key. The display shows **(**H 0.0**)** . If the display is not showing Hz, change it using the ⊼ (Navigate).
6. Press △ to increase speed.
7. The drive will run forward, increasing speed until △ is released. The rate of acceleration is controlled by the setting of parameter 2202 ACCELERATION RAMP TIME, check this before starting.
8. Press ▽ to decrease speed. The drive will decrease speed until ▽ is released. The rate of deceleration is limited by the setting in 2203 DECELERATION RAMP TIME.
9. Press the ▼ key. The drive will decelerate to rest at the rate set in parameter 2203 DECELERATION RAMP TIME.
10. The display will finally show StoP at which point the drive is disabled.

11. To preset a target speed prior to enable, press the ▼ key while the drive is stopped. The display will show the target speed, use the △ & ▽ keys to adjust as required then press the ▼ key to return the display to StoP.

12. Pressing the ◇ key will start the drive accelerating to the target speed.

To allow the *ACS260* to be controlled from the keypad in a forward and reverse direction, set parameter *1103* PRIMARY COMMAND SOURCE MODE =2:

13. Operation is the same as when parameter *1103* PRIMARY COMMAND SOURCE MODE =1 for start, stop and changing speed.

14. Press the ◇ key. The display changes to **(**H 0.0**)** .

15. Press △ to increase speed

16. The drive will run forward, increasing speed until is released. Acceleration is limited by the sett△ing in parameter *2202* ACCELERATION RAMP TIME. The maximum speed is the speed set in parameter *2008* MAXIMUM FREQUENCY / SPEED LIMIT.

17. To reverse the direction of rotation of the motor, press the ◇ key again.

Drive Operating Displays

StoP	Drive mains power applied, but no Enable or Run signal applied	
H 0.0	Drive running, display shows output frequency (Hz)	Whilst the drive is running, the following displays can be selected by briefly pressing the button on the drive. Each press of the button will cycle the display through to the next selection.
A 0.0	Drive running, display shows motor current (Amps)	
P 0.0	Drive Running, display shows motor power (kW)	
stndbY	If the enable/disable switch is opened the drive will decelerate to stop at which time the display will show StoP. If the potentiometer is turned to zero with the enable/disable closed the display will show H 0.0.(0.0Hz) , if left like this for 60 seconds the drive will go into standby mode, display shows stndbY, waiting for a speed reference signal.	

6

Application Macros

Overview of macros

Application macros are pre-programmed parameter sets. While starting up the drive, the user selects the macro best suited for the purpose with parameter 9902 DIGITAL INPUTS FUNCTION SELECT and 1103 PRIMARY COMMAND SOURCE MODE.

***1103* (control Mode)**	**Selected Speed Reference**
0 : Terminal Mode	Analog input 1
1 : Keypad Mode (uni-directional)	Digital Potentiometer
2 : Keypad Mode (bi-directional)	Digital Potentiometer
4 : Fieldbus Control	Speed reference via Fieldbus
5 : User PI mode	PI controller output

Quick Start-up Terminal Control

Terminal Mode *1103* PRIMARY COMMAND SOURCE MODE = 0

9902	Digital input 1 (T2)	Digital input 2 (T3)	Digital input 3 (T4)	Analog input (T6)	Remark
0	Open: Stop (disable) Closed: Run (enable)	Open: Forward run Closed: Reverse run	Open: Analog speed ref Closed Preset speed 1	Analog input 1 reference	
1	Open: Stop (disable) Closed: Run (enable)	Open: Analog speed ref Closed: Preset speed 1/2	Open: Preset speed 1 Closed: Preset speed 2	Analog input 1 reference	
2	Open: Stop (disable) Closed: Run (enable)	**Digital Input 2** / **Digital Input 3** / **Preset Speed** Open / Open / Preset Speed 1 Closed / Open / Preset Speed 2 Open / Closed / Preset Speed 3 Closed / Closed / Preset Speed 4		Open: Preset speeds 1-4 Closed: Max Speed (parameter ***2008***)	4 Preset speeds selectable. Analog input used as digital input Closed status: 8V < Vin < 30V
3	Open: Stop (disable) Closed: Run (enable)	Open: Analog speed ref Closed: Preset speed 1	**External trip input:** Open: Trip, Closed: Run	Analog input 1 reference	Connect external motor thermistor PTC type or similar to digital input 3
4	Open: Stop (disable) Closed: Run (enable)	Open: Analog input 1 Closed: Analog input 2	Analog input 2 reference	Analog input 1 reference	Switches between analog inputs 1 and 2
5	Open: Fwd Stop Closed: Fwd Run	Open: Reverse Stop Closed: Reverse Run	Open: Analog speed ref Closed: Preset speed 1	Analog input 1 reference	Closing digital inputs 1 and 2 together carries out a fast stop (Parameter ***2206***)
6	Open: Stop (disable) Closed: Run (enable)	Open: Forward Closed: Reverse	**External trip input:** Open: Trip, Closed: Run	Analog input 1 reference	Connect external motor thermistor PTC type or similar to digital input 3
7	Open: Stop (disable) Closed: Fwd Run (enable)	Open: Stop (disable) Closed: Rev Run (enable)	**External trip input:** Open: Trip, Closed: Run	Analog input 1 reference	Closing digital inputs 1 and 2 together carries out a fast stop (Parameter ***2206***)
8	Open: Stop (disable) Closed: Run (enable)	Open: Forward Close: Reverse	**Digital Input 3** / **Analog Input 1** / **Preset Speed** Open / Open / Preset Speed 1 Closed / Open / Preset Speed 2 Open / Closed / Preset Speed 3 Closed / Closed / Preset Speed 4		
9	Open: Stop (disable) Closed: Forward Run (enable)	Open: Stop (disable) Closed: Reverse Run (enable)	**Digital Input 3** / **Analog Input 1** / **Preset Speed** Open / Open / Preset Speed 1 Closed / Open / Preset Speed 2 Open / Closed / Preset Speed 3 Closed / Closed / Preset Speed 4		Closing digital inputs 1 and 2 together carries out a fast stop (Parameter ***2206***)

10	Normally Open (NO) Momentary close to run	Normally Closed (NC) Momentary open to stop	Open : Analog speed ref Closed: Preset speed 1	Analog input 1 reference	
11	Normally Open (NO) Momentary close to run	Normally Closed (NC) Momentary open to stop	Normally Open (NO) Momentary close to rev	Analog input 1 reference	Closing digital inputs 1 and 3 together carries out a fast stop (Parameter ***2206***)
12	Open: Stop (disable) Closed: Run (enable)	Open: Fast Stop (disable) Closed: Run (enable)	Open: Analog speed ref Closed: Preset speed 1	Analog input 1 reference	
NOTE: Negative Preset Speeds will be inverted if Run Reverse selected					

***9902*=0**		***9902* = 1**	
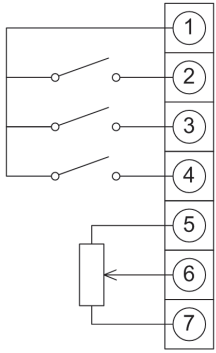	+24 Volt	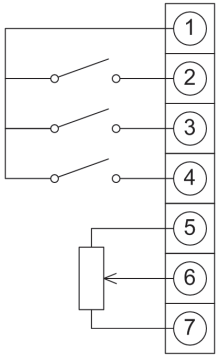	+24 Volt
	Run (Enable)		Run (Enable)
	For / Rev		Analog / Preset
	Analog / Preset		Preset1 / Preset2
	+ 10 Volts		+ 10 Volts
	Reference		Reference
	0 Volts		0 Volts
Analog speed input with 1 preset speed and fwd/rev switch		Analog speed input with 2 preset speeds	

***9902*=2**		***9902*=3**	
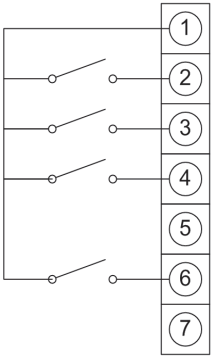	+24 Volt	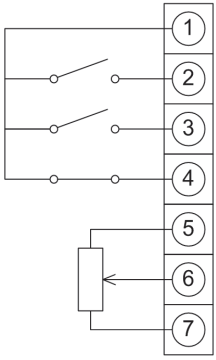	+24 Volt
	Run (Enable)		Run (Enable)
	Preset Speeds 1 – 4 Select		Analog / Preset 1
			External Trip
			+ 10 Volts
	Preset / Max		Reference
			0 Volts
4 preset speeds and max speed select switch. Effectively giving 5 preset speeds		Analog speed input with 1 preset speed and motor thermistor trip	

***9902*=4**		***9902*=11**	
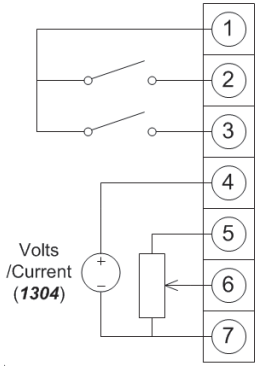	+24 Volt Run (Enable) Local / Remote (Hand / Auto) Remote (Auto) Reference + 10 Volts Local (Hand) Reference 0 Volts	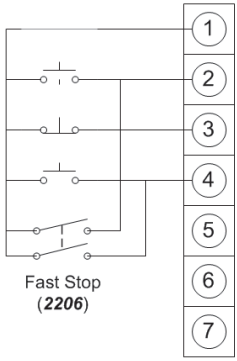	+24 Volt Run Forward Stop Run Reverse + 10 Volts Reference 0 Volts
Local or remote analog speeds (2 analog inputs)		Push button fwd/rev/stop with fast stop using 2nd deceleration ramp	

Keypad Mode *1103* PRIMARY COMMAND SOURCE MODE = 1 or 2

9902	Digital input 1 (T2)	Digital input 2 (T3)	Digital input 3 (T4)	Analog input (T6)	Comments
0, 1, 5, 8..12	Open: Stop (disable) Closed: Run (enable)	Closed : remote UP push-button	Closed : remote DOWN push-button	Open : Forward +24V : Reverse	
2	Open: Stop (disable) Closed: Run (enable)	Closed : remote UP push-button	Closed : remote DOWN push-button	Open : Keypad speed ref +24V : Preset speed 1	
3	Open: Stop (disable) Closed: Run (enable)	Closed : remote UP push-button	External trip input : Open: Trip, Closed: Run	Closed : remote DOWN push-button	Connect external motor thermistor PTC type or similar to digital input 3
4	Open: Stop (disable) Closed: Run (enable)	Closed : remote UP push-button	Open : Keypad speed ref Closed : Analog input 1	Analog input 1	
6	Open: Stop (disable) Closed: Run (enable)	Open : Forward run Closed : Reverse run	External trip input : Open: Trip, Closed: Run	Open : Keypad speed ref +24V : Preset speed 1	Connect external motor thermistor PTC type or similar to digital input 3
7	Open: Forward Stop Closed: Forward Run	Open: Reverse Stop Closed: Reverse Run	External trip input : Open: Trip, Closed: Run	Open : Keypad speed ref +24V : Preset speed 1	Closing digital inputs 1 and 2 together carries out a fast stop (*2206*)

***9902*=0**

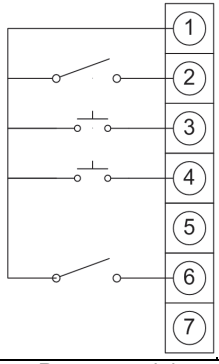

1	+24 Volt
2	Run (Enable)
3	Increase Speed
4	Reduce Speed
5	+ 10 Volts
6	Forward / Reverse
7	0 Volts

Remote push button speed control with fwd/rev

Note: By default if the enable signal is present the drive will not Enable until the START button is pressed. To automatically enable the drive when the enable signal is present set Parameter *1100* KEYPAD MODE RESTART FUNCTION = 2 or 3. This then disables the use of the START & STOP buttons.

Modbus Control Mode *1103* PRIMARY COMMAND SOURCE MODE = 4

9902	Digital input 1 (T2)	Digital input 2 (T3)	Digital input 3 (T4)	Analog input (T6)	Comments
0..2, 4..5, 8..12	Open: Stop (disable) Closed: Run (enable)	No effect	No effect	No effect	Run and stop commands given via the RS485 link and digital input 1 must be closed for the drive to run.
3	Open: Stop (disable) Closed: Run (enable)	Open: Master speed ref Closed: Preset speed 1	External trip input: Open: Trip, Closed: Run	No effect	Connect external motor thermistor PTC type or similar to digital input 3.
6	Open: Stop (disable) Closed: Run (enable)	Open: Master speed ref Closed: Analog input	External trip input: Open: Trip, Closed: Run	Analog input reference	Master Speed Ref-start and stop controlled via RS485. Keypad Speed Master Speed Ref - drive auto runs if digital input 1 closed, depending on Parameter **1100** setting.
7	Open: Stop (disable) Closed: Run (enable)	Open: Master speed ref Closed: keypad speed ref	External trip input: Open: Trip, Closed: Run	No effect	

For further information on the MODBUS RTU Register Map information and communication setup please refer to *Serial Communications*.

PI Mode *1103* PRIMARY COMMAND SOURCE MODE = 5b

9902	Digital input 1 (T2)	Digital input 2 (T3)	Digital input 3 (T4)	Analog input (T6)	Comments
0, 2, 9..12	Open: Stop (disable) Closed: Run (enable)	Open: PI control Closed: Preset speed 1	PI feedback analog input	Analog input 1	Analog Input 1 can provide an adjustable PI setpoint, by setting Parameter ***4010*** = 1
1	Open: Stop (disable) Closed: Run (enable)	Open: PI control Closed: Analog input 1	PI feedback analog input	Analog input 1	Analog Input 1 can provide an adjustable PI setpoint, by setting Parameter ***4010*** = 1
3, 7	Open: Stop (disable) Closed: Run (enable)	Open: PI control Closed: Preset speed 1	External trip input : Open: Trip, Closed: Run	PI feedback analog input	Connect external motor thermistor PTC type or similar to digital input 3
4	Normally Open (NO) Momentary close to run	Normally Closed (NC) Momentary open to stop	PI Feedback Analog Input	Analog Input 1	Normally Open (NO) Momentary close to run
5	Normally Open (NO) Momentary close to run	Normally Closed (NC) Momentary open to stop	Open: PI Control Closed: Preset Speed 1	PI Feedback Analog Input	Normally Open (NO) Momentary close to run
6	Normally Open (NO) Momentary close to run	Normally Closed (NC) Momentary open to stop	Open: External Trip Closed: Run	PI Feedback Analog Input	Normally Open (NO) Momentary close to run
8	Open: Stop (disable) Closed: Run (enable)	Open: Forward run Closed: Reverse run	PI feedback analog input	Analog input 1	Analog Input 1 can provide an adjustable PI setpoint, by setting Parameter ***4010*** = 1

PI Mode *1103*=5, *9902*=0	
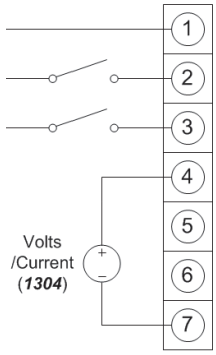	+24 Volt Run (Enable) PI / Preset Speed 1 PI Feedback 0 Volt
Remote closed loop PI feedback control with Local Preset speed 1	

PI Mode *1103*=5, *9902*=1	
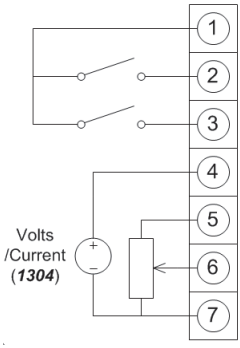	+24 Volt Run (Enable) PI / Local (Hand) PI Feedback +10 Volt Local (Hand) Ref 0 Volt
Remote closed loop PI feedback control with Local Analog speed input	

PI Mode *1103*=5, *9902*=3	
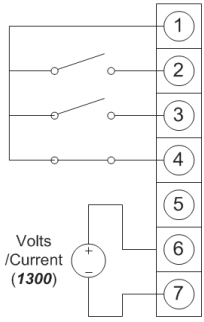	+24 Volt Run (Enable) PI / Preset Speed 1 External Trip PI Feedback 0 Volt
Remote closed loop PI feedback control with Local Preset speed 1 and motor thermistor trip	

Note: By default the PI reference is set for a digital reference level set in Parameter4011 PI DIGITAL REFERENCE (SETPOINT).

When using an Analog reference set Parameter 4010 PI DIGITAL REFERENCE (SETPOINT)= 1 (analog) and connect reference signal to analog input 1 (T6).

The default settings for proportional gain (parameter 4001), integral gain (Parameter 4002) and feedback mode (Parameter 4005) are suitable for most fan and pump applications.

The analog reference used for PI controller can also be used as the local speed reference when parameter 9902 DIGITAL INPUTS FUNCTION SELECT =1.

7

Parameters

Parameter Structure

The parameters within the drive are split into 3 groups, group 1 is titled “Short Parameter mode” displayed as “Par S” on the drive display, group 2 is titled “Long Parameter mode” displayed as “Par L” on the drive display and group 3 is titled “Advanced Parameter mode” displayed as “Par A”.

- “Par S” group brings together the most commonly used parameters to aid quick setup.
- “Par L” group includes all of the drive parameters (except those in “Par-A” group.
- “Par A” group includes the drives advanced functions.

Group Navigation

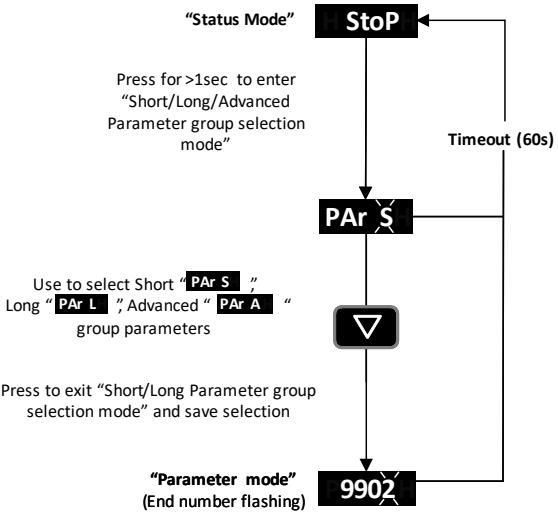

Parameter Structure table

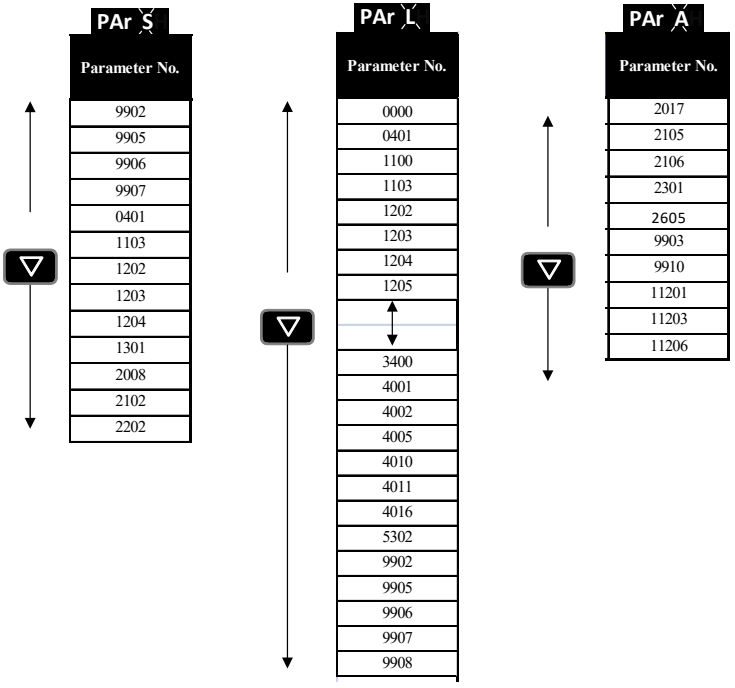

PAR-A Parameter list

The following table describes the parameters that are visible in the “PAR-A” mode (Advanced parameters).

Parameters in the Advanced parameter mode			
Index	Name/Selection	Description	Def
2017	Maximum Current Limit	Defines the max current limit in vector control modes.	110 %
	0.1…175.00		
2105	DC Injection Speed	Sets the speed at which DC injection current is applied during braking to Stop, allowing DC to be injected before the drive reaches zero speed if desired.	0.0 Hz/Rpm
	0.0…***2008***		
2106	DC Injection Current	Sets the level of DC injection braking current applied according to the conditions set in ***2104*** and ***2105***.	20 %
	0.0…*100.0*		
2301	Vector Mode Gain	Single Parameter for Vector speed loop tuning. Affects P & I terms simultaneously. Not active when ***9903*** = 1.	50 %
	0.0…*200.0*		
2605	Operating Mode Select	Provides a quick set up to configure key parameters according to the intended application of the drive. Parameters are preset according to the table.	2

Setting	Application	Current Limit (***2017***)	Torque Characteristic (***2610 & 2611***)	Spin Start (***2101***)
0	General	150%	Constant	0 : Off
1	Pump	110%	Variable	0 : Off
2	Fan	110%	Variable	2 : On

	0: Industrial Mode	Intended for general purpose applications.	
	1: Pump Mode	Intended for centrifugal pump applications.	
	2: Fan Mode	Intended for Fan applications.	
9903	Motor Control Mode	Selects the motor control method.	2
	0: Vector speed control mode		
	1: V/f mode		
	2: PM motor vector speed control		
	3: BLDC motor vector speed control		
9910	Motor parameter Autotune	Drive measures the motor parameters for optimum control and efficiency. Following completion of the autotune.	0: Disable
	0: Disable		
	1: Enable	Drive immediately carries out a non-rotating autotune, parameter ***9910*** MOTOR PARAMETER AUTO-TUNE ENABLE returns to 0 when completed.	

Index	Name/Selection	Description	Def
11201	MOTOR STATOR RESISTANCE (Rs)	Motor stator resistance value measured during the autotune.	-
11203	MOTOR STATOR INDUCTANCE (Lsd)	For induction motors: phase stator inductance value.	-
11206	MOTOR STATOR q-axis INDUCTANCE (Lsq)	measured during the autotune	-

Parameters in the Short parameter mode

The following table describes the parameters that are visible in the Short parameter mode.

Parameters in the Short parameter mode			
No.	**Name/Value**	**Description**	**Def**
99 START-UP DATA		Application macros.	
9902	DIGITAL INPUTS FUNCTION SELECT	Defines the function of the digital inputs depending on the control mode setting in Parameter ***1103*** PRIMARY COMMAND SOURCE MODE.	0
9905	MOTOR RATED VOLTAGE	This parameter should be set to the rated (nameplate) voltage of the motor (Volts).	Drive Rating Dependent
	0…500V	Voltage **Note :** The stress on the motor insulation is always dependent on the drive supply voltage. This also applies in the case where the motor voltage rating is lower than the rating of the drive and the supply of the drive.	
9906	MOTOR RATED CURRENT	This parameter should be set to the rated (nameplate) current of the motor.	Drive Rating Dependent
	0.25*drive rated output current…1.0*drive rated output current	Current	
9907	MOTOR RATED FREQUENCY	This parameter should be set to the rated (nameplate) frequency of the motor	50HZ
	25…500Hz	Frequency	
04 FAULT HISTORY		Fault history (read only)	
0401	TRIP HISTORY LOG	Displays the last four fault codes for the drive.	-
11 REFERENCE SELECT		The drive can accept a variety of references in addition to the conventional analog input, potentiometer and keypad signals.	
1103	PRIMARY COMMAND SOURCE MODE		0: Terminal Control
	0: TERMINAL CONTROL.	The drive responds directly to signals applied to the control terminals.	
	1: UNI-DIRECTIONAL KEYPAD CONTROL	The drive can be controlled in the forward direction only using an external or remote Keypad	
	2: BI-DIRECTIONAL KEYPAD CONTROL.	The drive can be controlled in the forward and reverse directions using an external or remote Keypad. Pressing the keypad START button toggles between forward and reverse.	
	3: MODBUS NETWORK CONTROL.	Control via Modbus RTU (RS485) using the internal accel / decel ramps	

	4: MODBUS NETWORK CONTROL.	Control via Modbus RTU (RS485) interface with accel / decel ramps updated via Modbus	
	5: PI CONTROL	User PI control with external feedback signal	
	6: PI ANALOG SUMMATION CONTROL.	PI control with external feedback signal and summation with analog input 1	

12 CONSTANT SPEEDS		Constant speeds. Constant speed activation overrides the external speed reference. Constant speed selections are ignored if the drive is in the local control mode. Preset Speeds / Frequencies selected by digital inputs depending on the setting of Parameter *9902* DIGITAL INPUTS FUNCTION SELECT. If Parameter ***9908*** MOTOR RATED SPEED = 0, the values are entered as Hz. If Parameter ***9908*** > 0, the values are entered as Rpm. Setting a negative value will reverse the direction of motor rotation.	
1202	PRESET / JOG FREQUENCY / SPEED 1	Defines constant speed 1 (that is the drive output frequency)	6.0Hz/RPM
	2007…-2008	Output Frequency	
1203	PRESET / JOG FREQUENCY / SPEED 2	Defines constant speed 2 (that is the drive output frequency)	12.0Hz/RPM
	2007…-2008	Output Frequency	
1204	PRESET / JOG FREQUENCY / SPEED 3	Defines constant speed 3 (that is the drive output frequency)	18.0Hz/RPM
	2007…-2008	Output Frequency	
1205	PRESET / JOG FREQUENCY / SPEED 4	Defines constant speed 4 (that is the drive output frequency)	24.0Hz/RPM
	2007…-2008	Output Frequency	
13 ANALOG INPUTS		Analog input signal offset	
1301	ANALOG INPUT 1 OFFSET	Sets an offset, as a percentage of the full scale range of the input, which is applied to the analog input signal	0.0%
	-500…500 %	Value in percent of the full scale range of the input Example: If the analog input signal format is 0-10V, offset = 20% . An analog input signal level of 7 Volts gives the following result :- Analog input level (%) = 7/10 = 70% Result = 70-20 (%) = 50%	

No.	Name/Value	Description	Def
20 LIMITS		Maximum frequency	
2007	MINIMUM FREQUENCY / SPEED LIMIT	Minimum output frequency or motor speed limit – Hz or rpm. If parameter ***9908*** MOTOR RATED SPEED >0, the value entered / displayed is in Rpm	0.0 Hz
	0…50 Hz	Minimum frequency	
2008	MAXIMUM FREQUENCY / SPEED LIMIT	Maximum output frequency or motor speed limit – Hz or rpm. If parameter ***9908*** MOTOR RATED SPEED >0, the value entered / displayed is in Rpm	50.0 Hz
	2007…500.0 Hz	Maximum frequency	
21 STOPPING MODE/MAINS LOSS RESPONSE		Stop mode of the motor	
2102	STOP MODE	Selects the motor stop function	0 = Ramp to stop

Setting	On Disable	On Mains loss
0	Ramp to Stop (***2203*** DECEL RAMP TIME)	Ride Through (Recover energy from load to maintain operation)
1	Coast	Coast
2	Ramp to Stop (***2203*** DECEL RAMP TIME)	Fast Ramp to Stop (***2206*** 2nd DECEL RAMP TIME), coast if ***2206*** is zero.
3	Ramp to Stop (***2203*** DECEL RAMP TIME) with AC flux braking	Fast Ramp to Stop (***2206*** 2nd DECEL RAMP TIME), coast if ***2206*** is zero.

22 ACCEL/DECEL		Acceleration and deceleration times	
2202	ACCELERATION RAMP TIME	Acceleration ramp time from 0 to base speed (Parameter ***9907*** MOTOR RATED FREQUENCY) in seconds.	15.0 s
	0.00…600.0 s	Time	
2203	DECELERATION RAMP TIME	Deceleration ramp time from base speed (Parameter ***9907*** MOTOR RATED FREQUENCY) to standstill in seconds. When set to zero, fastest possible ramp time without trip is activated.	15.0 s
	0.00…600.0 s	Time	

Parameters in the Long parameter mode

The following table includes the complete descriptions of all parameters that are visible only in the Long parameter mode.

Parameters in the Long parameter mode			
Index	**Name/Selection**	**Description**	**Def**
0000 Read only parameters access		Press the button when in this parameter to access the read only parameters as listed on page *60*.	-
04	**FAULT HISTORY**	Fault history (read-only)	
0401	TRIP HISTORY LOG	Displays the last four fault codes for the drive. Press UP or DOWN to step through all four. The most recent trip is always displayed first. The Under Voltage (F0006) trip is only stored once.	-
11	**REFERENCE SELECT**	The drive can accept a variety of references in addition to the conventional analog input, potentiometer and keypad signals.	
1100	KEYPAD MODE RESTART FUNCTION	This parameter is active only when operating in Keypad Control Mode (parameter *1103* PRIMARY COMMAND SOURCE MODE = 1 or 2).	0
	0: MINIMUM SPEED, KEYPAD START	Keypad Start and Stop keys are active, and control terminals 1 and 2 must be linked together. The drive will always start at the Minimum Frequency / Speed (parameter *2007*)	
	1: PREVIOUS SPEED, KEYPAD START	Keypad Start and Stop keys are active, and control terminals 1 and 2 must be linked together. The drive will always start at the last operating Frequency / Speed	
	2: MINIMUM SPEED, TERMINAL ENABLE	Allows the drive to be started from the control terminals directly, and the keypad Start and Stop keys are ignored. The drive will always start at the Minimum Frequency / Speed (parameter *2007*)	
	3: PREVIOUS SPEED, TERMINAL ENABLE	Allows the drive to be started from the control terminals directly, and the keypad Start and Stop keys are ignored. The drive will always start at the last operating Frequency / Speed.	
	4: CURRENT SPEED, KEYPAD START		
	5: PRESET SPEED 4, KEYPAD START		
	6: CURRENT SPEED, TERMINAL START		
	7: PRESET SPEED 4, TERMINAL START		
1103	PRIMARY COMMAND SOURCE MODE		0
	0: TERMINAL CONTROL.	The drive responds directly to signals applied to the control terminals.	
	1: UNI-DIRECTIONAL KEYPAD CONTROL	The drive can be controlled in the forward direction only using an external or remote Keypad	
	2: BI-DIRECTIONAL KEYPAD CONTROL.	The drive can be controlled in the forward and reverse directions using an external or remote Keypad. Pressing the keypad START button toggles between forward and reverse.	

	3: MODBUS NETWORK CONTROL.	Control via Modbus RTU (RS485) using the internal accel / decel ramps	
	4: MODBUS NETWORK CONTROL.	Control via Modbus RTU (RS485) interface with accel / decel ramps updated via Modbus	
	5: PI CONTROL	User PI control with external feedback signal	
	6: PI ANALOG SUMMATION CONTROL.	PI control with external feedback signal and summation with analog input 1	

Index	Name/Selection	Description	Def
12	**CONSTANT SPEEDS**	Constant speeds. Constant speed activation overrides the external speed reference. Constant speed selections are ignored if the drive is in the local control mode. Preset Speeds / Frequencies selected by digital inputs depending on the setting of Parameter *9902* DIGITAL INPUTS FUNCTION SELECT. If Parameter *9908* MOTOR RATED SPEED = 0, the values are entered as Hz. If Parameter *9908* > 0, the values are entered as Rpm. Setting a negative value will reverse the direction of motor rotation.	
1202	PRESET / JOG FREQUENCY / SPEED 1	Defines constant speed 1 (that is the drive output frequency)	6.0 Hz/RPM
	2007…-2008	Output Frequency	
1203	PRESET / JOG FREQUENCY / SPEED 2	Defines constant speed 2 (that is the drive output frequency)	12.0 Hz/RPM
	2007…-2008	Output Frequency	
1204	PRESET / JOG FREQUENCY / SPEED 3	Defines constant speed 3 (that is the drive output frequency)	18.0 Hz/RPM
	2007…-2008	Output Frequency	
1205	PRESET / JOG FREQUENCY / SPEED 4	Defines constant speed 4 (that is the drive output frequency)	24.0 Hz/RPM
	2007…-2008	Output Frequency	
13	**ANALOG INPUTS**		
1300	ANALOG INPUT 1 SIGNAL FORMAT	Selects the type of reference source into terminal 6.	**U 0-10**
	U0-10	0 to 10 Volt Signal(Uni-polar).The drive will remain at 0.0Hz if the analog reference after scaling and offset are applied is <0.0%.	
	B-10-10	0 to 10 Volt Signal (Bi-polar). The drive will operate the motor in the reverse direction of rotation if the analog reference after scaling and offset are applied is <0.0%	
	A0-20	0 to 20mA Signal	
	T4-20	4 to 20mA Signal, the *DRIVE* will trip and show the fault code **F0007** if the signal level falls below 3mA	
	R4-20	4 to 20mA Signal, the *DRIVE* will ramp to stop if the signal level falls below 3mA	
	T20-4	20 to 4mA Signal, the *DRIVE* will trip and show the fault code **F0007** if the signal level falls below 3mA	

	r20-4	20 to 4mA Signal, the *DRIVE* will ramp to stop if the signal level falls below 3mA	
	U10-0	10 to 0 Volt Signal (Uni-polar).The drive will operate at maximum frequency/speed if the analog reference after scaling and offset are applied is =<0.0%.	
1301	ANALOG INPUT 1 OFFSET	Sets an offset, as a percentage of the full scale range of the input, which is applied to the analog input signal	0.0%
	-500…500 %	Value in percent of the full scale range of the input Example: If the analog input signal format is 0-10V, offset = 20% . An analog input signal level of 7 Volts gives the following result : Analog input level (%) = 7/10 = 70% Result = 70-20 (%) = 50%	
1302	ANALOG INPUT 1 SCALING	Scales the analog input by this factor, (as a percentage of the full scale range of this input).	100.0
	0.0…2000.0 %	Example: If parameter *1300* ANALOG INPUT 1 FORMAT is set for 0 – 10V, and the scaling factor is set to 200.0%, a 5 volt input will result in the drive running at maximum speed as set in parameter *2008* MAX SPEED LIMIT	
1304	ANALOG INPUT 2 SIGNAL FORMAT	Selects the type of reference source into terminal 4.	U0-10
	U0-10	0 to 10 Volt Signal	
	A0-20	0 to 20mA Signal	
	t4-20	4 to 20mA Signal, the *DRIVE* will trip and show the fault code **F0007** if the signal level falls below 3mA	
	r4-20	4 to 20mA Signal, the *DRIVE* will ramp to stop if the signal level falls below 3mA	
	t20-4	20 to 4mA Signal, the *DRIVE* will trip and show the fault code **F0007** if the signal level falls below 3mA	
	r20-4	20 to 4mA Signal, the *DRIVE* will ramp to stop if the signal level falls below 3mA	
	ptc-th	Use for motor thermistor	
14	**RELAY OUTPUTS**	Status information indicated through relay output and relay operating delays	
1401	OUTPUT RELAY FUNCTION SELECT	Selects the function assigned to the relay output. The relay has two output terminals, Logic 1 indicates the relay is active, and therefore terminals 10 and 11 will be linked together.	1
	0 : DRIVE ENABLED (RUNNING)	Logic 1 when the motor is enabled	
	1 : DRIVE READY	Logic 1 when power is applied to the drive and no fault exists	
	2 : AT TARGET FREQUENCY (SPEED)	Logic 1 when the output frequency matches the setpoint frequency	
	3: DRIVE TRIPPED	Logic 1 when the drive is in a fault condition	
	4 : OUTPUT FREQUENCY >= LIMIT	Logic 1 when the output frequency exceeds the adjustable limit set in *3200* RELAY THRESHOLD LEVEL	

5 : OUTPUT CURRENT >= LIMIT	Logic 1 when the motor current exceeds the adjustable limit set in *3200* RELAY THRESHOLD LEVEL	
6 : OUTPUT FREQUENCY < LIMIT	Logic 1 when the output frequency is below the adjustable limit set in *3200* RELAY THRESHOLD LEVEL	
7 : OUTPUT CURRENT < LIMIT	Logic 1 when the motor current is below the adjustable limit set in *3200* RELAY THRESHOLD LEVEL	
8 : ANALOG INPUT 2 > LIMIT		
9 : DRIVE READY TO RUN		
10 : PULSE OUTPUT TO INDICATE DRIVE HAS TRIPPED	The pulsed output timing is to be as per the following diagram:	

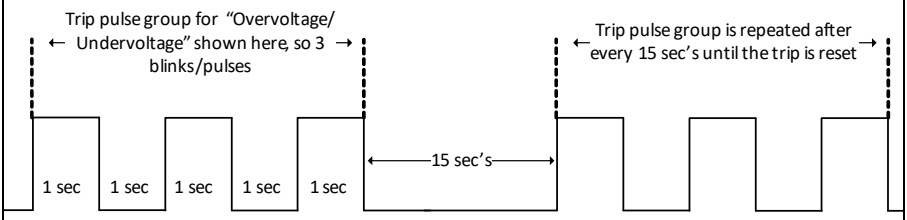

The number of pulses for a given trip are as follows:

No of Blinks/Pulses	Customer description of trip	Actual trip code in product	Notes
3	Overvoltage	F0002	Drive internal DC bus high.
	Under voltage	F0006	Drive internal DC bus Low.
4	Motor Over temperature	F_Ptc or F0009	PTC thermistor connected to drive indicates motor is over temperature or drives internal motor thermal overload shows motor is over temperature
	Drive Over temperature	F0003 or O-HEAt	Drive heatsink or drive internal temp too high.
5	Overcurrent	F0001	Output over current
6	Ext Fault (fault connected to a Digital input)	F0014	External trip as requested on digital input 3
7	Short Circuit	h O-I	Output short circuit
Constant on	Other trip		Any other trip not detailed within this table.

Index	Name/Selection	Description	Def
15	**ANALOG/DIGITAL OUTPUTS**	Analog output signal processing	
1501	**ANALOG OUTPUT FUNCTION SELECT**	Selects the type of output signal information indicated from terminal 8. **Note** : When using settings 0 – 7 the output is a digital format (Logic 1 = 24V). When using settings 8-9 the output is an analog format.	8 : OUTPUT FREQUENCY (MOTOR SPEED).
	0 : DRIVE ENABLED (RUNNING).	Logic 1 when the *DRIVE* is enabled (Running)	
	1 : DRIVE READY.	Logic 1 When no Fault condition exists on the drive	
	2 : AT TARGET FREQUENCY (SPEED).	Logic 1 when the output frequency matches the setpoint frequency	
	3: DRIVE TRIPPED.	Logic 1 when the drive is in a fault condition	
	4 : OUTPUT FREQUENCY >= LIMIT	Logic 1 when the output frequency exceeds the adjustable limit set in parameter *3200* RELAY THRESHOLD LEVEL	
	5 : OUTPUT CURRENT >= LIMIT	Logic 1 when the motor current exceeds the adjustable limit set in parameter *3200* RELAY THRESHOLD LEVEL	
	6 : OUTPUT FREQUENCY < LIMIT	Logic 1 when the output frequency is below the adjustable limit set in parameter *3200* RELAY THRESHOLD LEVEL	
	7 : OUTPUT CURRENT < LIMIT.	Logic 1 when the motor current is below the adjustable limit set in parameter *3200* RELAY THRESHOLD LEVEL	
	8 : OUTPUT FREQUENCY (MOTOR SPEED).	0 to parameter *2008 MAXIMUM FREQUENCY / SPEED LIMIT*	
	9 : OUTPUT (MOTOR) CURRENT.	0 to 200% of parameter *9906* MOTOR RATED CURRENT	
	10 : MOTOR POWER	0 to 200% of drive rated power.	
16	**SYSTEM CONTROLS**	Parameter lock etc.	
1602	PARAMETER ACCESS UNLOCK	If Parameter ***1603*** has had a value entered, then the matching value needs to be entered here in order to give read-write access to the parameters.	0
	0…65535		
1603	PARAMETER ACCESS CODE DEFINITION	To make all parameters Read only, enter a value in this parameter.	0
	0…65535		

20	LIMITS	Drive operation limits	
2007	MINIMUM FREQUENCY / SPEED LIMIT	Minimum output frequency or motor speed limit – Hz or rpm. If parameter ***9908*** MOTOR RATED SPEED >0, the value entered / displayed is in Rpm	0.0 Hz
	0.0 HZ…***2008***	Minimum frequency	
2008	*MAXIMUM FREQUENCY / SPEED LIMIT*	Maximum output frequency or motor speed limit – Hz or rpm. If parameter 9908 MOTOR RATED SPEED >0, the value entered / displayed is in Rpm	50.0 Hz
	2007*…500.0 Hz*	Maximum frequency	
2020	BRAKE CHOPPER ENABLE		0 : DISABLED
	0: DISABLED		
	1: ENABLED WITH SOFTWARE PROTECTION.	Enables the internal brake chopper with software protection for a 200W continuous rated resistor	
	2: ENABLED WITHOUT SOFTWARE PROTECTION.	Enables the internal brake chopper without software protection. An external thermal protection device should be fitted.	
	3: ENABLED WITH SOFTWARE PROTECTION.	As setting 1, however the Brake chopper is only enabled during a change of the frequency setpoint, and is disabled during constant speed operation.	
	4: ENABLED WITHOUT SOFTWARE PROTECTION.	As setting 2, however the Brake chopper is only enabled during a change of the frequency setpoint, and is disabled during constant speed operation.	

Index	Name/Selection	Description	Def
21 START/STOP		Start and Stop modes of the motor	
2101	FLYING START (Size R2 ONLY) / DC INJECTION TIME ON START (Size R1 ONLY)	Starting the drive connected to a rotating motor.	2: ENABLED ON TRIP, BROWN OUT OR COAST STOP
	0: DISABLED		
	1: ENABLED.	When enabled, on start up the drive will attempt to determine if the motor is already rotating, and will begin to control the motor from its current speed. A short delay may be observed when starting motors which are not turning/On Size R1 only this parameter Sets a time for which DC current is injected into the motor to ensure it is stopped when the drive is enabled.	
	2: ENABLED ON TRIP, BROWN OUT OR COAST STOP	Spin start is only activated following the events listed, otherwise it is disabled	

<table>
<tr><td>2102</td><td>STOP MODE</td><td>
<table>
<tr><th>Setting</th><th>On Disable</th><th>On Mains loss</th></tr>
<tr><td>0</td><td>Ramp to Stop (2203 DECEL RAMP TIME)</td><td>Ride Through (Recover energy from load to maintain operation)</td></tr>
<tr><td>1</td><td>Coast</td><td>Coast</td></tr>
<tr><td>2</td><td>Ramp to Stop (2203 DECEL RAMP TIME)</td><td>Fast Ramp to Stop (2206 2nd DECEL RAMP TIME), coast if 2206 is zero.</td></tr>
<tr><td>3</td><td>Ramp to Stop (2203 DECEL RAMP TIME) with AC flux braking</td><td>Fast Ramp to Stop (2206 2nd DECEL RAMP TIME), coast if 2206 is zero.</td></tr>
</table>
</td><td>0 = Ramp to stop</td></tr>
<tr><td>2104</td><td>DC INJECTION TIME ON STOP</td><td>Defines the time for which a DC current is injected into the motor once the output frequency reaches 0.0Hz. The voltage level is the same as the boost level set in parameter 2603.</td><td>0.0</td></tr>
<tr><td></td><td>0.0…25.0 s</td><td></td><td></td></tr>
<tr><td></td><td>DC INJECTION BRAKING MODE</td><td></td><td>0</td></tr>
<tr><td></td><td>0</td><td>DC injection on STOP</td><td></td></tr>
<tr><td></td><td>1</td><td>DC injection on START</td><td></td></tr>
<tr><td></td><td>2</td><td>DC injection on STOP and START</td><td></td></tr>
<tr><td>2108</td><td>TERMINAL MODE RESTART FUNCTION</td><td>Defines the behavior of the drive relating to the enable digital input and also configures the Automatic Restart function.</td><td>Auto-0</td></tr>
<tr><td></td><td>EdgE-r</td><td>Following Power on or reset, the drive will not start if Digital Input 1 remains closed. The Input must be closed after a power on or reset to start the drive.</td><td></td></tr>
<tr><td></td><td>AUto-0</td><td>Following a Power On or Reset, the drive will automatically start if Digital Input 1 is closed.</td><td></td></tr>
<tr><td></td><td>AUto-1 to AUto-5</td><td>Following a trip, the drive will make up to 5 attempts to restart at 20 second intervals. The drive must be powered down to reset the counter. The numbers of restart attempts are counted, and if the drive fails to start on the final attempt, the drive will fault and will require the user to manually reset the fault.</td><td></td></tr>
<tr><td colspan="2">22 ACCEL/DECEL</td><td colspan="2">Acceleration and deceleration times</td></tr>
<tr><td>2202</td><td>ACCELERATION RAMP TIME</td><td>Acceleration ramp time from 0 to base speed (Parameter 9907 MOTOR RATED FREQUENCY) in seconds.</td><td>15.0 s</td></tr>
<tr><td></td><td>0.00…600.0 s</td><td>Time</td><td></td></tr>
<tr><td>2203</td><td>DECELERATION RAMP TIME</td><td>Deceleration ramp time from base frequency (Parameter 9907 MOTOR RATED FREQUENCY) to standstill in seconds. When set to zero, fastest possible ramp time without trip is activated.
When set to 0.00, the value of 2206 is used.</td><td>15.0 s</td></tr>
<tr><td></td><td>0.00…600.0 s</td><td>Time</td><td></td></tr>
</table>

2206	2nd DECELERATION RAMP TIME (FAST STOP)	This parameter allows an alternative deceleration ramp down time to be programmed into the DRIVE, which can be selected by digital inputs (dependent on the setting of Parameter *9902* DIGITAL INPUTS FUNCTION SELECT or selected automatically in the case of a mains power loss if parameter *2102* STOP MODE = 2.	0.00
	0.00…600 s	When set to 0.00, the drive will coast to stop.	

25 CRITICAL SPEEDS		Speed bands with which the drive is not allowed to operate. The Skip Frequency function is used to avoid the DRIVE operating at a certain output frequency, for example at a frequency which causes mechanical resonance in a particular machine.	
2500	SKIP FREQUENCY HYSTERESIS BAND	The drive output frequency will ramp through the defined band at the rates set in parameter ***2202*** and ***2203*** respectively and will not hold any output frequency within the defined band. If the frequency reference applied to the drive is within the band, the drive output frequency will remain at the upper or lower limit of the band.	0.0 Hz/Rpm
	0.0…*2008*		
2501	SKIP FREQUENCY	Defines the center point of the skip frequency band, and is used conjunction with parameter *2500* SKIP FREQUENCY HYSTERESIS BAND	0.0Hz
	0.0…*2008*		
26 MOTOR CONTROL		Motor control variables	
2601	ENERGY OPTIMIZER	Only active when enhanced V/F motor control mode is selected (parameter *9903* MOTOR CONTROL MODE = 2)	1 : Enabled
	0 : DISABLED		
	1 : ENABLED		
2603	TORUQE BOOST	Torque boost is used to increase the applied motor voltage and hence motor current at low output frequencies. This can improve starting torque and torque at low speeds. Increasing the boost level will increase motor current at low speed, which may result in the motor temperature rising - forced ventilation of the motor may then be required. In general, the lower the motor power, the higher the boost setting that may be safely used. For IM motors(parameter 9903 = 0,1) the value in parameter 2603 defines the boost voltage as a percentage of the rated motor voltage in parameter 9905. When parameter 9903 = 2, 3,4, the amount of extra current injected is 4*(parameter 2603)*(parameter 9906)	3.0 %
	0.0…25.0 %		

2606	EFFECTIVE SWITCHING FREQUENCY	Sets maximum effective switching frequency of the drive. If “rEd” is displayed, the switching frequency has been reduced to the level in Parameter *0417* INTERNAL EFFECTIVE SWITCHING FREQUENCY due to excessive drive heat sink temperature. Refer to parameter *0417* INTERNAL EFFECTIVE SWITCHING FREQUENCY for further information regarding operation at higher switching frequency.	Drive Rating Dependent
	4…32 kHz		
2610	V/F CHARACTERISTIC ADJUSTMENT VOLTAGE	Used in conjunction with parameter *2611* V/F CHARACTERISTIC ADJUSTMENT FREQUENCY	0 V
	0 V…250/500		
2611	V/F CHARACTERISTIC ADJUSTMENT FREQUENCY	This parameter in conjunction with parameter *2610* V/F CHARACTERISTIC ADJUSTMENT VOLTAGE sets a frequency point at which the voltage set in parameter *2611* V/F CHARACTERISTIC ADJUSTMENT FREQUENCY is applied to the motor. Care must be taken to avoid overheating and damaging the motor when using this feature.	0.0 Hz
	0.0 Hz…Value set in *9907*		
30 FAULT FUNCTIONS		Programmable protection functions	
3005	THERMAL OVERLOAD VALUE RETENTION		0 : DISABLED
	0 : DISABLED	Alternative means of protecting the motor from thermal overload must be applied (e.g. PTC thermistor)	
	1 : ENABLED	The drive will retain the motor thermal overload value following a mains power cycle.	
	THERMAL OVERLOAD MANAGEMENT		
	0 : DISABLED		
	1 : ENABLED		
32 SUPERVISION		Signal supervision. The drive monitors whether certain user selectable variables are within the user-defined limits. The user may set limits for speed, current etc. Supervision status can be monitored with relay output. See parameter group 14 RELAY OUTPUTS.	
3200	RELAY THRESHOLD LEVEL	Adjustable threshold level used in conjunction with settings 4 to 7 of parameter *1401* OUTPUT RELAY FUNCTION SELECT	100.0 %
	0.0…200.0 %		

Index	Name/Selection	Description	Def
34 PANEL DISPLAY		Selection of actual signals to be displayed on the drives front panel e.g. to display conveyer speed in meters per second based on the output frequency	
3400	DISPLAY SCALING FACTOR	Allow the user to display an alternative output unit scaled from an existing parameter, This function is disabled if set to 0.000.	0.000
	0.000…16.000		
	DISPLAY SPEED SCALING SOURCE		
	0	Motor speed	
	1	Motor current	
	2	Analog Input 2	
	3	PI Feedback	
40 PROCESS PI SETUP		Process PI control parameter set	
4001	PI PROPORTIONAL GAIN	PI Controller Proportional Gain. Higher values provide a greater change in the drive output frequency in response to small changes in the feedback signal. Too high a value can cause instability	1.0
	0.0…30.0		
4002	PI INTEGRAL TIME CONSTANT	PI Controller Integral Time. Larger values provide a more damped response for systems where the overall process responds slowly	1.0 s
	0.0…30.0 S		
4005	PI OPERATING MODE		0
	0 : DIRECT OPERATION	Use this mode if an increase in the motor speed should result in an increase in the feedback signal	
	1 : INVERSE OPERATION	Use this mode if an increase in the motor speed should result in a decrease in the feedback signal	
4010	PI REFERENCE (SETPOINT) SOURCE SELECT	Selects the source for the PID Reference / Setpoint	0
	0	Digital Preset Setpoint. Parameter *4011* PI Digital Reference (Setpoint) is used	
	1	Analog Input 1 Setpoint	
4011	PI DIGITAL REFERENCE (SETPOINT)	When parameter *4010* PID REFERENCE (SETPOINT) SOURCE SELECT = 0, this parameter sets the preset digital reference (setpoint) used for the PID Controller	0.0 %
	0.0…100.0 %		
4016	PI FEEDBACK SIGNAL SOURCE SELECT		0
	0	Analog Input 2(Terminal 4)	
	1	Analog Input 1(Terminal 6)	
	2	Motor Current	
	3	DC Bus voltage	
	4	Analog 1- Analog 2	
	5	Largest (Analog 1, Analog 2)	

Index	Name/Selection	Description	Def
53 COMMUNICATIONS PARAMETERS			
5302	SERIAL COMMUNICATIONS CONFIGURATION	This parameter has three sub settings used to configure the Modbus RTU Serial Communications. The Sub Parameters are : **Drive Address** : Adr 0 to Adr 63 **Baud Rate** : For Modbus RTU 9.6kbps to 115.2kbps **Watchdog Timeout** : 0 (Disabled, 30, 100, 1000, 3000 milliseconds) A "**t**" suffix selects trip on loss of communication. An "**r**" suffix means that the drive will coast to stop (output immediately disabled) but will not trip.	Adr 1 115.2 3000
99 START-UP DATA		Application macros. Definition of motor set-up data. As shown in the table below Parameter ***9902*** has a number of pre-programmed parameter sets (and terminal functions) which the user selects to best suit the application.	
9902	DIGITAL INPUTS FUNCTION SELECT	Defines the function of the digital inputs depending on the control mode setting in Parameter ***1103*** PRIMARY COMMAND SOURCE MODE. See *Application Macros* on page *35*.	0
9905	MOTOR RATED VOLTAGE	This parameter should be set to the rated (nameplate) voltage of the motor (Volts).	Drive Rating Dependent
	110V/230V rated drives 0…250V 400V rated drives 0…500V	Voltage **Note :** The stress on the motor insulation is always dependent on the drive supply voltage. This also applies in the case where the motor voltage rating is lower than the rating of the drive and the supply of the drive.	
9906	MOTOR RATED CURRENT	This parameter should be set to the rated (nameplate) current of the motor Current.	Drive Rating Dependent
	0.25*drive rated output current…1.0*drive rated output current		
9907	MOTOR RATED FREQUENCY	This parameter should be set to the rated (nameplate) frequency of the motor	50HZ
	25…133Hz	Frequency	
9908	MOTOR RATED SPEED	This parameter can optionally be set to the rated (nameplate) rpm of the motor. When set to the default value of zero, all speed related parameters are displayed in Hz, and the slip compensation for the motor is disabled. Entering the value from the motor nameplate enables the slip compensation function, and the DRIVE display will now show motor speed in estimated rpm. All speed related parameters, such as Minimum and Maximum Speed, Preset Speeds etc. will also be displayed in Rpm.	0 Rpm
	0…4000 Rpm		

Read Only Status parameters

The user must be in the **Long Parameter group** to gain access to the Read only status parameters.

In the Long Parameter Group when the user scrolls to parameter "***0000***", pressing will display "***0104***", the User can then scroll to the required Read only status parameter (as listed in the table above). Pressing once more will then display the value of that particular Read only status parameter.

For those parameters which have multiple values (e.g. software ID parameter ***3301***), pressing the △ and ▽ keys will display the different values within that parameter.

Pressing returns to the next level up. If is then pressed again (without pressing △ or ▽), the display changes to the next level up (main parameter level, i.e. Parameter *"**0000**")*.

The following table includes the descriptions of all Read Only status parameters.

Actual signals		
No.	**Name/Value**	**Description**
01 OPERATING DATA		Basic signals for monitoring the drive (read-only). For selection of an actual signal to be displayed on the control panel, see parameter ***3405*** DISPLAY SCALING SOURCE.
0102	Rotor Speed (Estimated)	In vector control mode, this parameter displays the estimated rotor speed of the motor.
0104	Motor Current	8 most recent values prior to trip, updated every 250ms
0107	DC BUS VOLTAGE	Displays the instantaneous DC Bus Voltage internally within the drive in V DC. (0…1000V dc)
0109	APPLIED MOTOR VOLTAGE	Displays the instantaneous output voltage from the drive to the motor V AC. (0…600V AC)
0110	INTERNAL HEATSINK TEMPERATURE	Temperature of heatsink in ˚C (-20 … 100 °C)
0111	SPEED REFERENCE INPUT	Displayed in Hz if Parameter *9908* MOTOR RATED SPEED = 0, otherwise displayed in RPM. (*-2008 … 2008)*
0115	KWh/MWh METER	Total number of KWh/MWh consumed by the drive.
0120	ANALOG INPUT 1 APPLIED SIGNAL LEVEL	Displays the signal level applied to analog input 1 (Terminal 6) in % after scaling and offsets have been applied.
0121	ANALOG INPUT 2 APPLIED SIGNAL LEVEL	Displays the signal level applied to analog input 2 (Terminal 4) in % after scaling and offsets have been applied.
0126	PI CONTROLLER OUTPUT	Displays the output level of the PI controller in %.
0140	HOURS RUN METER	Not affected by resetting factory default parameters. (0 to 99 999 hours)
0150	INTERNAL DRIVE TEMPERATURE	Actual internal ambient temperature in °C

0160	DIGITAL INPUT STATUS	Binary value. Displays the status of the drive inputs, starting with the left hand side digit = Digital Input 1 etc.
0183	DC BUS VOLTAGE RIPPLE LEVEL	Displays the level of ripple present on the DC Bus Voltage in V DC. This parameter is used by the drive for various internal protection and monitoring functions.
0188	OPERATING TIME ACCUMULATED WITH HEATSINK TEMPERATURE ABOVE 85°C	Displays the amount of time in hours and minutes that the drive has operated for during its lifetime with a heatsink temperature in excess of 85°C. This parameter is used by the drive for various internal protection and monitoring functions. (HH:MM:SS)
0189	OPERATING TIME ACCUMULATED WITH AMBIENT TEMPERATURE ABOVE 80°C	Displays the amount of time in hours and minutes that the DRIVE has operated for during its lifetime with an ambient temperature in excess of 80°C. This parameter is used by the DRIVE for various internal protection and monitoring functions. (HH:MM:SS)
0190	DRIVE INTERNAL COOLING FAN TOTAL OPERATING TIME	Displays the total operating time of the drive internal cooling fans. The first value shown is the number of hours. Pressing the Up key will display the minutes and seconds. This is used for scheduled maintenance information (HH:MM:SS)
0192	DC BUS VOLTAGE RIPPLE LOG (22ms) (V DC)	8 most recent values prior to trip, updated every 22ms.
0193	HEATSINK TEMPERATURE LOG (30s) (°C)	8 most recent values prior to trip, updated every 30s.
0194	AMBIENT TEMPERATURE LOG (30s) (°C)	8 most recent values prior to trip, updated every 30s.
04 FAULT HISTORY		Fault history (read-only)
0402	RUN TIME SINCE LAST TRIP (1)	Run-time clock stopped by drive disable (or trip), reset on next enable only if a trip occurred. Reset also on next enable after a drive power down. (0 to 99 999 hours)
0406	DC BUS VOLTAGE LOG	8 most recent values prior to trip, updated every 250ms. (0 … 1000V)
0415	RUN TIME SINCE LAST TRIP (2)	Run-time clock stopped by drive disable (or trip), reset on next enable only if a trip occurred (under-volts not considered a trip) – not reset by power down / power up cycling unless a trip occurred prior to power down.(0 to 99 999 hours)
0416	RUN TIME SINCE LAST DISABLE	Run-time clock stopped on drive disable, value reset on next enable. (0 to 99 999 hours)
0417	DRIVE EFFECTIVE SWITCHING FREQUENCY	Actual drive effective output switching frequency. This value maybe lower than the selected frequency in parameter ***2606*** EFFECTIVE SWITCHING FREQUENCY if the drive is too hot. The drive will automatically reduce the switching frequency to prevent an over temperature trip and maintain operation. (4 to 32 kHz)

No.	Name/Value	Description
33 INFORMATION		Firmware package version, serial number etc..
3301	SOFTWARE ID, IO & MOTOR CTRL	e.g. “1.00”, “47AE” Version number and checksum. “1” on LH side indicates I/O processor, “2“ indicates motor control
3303	DRIVE SERIAL NUMBER	000000 … 999999 00-000 … 99-999 Unique drive serial number e.g. 540102 / 32 / 005
3304	DRIVE IDENTIFIER	Drive rating (Drive rating, drive type e.g. 0.37, 1 230,3P-out)

Parameter access locking/unlocking system

This function can be used to prevent an un-authorized person from changing the drive parameter values; this function is disabled when delivered from the factory.

Relevant Parameters

1602	Parameter Access Unlock
	0…65535
1603	Parameter Access code
	0…65535

Locking Parameter Access

- Go to Parameter ***1603*** and enter in your chosen parameter access code.
- Press the button ⊘ to exit and parameter ***1603*** will then be hidden and all parameters will be “Read only” (except for Parameter ***1602*** which will remain “Read Write”.

Unlocking Parameter Access

- Enter into Parameter ***1602*** the same value as ***1603*** (as chosen in step 1 above).
- All parameters will now be “Read Write” and parameter ***1603*** will become visible and show the value which was originally programmed as the parameter access code.

⚠ **WARNING!** ABB will not be liable for damages or losses caused by the failure to activate the user lock using a new pass code. See *Cybersecurity disclaimer*.

Terminal Configuration Options

Terminal Mode: (*1103 = 0*)

9902	Digital input 1	Digital input 2	Digital input 3 (An in 2)	Analog input 1	Comments
0	Open: Stop (disable) Closed: Run (enable)	Open: Forward run Closed: reverse run	Open: Analog input 1 Closed: Preset speed 1	Analog input 1	
1	Open: Stop (disable) Closed: Run (enable)	Open: Analog input 1 Closed: Preset speed 1 / 2	Open: Preset speed 1 Closed: Preset speed 2	Analog input 1	
2	Open: Stop (disable) Closed: Run (enable)	Preset Speed select 0	Preset Speed select 1	Open: Preset Speed 1...4 Closed: Max Speed (***2008***)	
3[1)]	Open: Stop (disable) Closed: Run (enable)	Open: Analog input 1 Closed: Preset speed 1	External trip/thermistor input: Open: Trip, Closed: Run	Analog input 1	Connect external thermistor type PT100 or similar to digital input 3
4	Open: Stop (disable) Closed: Run (enable)	Open: Analog input 1 Closed: Analog input 2	Analog input 2	Analog input 1	Switches between selected speed ref and Analog input 2
5	Open: Fwd. Stop Closed: Fwd. Run	Open: reverse Stop Closed: reverse Run	Open: Analog input 1 Closed: Preset speed 1	Analog input 1	Closing digital inputs 1 and 2 together carries out a fast stop
6[1)]	Open: Stop (disable) Closed: Run (enable)	Open: Forward run Closed: reverse run	External trip/thermistor input: Open: Trip, Closed: Run	Analog input 1	Connect ext. thermistor type PT100 or similar to Digi input 3
7[1)]	Open: Fwd. Stop Closed: Fwd. Run	Open: reverse Stop Closed: reverse Run	External trip/thermistor input: Open: Trip, Closed: Run	Analog input 1	Closing digital inputs 1 and 2 together carries out a fast stop
8	Open: Stop (disable) Closed: Run (enable)	Open: Forward run Closed: reverse run	Preset Speed select 0	Preset Speed select 1	
9	Open: Fwd. Stop Closed: Fwd. Run	Open: reverse Stop Closed: reverse Run	Preset Speed select 0	Preset Speed select 1	Closing digital inputs 1 and 2 together carries out a fast stop
10	Normally Open (NO) Momentary close to run	Normally Closed (NC) Momentary open to stop	Open: Analog input 1 Closed: Preset speed 1	Analog input 1	
11	Normally Open (NO) Momentary close to run	Normally Closed (NC) Momentary open to stop	Normally Open (NO) Momentary close to rev	Analog input 1	Closing digital inputs 1 and 3 together carries out a fast stop

12	Open: Stop (disable) Closed: Run (enable)	Close to run Open activates fast stop	Open: Analog input 1 Closed: Preset speed 1	Analog input 1	
13	Normally Open (NO) Momentary close to run	Normally Closed (NC) Momentary open to stop	Normally Open (NO) Momentary close to rev	Open: Keypad Speed Ref Closed: Preset speed 1	
14[1)]	Open: Stop (disable) Closed: Run (enable)	Preset Speed select 0	External trip/thermistor input: Open: Trip, Closed: Run	Preset Speed select 1	Preset speed 1 .. 4 selected as defined in this table

Note: When PTC motor thermistor is used, ***1304*** must set to “Ptc-th” mode. Otherwise digital input 3 will be used as external trip input (digital level sensitive). When ***1304*** is set to “Ptc-th”, drive will display code “F-Ptc” if thermistor value is large than 2.5kohm. The trip can only be reset if the thermistor value drops below 1.9kohm. Thermistor must be connected between terminal 1 (24V DC) and terminal 4 (2nd analog input). If ***1304*** is set to other value, the input will be used as external trip trigger input and drive will display code “E-trp” instead if the input is open. “E-trp” only happens when drive is enabled (running), however thermistor trip can happen at any time.

Preset Speed selection table for ***9902*** = 2, 8, 9 or 14:

Preset speed select 0	Preset speed select 1	Preset Speed
Open	Open	Preset Speed 1
Closed	Open	Preset Speed 2
Open	Closed	Preset Speed 3
Closed	Closed	Preset Speed 4

Keypad Mode: (*1103 = 1 or 2)*

9902	Digital input 1	Digital input 2	Digital input 3 (An In 2)	Analog input	Comments
0, 8...13	Open: Stop (disable) Closed: Run (enable)	Closed: remote UP push-button	Closed: remote DOWN push-button	Open: Forward Closed: Reverse	
1	Open: Stop (disable) Closed: Run (enable)	No effect	No effect	No effect	Default speed reference is PI controller speed reference
2	Open: Stop (disable) Closed: Run (enable)	Closed: remote UP push-button	Closed: remote DOWN push-button	Open: Keypad speed ref Closed: Preset speed 1	
3	Open: Stop (disable) Closed: Run (enable)	Closed: remote UP push-button	External trip/thermistor input: Open: Trip, Closed: Run	Closed: remote DOWN push-button	Connect external thermistor type PT100 or similar to digital input 3
4	Open: Stop (disable) Closed: Run (enable)	Closed: remote UP push-button	Open: Keypad speed ref Closed: Analog input 1	Analog input 1	
5	Open: Stop (disable) Closed: Run (enable)	Open: Forward run Closed: reverse run	Open: Keypad speed ref Closed: Analog input 1	Analog input 1	
6	Open: Stop (disable) Closed: Run (enable)	Open: Forward run Closed: reverse run	External trip/thermistor input: Open: Trip, Closed: Run	Open: Keypad speed ref Closed: Preset speed 1	Connect Ext thermistor type PT100 or similar to Digi input 3
7	Open: Fwd Stop Closed: Fwd Run	Open: reverse Stop Closed: reverse Run	External trip/thermistor input: Open: Trip, Closed: Run	Open: Keypad speed ref Closed: Preset speed 1	Closing digital inputs 1 and 2 together carries out a fast stop
14	Open: Stop (disable) Closed: Run (enable)	No effect	External trip/thermistor input: Open: Trip, Closed: Run	No effect	Connect external thermistor type PT100 or similar to digital input 3

Notes (keypad mode):

1. When changing from other speed reference (e.g. preset speed or analog speed) back to keypad speed reference (digital pot value) while drive is running, the following behaviour will be expected:
   If ***1100*** = 0 or 2, digital pot speed value will be set to minimum speed ***2007*** to start with.
   If ***1100*** = 1 or 3, digital pot will keep unchanged from last time adjustment.
   If ***1100*** = 4 or 6, digital pot value will be updated to be the same as current motor running speed.
   If ***1100*** = 5 or 7, digital pot value will be set to the same value as preset speed 4 to start with.

2. When drive is not running:
   If ***1100*** = 0, 2, 4 or 6, digital pot speed value will be set to minimum speed ***2007***.
   If ***1100*** = 1 or 3, digital pot will keep unchanged.

If ***1100*** = 5 or 7, digital pot value will be set to the same value as preset speed 4.

3. If ***1100*** = 2, 3, 6 or7, closing digital input 1 (or digital input 2 if ***9902*** = 7) will start the drive (Auto-run). The keypad START and STOP button will not function in this case. The keypad speed can still be adjusted using the UP and DOWN buttons.
4. If ***1103*** = 1, reverse speed can only be achieve by using preset speed or analog input speed. Reverse speed can also be achieved when using reverse run terminal input. Reverse speed cannot be selected via the local or remote keypad.
5. Where both Remote Up and Remote Down push button inputs are available, closing both inputs will start the drive
6. There is no single-step delay when using the remote push-buttons to change the speed. This delay is only implemented when using the drive keypad directly.

Modbus control mode: (*1103 = 3, 4, 7, 8)*

9902	Digital input 1	Digital input 2	Digital input 3 (An In 2)	Analog input	Comments
0, 2, 4, 8...13	Open: Stop (disable) Closed: Run (enable)	No effect	No effect	No effect	Digital input 1 must be closed for the drive to run. Start and stop commands given via the RS485 link
1	Open: Stop (disable) Closed: Run (enable)	No effect	No effect	No effect	Default speed reference is PI controller speed reference
3	Open: Stop (disable) Closed: Run (enable)	Open: Master speed ref Closed: Preset speed 1	External trip/thermistor input: Open: Trip, Closed: Run	No effect	Connect external thermistor type PT100 or similar to digital input 3
5	Open: Stop (disable) Closed: Run (enable)	Open: Master speed ref Closed: Preset speed 1/2	Open: Preset speed 1 Closed: Preset speed 2	No effect	When digital input 2 open, start & stop controlled via Modbus. When digi in 2 closed, drive auto runs if digi in 1 closed, and comms loss control will be disabled.
6	Open: Stop (disable) Closed: Run (enable)	Open: Master speed ref Closed: Analog input	External trip/thermistor input: Open: Trip, Closed: Run	Analog input reference	
7	Open: Stop (disable) Closed: Run (enable)	Open: Master speed ref Closed: keypad speed ref	External trip/thermistor input: Open: Trip, Closed: Run	No effect	
14	Open: Stop (disable) Closed: Run (enable)	No effect	External trip/thermistor input: Open: Trip, Closed: Run	No effect	

Note:

- If ***1100***=2, 3, 6 or 7, start/stop will be controlled by digital input 1 and communication trip will be disabled.(Exception if ***9902*** = 5, 6 and 7, see comments)

User PI control mode: (*1103 = 5 or 6)*

9902	Digital input 1	Digital input 2	Digital input 3 (An In 2)	Analog input	Comments
0, 2, 9...13	Open: Stop (disable) Closed: Run (enable)	Open: PI control Closed: Preset speed 1	No effect	No effect	Digital input 1 must be closed for the drive to run.
1	Open: Stop (disable) Closed: Run (enable)	Open: PI control Closed: Analog input 1	No effect	Analog input 1	
3, 7	Open: Stop (disable) Closed: Run (enable)	Open: PI control Closed: Preset speed 1	External trip/thermistor input: Open: Trip, Closed: Run	No effect	Connect external thermistor type PT100 or similar to digital input 3
4	Normally Open (NO) Momentary close to run	Normally Closed (NC) Momentary open to stop	No effect	No effect	
5	Normally Open (NO) Momentary close to run	Normally Closed (NC) Momentary open to stop	Open: PI control Closed: Preset Speed 1	No effect	
6	Normally Open (NO) Momentary close to run	Normally Closed (NC) Momentary open to stop	External trip/thermistor input: Open: Trip, Closed: Run	No effect	
8	Open: Stop (disable) Closed: Run (enable)	Open: Forward Closed: Reverse	PI feedback analog input	No effect	Digital input 1 must be closed for the drive to run.
14	Open: Stop (disable) Closed: Run (enable)	No effect	External trip/thermistor input: Open: Trip, Closed: Run	No effect	

8

Fault tracing

What this chapter contains

The chapter lists the warning and fault messages including possible causes and corrective actions. The causes of most warnings and faults can be identified and corrected using the information in this chapter. If not, contact an ABB service representative. If you have a possibility to use ECM tools, send the Support package created by the Drive composer to the ABB service representative.

Fault Code Messages

Fault Code	No.	Description	Corrective Action
StoP	0x00	Drive is READY and in a stopped condition. The motor is not energized. No enable signal is present to start the drive	
P-dEF	0X0A	Factory Default parameters have been loaded	Press the STOP key, drive is ready to configure for particular application
F0001	0x03	Instantaneous Over current on the drive output. Excess load or shock load on the motor.	**Fault occurs immediately on drive enable or run command** Check the output wiring connections to the motor and the motor for short circuits phase to phase and phase to earth. **Fault occurs during motor starting** Check the motor is free to rotate and there are no mechanical blockages. If the motor has a brake fitted, check the brake is releasing correctly. Check for correct star-delta motor wiring. Ensure the motor nameplate current is correctly entered in parameter ***9906.*** Increase acceleration time in parameter ***2202***. Reduce motor boost voltage setting in parameter ***2603*** **Fault occurs when motor operating at constant speed** Investigate overload. **Fault occurs during motor acceleration or deceleration** The accel/decel times are too short requiring too much power. If parameter ***2202*** or ***2203*** cannot be increased, a bigger drive may be required
F0009	0x04	Motor thermal overload protection trip. The drive has tripped after delivering >100% of value in *9906* for a period of time to prevent damage to the motor.	Ensure the correct motor nameplate current value is entered in parameter ***9906***. Check for correct Star or Delta wiring configuration. Check to see when the decimal points are flashing (which indicates the output current > parameter ***9906*** value) and either increase acceleration ramp (parameter ***2202***) or decrease motor load. Check the total motor cable length is within the drive specification. Check the load mechanically to ensure it is free, and that no jams, blockages or other mechanical faults exist
OI-b	0x01	Brake channel over current (excessive current in the brake resistor)	Check the cabling to the brake resistor and the brake resistor for short circuits or damage. Ensure the resistance of the brake resistor is equal to or greater than the minimum value for the relevant drive.
OL-br	0x02	Brake resistor thermal overload. The drive has tripped to prevent damage to the brake resistor	Only occurs if parameter ***2020*** = 1. The internal software protection for the brake resistor has activated to prevent damage to the brake resistor. Increase the deceleration time (parameter ***2203***) or 2nd deceleration time (parameter ***2206***). Reduce the load inertia **For Other Brake Resistors** Ensure the resistance of the brake resistor is equal to or greater than the minimum value for the relevant drive. Use an external thermal protection device for the brake resistor. In this case, parameter ***2020*** may be set to 2
F0004	ECT	Hardware Over Current	Check the wiring to motor and the motor for phase to phase and phase to earth short circuits. Disconnect the motor and motor cable and retest. If the drive trips with no motor connected, it must be replaced and the system fully checked and retested before a replacement unit is installed.

Fault Code	No.	Description	Corrective Action
F0002	0x06	Over voltage on DC bus	Check the supply voltage is within the allowed tolerance for the drive. If the fault occurs on deceleration or stopping, increase the deceleration time in parameter ***2203*** or install a suitable brake resistor and activate the dynamic braking function with parameter ***2020***
F0006	0x07	Under voltage on DC bus	The incoming supply voltage is too low. This trip occurs routinely when power is removed from the drive. If it occurs during running, check the incoming power supply voltage and all components in the power feed line to the drive.
F0003	0x08	Heatsink over temperature	The drive is too hot. Check the ambient temperature around the drive is within the drive specification. Ensure sufficient cooling air is free to circulate around the drive. Increase the panel ventilation if required. Ensure sufficient cooling air can enter the drive, and that the bottom entry and top exit vents are not blocked or obstructed.
	0x09	Under temperature	Trip occurs when ambient temperature is less than -10°C. The temperature must be raised over -10°C in order to start the drive.
	0x10	Faulty thermistor on heatsink.	Refer to your local ABB representative
O-hEAt	0x17	Drive internal temperature too high	Drive ambient temperature too high, check adequate cooling air is provided
F00 14	0x0B	External trip (on digital input 3)	E-trip requested on control input terminals. Some settings of parameter ***9902*** DIGITAL INPUTS FUNCTION SELECT require a normally closed contactor to provide an external means of tripping the drive in the event that an external device develops a fault. If a motor thermistor is connected check if the motor is too hot.
F00 10	0x0C	Comms loss trip	Check communication link between drive and external devices. Make sure each drive in the network has its unique address.
F0022	0x0E	Input phase loss trip	Drive intended for use with a 3 phase supply has lost one input phase.
SPI n-F	0x0F	Spin start failed	Spin start function failed to detect the motor speed.
F0027	0x11	Internal memory fault.	Parameters not saved, defaults reloaded. Try again. If problem recurs, refer to your local ABB representative
F0007	0x12	Analog input current out of range	Check input current in range defined by parameter ***1300.***
F002 1	-	Internal drive Fault	Refer to your local ABB representative
FAULtY	-	Internal drive Fault	Refer to your local ABB representative

Fault Code	No.	Description	Corrective Action
AtF-01	40	Autotune Fault	Measured motor stator resistance varies between phases. Ensure the motor is correctly connected and free from faults. Check the windings for correct resistance and balance.
AtF-02	41		Measured motor stator resistance too large. Ensure motor is correctly connected and free from faults. Check that the power rating corresponds to the power rating of the connected drive.
AtF-03	42		Measured motor inductance too low. Ensure the motor is correctly connected & free of faults.
AtF-04	43		Measured motor inductance is too large. Ensure the motor is correctly connected and free from faults. Check that the power rating corresponds to the power rating of the connected drive.
AtF-05	44		Measured motor parameters are not convergent. Ensure the motor is correctly connected and free from faults. Check that the power rating corresponds to the power rating of the drive.
OUt-Ph	49	Output(Motor) phase loss	
SC-F01	50	Modbus comms loss fault	Check the incoming Modbus RTU connection cable. Check that at least one register is being polled cyclically within the timeout limit set in ***1103*** Index 3
SC-F02	51	CAN comms loss trip	
_StoP _	-	Stop is displayed with flashing dots	Check power and motor connections. Indicates cross connection.
FLt-dc	0x0D	DC bus ripple too high	Check power supply network. Check if motor load is too high.
dAtA-E	0x13	Internal memory fault(DSP)	Refer to your local ABB representative.
U-dEF	0x14	User Default Parameters loaded	
F-Ptc	0x15	Motor PTC thermistor trip	Check if motor temperature is too high. Check PTC cable connection.
FAn-F	0x16	Cooling Fan Fault	Check stiring cooling fan rotating status. check the stirring fan cable connection.
OUt-F	0x1A	Drive output fault	Check motor cable connection. Check if motor has short-circuit or insulation failure.

9

Serial Communications

What this chapter contains

This chapter gives specific details on how to use Modbus RTU as the communication protocol of the ACS260. Below you will find register mapping, telegram structure, and connection details.

ACS260 drives support Modbus RTU communication, allowing a network of drives to be controlled and monitored by any Modbus RTU capable PLC or control system. The drive is always a Slave to an external Modbus RTU Master. This docu-ment describes the registers and functions available.Modbus RTU

Modbus RTU Communications Introduction

The ACS260 can be connected to a Modbus RTU network via the RJ45 connector or the control terminal strip.

Protocol	Modbus RTU
Error check	CRC
Baud rate	9600bps, 19200bps, 38400bps, 57600bps, 115200bps (default)
Data format	1 start bit, 8 data bits, 1 stop bits, no parity.
Physical signal	RS 485 (2-wire)
User interface	RJ45

RJ45 Connector Configuration

Connection details are shown in section *RJ45 Data Connection Pin Configuration*.

Modbus Telegram Structure

The following Modbus RTU Commands are supported

- 03 Read Holding Registers
- 06 Write Single Holding Register

The telegram structure is as follows:

Command 03 – Read Holding Registers					
Master Telegram	**Length**		**Slave Response**	**Length**	
Slave Address	1	Byte	Slave Address	1	Byte
Function Code (03)	1	Byte	Function Code (03)	1	Byte
1st Register Address	2	Bytes	Data Length	2	Bytes
No. Of Registers	2	Bytes	1st Register Value	2	Bytes
CRC Checksum	2	Bytes	2nd Register Value		
			Etc...		
			CRC Checksum	2	Bytes

Command 06 – Write Single Holding Register					
Master Telegram	**Length**		**Slave Response**	**Length**	
Slave Address	1	Byte	Slave Address	1	Byte
Function Code (06)	1	Byte	Function Code (06)	1	Byte
Register Address	2	Bytes	Register Address	2	Bytes
Value	2	Bytes	Register Value	2	Bytes
CRC Checksum	2	Bytes	CRC Checksum	2	Bytes

RJ45 Data Connection Pin Configuration

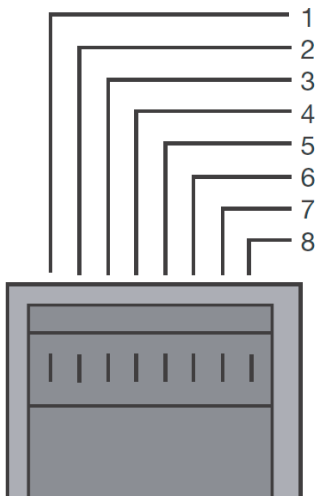

1	CAN
2	CAN+
3	0 Volt
4	Remote Keypad / PC Connection -
5	Remote Keypat / PD Connection +
6	+24 Volt Remote Keypad Power Supply
7	RS 485- Modbus RTU
8	RS 485+ Modbus RTU
	Data Format is Fixed at: 1 start bit, 8 data bits 1 Stop bit, No parity Baud rate and address set in 5302

Modbus Register Map

Control and status registers

NOTE: All registers are Holding Registers

Register Number	Par.	Upper byte	Lower byte	Format	Min	Max	Cmd	Type	Scaling
1	-	Control Word		WORD	-	-	03,06	R/W	See Below
2	-	Frequency Setpoint		S16	-5000	5000	03,06	R/W	1dp, e.g. 100 = 10.0Hz
3	-	Reserved		-	-	-	03,06	R/W	No function
4	-	Modbus ramp control time		U16	0	60000	03,06	R/W	2dp, e.g. 500 = 5.00s
5	-	Reserved		-	-	-	03,06	R	No function
6	-	Error code	Drive status	WORD	-	-	03	R	See Below
7	-	Output Frequency		S16	0	5000	03	R	1dp, e.g. 100 = 10.0Hz
8	-	Motor Current		U16	0	-	03	R	1dp, e.g. 100 = 10.0A
9	-	Motor Torque		S16	0	2000	03	R	1dp, e.g. 100 = 10.0%
10	-	Motor Power		U16	0	-	03	R	2dp, e.g. 100 = 1.00kW
11	0160	Digital Input Status		WORD	-	-	03	R	See Below
12	3304	Rating ID		U16	-	-	03	R	Internal Value
13	3304	Power rating		U16	-	-	03	R	2dp, e.g. 37 = 0.37kW / HP
14	3304	Voltage rating		U16	-	-	03	R	See Below
15	0192	IO processor software version		U16	-	-	03	R	2dp, e.g. 300 = 3.00
16	3301	Motor control processor software version		U16	-	-	03	R	2dp, e.g. 300 = 3.00
17	3304	Drive type		U16	-	-	03	R	Internal Value

Register Number	Par.	Upper byte	Lower byte	Format	Min	Max	Cmd	Type	Scaling
20	0120	Analog 1 input result		U16	0	1000	03	R	1dp, e.g. 500 = 50.0%
21	0121	Analog 2 input result		U16	0	1000	03	R	1dp, e.g. 500 = 50.0%
22	0111	Pre Ramp Speed Reference Value		S16	0	5000	03	R	1dp, e.g. 500 = 50.0Hz
23	0107	DC Bus Voltage		U16	0	1000	03	R	600 = 600 Volts
24	0110	Drive Power Stage Temperature		S16	-10	150	03	R	50 = 50°C
29	-	Relay Output Status		WORD	0	1	03	R	Bit 0 Indicates Relay Status 1 = Relay Contacts Closed
32	0115	kWh Meter		U16	0	9999	03	R	1dp, e.g. 100 = 10.0kWh
33	0115	MWh Meter		U16	0		03	R	10 = 10MWh
34	0140	Running Time - Hours		U16			03	R	1 = 1 Hour
35	0140	Running Time - Minutes & Seconds		U16			03	R	100 = 100 Seconds
36	0416	Run time since last enable - Hours		U16			03	R	1 = 1 Hour
37	0416	Run time since last enable - Minutes & seconds		U16			03	R	100 = 100 Seconds
38	-	Reserved		U16			03	R	No Function
39	0150	Internal Drive Temperature		S16	-10	-100	03	R	20 = 20C
40	-	Speed Reference (Internal Format)		U16	0	2008	03	R	3000 = 50Hz
41	-	Reserved		-	-	-	03	R	No Function
42		Digital Pot / Keypad Reference		U16	0	2008	03	R	3000 = 50Hz
43	0109	Output Voltage		U16	0	-	03	R	100 = 100 Volts AC RMS

WORD = WORD Format, functions assigned to individual bits S16 = Signed 16 Bit Integer
U16 = Unsigned 16 bit Integer

Control and Status Register Descriptions

Read-Write Registers

Register 1: Drive Control Word

15	14	13	12	11	10	9	8	7	6	5	4	3	2	1	0
High byte								Low byte							

Bit 0: Run/Stop command: Set to 1 to enable the drive. Set to 0 to stop the drive.

Bit 1:

Bit 2:

User must clear this bit when drive is under normal condition to prevent un-expected reset.

Bit 3:

For normal operation, Bit 3 has the highest priority, bit 0 has the lowest priority (bit 3>bit 1>bit 0). For example, if user set command as 0x0009, drive will do a coast stop rather than run. For normal run/start, just set this register to 1.

Note that stat/stop (bit 0), fast stop (bit 1) and coast stop (bit 3) only works if 1100= 0 or 1. Otherwise, start/stop function is controlled by drive control terminals. Reset function (bit 2) works all the time as long as drive is operated under Modbus control mode (1103=3 or 4).

Register 2: Speed Reference

This register holds the speed reference value with one decimal place (200 = 20.0Hz). The maximum speed reference value is

limited by 2008. Either register 2 or register 5 can be used for speed reference control, however only one reference should be

used in any control system, otherwise unexpected behaviour can result.

Register 4: Acceleration / Deceleration Ramp Time

Active only when 1103 = 4, this register specifies the drive acceleration and deceleration ramp time. The same value is applied

simultaneously to the acceleration and deceleration ramp times. The value has two decimal places, e.g. 500 = 5.00 seconds.

Read Only Registers

Register 6: Drive status and error code

High byte gives drive error code. (Valid when the drive is tripped, see Appendix D – Drive Fault Code and Information for further

details)

Low byte gives drive status information as follows :-

Bit 0: 0 =Drive Stopped, 1 = Drive Running

Bit 1: 0 = OK, 1 = Drive Tripped

Bit 5: 0 = OK, 1 = In Standby Mode

Bit 6: 0 = Not Ready, 1 = Drive Ready to Run (not tripped, hardware enabled and no mains loss condition)

Parameter Registers and Scaling

All user adjustable parameters within the drive are accessible by Modbus, and can be Read or Written to. For further information regarding the parameter functions and specific settings, please refer to the User Guide.

Register	Par.	Description	Format	Min	Max	Data format/scaling
130	1100	Keypad restart mode	U16	0	7	
131	1103	Control mode	U16	0	6	0: Terminal Control 1: Keypad forward only 2: Keypad forward and reverse 3: Modbus control mode 4: Modbus control with ramp control 5: PID control 6: PID control with analog speed sum 7: CAN Open
132	1202	Preset Speed 1	U16	-2008	2008	Internal value (3000 = 50.0Hz)
133	1203	Preset Speed 2	U16	-2008	2008	Internal value (3000 = 50.0Hz)
134	1204	Preset Speed 3	U16	-2008	2008	Internal value (3000 = 50.0Hz)
135	1205	Preset Speed 4	U16	-2008	2008	Internal value (3000 = 50.0Hz)
136	1300	Analog input format	U16	0	7	0: 0…10V 1: b 0…10V 2: 0…20mA 3: t 4…20mA 4: r4…20mA 5: t 20…4mA 6: r 20…4mA 7: 10…0V
137	1301	Analog iput offset	U16	-5000	5000	1dp,e.g. 300=30.0%
138	1302	Analog Input /Slave Scaling	U16	0	20000	1000 = 100.0%
139	1304	Analog Input 2 Format	U16	0	6	0: 0…10V 1: b 0…10V 2: 0…20mA 3: t 4…20mA 4: r4…20mA 5: t 20…4mA 6: Ptc-th
140	1401	Relay Output Function	U16	0	9	
141	1501	Analog Output Function	U16	0	10	
142	1602	Parameter lock	U16	0	1	0: Unlocked 1: Locked
143	1603	Access code definition	U16	0	9999	
144	2007	Min speed limit	U16	0	2008	Internal value (3000 = 50.0Hz)
145	2008	Max speed limit	U16	0	5*9907	Internal value (3000 = 50.0Hz)
146	2020	Brake circuit enable	U16	0	4	
147	2101	Spin Start Enable	U16	0	2	
148	2102	Stop Mode	U16	0	2	0: Ramp to stop + Mains Loss Ride Through 1: Coast to stop 2: Ramp to stop + Fast Stop 3: Ramp to stop + Fast Stop
149	2104	DC Injection	WORD	See Below		

Register	Par.	Description	Format	Min	Max	Data format/scaling
150	2108	Start Mode Select	U16	0	6	0: Edgr-r 1: Auto_0 2...6 : Auto_1 to Auto_5
151	2202	Accel ramp time	U16	0	60000	2dp, e.g. 300=3.00s
152	2203	Decel ramp time	U16	0	60000	2dp, e.g. 300=3.00s
153	2206	2nd Ramp	U16	0	2500	2dp e.g. 250 = 2.50s
154	2500	Skip Frequency Centre	U16	0	2008	Internal value (3000 = 50.0Hz)
155	2501	Skip Frequency Band	U16	0	2008	Internal value (3000 = 50.0Hz)
156	2601	Energy Optimiser	U16	0	1	0: Disabled 1: Enabled
157	2603	Boost Value	U16	0	Drive Rating Dependent	1dp, e.g. 100 = 10.0%
158	2606	Effective switching frequency	U16	0	5 Drive Rating Dependent	0=4KHZ 1=8KHZ 2=12KHZ 3=16KHZ 4=24KHZ 5=32KHZ
159	2610	V/F Adjust Voltage	U16	0	9905	100 = 100V
160	2611	V/F Adjust Frequency	U16	0	9907	50 = 50Hz
161	3005	Thermal Overload Retention	U16	0	1	
162	3200	Digital Threshold	U16	0	1000	100 = 10.0%
163	3400	Display Scaling Function	WORD	See Below	300	
164	4001	User PI P gain	U16	1	300	1dp, e.g. 10 = 1.0
165	4002	User PI I time constant	U16	0	300	1dp, e.g. 10 = 1.0
166	4005	User PI mode select	U16	0	1	
167	4010	User PI reference select	U16	0	1	
168	4011	User PI digital reference	U16	0	1000	1dp, e.g. 100 =10.0%
169	4016	User PI feedback select	U16	0	3	
170	5302	Communication Settings	WORD	See Below		
171	9902	Digital input function	U16	0	17	
172	9905	Motor rated Volts	U16	0	250/500	400 = 400 Volts
173	9906	Motor rated Current	U16	0	Drive Rating Dependent	1dp, e.g. 100 = 10.0A
174	9907	Motor rated Frequency	U16	25	500	Data unit is in Hz
175	9908	Motor rated speed	U16	0	30000	Maximum value equals to the sync speed of a typical 2-pole motor
176	2017	Maximum Current Limit	U16	0	1750	1dp, e.g. 1000 = 100.0%
177	2105	DC Injection Speed	U16	0	2008	3000 = 50.0Hz
178	2106	DC Injection Current	U16	0	1000	1dp, e.g. 100 = 10.0%
179	2301	Vector Mode Gain	U16	0	2000	1dp, e.g. 500 = 50.0%
180	2605	Application Mode	U16	0	2	0: Industrial Mode 1: Pump Mode 2: Fan Mode
181	9903	Motor Control Mode	U16	0	4	0: IM Vector 1: V/F 2: PM Motor 3: BLDC Motor

182	9910	Motor Parameter Autotune	U16	0	1	
183	11201	Motor Stator Resistance	U16	0	65535	2dp, e.g. 100 = 1.00R
184	11203	Motor Stator d-axis Inductance (Lsd)	U16	0	65535	1dp, e.g. 1000 = 100.0mH
185	11206	Motor Stator q-axis Inductance (Lsq)	U16	0	65535	1dp, e.g. 1000 = 100.0mH

Additional Information

DC Injection Configuration

The parameter value is stored as a combined 16 bit word which is constructed as follows:

High Byte								Low Byte							
15	14	13	12	11	10	9	8	7	6	5	4	3	2	1	0
DC Injection Mode 0: DC Injection on Start 1: DC Injection on Stop 2: DC Injection on Start & Stop								DC Injection Duration : 1dp, e.g. 0 – 250 = 0.0 – 25.0s							

Communications Configuration

This Register entry contains multiple data entries, as follows:

High Byte								Low Byte							
15	14	13	12	11	10	9	8	7	6	5	4	3	2	1	0
Trip Configuration				Baud Rate				Drive Address							

Data values can be interpreted as follows:		
Drive Address	1 to 63	
Baud Rate	0	115k2
	1	115k2
	2	9k6
	3	19k2
	4	38k4
	5	57k6
	6	115k2
	7	115k2
	8	115k2
	9	115k2
	10	115k2
Trip Time Set-up	0	Comms Loss Trip Disabled
	1	30ms Watchdog, Trip on Comms Loss
	2	300ms Watchdog, Trip on Comms Loss
	3	1000ms Watchdog, Trip on Comms Loss
	4	3000ms Watchdog, Trip on Comms Loss
	5	30ms Watchdog, Ramp To Stop on Comms Loss
	6	300ms Watchdog, Ramp To Stop on Comms Loss
	7	1000ms Watchdog, Ramp To Stop on Comms Loss
	8	3000ms Watchdog, Ramp To Stop on Comms Loss

The parameter value is stored as a combined 16 bit word which is constructed as follows:

High Byte								Low Byte							
15	14	13	12	11	10	9	8	7	6	5	4	3	2	1	0
Display Scaling Source 0:Motor Speed 1:Motor Current 2:Analog Input 2 Signal 3:PI Feedback		Display Scaling Factor : 3dp, e.g. 0 – 16000 = 0.000 – 16.000													

Modbus Exception Response Telegrams

Under some circumstances, the drive may reply with an Exception Response (error) in response to a request telegram sent from the network master, for example where the master tries to read a register which does not exist. Exception Responses which can be generated by the drive are listed below:

Exception Code 1: Invalid Request

Exception Code 1: Invalid Modbus register

Exception Code 1: Register Value Out of Range

Exception Code 1: Drive Busy

Exception codes may be returned under the following conditions:

- Network Master sends an unsupported Modbus command (e.g. Read Coils).
- Run command issued to drive whilst the drive is not set for Modbus Control Mode (e.g. 1103 <>4).
- Run command issued to drives whilst the drive is not enabled (e.g. Digital Input 1 is open).
- Run command issued to drive whilst the drive is in a tripped condition.
- Network Master attempts to read or write a register that does not exist within the drive.
- Network Master attempts to write a holding register with a value outside the range of the register
- Drive busy due to internal data transfer. The Network Master should re-send the message after a delay

Dataflow Example

Read data from register 6

Request:	[01]	[03]	[00] [05]	[00] [01]	[94] [0B]
	(Drive Addr)	(Command)	(Reg start addr)	(No. of Registers)	(Checksum)
Reply:	[01]	[03]	[02]	[00] [00]	[B8] [44]
	(Drive Addr)	(Command)	(No of data bytes)	(Data)	(Checksum)

Note: The actual start address of register 6 is 5. All data in [ ] is in 8bits Hex format.

Write start command to the register 1 (suppose 1103 = 3, 9902 =0 and digital input 1 is closed):

Request:	[01]	[06]	[00] [00]	[00] [01]	[48] [0A]
	(Drive Addr)	(Command)	(Reg addr)	(Data value)	(Checksum)
Reply:	[01]	[06]	[00] [00]	[00] [01]	[48] [0A]
	(Drive Addr)	(Command)	(Reg addr)	(Data value)	(Checksum)

Note: The actual address of register 1 on the data link is 0. All data in [ ] is in 8bits Hex format.

Reply can be error message depending on drive parameter settings and digital input status.

Note: By default the PI reference is set for a digital reference level set in Parameter 4011 PI DIGITAL REFERENCE (SETPOINT).

When using an Analog reference set Parameter 4010 PI DIGITAL REFERENCE (SETPOINT)= 1 (analog) and connect reference signal to analog input 1 (T6).

The default settings for proportional gain (parameter 4001), integral gain (Parameter 4002) and feedback mode (Parameter 4005) are suitable for most fan and pump applications.

The analog reference used for PI controller can also be used as the local speed reference when parameter 9902 DIGITAL INPUTS FUNCTION SELECT =1.

10

Technical Data

Environmental

Operational ambient temperature range	-10 … 50°C (frost and condensation free)
Storage ambient temperature range:	-40 … 60°C
Storage ambient temperature range:	Maximum altitude: 2000m. Derate above 1000m : 1% / 100m
Maximum humidity:	95%, non-condensing

Electrical Data

Mains Supply Details	
Supply Voltage Range	400 Volt Units – 380 – 480 Volt +10% / -10%
Supply Frequency	48 – 62Hz
Inrush Current	< rated input current
Power Up Cycles	<120x /hr, evenly spaced
Single Phase Operation*	Three phase drives can be operated from a single-phase supply with 50% derating of the maximum output current
Earth Leakage	When operating from a balanced three phase supply with the permissible supply voltage range, touch current according to IEC61800-5-1 does not exceed 3.5mA.
Motor Control	
Output Frequency Range	0 to 500Hz in 0.1 Hz steps Max Output Frequency = Max Switching Frequency / 16.
Output Voltage Range	0 to Supply Voltage
Speed Regulation	Open Loop < 2% motor rated speed
Torque Control	0 – 175% of rated torque, + / -5% accuracy, Response time <10ms
Effective Switching Frequency	4 – 32kHz
Acceleration Time	0 – 600 seconds, 0.1s resolution
Deceleration Time	Two deceleration ramps 0 – 600 seconds, 0.1s resolution

*Not available for ACS260-04-12A0-4

Digital & Analog I/O

Digital Inputs Specification

Voltage Range	8 – 30 V dc, Internal or External supply, NPN (positive logic)
Response Time	< 8ms

Analog Inputs Specification

Range	Current: 0-20mA, 4-20mA. 20mA max input current
Voltage	-10-10V (Analog Input 1 Only), 0-10V, 0-5V, 0/24V, 30V max input
Resolution	Analog Input 1: 12-bit, <16ms response time (Uni-Polar) Analog Input 2: 12-bit, <16ms response time (Uni-Polar)
Accuracy	better than 1% of full scale
Scaling & Offset	Parameter adjustable
Impedance	Current Mode: 500R Voltage Mode: > 100kR

Analog Output Specification

Range	Current: 0...20mA, 4...20mA, 20mA max Analog: 0...10V, 0 / 24V (digital), 20mA max
Resolution	10-bit
Accuracy	better than 1% of full scale

Relay Output

Maximum Switching Voltage:	250VAC, 30 VDC
Maximum Switching Current:	5A at 30 Volt DC, 6A at 250 Volt AC

Mechanical

Vibration

When mounted, all ACS260 drive units should not be subjected to vibration levels in excess of the limits defined under EN61800-5-1.

Response Times

Command Source	Response Time
Digital Input	<8ms
Analog Input	<16ms
Modbus RTU Interface	<8ms from receipt of valid command
Power Stage	<10ms to enable output

Motor Control Performance

V/F Mode

Speed Regulation: + / - 20% of motor slip with slip compensation enabled

Vector Mode

Static Speed Accuracy	+ / - 0.033%
Speed Regulation	0 – 100% Load Range: + / - 1%
Torque Response	1- 8ms
Torque Linearity	(10 – 90% of motor rated speed, 20 – 100% load torque range): + / - 5%

Under / Over Voltage Trip Levels

The following levels are not user adjustable and define the operating voltage levels of the drive and brake chopper circuit.

Drive Rated Supply Voltage	Frame Size	Drive Type	DC Bus Voltage Level (Volts DC)				
			Brake Chopper On	Brake Chopper Off	Under Voltage Trip	Minimum Operating (Inrush Disabled)	Over Voltage Trip
380 – 480 Volts AC	R1	All	N/A	N/A	320	478	835
380 – 480 Volts AC	R2	All	780	756	320	478	835

Automatic Switching Frequency Reduction

The switching frequency selected in 2606 will be automatically reduced based on the heatsink temperature according to the data in *Maximum Permissible Heatsink Temperature*. In addition, switching frequency is reduced under the following conditions:

Output Frequency based Effective Switching Frequency Reduction

At low output frequency, Effective Switching Frequency is automatically reduced. Hysteresis is applied to prevent continuous switching. The operation is according to the following table:

2606	32kHz	24kHz	16kHz	12kHz	8kHz	4kHz
Effective Switching Frequency increases when Output Frequency exceeds	9.0Hz	7.0Hz	5.0Hz	3.0Hz	N/A	N/A
Effective Switching Frequency reduces when Output Frequency reduces below	7.0Hz	5.0Hz	3.0Hz	1.0Hz	N/A	N/A

Output Current Based Effective Switching Frequency Reduction

Effective Switching Frequency is automatically reduced based on motor load current as follows:

All ACS260-04-09A5-4 models:

- If 2606 = 12kHz, 16 kHz, 24 kHz, Effective switching frequency is reduced to 8 kHz when motor current exceeds 10.45A (110% of the drive rated current). Switching frequency will return to the value set in 2606 when motor current reduces below 7.6A (80% of drive rated current)
- If 2606 = 32kHz, Effective switching frequency is reduced to 8 kHz when motor current exceeds 10.45A (110% of drive rated current). Switching frequency changes to 24 kHz when motor current reduces below 7.6A (80% of drive rated current). Switching frequency will return to the value set in 2606 when motor current reduces below 6.7A (70% of drive rated current)

All other models:

- Effective switching frequency is reduced to 8 kHz when motor current exceeds 140% of the drive rated current. Switching frequency will return to the value set in 2606 when motor current reduces below 110% of drive rated current.

Electrical Rating Tables

Product Type ACS260-04-	Input rating	Output ratings					Frame size
		Max. current	Light-duty use		Heavy-duty use		
	I1	Imax	ILd	PLd	IHd	PHd	
	A	A	A	kW	A	kW	
380 - 480 (+ / - 10%) V 3 Phase Input, 3 Phase Output							
02A2-4	3.5	3.8	-	-	2.2	0.75	R1
04A1-4	5.6	7.1	-	-	4.1	1.5	R1
05A8-4	6.9	10.1	-	-	5.8	2.2	R2
09A5-4	10.7	16	-	-	9.5	4	R2
12A0-4	12.0	16	12.0	5.5	-	-	R2

Rating table

The following tables provide the output current rating information for the various ACS260 models. ABB Drives always recommend that selection of the correct ACS260 is based upon the motor full load *current* at the incoming supply voltage.

Cable sizes shown are the maximum possible that may be connected to the drive. Cables should be selected according to local wiring codes or regulations at the point of installation

The rated fuse currents given in the table are the maximums for the mentioned fuse types. If smaller fuse ratings are used, check that the fuse rms current rating is larger than the nominal input current. If 150% output power is needed, multiply nominal input current by 1.5.

Check that the operating time of the fuse is below 0.5 seconds. The operating time depends on the fuse type, the supply network impedance as well as the cross-sectional area, material and length of the supply cable. In case the 0.5 seconds operating time is exceeded with the gG or T fuses, ultra rapid (aR) fuses in most cases reduce the operating time to an acceptable level.

Note: Larger fuses must not be used when the input power cable is selected according to this table.

Product Type ACS260-04-	Fuse (A)	Maximum Cable Size		Maximum Motor Cable Length	Recommended Brake Resistance (Ω)	Frame Size
	gG	mm^2	AWG	Mtrs		
3-phase 380…480V AC (+/-10%) - 3 Phase Output						
02A2-4	6	2.5	14	10	N/A	R1
04A1-4	10	2.5	14	10	N/A	R1
05A8-4	10	2.5	14	10	200	R2
09A5-4	16	2.5	14	10	120	R2
12A0-4	16	2.5	14	10	100	R2

Efficiency

Energy efficiency classification and loss data for complete drive module (CDM) is identified according to IEC61800-9-2 standard.

Product Type	Frame Size	Rated Power (kW)	Rated Output Current (A)	Rated Apparent Output Power (kVA)	IE Class	0% Speed			50% Speed			90% Speed		Standby Losses
						Load			Load			Load		
						25%	50%	100 %	25%	50%	100 %	50%	100 %	
						Losses%			Losses%			Losses %		Watts
3-phase 380…480V AC (+/-10%) - 3 Phase 400V Output														
ACS260-04-02A2-4	1	0.75	2.2	1.52	IE2	1.8	2	3.3	1.9	2.3	3.3	2.4	3.5	5
ACS260-04-04A1-4	1	1.5	4.1	2.84	IE2	1	1.1	1.7	1	1.2	1.8	1.3	1.9	5
ACS260-04-05A8-4	2	2.2	5.8	4.02	IE2	1	1.3	1.5	1.1	1.4	1.8	1.5	2	8
ACS260-04-09A5-4	2	4	9.5	6.58	IE2	1.2	1.4	1.9	1.4	1.6	2.3	1.8	2.7	8.3
ACS260-04-12A0-4	2	5.5	12	8.31	IE2	0.5	0.8	1.8	0.5	0.9	1.9	1	2.1	9.9

Routine Maintenance

The drive should be included within the scheduled maintenance program so that the installation maintains a suitable operating environment.

The scheduled maintenance program should be performed every 12 months, including:

- Temperate check - Ambient temperature is within the temperature range as set out in the “Technical data-Environmental” section.
- Enclosure check - Drive is installed in the enclosure which should be free from dust and condensation.
- Wiring check - All the electrical connections tightness should be checked. All the power cables should have no signs of heat damage
- NOTE If the drive has been in storage for a period longer than 2 years, the DC link capacitors must be reformed.

Applicable Standards

EU Declaration of Conformity

We
Manufacturer: ABB Beijing Drive Systems Co., Ltd.
Address: No.1, Block D, A-10 Jiuxianqiao Beilu, Chaoyang District, Beijing 100015, P.R. China.
Phone: +86 010 58217788

Declare under our sole responsibility that the following products:

Frequency converters

ACS260-04-xxAx-4 (Frame R1, 3ph 380-480Vac)

ACS260-04-xxAx-4 (Frame R2, 3ph 380-480Vac)

are in conformity with the relevant requirements of European Union Directives, which have been notified in this single declaration that consists of individual Declarations of conformity, provided that the equipment is selected, installed and used according to given instructions.

The harmonised standards and other standards, which have been applied, are specified on the individual Declarations of conformity for particular EU directive.

EU Directives		
Low Voltage Directive	2014/35/EU	LVD
EMC Directive	2014/30/EU	EMC
RoHS Directive	2011/65/EU	RoHS
Delegated Directive (EU)	2015/863	
Ecodesign Directive	2009/125/EC	Ecodesign

Individual EU Declaration of Conformity:

Product	LVD	EMC	RoHS	Ecodesign
ACS260-04x-xxAx-4	3AXD10001238849		3AXD10001238937	3AXD10001399105

Beijing, 1 June 2021

Signed for and on behalf of:

Petri Sullstrom
Local Division Manager
ABB Beijing Drive Systems Co., Ltd.

XuMing Wang
Product Engineering and Quality Manager
ABB Beijing Drive Systems Co., Ltd.

1/1

3AXD10001238848 Rev. B

11

Options and Kits

Overview

This appendix gives details on the option kits and accessories available for the ACS260.

Remote Keypad RCRP-02

The REMOTE PANEL is designed for programming and control of the ACS260. The kit comes with a 3-meter RJ45 cable.

Part Number	Description	
RCRP-02	ACS260 Remote LED Keypad	

General Specifications

Compatible Drives:	ACS260
Signal Interface:	Standard 6-way RJ45 connector
Supply Input:	10V … 36V DC, 30mA
RS485 signal:	Industry standard 2-wire +5V differential
Environmental:	Operational 0 … 50 °C Storage -40 °C … 60 °C Relative Humidity < 95% (noncondensing)
Protection rating:	IP54
Max cable length:	20m (unscreened, total length)
	100m (screened, twisted pair, total length)

Dimensions	**Through Panel Mount**
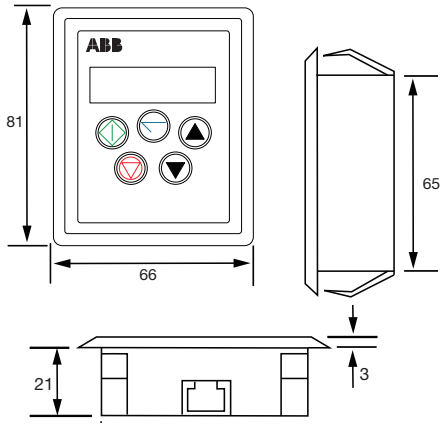	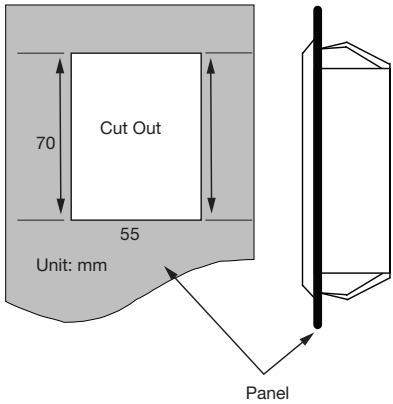

COPYSTICK2

The COPYSTICK2 is used for fast and accurate repeat drive programming.

Part Number	Description	
RCCS-02	COPYSTICK2	

USB PC Connection Kit ECS100U

The USB PC Connection Kit connects between the RJ45 port on ACS260 and a USB PC Port. This kit is used when programming the drive with the PC Software Tools.

Part Number	Description	
ECS100U	USB PC Connection Kit	

Further information

Product and service inquiries

Address any inquiries about the product to your local ABB representative, quoting the type designation and serial number of the unit in question. A listing of ABB sales, support and service contacts can be found by navigating to abb.com/searchchannels.

Product training

For information on ABB product training, navigate to new.abb.com/service/training.

Providing feedback on ABB Drives manuals

Your comments on our manuals are welcome. Navigate to new.abb.com/drives/manuals-feedback-form.

Document library on the Internet

You can find manuals and other product documents in PDF format on the Internet at abb.com/drives/documents.

abb.com/drives

3AXD50000672080B

© 2021 ABB Beijing Drive Systems Company Ltd.
Specifications subject to change without notice.

3AXD50000672080 RevB (EN) 2021-07-16