ABB INDUSTRIAL DRIVES

ACS880-607LC 3-phase dynamic brake units

Hardware manual

ACS880-607LC 3-phase dynamic brake units

Hardware manual

Table of contents

4. Electrical installation

7. Start-up

3AXD50000581627 Rev B
EN
Original instructions
EFFECTIVE: 2023-08-22

Table of contents

1 Introduction to the manual

Contents of this chapter 11
Applicability 11
Safety instructions 11
Target audience 11
Categorization by frame size and option code 12
Use of component designations 12
Quick installation flowchart 12
Related documents 13
Terms and abbreviations 14

2 Operation principle and hardware description

Contents of this chapter 15
Product overview 15
Operation principle 15
When is resistor braking necessary? 15
Overview diagram of the drive system 16
Overview drawing of the drive system 17
Layout drawings – brake module cubicle 18
Layout drawing – brake module R8i 21
  Module layout 21
  Coolant connectors 21
  Connectors X50...X59 22
  Fiber optic connectors 23
  LEDs 23
Overview of power and control connections 24
Brake unit control devices 25
  Overview of the control connections of the BCU control unit 25
  The control panel 26
  Control by PC tools 26
  Fieldbus control 26
  DC switch and charging switch 26
Type designation labels 27
  Type designation label of the brake unit 27
Type designation key 28
  Basic code 28
  Option codes 28

3 Guidelines for planning the electrical installation

Contents of this chapter 31
Limitation of liability 31
  North America 31
Generic guidelines 31
Selecting the brake resistor 32

Selecting and routing the brake resistor cables 32
Resistor cable sizes and length 32
Minimizing electromagnetic interference 32
Selecting the installation location for the brake resistors 33
Selecting the resistor thermal switch circuit cable 33
Protecting the system against thermal overload 33
Protecting the system against short-circuits 33

4 Electrical installation

Contents of this chapter 35
Electrical safety precautions 35
General notes 37
Printed circuit boards 37
Handling fiber optic cables 37
Measuring the insulation resistance of the brake resistor circuit 38
Connecting the brake resistor cables and thermal switch 39
Connection diagram 39
Connection procedure of the resistor cables 40
Removing shrouds 40
Connecting the cables 40
Installing shrouds 42
Use of fasteners in cable lug connections 43
Connection procedure of the thermal switch cable 44
Connecting the control cables 45
Control cable connection procedure 45
Grounding the outer shields of the control cables 360° at the cabinet entry . 45
Routing the control cables inside the cabinet 47
Connecting control cabling 47
Connecting a PC 49

5 The control unit

Contents of this chapter 51
General 51
BCU-x2 layout 52
Default I/O diagram of the brake control unit 54
Additional information on the connections 57
Power supply for the control unit (XPOW) 57
The X485 connector 57
Safe torque off (XSTO, XSTO OUT) 57
FSO safety functions module connection (X12) 57
SDHC memory card slot 57
Connector data 58
BCU-x2 ground isolation diagram 61

6 Installation checklist

Contents of this chapter 63
Checklist 63

7 Start-up

Contents of this chapter 65
Start-up procedure 66

8 Operating instructions

Contents of this chapter 69
Disconnecting the brake unit from the drive DC bus 69
Connecting the brake unit to the drive DC bus 69

9 Fault tracing

Contents of this chapter 71
LEDs 71
Control panel and panel platform/holder LEDs 71
Control unit LEDs 72
R8i module LEDs 72
7-segment display of the brake control unit 72
Warning and fault messages 72

10 Maintenance

Contents of this chapter 73
Maintenance intervals 73
Description of symbols 73
Recommended maintenance intervals after start-up 73
Maintenance timers and counters 75
Cabinet 75
Cleaning the interior of the cabinet 75
Cleaning the exterior of the drive 76
Fan replacement 77
Brake chopper module cubicle 77
Fan in the output cubicle, top cable entry (option +H351) 78
Brake module 79
Assembling the service platform 79
Removing the module 80
Reinstalling the module 83
Capacitors 83
Reforming the capacitors 84
Fuses 85
Replacing the brake chopper fuses 85
Replacing the resistor fuses 87
Control panel 88
Memory unit 89
Replacing the memory unit 89

11 Internal cooling circuit

Contents of this chapter 91
Applicability 91
Internal cooling system 91
Connection to a cooling unit 93
Connection to an ACS880-1007LC cooling unit 93
Connection to a custom cooling unit 93
General requirements 93
Coolant temperature control 93
Filling up and bleeding the internal cooling circuit 94
Drive line-ups with an ACS880-1007LC cooling unit 94

Drive line-ups with a custom cooling unit 94
Draining the internal cooling circuit 95
Maintenance intervals 95
Technical data 96
Coolant specification 96
Coolant type 96
Temperature limits 96
Pressure limits 98
Coolant flow rate limits 98
Cooling circuit materials 98

12 Technical data

Contents of this chapter 99
Ratings 99
Definitions 100
Derating 101
Surrounding air temperature derating 101
Coolant temperature derating 101
Antifreeze content derating 101
Altitude derating 102
Frame sizes and modules used 102
Fuses 102
DC fuses (IEC) 102
DC fuses (UL) 103
Resistor fuses (IEC and UL) 103
Dimensions, weights and free space requirements 103
Losses, cooling data and noise 104
Terminal and cable entry data for the resistor cables 104
Bottom entry and exit of cables 105
Top entry and exit of cables 107
Tightening torques 108
Electrical connections 108
Mechanical connections 108
Insulation supports 108
Cable lugs 108
Typical resistor cable sizes 108
Maximum cable length 109
Resistor connection 109
..... 109
Control unit (board) connection data 109
Auxiliary circuit current consumption 109
Energy efficiency data (ecodesign) 109
Efficiency 109
Protection classes 110
Ambient conditions 110
Materials 111
Color 111
Package 111
Disposal 112
Applicable standards 112
Markings 112

Disclaimers 113
Generic disclaimer 113
Cyber security disclaimer 113

13 Dimension drawings

Contents of this chapter 115
Brake unit with bottom exit 116
Brake unit with top exit 117

Further information

1

Introduction to the manual

Contents of this chapter

This chapter contains information on the manual.

Applicability

The manual is applicable to the cabinet-installed ACS880-607LC 3-phase brake units that form a part of an ACS880 multidrive system.

Safety instructions

Obey all safety instructions of the drive.

- Read the **complete safety instructions** before you install, commission, use or service the drive. The complete safety instructions are given in ACS880 liquid-cooled multidrive cabinets and modules safety instructions (3AXD50000048633 [English]).
- Read the warnings of the software function before you take the function in use or change its default parameter settings. Read the warnings of the parameter before you change its default setting. Refer to the firmware manual.

Target audience

This manual is intended for people who plan the installation, install, commission and do maintenance work on the drive, or create instructions for the end user of the drive concerning the installation and maintenance of the drive.

Read the manual before you work on the drive. You are expected to know the fundamentals of electricity, wiring, electrical components and electrical schematic symbols.

Categorization by frame size and option code

The frame size identifies information which concerns only a certain frame size of the drive. The frame size is shown on the type designation label. All frame sizes are listed in the technical data.

The option code (A123) identifies information which concerns only a certain optional selection. The options included in the drive are listed on the type designation label.

Use of component designations

Some device names in the manual include the component designation in brackets (for example, [Q20]). This will help you to identify the components in the circuit diagrams of the drive.

Quick installation flowchart

Task	See
Plan the electrical installation and acquire the accessories needed (cables, fuses, etc.). Check the ratings, required coolant flow, and other technical data. Select the brake resistor (if custom resistor is used).	Guidelines for planning the electrical installation (page 31) Technical data (page 99) Selecting the brake resistor (page 32)
↓	
Examine the installation site.	*ACS880 liquid-cooled multidrive cabinets mechanical installation instructions* (3AXD50000048635 [English])
↓	
Unpack and examine the drive (only intact units may be started up). Make sure that all necessary optional modules and equipment are present and correct.	*ACS880 liquid-cooled multidrive cabinets mechanical installation instructions* (3AXD50000048635 [English]) If the drive has been non-operational for more than one year, the DC link capacitors need to be reformed. See *Capacitor reforming instructions* (3BFE64059629 [English]).
↓	
Fasten the cabinet and join cabinet sections together.	*ACS880 liquid-cooled multidrive cabinets mechanical installation instructions* (3AXD50000048635 [English])
↓	
Route the resistor cables (if customer resistor is used).	Selecting and routing the brake resistor cables (page 32)
↓	
Measure the insulation of the resistor circuit (if customer resistor is used).	Measuring the insulation resistance of the brake resistor circuit (page 38)
↓	
Connect the resistor cables and thermal switch (if customer resistor is used). Connect the control cables (if customer resistor is used).	Electrical installation (page 35)
↓	
Check the installation.	Installation checklist (page 63)
↓	

Task	See
Start the brake unit up.	Start-up (page 65) *ACS880 brake control program firmware manual* (3AXD50000020967 [English])
↓	
Operate the brake unit.	Operating instructions (page 69) *ACS880 brake control program firmware manual* (3AXD50000020967 [English])

Related documents

You can find manuals on the Internet. See below for the relevant code/link. For more documentation, go to www.abb.com/drives/documents.

	Manuals for ACS880 multidrives cabinets

Terms and abbreviations

Term	Description
BCON	Type of control board
BCU	Type of control unit
BDPS	Module internal power supply board
Brake chopper	Conducts the surplus energy from the intermediate circuit of the drive to the brake resistor when necessary. The chopper operates when the DC link voltage exceeds a certain maximum limit. The voltage rise is typically caused by deceleration (braking) of a high inertia motor.
Brake chopper module	Brake chopper enclosed in a metal frame or housing. Intended for cabinet installation.
Brake resistor	Dissipates the drive surplus braking energy conducted by the brake chopper to heat
Brake unit	Brake chopper modules and the necessary auxiliary equipment, such as control electronics, fusing and cabling
CIO	I/O module for controlling cooling fans
Control unit	The part in which the control program runs.
Cubicle	One section of a cabinet-installed drive. A cubicle is typically behind a door of its own.
DC link	DC circuit between
Drive	Frequency converter for controlling AC motors
EMC	Electromagnetic compatibility
Frame, frame size	Physical size of the drive or power module
Intermediate circuit	DC circuit between rectifier and inverter
Inverter unit	Inverter module(s) under control of one control unit, and related components. One inverter unit typically controls one motor.
Multidrive	Drive for controlling several motors which are typically coupled to the same machinery. Includes one supply unit, and one or several inverter units.
Parameter	In the drive control program, user-adjustable operation instruction to the drive, or signal measured or calculated by the drive. In some (for example fieldbus) contexts, a value that can be accessed as an object. For example, variable, constant, or signal.
Supply unit	Supply module(s) under control of one control unit, and related components.
ZMU	Type of memory unit, attached to the control unit

2

Operation principle and hardware description

Contents of this chapter

This chapter describes the operation principle and construction of the brake unit.

Product overview

ACS880-607LC is a liquid-cooled cabinet-installed brake unit, which forms a part of an ACS880 multidrive system. As standard, it includes brake chopper(s). Brake resistors are external, and customer must acquire and install them separately.

Operation principle

The brake chopper handles the extra energy generated by motor during a quick deceleration. The extra energy increases the drive DC link voltage. The chopper connects the brake resistor to the DC link whenever the voltage is greater than the limit defined by the control program. Energy consumption by the resistor losses lowers the voltage until the resistor can be disconnected.

When is resistor braking necessary?

Resistor braking is necessary for high capacity braking of the motor and machinery if a regenerative drive cannot be used.

Overview diagram of the drive system

The diagram that follows shows an example of a multidrive. The supply unit connects the drive to the AC supply network. It converts the AC voltage into DC. The DC voltage is distributed through the DC bus to all inverter units and optional brake units. The inverter unit converts the DC back to AC that rotates the motor. The brake unit (optional) conveys energy to brake resistors whenever needed.

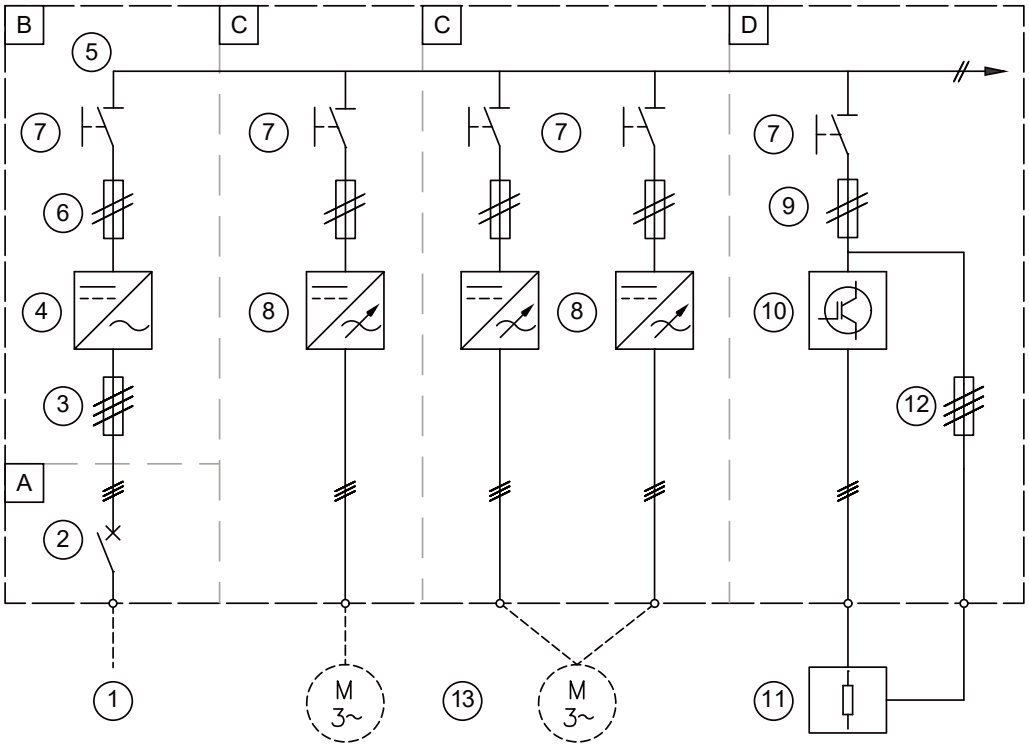

A	Incoming unit
B	Supply unit
C	Inverter unit
D	Brake unit (optional)
1	AC supply
2	Main breaker, or main contactor and main switch-disconnector
3	Input (AC) fuses
4	Supply module
5	DC bus
6	Supply and inverter module DC fuses
7	DC switch/disconnector (optional)
8	Inverter modules
9	Brake chopper fuses
10	3-phase brake chopper module (optional)
11	Brake resistors (optional or acquired by user)
12	Fuses for the brake resistors
13	Motor(s) (acquired by user)

Overview drawing of the drive system

This drawing shows an example of a drive system.

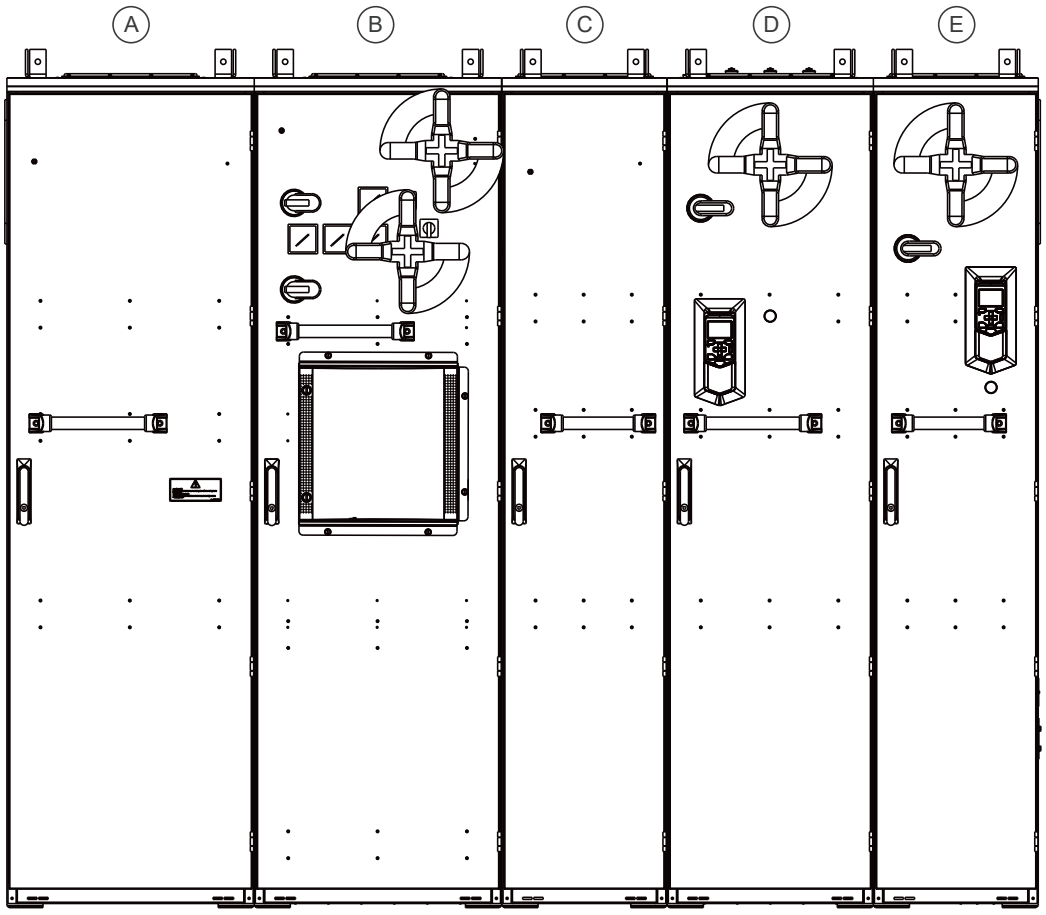

A	Auxiliary control cubicle. Contains control electronics and customer I/O connections.
B	Incoming cubicle. Contains the power input cable terminals and switchgear.
C	Diode supply unit cubicle. Contains diode supply modules.
D	Inverter unit cubicle. Contains inverter modules.
E	3-phase dynamic brake unit cubicle. Contains brake chopper modules.

Layout drawings – brake module cubicle

The drawing below shows the components of the brake chopper cubicle with bottom entry and exit of cables (shrouds removed).

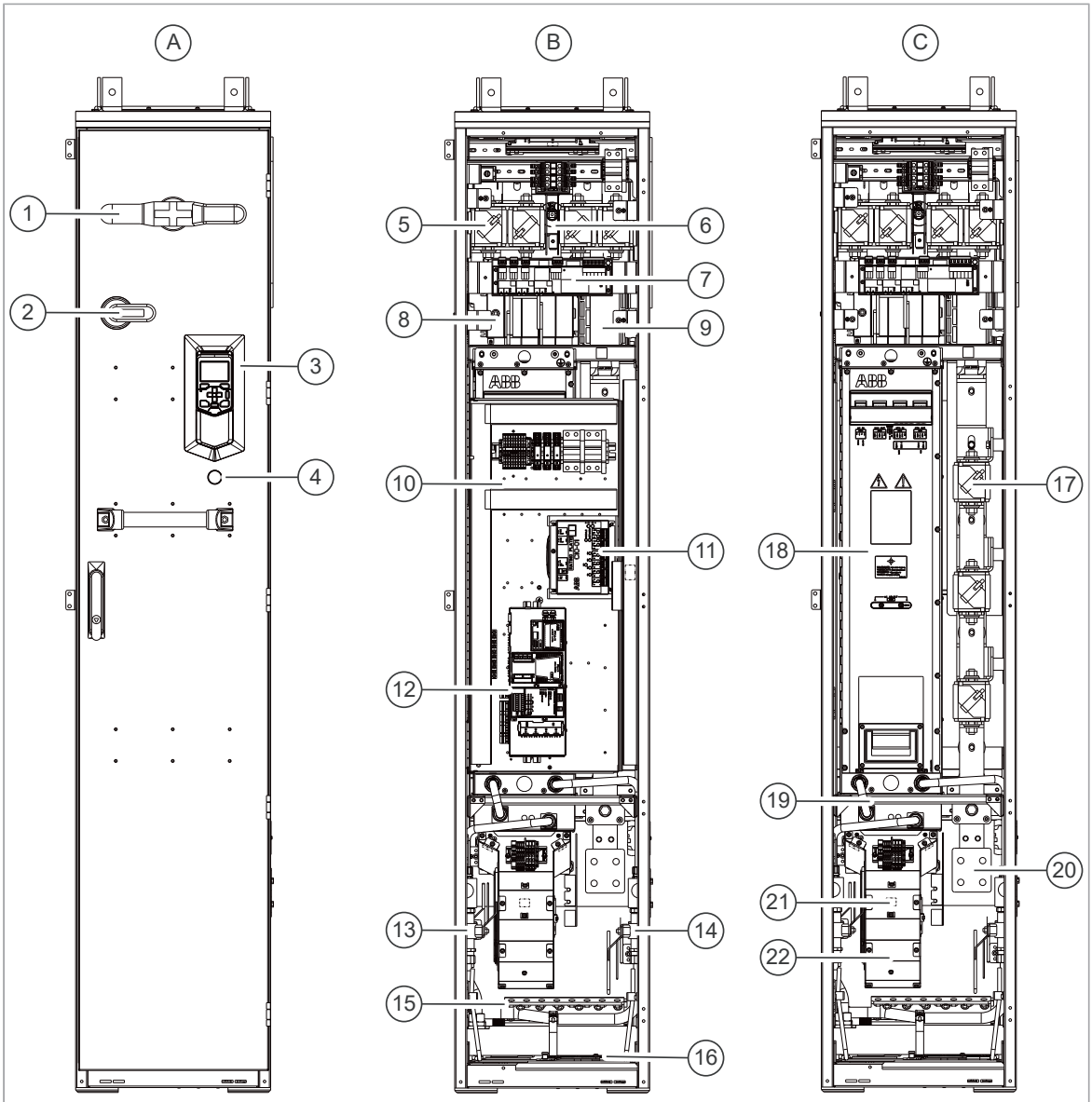

A	Door closed	11	CIO-01 I/O module for fan monitoring (A115)
B	Door open	12	BCU control unit (A41)
C	Door open, swing-out frame removed	13	Coolant inlet manifold with stop and drain valves
1	DC switch/disconnector handle (part of option +F286, Q11)	14	Coolant outlet manifold with stop and drain valves
2	Charging circuit switch fuse handle (part of option +F286, Q10)	15	PE busbar
3	Control panel (A49)	16	Cable entries
4	Indicator light (P11)	17	Brake resistor fuses (F11.xx)
5	DC fuses (F11.xx)	18	Brake chopper module (T11)
6	DC switch/disconnector (behind the fuses, part of option +F286, Q11)	19	Heat exchanger (between the module and the cooling fan)

7	Charging controller (part of option +F286, A11)	20	Incoming resistor connection busbars (R1.2, R2.2 R3.2)
8	Charging mechanics (part of option +F286)	21	Outgoing resistor connection busbars (behind cooling fan, R1.1, R2.1 R3.1)
9	Charging resistors (obscure, R10.x)	22	Cooling fan (G115)
10	Swing-out frame		

The drawing below shows the components of the brake chopper cubicles with top entry and exit of cables (shrouds removed).

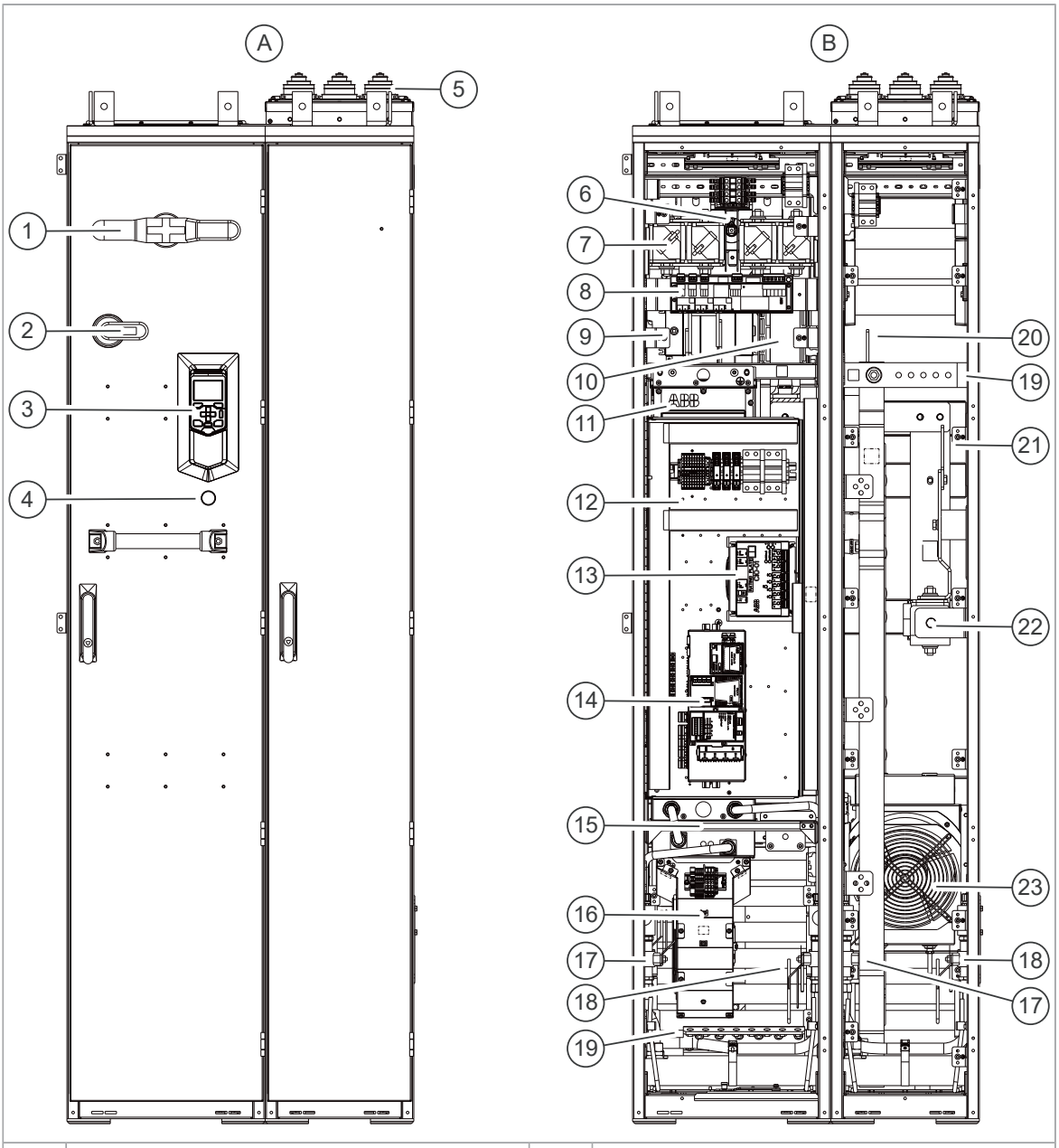

A	Doors closed	12	Swing-out frame
B	Doors open	13	CIO-01 I/O module for fan monitoring (A115)
1	DC switch/disconnector handle (part of option +F286, Q11)	14	BCU control unit (A41)
2	Charging circuit switch fuse handle (part of option +F286, Q10)	15	Heat exchanger (between the module and the cooling fan)

3	Control panel (A49)	16	Cooling fan (G115)
4	Indicator light (P11)	17	Coolant inlet manifold with stop and drain valves
5	Cable entries	18	Coolant outlet manifold with stop and drain valves
6	DC fuses (F11.xx)	19	PE busbar
7	DC switch/disconnector (behind the fuses, part of option +F286, Q11)	20	Outgoing resistor connection busbars (R1.1, R2.1 R3.1)
8	Charging controller (part of option +F286, , A11)	21	Incoming resistor connection busbars (R1.2, R2.2 R3.2)
9	Charging mechanics (part of option +F286)	22	Brake resistor fuses (F11.xx)
10	Charging resistors (obscure, R10.x)	23	Cooling fan (G115)
11	Brake chopper module (behind the swing-out frame, T11)		

Layout drawing – brake module R8i

Module layout

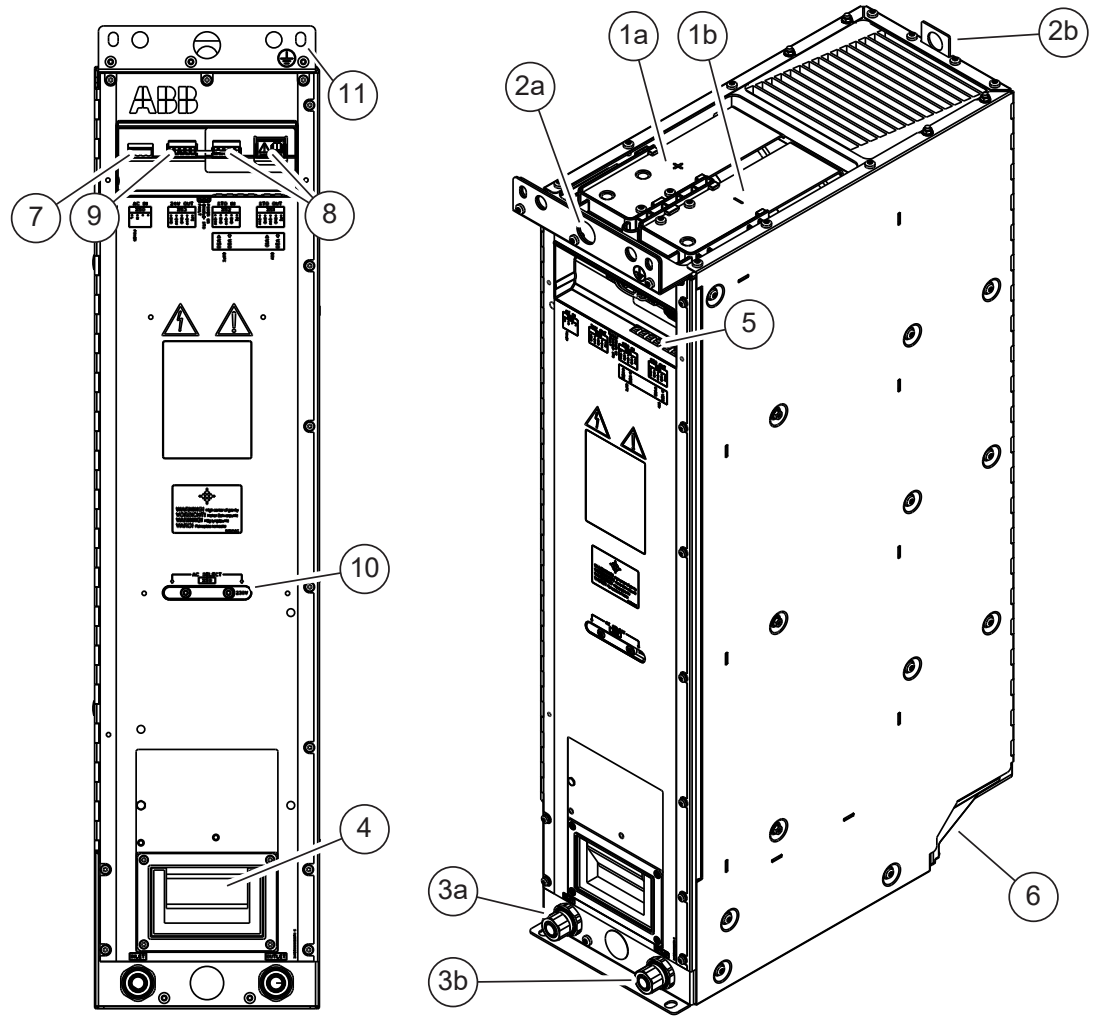

1	DC connection busbars, + (a) and - (b)
2	Lifting eyes, front (a) and back (b)
3	Coolant in (a) and out (b) connectors
4	Handle
5	Fiber optic connectors
6	Quick connector (AC connection) (the counterpart fastened to the cabinet behind the module)
7	Terminal block X50 (auxiliary power input for internal boards)
8	Terminal block X51 and X52 (Safe torque off in inverter modules only)
9	Terminal block X53 (24 V DC power output)
10	Auxiliary voltage selector X59 (115 or 230 V)
11	Unpainted fastening hole. The grounding point between module frame and cabinet frame.

Coolant connectors

The coolant pipe inlet and outlet connectors are located at the bottom front of the module. The connectors are for 16/13 millimeter PA (polyamide) pipe.

Connectors X50...X59

R8i modules contain a power supply (BDPS) that provides 24 V DC for the circuit boards of the module.

The BDPS is powered internally from the DC link.

Note: The Safe torque off (STO) safety function is only implemented in inverter units. Therefore, the STO function can not be used in supply, brake and converter units. In supply, brake and converter units, de-energizing any connection of STO IN (X52) connector stops the unit. Note that this stop in supply or brake module is not safety related and must not be used for safety function purposes.

The “24V” inputs on X52 must be connected to +24 V (on connector X53, for example) on each module. On a new module, a jumper wire set installed at the factory makes this connection.

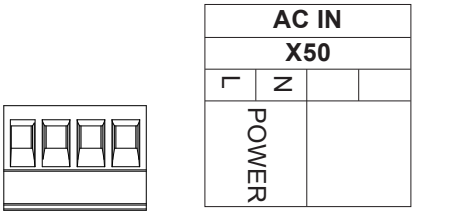

Auxiliary voltage inputs for internal power supply (BDPS)

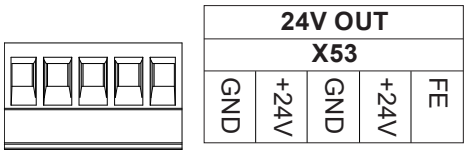

24 V DC output (for eg. BCU control unit)

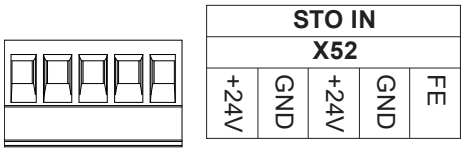

STO connectors of the module.

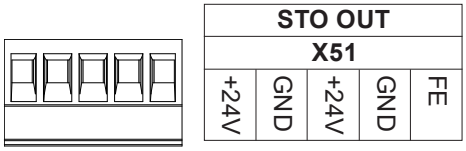

Not in use.

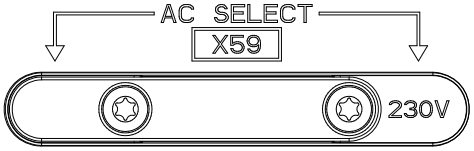

Auxiliary voltage: 230 V AC

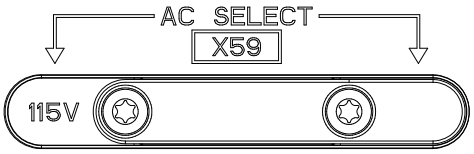

Auxiliary voltage: 115 V AC

Fiber optic connectors

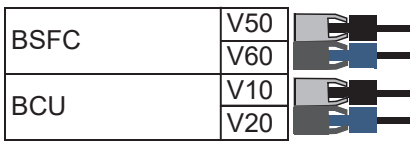

Name	Description
BSFC	Charging controller connection.
BCU	Control unit connection.

LEDs

LED	Color	Indication
FAULT	Continuous red	There is an active fault in the module.
ENABLE / STO	Continuous green	The module is ready for use.
ENABLE / STO	Continuous yellow	XSTO connectors are de-energized.
POWER OK	Continuous green	Supply voltage of the internal circuit boards is OK (> 21 V).

Overview of power and control connections

The diagram below shows the power and control connections of the brake unit consisting of one 3-phase brake module. For parallel-connected brake modules, the brake resistors are connected to each brake module also as shown below.

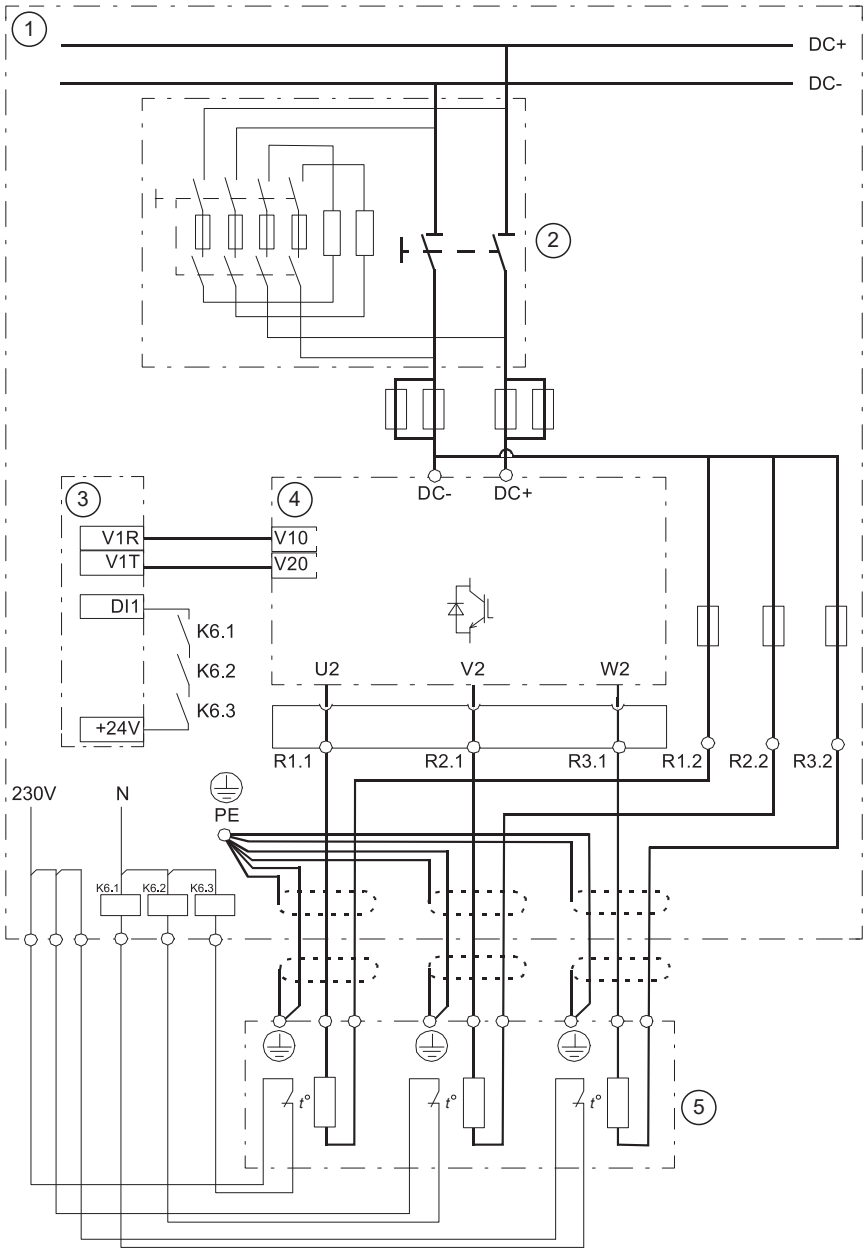

1	Brake module cubicle
2	DC switch/disconnector with charging circuit (option +F286)
3	Control unit
4	Brake module
5	Brake resistors (user-defined)

Brake unit control devices

Each brake chopper module employs a dedicated control unit (BCU) that contains the BCON board with basic I/Os and slots for optional modules. A fiber optic link connects the BCU to the brake chopper module.

Overview of the control connections of the BCU control unit

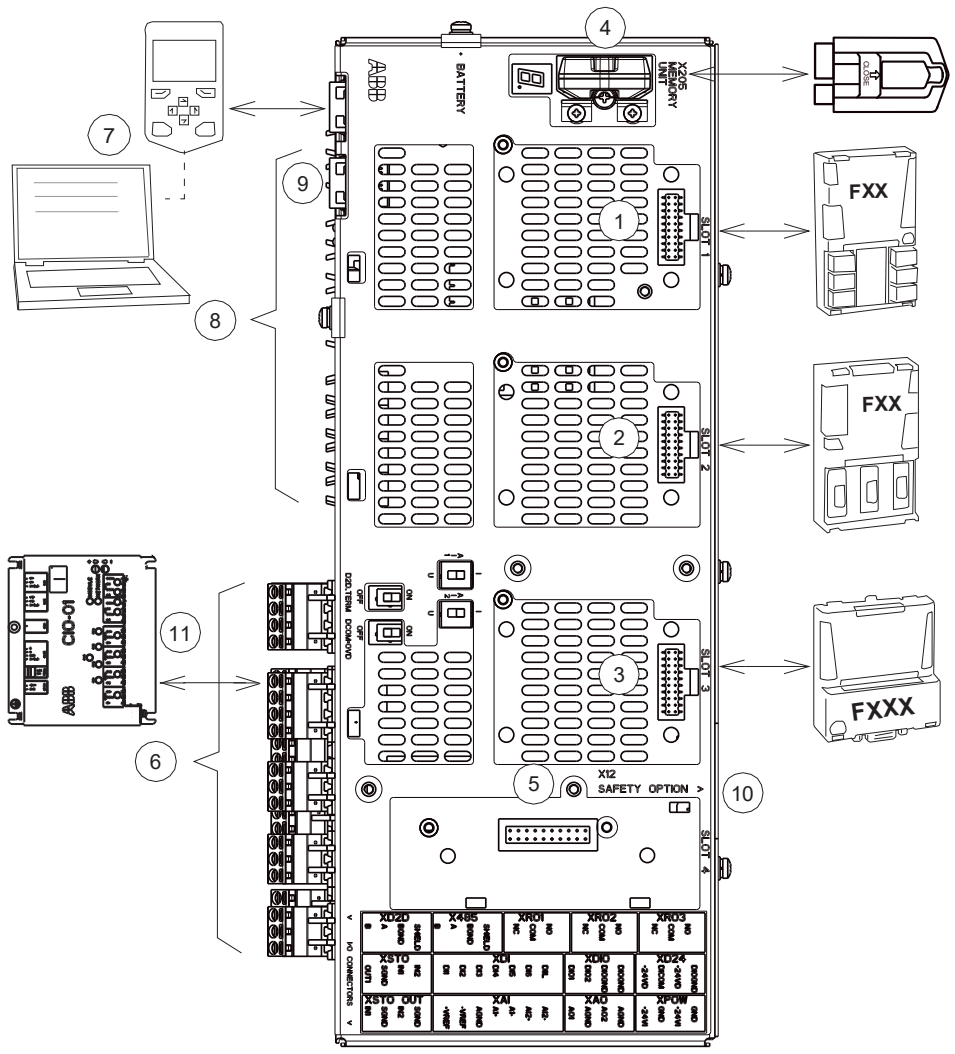

1 2 3	Analog and digital I/O extension modules and fieldbus communication modules can be inserted into slots 1, 2 and 3.	7	Control panel.
4	Memory unit	8	Fiber optic links to power modules (inverter, supply, brake or converter)
5	Slot 4 for RDCO-0x	9	Ethernet port. Not in use.
6	Terminal blocks.	10	Safety option interface. Only in use for the inverter units.
11	Distributed I/O bus with CIO-02 modules for cooling fan monitoring and control.		

The control panel

The control panel (optional) is the user interface of the brake unit, providing the essential controls such as reset, and the parameter settings for the control program.

The control panel is mounted on a platform on the brake chopper cubicle door.

For details on the control panel, see ACS-AP-I, -S, -W and ACH-AP-H, -W Assistant control panels user's manual (3AUA0000085685 [English]).

Control by PC tools

There is a USB connector on the front of the control panel that can be used to connect a PC to the drive.

Fieldbus control

The unit can be controlled through a fieldbus interface if it is equipped with an optional fieldbus adapter, and when the control program has been configured for fieldbus control by parameters. For information on the parameters, see the firmware manual.

DC switch and charging switch

DC switch/disconnector (option +F286)

The brake unit can optionally be equipped with DC switch/disconnectors which allow the isolation of the brake chopper modules from the DC bus.

The status of the DC switch/disconnector is connected to the brake control unit. By default, the run enable signal is removed when the DC switch/disconnector is open.

WARNING!
Do not open the DC switch/disconnector under load.

Charging switch

Brake units equipped with a DC switch/disconnector also have a DC link precharging circuit including a BSFC-12C charging control unit and a charging switch.

Type designation labels

A type designation label is attached onto each brake unit and brake chopper module. The type designation stated on the label contains information on the specifications and configuration of the unit. The first digits express the basic construction, for example “ACS880-607LC-0870-7”. Any optional selections are given thereafter, separated by plus signs.

Type designation label of the brake unit

An example of the brake unit label is shown below.

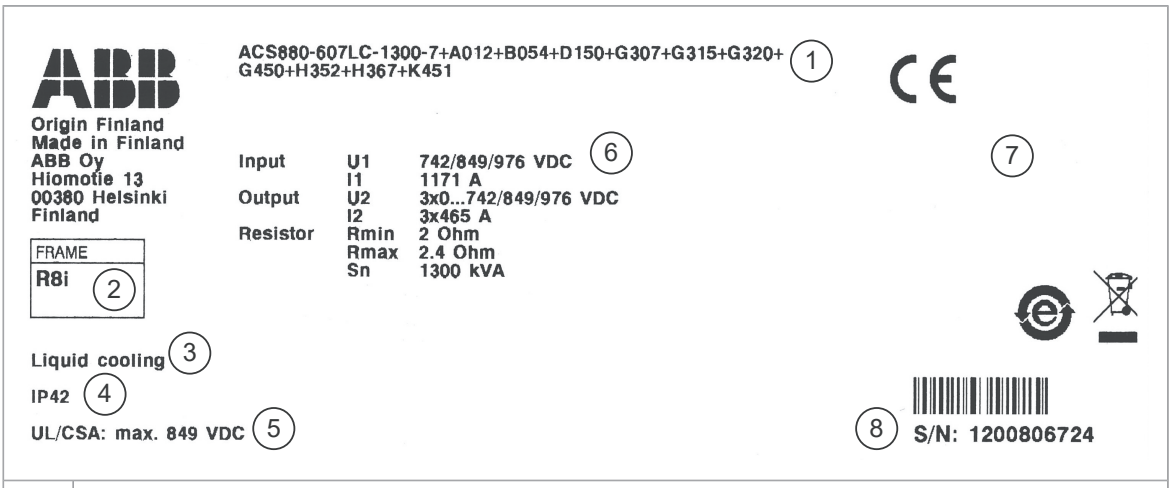

1	Type designation
2	Frame size
3	Cooling method
4	Degree of protection
5	Maximum input voltage (UL/CSA)
6	Ratings
7	Valid markings
8	Serial number. The first digit refers to the manufacturing plant. The next four digits indicate manufacturing year and week respectively (yyww). The remaining digits complete the serial number so that there are no two units with the same number.

Type designation key

Type designation describes the composition of the unit in short. The complete designation code is divided in subcodes:

- The first digits form the basic code. It describes the basic construction of the unit. The fields in the basic code are separated by hyphens.
- The plus codes follow the basic code. Each plus code starts with an identifying letter (common for the whole product series), followed by descriptive digits. The plus codes are separated by plus signs.

Basic code

Example code: ACS880-607LC-0870-7

Code	Description
ACS880	Product series
607LC	Cabinet-installed liquid-cooled brake unit. IP42 (UL Type 1), IEC industrial cabinet construction, EN/IEC approved components, speed-controlled module cooling fans, DC busbar material copper, standard wiring material, ACS-AP-W assistant control panel, ACS880 brake unit control program, coated circuit boards, bottom cable entry, lead-through-type cable entries, multilingual door device label sticker, complete documentation in English in a USB memory stick.
0870	Size. See the rating table in the technical data.
7	709…976 V DC. This is indicated in the type designation label as typical input voltage levels 742 / 849 / 976 V DC (849 V DC UL, CSA).

Option codes

Code	Description
A012	50 Hz supply frequency
A013	60 Hz supply frequency
B054	IP42 (UL Type 1 Filtered)
B055	IP54 (UL Type 12)
C121	Marine construction
C164	Plinth height 100 mm
C176	Door hinges on left
C179	Plinth height 200 mm
C205	Marine product certification issued by DNV GL
C206	Marine product certification issued by the American Bureau of Shipping (ABS)
C207	Marine product certification issued by Lloyd's Register (LR)
C209	Marine product certification issued by Bureau Veritas
C228	Marine product certification issued by China Classification Society (CCS)
C229	Marine product certification issued by Russian Maritime Register of Shipping (RS)
D150	Brake choppers
F286	DC switch-disconnector
G300	Cabinet and module heating elements (external supply)
G301	Cabinet lighting
G304	Control (auxiliary) voltage 115 V AC

Code	Description
G314	Aluminum busbars
G315	Tin-plated copper DC busbars
G320	Control (auxiliary) voltage 230 V AC
G330	Halogen-free wiring and materials
G338	Wire marking class A1
G339	Wire marking class A2
G340	Wire marking class A3
G341	Wire marking class B1
G342	Wire marking class C1
G450	External supply voltage for fans
G451	Voltage transformer for fans (internal supply)
H352	Power cabling exit from bottom
H353	Power cabling exit from top
H358	Cable gland plates (3 mm steel, undrilled)
H364	Cable gland plates (3 mm aluminum, undrilled)
H365	Cable gland plates (6 mm brass, undrilled)
H367	Control cabling through floor of cabinet
H368	Control cabling through roof of cabinet
H394	Cable entry, Roxtec frame without sealing components
J400	ACS-AP-W control panel (with Bluetooth)
J410	Control panel mounting platform
J412	Common control panel
K450	Panel bus (control of several units from one control panel)
K451	FDNA-01 DeviceNet™ adapter module
K452	FLON-01 LonWorks® adapter module
K454	FPBA-01 PROFIBUS DP® adapter module
K457	FCAN-01 CANopen® adapter module
K458	FSCA-01 RS-485 (Modbus/RTU) adapter module
K462	FCNA-01 ControlNet™ adapter module
K469	FECA-01 EtherCAT® adapter module
K470	FEPL-02 Ethernet POWERLINK adapter module
K475	FENA-21 Ethernet adapter module for EtherNet/IP™, Modbus TCP and PROFINET IO protocols, 2-port
K480	Ethernet switch for PC tool or control network (for max. 6 inverter units)
K483	Ethernet switch with optical link for PC tool or control network (for max. 6 inverter units)
K490	FEIP-21 Ethernet adapter module for EtherNet/IP™
K491	FMBT-21 Ethernet adapter module for Modbus TCP
K492	FPNO-21 Ethernet adapter module for PROFINET IO
K493	Ethernet switch for PROFINET
K494	Ethernet switch with optical link for PROFINET
L500	FIO-11 analog I/O extension module
L501	FIO-01 digital I/O extension module

Code	Description
L509	RDCO-04 optical DDCS communication for BCU control unit (4xTransmitter/Receiver)
L525	FAIO-01 analog I/O extension module
L526	FDIO-01 digital I/O extension module
N8010	IEC 61131-3 application programmability
P913	Special color (RAL Classic)
P966	Special color (other than RAL Classic)
Q986	FSPS-21 PROFIsafe safety functions module
R700	Printed manuals in English
R701	Printed manuals in German[1)]
R702	Printed manuals in Italian[1)]
R705	Printed manuals in Swedish[1)]
R706	Printed manuals in Finnish[1)]
R707	Printed manuals in French[1)]
R708	Printed manuals in Spanish[1)]
R711	Printed manuals in Russian[1)]
R712	Printed manuals in Chinese[1)]
R716	Hard copies of documentation
R717	Second set of hard copies of documentation

1) The delivery can include manuals in English if the requested language is not available.

3

Guidelines for planning the electrical installation

Contents of this chapter

This chapter contains instructions on selecting, placing and protecting the brake circuit components and cables.

Limitation of liability

The installation must always be designed and made according to applicable local laws and regulations. ABB does not assume any liability whatsoever for any installation which breaches the local laws and/or other regulations. Furthermore, if the recommendations given by ABB are not followed, the drive may experience problems that the warranty does not cover.

North America

Installations must be compliant with NFPA 70 (NEC)[1] and/or Canadian Electrical Code (CE) along with state and local codes for your location and application.

[1] National Fire Protection Association 70 (National Electric Code).

Generic guidelines

See ACS880 liquid-cooled multidrive cabinets and modules electrical planning instructions (3AXD50000048634 [English]) for the generic guidelines for planning the electrical installation (selecting cables, routing cables, etc.).

Selecting the brake resistor

WARNING!
ABB is not responsible for user resistor selection or protection of the resistor.

Select the resistor according to the resistor specification given in the technical data. In addition, consider the following:

- Each output of the brake chopper module must feed a resistor of its own. There are 3 outputs in the 3-phase brake chopper module.
- The resistance (*R*) of the brake resistor must be equal to or above the value specified. Never use resistance values below the specified value.
- The brake resistor must withstand the specified brake cycles.
- The ventilation of the space/room in which the brake resistor is located must meet the air flow amounts specified.
- The resistor must be equipped with a thermal switch (temperature sensor).

WARNING!
IEC 60664 and IEC 61800-5-1 require double or reinforced insulation between resistor live parts and the temperature sensor. If the resistor assembly does not fulfill the requirement, the temperature sensor must be isolated from the I/O terminals, for example, with a suitable relay.

Selecting and routing the brake resistor cables

Resistor cable sizes and length

See Typical resistor cable sizes.

Minimizing electromagnetic interference

Make sure that the installation is compliant with the EMC requirements. Obey these rules in order to minimize electromagnetic interference caused by the rapid voltage and current changes in the resistor cables:

- Shield the brake resistor cable. Use shielded cable or a metallic enclosure. If you use unshielded single-core cables, route them inside a cabinet that efficiently suppresses the radiated emissions.
- Install the cables away from other cable routes.
- Avoid long parallel runs with other cables. The minimum parallel cabling separation distance is 0.3 meters (1 ft).
- Cross the other cables at 90° angles.
- Keep the cable as short as possible in order to minimize the radiated emissions and stress on the brake chopper. The longer the cable the greater the radiated emissions, inductive load and voltage peaks over the IGBT semiconductors of the brake chopper.

Selecting the installation location for the brake resistors

Protect the open (IP00) brake resistors against contact. Install the brake resistor in a place where it cools effectively. Arrange the cooling of the resistor so that:

- no danger of overheating is caused to the resistor or nearby materials, and
- the temperature of the space that the resistor is in does not go above the allowed maximum value.

WARNING!
The materials near the brake resistor must be non-flammable. The surface temperature of the resistor is high. Air flowing from the resistor is of hundreds of degrees Celsius. If the exhaust vents are connected to a ventilation system, make sure that the material withstands high temperatures. Protect the resistor against contact.

Selecting the resistor thermal switch circuit cable

Make sure that the cable in the resistor thermal switch circuit meets the following requirements:

- shielded cable
- rated operating voltage between a core and ground > 750 (U_0)
- insulation test voltage > 2.5 kV
- jacket material for at least 90 °C (194 °F). Take into account further requirements due to resistor construction and temperature.

Protecting the system against thermal overload

The brake control program includes a resistor and resistor cable thermal protection function, which can be tuned by the user. The brake chopper protects itself and the resistor cables against thermal overload. Make sure that the resistor assembly is equipped with a thermal switch, which is wired to disable the chopper (and/or switch off the supply to the drive) in case of overtemperature.

For more information on the thermal protection function, see the appropriate firmware manual.

Protecting the system against short-circuits

The brake unit is equipped with fuses as standard.

The fuses protect the brake chopper, the brake resistor and the brake circuit cables in a short-circuit situation.

4

Electrical installation

Contents of this chapter

This chapter contains instructions on wiring the brake units.

Electrical safety precautions

These electrical safety precautions are for all personnel who do work on the drive, motor cable or motor.

WARNING!
Obey these instructions. If you ignore them, injury or death, or damage to the equipment can occur.

If you are not a qualified electrical professional, do not do installation or maintenance work.

Do these steps before you begin any installation or maintenance work.

1. Clearly identify the work location and equipment.
2. Disconnect all possible voltage sources. Make sure that re-connection is not possible. Lock out and tag out.
   - Open the main disconnecting device of the drive.
   - Open the charging switch if present.
   - Open the disconnector of the supply transformer. (The main disconnecting device in the drive cabinet does not disconnect the voltage from the AC input power busbars of the drive cabinet.)
   - If the drive is equipped with a DC/DC converter unit (optional) or a DC feeder unit (optional): Open the DC switch-disconnector ([Q11], option +F286 or +F290) of the unit. Open the disconnecting device of the energy storage connected to the unit (outside the drive cabinet).

- Open the auxiliary voltage switch-disconnector (if present), and all other possible disconnecting devices that isolate the drive from dangerous voltage sources.
- In the liquid cooling unit (if present), open the switch-disconnector of the cooling pumps.
- If you have a permanent magnet motor connected to the drive, disconnect the motor from the drive with a safety switch or by other means.
- Disconnect all dangerous external voltages from the control circuits.
- After you disconnect power from the drive, always wait 5 minutes to let the intermediate circuit capacitors discharge before you continue.

3. Protect any other energized parts in the work location against contact.
4. Take special precautions when close to bare conductors.
5. Measure that the installation is de-energized. Use a quality voltage tester. If the measurement requires removal or disassembly of shrouding or other cabinet structures, obey the local laws and regulations applicable to live working (including – but not limited to – electric shock and arc protection).
   - Before and after you measure the installation, verify the operation of the voltage tester on a known voltage source.
   - Make sure that the voltage between the drive input power terminals (L1, L2, L3) and the grounding (PE) busbar is zero.
   - Make sure that the voltage between the drive output terminals (T1/U, T2/V, T3/W) and the grounding (PE) busbar is zero.

     Important! Repeat the measurement also with the DC voltage setting of the tester. Measure between each phase and ground. There is a risk of dangerous DC voltage charging due to leakage capacitances of the motor circuit. This voltage can remain charged for a long time after the drive power-off. The measurement discharges the voltage.
   - Make sure that the voltage between the drive DC terminals (UDC+ and UDC-) and the grounding (PE) terminal is zero. In cabinet-built drives, measure between the drive DC busbars (+ and -) and the grounding (PE) busbar.

WARNING!
The busbars inside the cabinet of liquid-cooled drives are partially coated. Measurements made through the coating are potentially unreliable, so only measure at uncoated portions. Note that the coating does not constitute a safe or touch-proof insulation.

6. Install temporary grounding as required by the local regulations.
7. Ask for a permit to work from the person in control of the electrical installation work.

General notes

Printed circuit boards

WARNING!
Use a grounding wristband when you handle printed circuit boards. Do not touch the boards unnecessarily. The boards contain components sensitive to electrostatic discharge.

Handling fiber optic cables

WARNING!
Obey these instructions. If you ignore them, damage to the equipment can occur.

- Handle the fiber optic cables with care.
- When you unplug the fiber optic cables, always hold the connector, not the cable itself.
- Do not touch the ends of the fibers with bare hands as the ends are extremely sensitive to dirt.
- Do not bend the fiber optic cables too tightly. The minimum allowed bend radius is 35 mm (1.4 in).

Measuring the insulation resistance of the brake resistor circuit

WARNING!
Obey the safety instructions of the drive. If you ignore them, injury or death, or damage to the equipment can occur. If you are not a qualified electrical professional, do not do installation, commissioning or maintenance work.

1. Stop the drive and do the steps in section Electrical safety precautions (page 35) before you start the work.
2. Make sure that the resistor cable is connected to the resistor and disconnected from the drive output terminals.
3. At the drive end, connect the R+ and R- conductors of the resistor cable together. Measure the insulation resistance between the conductors and the PE conductor with a measuring voltage of 1000 V DC. The insulation resistance must be more than 1 Mohm.

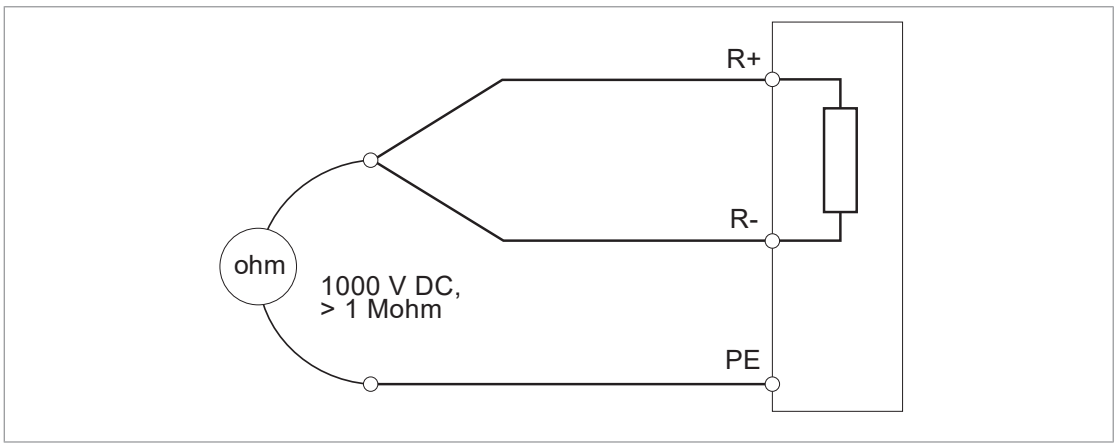

Connecting the brake resistor cables and thermal switch

Connection diagram

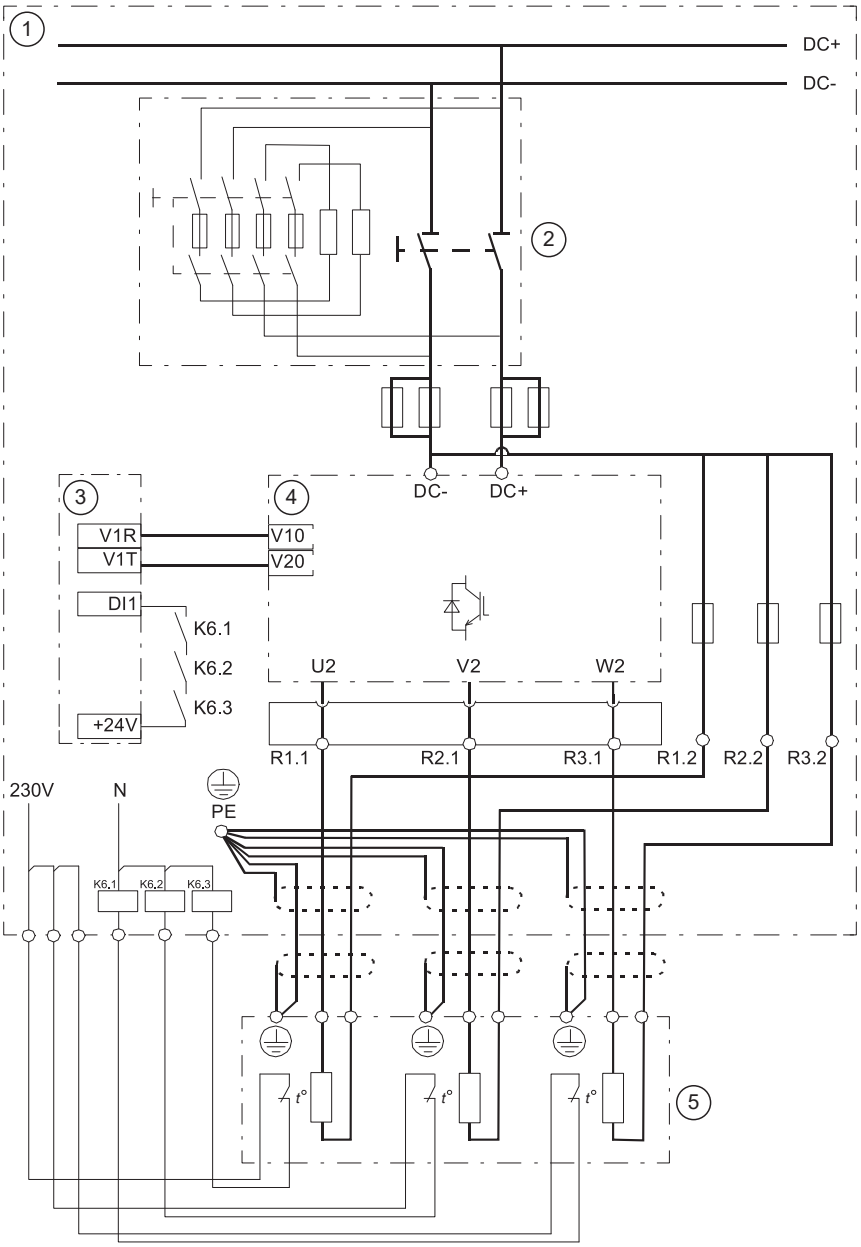

1	Brake chopper cubicle
2	DC switch/disconnector including charging circuit (+F286)
3	Control unit
4	Brake chopper module
5	Brake resistor assembly

This diagram shows the brake resistor cable connections and an example connection of the thermal switches.

The diagram also shows the internal connections of the brake chopper module cubicle done by ABB.

Connection procedure of the resistor cables

WARNING!
Obey the safety instructions of the drive. If you ignore them, injury or death, or damage to the equipment can occur. If you are not a qualified electrical professional, do not do installation, commissioning or maintenance work.

Removing shrouds

1. Stop the drive and do the steps in section Electrical safety precautions before you start the work.
2. Open the door of the incoming cubicle.
3. Remove the shrouding and assembly plates covering the input terminals.

Connecting the cables

This section describes the power cable connecting procedure for a bottom cable entry with the standard cable entry plate. The standard cable entry plate has conductive sleeves for the 360 degree grounding of the cable shields. If the drive or unit has another type of cable entry plate, such as a Roxtec cable entry plate (option +H394), or cable gland plate (option +H358), refer also to the instruction of the related non-ABB installation accessories. For example, refer to the Roxtec instructions or the instructions by the cable gland manufacturer.

1. IP54 cabinet: Remove the rear horizontal cable support bracket and the cable entry plate.
2. IP54 cabinet: Remove a sealing grommet from the cable entry plate for each cable. Cut hole into the rubber grommet and slide it onto the cable.

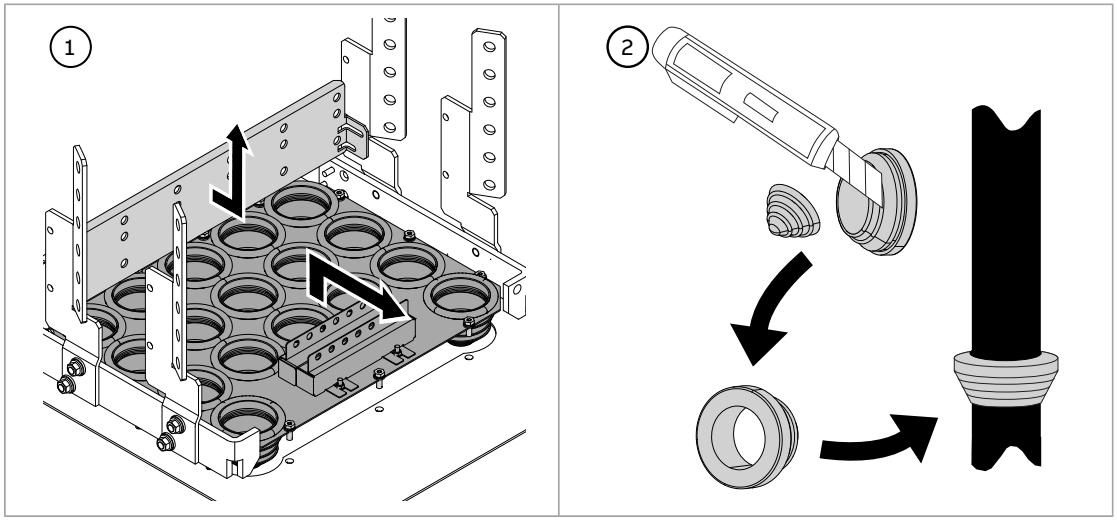

3. Lead the cables inside the cabinet through the cable entry plate. If there are several cables, use the rear 3 holes first.
   IP54 cabinet: Attach the sealing grommets to the cable entry plate. Attach also the cable entry plate, and the cable support bracket.

4. For each cable, strip off 3…5 cm (1.2 … 2 inches) of the outer insulation above the cable entry plate. Strip also the end of the cable, and the end of the phase conductors. Twist the shield to form a PE conductor, and mark it with yellow-green tape or heat-shrink tubing.
5. For each cable, attach cable lugs at the end of the PE conductor (twisted shield) and phase conductors.

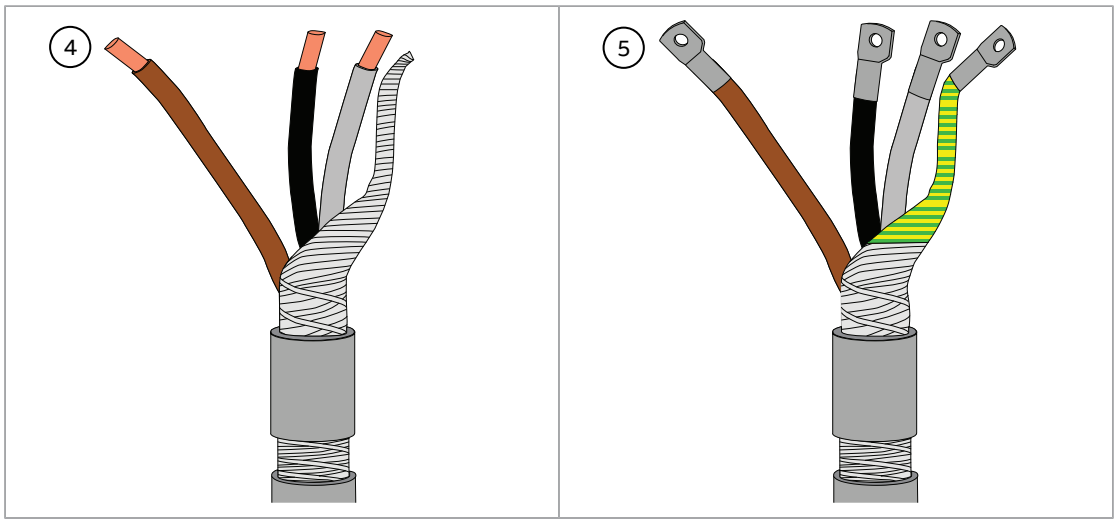

WARNING!
Apply grease to stripped aluminum conductors before you attach them to non-coated aluminum cable lugs. Obey the grease manufacturer's instructions. Aluminum-aluminum contact can cause oxidation in the contact surfaces.

6. For each cable, attach the conductive sleeve to the bare cable shield with a cable tie. Attach the cable to the support bracket with a clamp.
7. For each cable, connect the PE conductor to the PE busbar, and two phase conductors to the phase terminals. Connect the third phase conductor to the PE busbar. Tighten the screws to the torque given in the technical data. Use the bolts and washers in the delivery. Refer to Use of fasteners in cable lug connections (page 43).

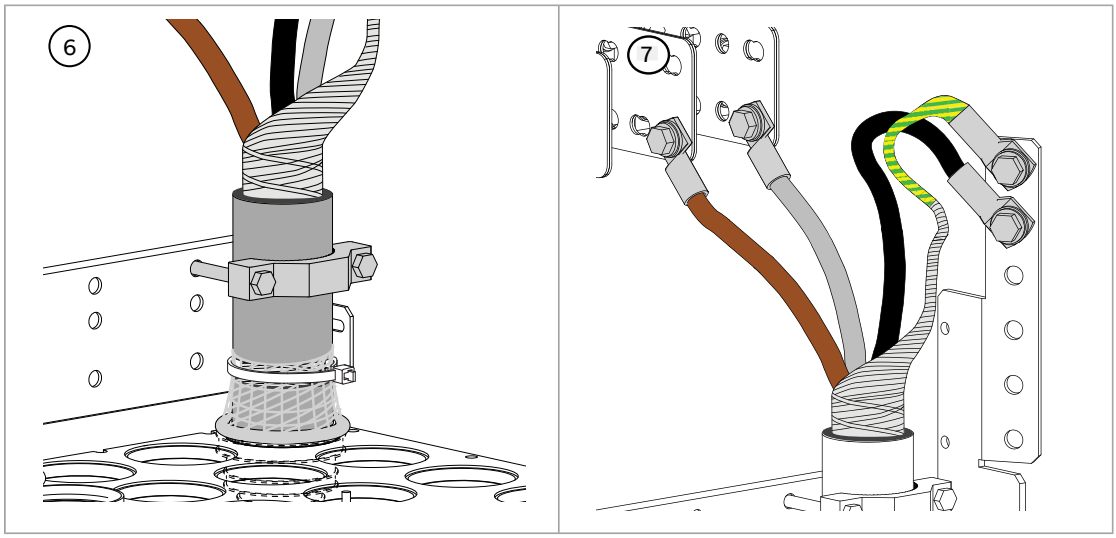

8. If there are more than 3 cables, attach additional cable support brackets for them.

Installing shrouds

1. Install the thermal switch cable. Refer to section Connection procedure of the thermal switch cable.
2. Install the shrouding removed earlier.
3. Close the cubicle door.

Use of fasteners in cable lug connections

Use the bolts, nuts and washers delivered with the drive. Install all the fasteners in the correct order. See the figure below. Tighten the cable lug to the torque specified for the connection.

Cable lug on one side of the busbar

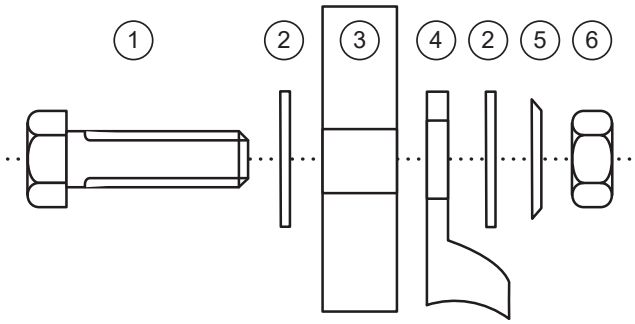

Cable lugs on both sides of the busbar

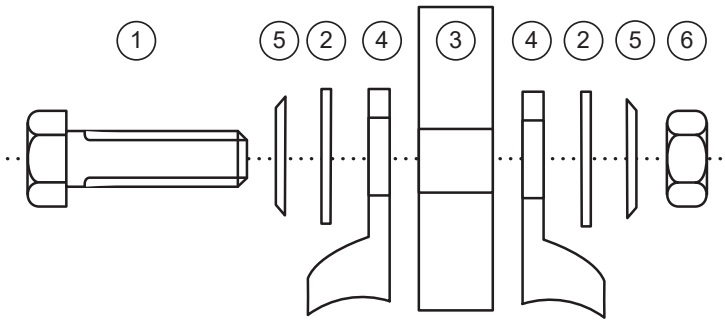

1	Bolt	4	Cable lug
2	Plain washer	5	Spring washer
3	Busbar	6	Nut

Connection procedure of the thermal switch cable

WARNING!
Obey the safety instructions of the drive. If you ignore them, injury or death, or damage to the equipment can occur. If you are not a qualified electrical professional, do not do installation, commissioning or maintenance work.

1. Stop the drive and do the steps in section Electrical safety precautions (page 35) before you start the work.
2. Open the door and remove the shroud (if not yet done). Refer to section Removing shrouds. Run the sensor cable inside the brake unit cubicle.
3. ABB recommends that you ground the cable shield 360° at the cable entry. Refer to section Connecting the control cables.
4. Run the cable to its connection point using existing trunking wherever possible. Protect the cables against any sharp edges or hot surfaces.
5. Connect the conductors to the appropriate terminals.
6. Twist the cable shield into a bundle, crimp a ring terminal onto it and connect it to the nearest chassis grounding point. At the other end of the cable, leave the shields unconnected or ground them via a capacitor (eg. 3.3 nF / 630 V).

Connecting the control cables

See the control unit chapter for the default I/O connections. Note that the default I/O connections can be affected by some options. See the circuit diagrams delivered with the drive for the actual wiring.

Control cable connection procedure

WARNING!
Obey the safety instructions given in ACS880 liquid-cooled multidrive cabinets and modules safety instructions (3AXD50000048633 [English]). If you ignore the safety instructions, injury or death, or damage to the equipment can occur.

If you are not a qualified electrical professional, do not do installation or maintenance work.

1. Stop the drive (if running) and do the steps in section Electrical safety precautions (page 35) before you start the work.
2. Run the control cables into the cabinet as described in section Grounding the outer shields of the control cables 360° at the cabinet entry (page 45) below.
3. Route the control cables as described in section Routing the control cables inside the cabinet (page 47).
4. Connect the control cables as described in section Connecting control cabling (page 47).

Grounding the outer shields of the control cables 360° at the cabinet entry

Ground the outer shields of all control cables 360° with the EMI conductive cushions at the cabinet entry. The grounding principle is the same for top and bottom entry cables. The illustrations show the bottom entry. The actual design details can vary.

1. If necessary, remove the shrouding in front of the cable entry.
2. Put the cables in sequence from the smallest to the largest. This will help to achieve a good contact with the cushions.
3. Loosen the tightening bolts of the EMI conductive cushions and pull them apart.
4. Cut holes in the grommets and put the cables through the grommets.
5. Peel the insulation from the part of the cable that will be in contact with the EMI conductive cushion.
6. Put the cables between the cushions and attach them with cable ties for strain relief.
7. Move the cushions back together.
8. Tighten the bolts to make sure that the EMI conductive cushions press tightly around the peeled part of the cables.

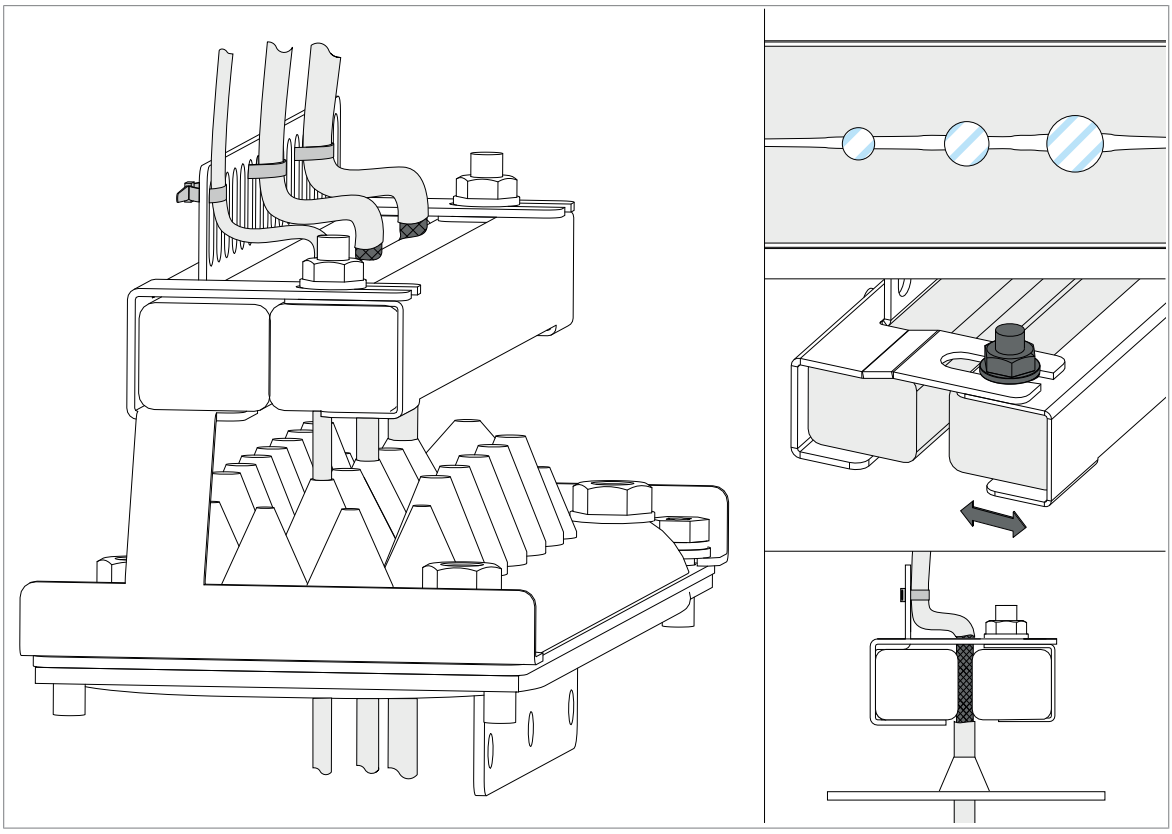

If the outer surface of the shield is non-conductive:

- Cut the shield at the midpoint of the peeled part. Be careful not to cut the conductors or the grounding wire.
- Turn the conductive side of the shield inside out over the insulation.
- Cover the exposed shield and the peeled cable with copper foil to keep the shielding continuous.

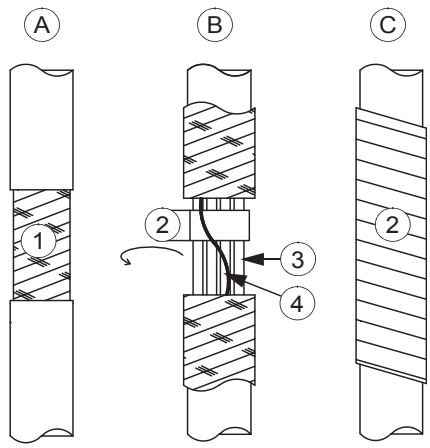

A	Stripped cable
B	Conductive surface of the shield exposed
C	Stripped part covered with copper foil
1	Cable shield
2	Copper foil
3	Shielded twisted pair
4	Grounding wire

Routing the control cables inside the cabinet

Use the existing trunking in the cabinet where possible. Use sleeving if cables are laid against sharp edges. When running cables to or from a swing-out frame, leave enough slack at the hinge to allow the frame to open fully.

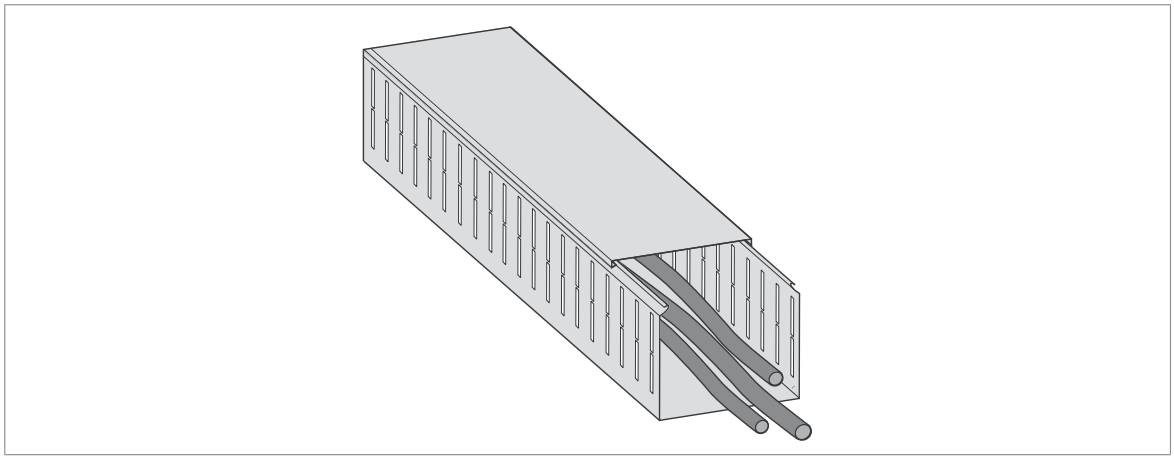

Connecting control cabling

Connect the conductors to the appropriate terminals. Refer to the wiring diagrams delivered with the drive.

Obey these instructions:

- Connect the inner twisted pair shields and all separate grounding wires to the grounding clamps near the terminals.
- Ground the outer shield of the cable at the cable entry, not at the grounding clamps near the terminals.
- Keep any signal wire pairs twisted as close to the terminals as possible. Twisting the wire with its return wire reduces disturbances caused by inductive coupling.
- At the other end of the cable, leave the shields unconnected or ground them indirectly via a high-frequency capacitor with a few nanofarads, eg. 3.3 nF / 630 V. The shield can also be grounded directly at both ends if they are in the same ground line with no significant voltage drop between the end points.

The drawing below represents the grounding of the control cabling when connecting to a terminal block inside the cabinet. The grounding is done in the same way when connecting directly to a component such as the control unit.

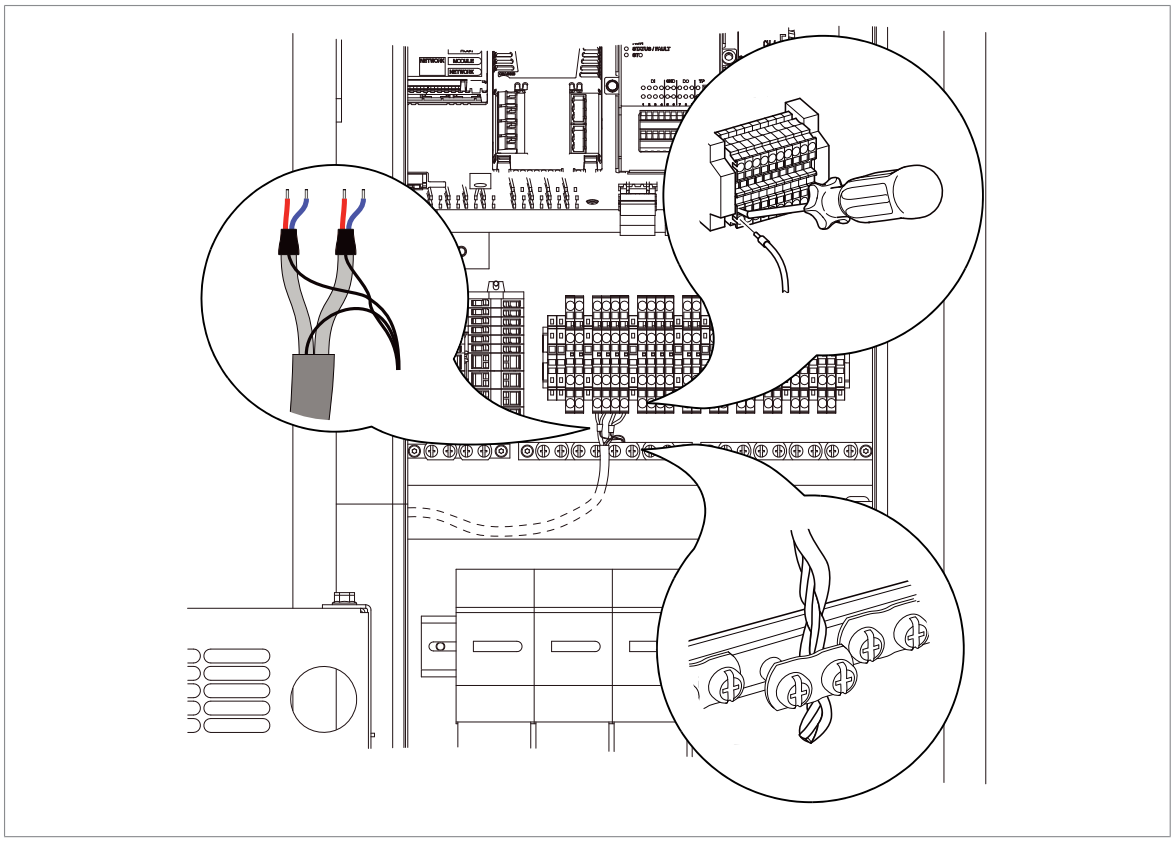

Connecting a PC

WARNING!
Do not connect the PC directly to the control panel connector of the control unit. It can cause damage.

A PC (with, for example, the Drive composer PC tool) can be connected as follows:

1. To connect a control panel to the unit, either
   - insert the control panel into the panel holder or platform, or
   - use an Ethernet (eg, Cat 5e) networking cable.
2. Remove the USB connector cover on the front of the control panel.
3. Connect an USB cable (Type A to Type Mini-B) between the USB connector on the control panel (3a) and a free USB port on the PC (3b).
4. The panel will display an indication whenever the connection is active.
5. See the documentation of the PC tool for setup instructions.

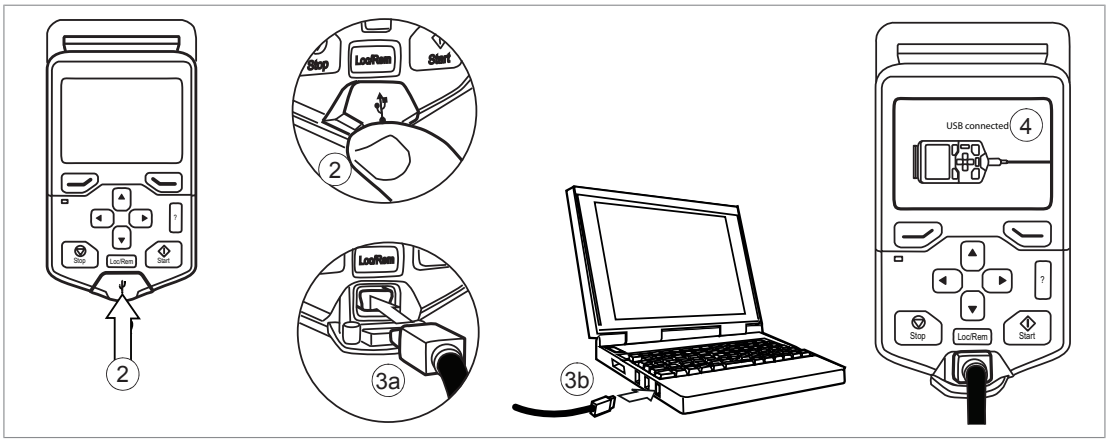

5

The control unit

Contents of this chapter

This chapter

- describes the connections of the control unit
- contains the specifications of the inputs and outputs of the control unit.

General

Each brake module is controlled by a dedicated BCU control unit. The control unit consists of a BCON-12 control board (and a BIOC-01 I/O connector board and power supply board) built in a metal housing. The control unit is connected to the brake module by fiber optic cables.

BCU-x2 layout

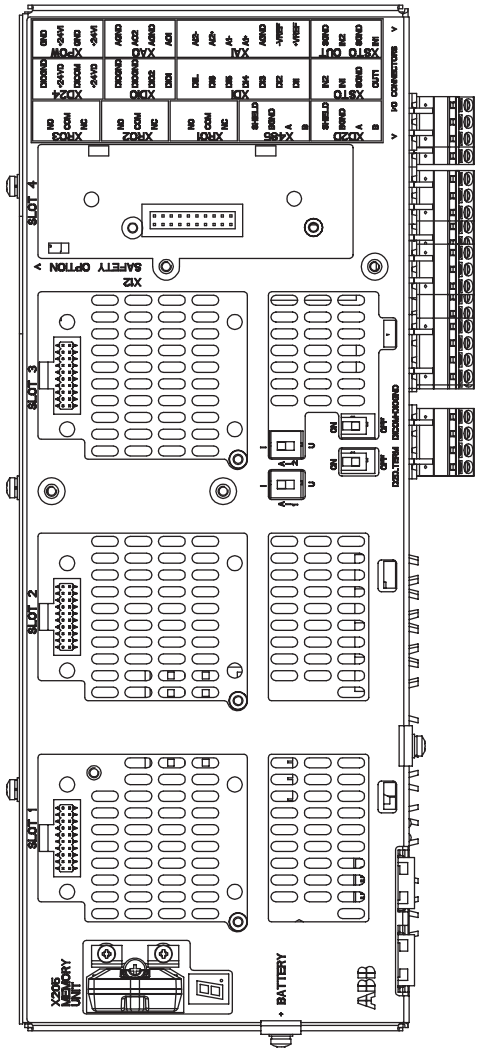

	Description
I/O	I/O terminals (see following diagram)
SLOT 1	I/O extension, encoder interface or fieldbus adapter module connection. (This is the sole location for an FDPI-02 diagnostics and panel interface.)
SLOT 2	I/O extension, encoder interface or fieldbus adapter module connection
SLOT 3	I/O extension, encoder interface, fieldbus adapter or FSO safety functions module connection
SLOT 4	RDCO-0x DDCS communication option module connection
X205	Memory unit connection
BATTERY	Holder for real-time clock battery (BR2032)
AI1	Mode selector for analog input AI1 (I = current, U = voltage)
AI2	Mode selector for analog input AI2 (I = current, U = voltage)
D2D TERM	Termination switch for drive-to-drive link (D2D)
DICOM= DIOGND	Ground selection. Determines whether DICOM is separated from DIOGND (ie. the common reference for the digital inputs floats). See the ground isolation diagram.
7-segment display Multicharacter indications are displayed as repeated sequences of characters	
o	(“U” is indicated briefly before “o”.) Control program running
U	Control program startup in progress
L	(Flashing) Firmware cannot be started. Memory unit missing or corrupted
1	Firmware download from PC to control unit in progress
2	At power-up, the display may show short indications of eg. “1”, “2”, “b” or “U”. These are normal indications immediately after power-up. If the display ends up showing any other value than those described, it indicates a hardware failure.

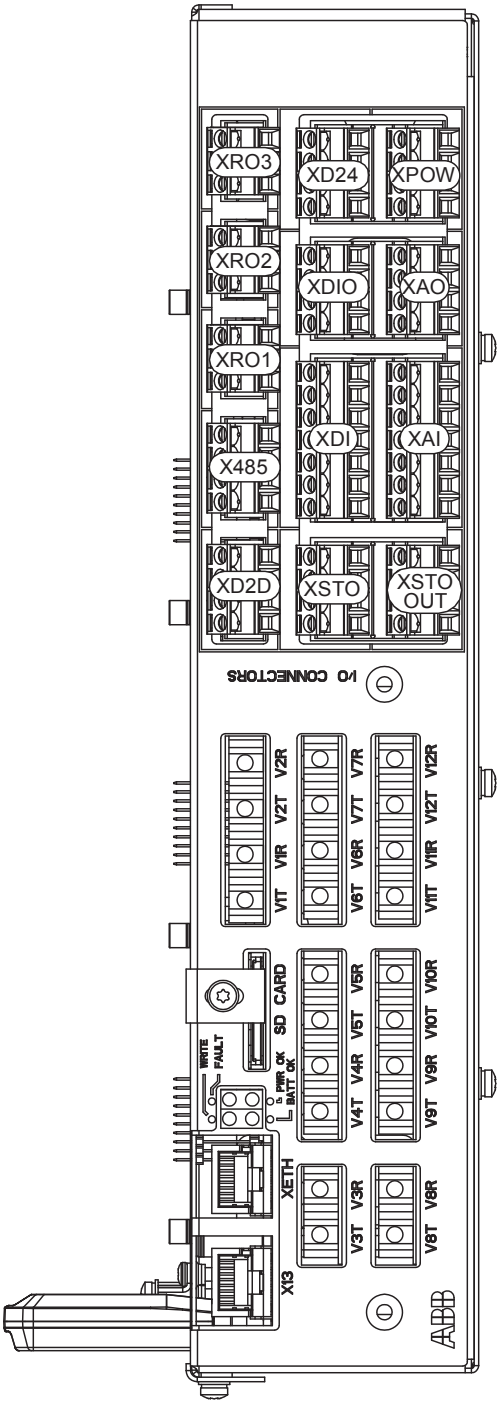

	Description
XAI	Analog inputs
XAO	Analog outputs
XDI	Digital inputs, Digital input interlock (DIIL)
XDIO	Digital input/outputs
XD2D	Drive-to-drive link
XD24	+24 V output (for digital inputs)
XETH	Ethernet port – Not in use
XPOW	External power input
XRO1	Relay output RO1
XRO2	Relay output RO2
XRO3	Relay output RO3
XSTO	Safe torque off connection (input signals)
XSTO OUT	Safe torque off connection (to inverter modules)
X12	(On the opposite side) Not in use
X13	Control panel / PC connection
X485	Connection to CIO-01
V1T/V1R, V2T/V2R	Fiber optic connection to modules 1 and 2 (VxT = transmitter, VxR = receiver)
V3T/V3R … V7T/V7R	Fiber optic connection to modules 3…7 (BCU-12/22 only) (VxT = transmitter, VxR = receiver)
V8T/V8R … V12T/V12R	Fiber optic connection to modules 8…12 (BCU-22 only) (VxT = transmitter, VxR = receiver)
SD CARD	Data logger memory card for inverter module communication
BATT OK	Real-time clock battery voltage is higher than 2.8 V. If the LED is off when the control unit is powered, replace the battery.
FAULT	The control program has generated a fault. See the firmware manual of the supply/inverter unit.
PWR OK	Internal voltage supply is OK
WRITE	Writing to memory card in progress. Do not remove the memory card.

Default I/O diagram of the brake control unit

The diagram below shows the default I/O connections on the brake control unit, and describes the use of the signals/connections. Do not change the factory-made wiring. Refer to the delivery-specific circuit diagrams.

The wire size accepted by all screw terminals (for both stranded and solid wire) is 0.5 … 2.5 mm² (24…12 AWG). The torque is 0.5 N·m (5 lbf·in).

Terminal			Description	
XD2D			Drive-to-drive link	
1	1	B	Not in use by default	
2	2	A		
3	3	BGND		
4	4	Shield		
X485			RS485 connection	
5	5	B	Cooling fan monitoring (CIO module)	
6	6	A		
7	7	BGND		
8	8	Shield		
XRO1, XRO2, XRO3			Relay outputs	
11	11	NC	Norm. closed	XRO1: **Running**[1)] (Energized = running) 250 V AC / 30 V DC, 2 A
12	12	COM	Common	
13	13	NO	Norm. open	
21	21	NC	Norm. closed	XRO2: **Fault (-1)**[1)] (Energized = no fault) 250 V AC / 30 V DC, 2 A
22	22	COM	Common	
23	23	NO	Norm. open	
31	31	NC	Norm. closed	XRO1: **Running**[1)] (Energized = running) 250 V AC / 30 V DC, 2 A
32	32	COM	Common	
33	33	NO	Norm. open	
XSTO, XSTO OUT			XSTO connector	
1	1	OUT	XSTO: Factory connection. Both circuits (power module, control unit) must be closed for the brake unit to start (IN1 and IN2 must be connected to OUT).[2)]	
2	2	SGND		
3	3	IN1		
4	4	IN2		
5	5	IN1	XSTO OUT: Not in use.	
6	6	SGND		
7	7	IN2		
8	8	SGND		
XDI			Digital inputs	

Terminal			Description
1	1	DI1	**Temp fault**[1] (0 = overtemperature)
2	2	DI2	Not in use by default
3	3	DI3	Not in use by default
4	4	DI4	Not in use by default
5	5	DI5	Not in use by default
6	6	DI6	**Reset**[1] (0 -> 1 = fault reset)
7	7	DIIL	Not in use by default
XDIO			Digital input/outputs
1	1	DIO1	Not in use by default
2	2	DIO2	Not in use by default
3	3	DIOGND	Digital input/output ground
4	4	DIOGND	Digital input/output ground
XD24			Auxiliary voltage output
5	1	+24VD	+24 V DC 200 mA[3]
6	2	DICOM	Digital input ground
7	3	+24VD	+24 V DC 200 mA[3]
8	4	DIOGND	Digital input/output ground
ON OFF	DICOM=DIOGND		Ground selection switch[4]
XAI			Analog inputs, reference voltage output
1	1	+VREF	10 V DC, R_L 1…10 kohm
2	2	-VREF	-10 V DC, R_L 1…10 kohm
3	3	AGND	Ground
4	4	AI1+	Not in use by default. 0(4)…20 mA, R_{in} = 100 ohm[5]
5	5	AI1-	
6	6	AI2+	Not in use by default. 0(2)…10 V, R_{in} > 200 kohm[6]
7	7	AI2-	
XAO			Analog outputs
1	1	AO1	**Zero** (no signal indicated)[1] 0…20 mA, R_L < 500 ohm
2	2	AGND	
3	3	AO2	**Zero** (no signal indicated)[1] 0…20 mA, R_L < 500 ohm
4	4	AGND	
XPOW			External power input
1	1	+24VI	24 V DC, 2.05 A
2	2	GND	
3	3	+24VI	
4	4	GND	
X12			Not in use in brake units
X13			Control panel connection
X205			Memory unit connection

[1] Default use of the signal in the control program. The use can be changed by a parameter. See also the delivery-specific circuit diagrams.

2) This input only acts as a true Safe torque off input in inverter control units. In other applications (such as a supply or brake unit), de-energizing the IN1 and/or IN2 terminal will stop the unit but not constitute a true safety function.

3) Total load capacity of these outputs is 4.8 W (200 mA at 24 V) minus the power taken by DIO1 and DIO2.

4) Determines whether DICOM is separated from DIOGND (ie, common reference for digital inputs floats). ON: DICOM connected to DIOGND. OFF: DICOM and DIOGND separate.

5) Current [0(4)…20 mA, R_{in} = 100 ohm] or voltage [0(2)…10 V, R_{in} > 200 kohm] input selected by switch AI2. Change of setting requires reboot of control unit.

6) Current [0(4)…20 mA, R_{in} = 100 ohm] or voltage [0(2)…10 V, R_{in} > 200 kohm] input selected by switch AI1. Change of setting requires reboot of control unit.

Additional information on the connections

Power supply for the control unit (XPOW)

The control unit is powered from a 24 V DC, 2 A supply through terminal block XPOW. With a type BCU/UCU control unit, a second supply can be connected to the same terminal block for redundancy.

Using a second supply is recommended, if:

- the control unit needs to be kept operational during input power breaks, for example, because of continuous fieldbus communication
- immediate restart is needed after a power break (that is, no control unit power-up delay is allowed).

The X485 connector

The X485 provides a connection for CIO-01 I/O module. The following diagram shows the wiring for the CIO module.

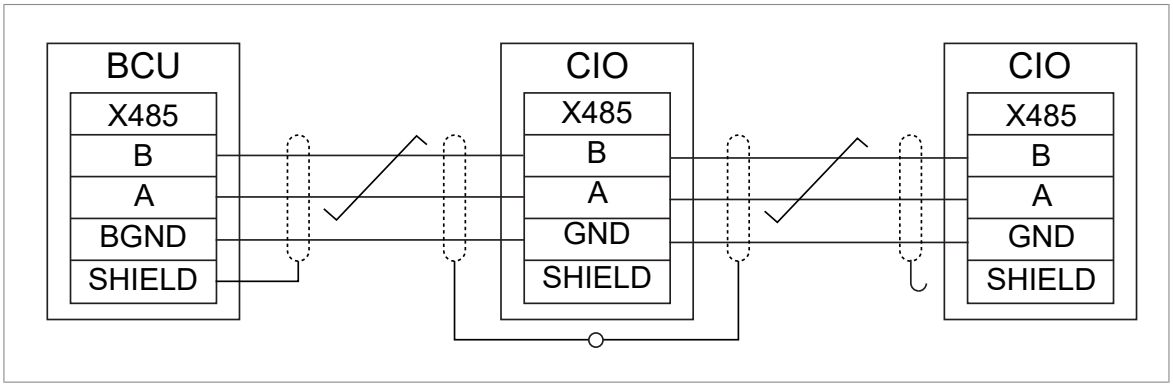

Safe torque off (XSTO, XSTO OUT)

Note: The XSTO input only acts as a true Safe torque off input on the inverter control unit. De-energizing the STO input terminals of other units (supply, DC/DC converter, or brake unit) will stop the unit but not constitute a SIL/PL classified safety function.

FSO safety functions module connection (X12)

Refer to the applicable FSO module user's manual. Note that the FSO safety functions module is not used in supply, DC/DC converter or brake units.

Note: Control units that have a sticker with the text “No FSO support” are not compatible with the FSO safety functions module.

SDHC memory card slot

The BCU-x2 has an on-board data logger that collects real-time data from the power modules to help fault tracing and analysis. The data is stored onto the SDHC memory card inserted into the SD CARD slot and can be analyzed by ABB service personnel.

Connector data

Power supply (XPOW)	Connector pitch 5 mm, wire size 0.5 … 2.5 mm² (22…12 AWG) Maximum tightening torque 0.45 N·m (4 lbf·in) 24 V (±10%) DC, 2 A External power input. Two supplies can be connected to the BCU-x2 for redundancy.
Relay outputs RO1…RO3 (XRO1…XRO3)	Connector pitch 5 mm, wire size 0.5 … 2.5 mm² (22…12 AWG) Maximum tightening torque 0.45 N·m (4 lbf·in) 250 V AC / 30 V DC, 2 A Protected by varistors
+24 V output (XD24:2 and XD24:4)	Connector pitch 5 mm, wire size 0.5 … 2.5 mm² (22…12 AWG) Maximum tightening torque 0.45 N·m (4 lbf·in) Total load capacity of these outputs is 4.8 W (200 mA / 24 V) minus the power taken by DIO1 and DIO2.
Digital inputs DI1…DI6 (XDI:1…XDI:6)	Connector pitch 5 mm, wire size 0.5 … 2.5 mm² (22…12 AWG) Maximum tightening torque 0.45 N·m (4 lbf·in) 24 V logic levels: “0” < 5 V, “1” > 15 V R_{in}: 2.0 kohm Input type: NPN/PNP (DI1…DI5), PNP (DI6) Hardware filtering: 0.04 ms, digital filtering up to 8 ms I_{max}: 15 mA (DI1…DI5), 5 mA (DI6)
Start interlock input DIIL (XDI:7)	Connector pitch 5 mm, wire size 0.5 … 2.5 mm² (22…12 AWG) Maximum tightening torque 0.45 N·m (4 lbf·in) 24 V logic levels: "0" < 5 V, "1" > 15 V R_{in}: 2.0 kohm Input type: NPN/PNP Hardware filtering: 0.04 ms, digital filtering up to 8 ms
Digital inputs/outputs DIO1 and DIO2 (XDIO:1 and XDIO:2) Input/output mode selection by parameters. DIO1 can be configured as a frequency input (0…16 kHz with hardware filtering of 4 microseconds) for 24 V level square wave signal (sinusoidal or other wave form cannot be used). DIO2 can be configured as a 24 V level square wave frequency output. See the firmware manual, parameter group 11.	Connector pitch 5 mm, wire size 0.5 … 2.5 mm² (22…12 AWG) Maximum tightening torque 0.45 N·m (4 lbf·in) As inputs: 24 V logic levels: "0" < 5 V, "1" > 15 V. R_{in}: 2.0 kohm. Filtering: 1 ms. As outputs: Total output current from +24VD is limited to 200 mA 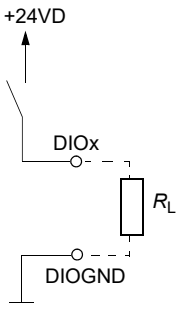
Reference voltage for analog inputs +VREF and -VREF (XAI:1 and XAI:2)	Connector pitch 5 mm, wire size 0.5 … 2.5 mm² (22…12 AWG) Maximum tightening torque 0.45 N·m (4 lbf·in) 10 V ±1% and -10 V ±1%, R_{load} 1…10 kohm Maximum output current: 10 mA

Analog inputs AI1 and AI2 (XAI:4 … XAI:7). Current/voltage input mode selection by switches	Connector pitch 5 mm, wire size 0.5 … 2.5 mm^2 (22…12 AWG) Maximum tightening torque 0.45 N·m (4 lbf·in) Current input: -20…20 mA, R_{in} = 100 ohm Voltage input: -10…10 V, R_{in} > 200 kohm Differential inputs, common mode range ±30 V Sampling interval per channel: 0.25 ms Hardware filtering: 0.25 ms Resolution: 11 bit + sign bit Inaccuracy: 1% of full scale range
Analog outputs AO1 and AO2 (XAO)	Connector pitch 5 mm, wire size 0.5 … 2.5 mm^2 (22…12 AWG) Maximum tightening torque 0.45 N·m (4 lbf·in) 0…20 mA, R_{load} < 500 ohm Frequency range: 0…500 Hz Resolution: 11 bit + sign bit Inaccuracy: 2% of full scale range
XD2D connector	Connector pitch 5 mm, wire size 0.5 … 2.5 mm^2 (22…12 AWG) Maximum tightening torque 0.45 N·m (4 lbf·in) Physical layer: RS-485 Transmission rate: 8 Mbit/s Cable type: Shielded twisted-pair cable with a twisted pair for data and a wire or another pair for signal ground (nominal impedance 100 … 165 ohm, for example Belden 9842) Maximum length of link: 50 m (164 ft) Termination by switch
RS-485 connection (X485)	Connector pitch 5 mm, wire size 0.5 … 2.5 mm^2 (22…12 AWG) Maximum tightening torque 0.45 N·m (4 lbf·in) Physical layer: RS-485 Cable type: Shielded twisted-pair cable with a twisted pair for data and a wire or another pair for signal ground (nominal impedance 100 … 165 ohm, for example Belden 9842) Maximum length of link: 50 m (164 ft)
Safe torque off connection (XSTO)	Connector pitch 5 mm, wire size 0.5 … 2.5 mm^2 (22…12 AWG) Maximum tightening torque 0.45 N·m (4 lbf·in) Input voltage range: -3…30 V DC Logic levels: "0" < 5 V, "1" > 17 V. **Note:** For the unit to start, both connections must be “1”. This applies to all control units (including drive, inverter, supply, brake, DC/DC converter etc. control units), but SIL/PL classified Safe torque off functionality is only achieved through the XSTO connector of the drive/inverter control unit. Current consumption: 66 mA (continuous) per STO channel per inverter module EMC (immunity) according to IEC 61326-3-1 and IEC 61800-5-2
Safe torque off output (XSTO OUT)	Connector pitch 5 mm, wire size 0.5 … 2.5 mm^2 (22…12 AWG) Maximum tightening torque 0.45 N·m (4 lbf·in) To STO connector of inverter module.
Control panel connection (X13)	Connector: RJ-45 Cable length < 100 m (328 ft)
Ethernet connection (XETH)	Connector: RJ-45 This connection is not supported by the firmware

SDHC memory card slot (SD CARD)	Memory card type: SDHC Maximum memory size: 4 GB
Battery	Real-time clock battery type: BR2032
The terminals of the control unit fulfill the Protective Extra Low Voltage (PELV) requirements. The PELV requirements of a relay output are not fulfilled if a voltage higher than 48 V is connected to the relay output.	

BCU-x2 ground isolation diagram

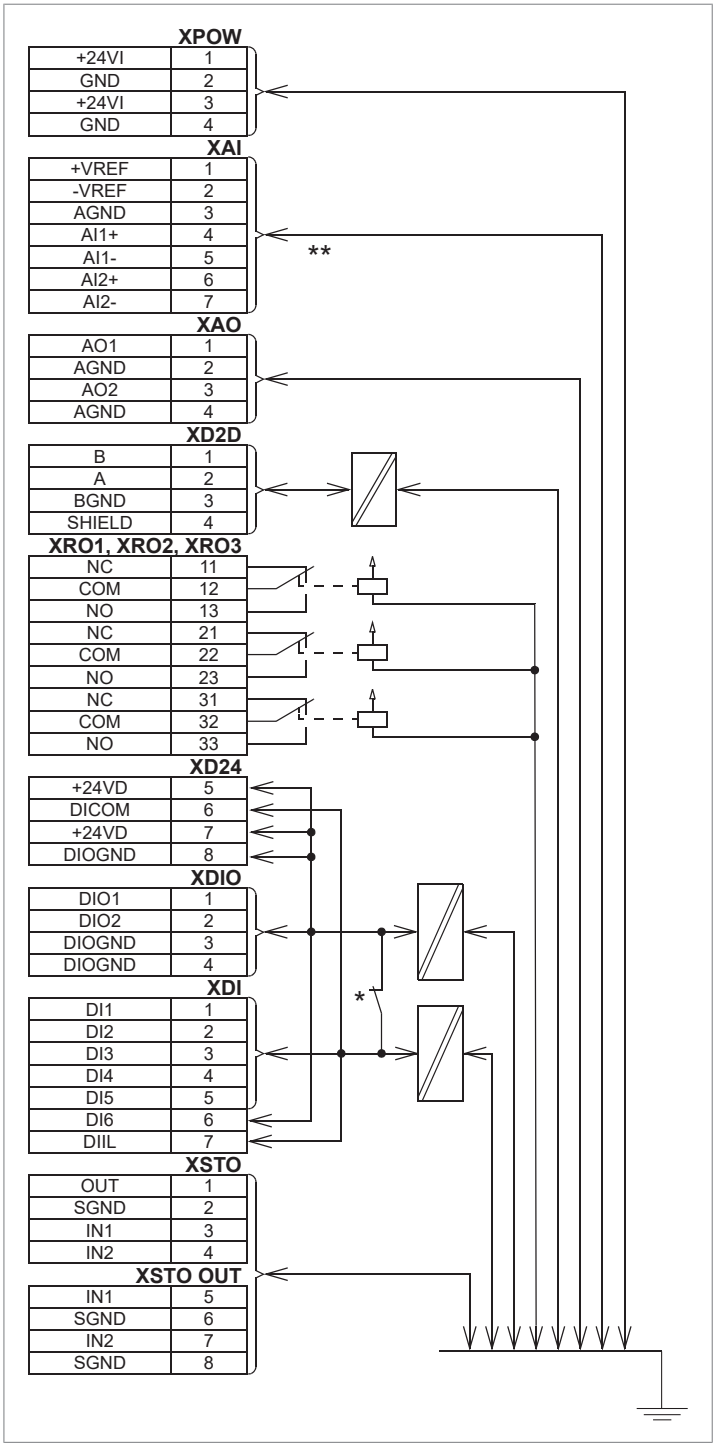

*Ground selector (DICOM=DIOGND) settings

DICOM=DIOGND: ON All digital inputs share a common ground (DICOM connected to DIOGND). This is the default setting.
DICOM=DIOGND: OFF Ground of digital inputs DI1…DI5 and DIIL (DICOM) is isolated from DIO signal ground (DIOGND). Isolation voltage 50 V.

**The maximum common mode voltage between each AI input and AGND is +30 V

6

Installation checklist

Contents of this chapter

This chapter contains a checklist for the mechanical and electrical installation of the drive.

Checklist

Examine the mechanical and electrical installation of the drive before start-up. Go through the checklist together with another person.

WARNING!
Obey the safety instructions of the drive. If you ignore them, injury or death, or damage to the equipment can occur. If you are not a qualified electrical professional, do not do installation, commissioning or maintenance work.

WARNING!
Stop the drive and do the steps in section Electrical safety precautions (page 35) before you start the work.

Make sure that ...	☑
The ambient operating conditions meet the drive ambient conditions specification and enclosure rating (IP code).	☐
The supply voltage matches the nominal input voltage of the drive. See the type designation label.	☐
The insulation resistance of the input power cable, motor cable and motor is measured according to local regulations and the manuals of the drive.	☐
The drive cabinet is attached to the floor, and if necessary due to vibration etc, also by its top to the wall or roof.	☐

Make sure that ...	☑
If the drive is connected to a network other than a symmetrically grounded TN-S system: You have done all the required modifications (for example, you may need to disconnect the EMC filter or ground-to-phase varistor). See the electrical installation instructions in the supply unit manual.	☐
There is an adequately sized protective earth (ground) conductor(s) between the drive and the switchboard, the conductor is connected to correct terminal, and the terminal is tightened to the correct torque. Grounding has also been measured according to the regulations.	☐
If the drive is equipped with a DC/DC converter unit: There is an adequately sized protective earth (ground) conductor between the energy storage and the DC/DC converter, the conductor has been connected to appropriate terminal, and the terminal has been tightened to the proper torque. Proper grounding has also been measured according to the regulations.	☐
If the drive is equipped with a DC/DC converter unit: The energy storage cable has been connected to the correct terminals of the DC/DC converter and energy storage, and the terminals have been tightened to the proper torque.	☐
If the drive is equipped with a DC/DC converter unit: The energy storage has been equipped with fuses for protecting energy storage cable in a cable short-circuit situation.	☐
If the drive is equipped with a DC/DC converter unit: The energy storage has been equipped with a disconnecting device.	☐
The input power cable is connected to the correct terminals, the phase order is correct, and the terminals are tightened to the correct torque.	☐
There is an adequately sized protective earth (ground) conductor between the motor and the drive. The conductor is connected to the correct terminal, and the terminal is tightened to the correct torque. Grounding has also been measured according to the regulations.	☐
The motor cable is connected to the correct terminals, the phase order is correct, and the terminals are tightened to the correct torque.	☐
The motor cable is routed away from other cables.	☐
No power factor compensation capacitors are connected to the motor cable.	☐
If an external brake resistor is connected to the drive: There is an adequately sized protective earth (ground) conductor between the brake resistor and the drive, and the conductor is connected to the correct terminal, and the terminals are tightened to the correct torque. Grounding has also been measured according to the regulations.	☐
If an external brake resistor is connected to the drive: The brake resistor cable is connected to the correct terminals, and the terminals are tightened to the correct torque.	☐
If an external brake resistor is connected to the drive: The brake resistor cable is routed away from other cables.	☐
The control cables are connected to the correct terminals, and the terminals are tightened to the correct torque.	☐
The voltage setting of the auxiliary voltage transformers (if any) is correct. See the electrical installation instructions.	☐
If a drive bypass connection will be used: The direct-on-line contactor of the motor and the drive output contactor are either mechanically and/or electrically interlocked, that is, they cannot be closed at the same time. A thermal overload device must be used for protection when bypassing the drive. Refer to local codes and regulations.	☐
There are no tools, foreign objects or dust from drilling inside the drive.	☐
The terminal box cover of the motor is in place. Cabinet shrouds are in place and doors are closed.	☐
The motor and the driven equipment are ready for power-up.	☐
The coolant connections between cubicles (if any) and to the cooling circuit are tight.	☐
If the drive is equipped with a cooling unit: Make sure that the mechanical and electrical installation of the cooling unit is completed. Refer to the cooling unit documentation.	☐

7

Start-up

Contents of this chapter

This chapter contains the start-up procedure of the brake unit.

The symbols in brackets, for example [Q1], refer to the item designations used in the circuit diagrams. If a task is valid only for a certain option device or feature, the option code is given in brackets, for example, (option +F286).

ABB recommends that you connect a commissioning PC tool (DriveComposer) to the brake unit for the start up. By using the tool, you can set up parameters and monitor the drive during the test.

These instructions do not cover all start-up tasks of all possible variants of the brake unit. Always refer to the unit-specific circuit diagrams when proceeding with the start-up.

Start-up procedure

Tasks	☑
Safety	
WARNING! Obey the safety instructions during the start-up procedure. See ACS880 liquid-cooled multidrive cabinets and modules safety instructions (3AXD50000048633 [English]). If you ignore the safety instructions, injury or death, or damage to the equipment can occur. If you are not a qualified electrical professional, do not do installation or maintenance work.	
WARNING! Make sure that the disconnector of the supply transformer is locked to open position, ie, no voltage is, or can be, connected to drive inadvertently. Check also by measuring that there is no voltage connected.	
Note: Some brake resistors are coated with oil film for protection. The protective oil will burn off when the brake resistor is used for the first time. Make sure that there is proper ventilation.	
Starting and checking the cooling system	
Fill up and bleed the internal cooling circuit. Start the cooling unit up. See Filling up and bleeding the internal cooling circuit (page 94). If the drive is equipped with a cooling unit (ACS880-1007LC): Start up and power up the cooling unit. See ACS880-1007LC liquid cooling unit user's manual (3AXD50000129607 [English]) and the delivery-specific circuit diagrams.	☐
Check the cooling system for leaks. Make sure that cooling circuit joints at the shipping split joining cubicles are tight and that all drain valves have been closed.	☐
Make sure that the coolant can flow freely in all cubicles. Make sure that drive system cools down. See ACS880-1007LC liquid cooling unit user's manual (3AXD50000129607 [English]).	☐
Install all shrouds (if removed) and close the cabinet doors.	☐
Powering up the DC bus and starting up the inverters	
Make sure that all cabinet doors are closed.	☐
Close the disconnector of the supply transformer.	☐
Close the drive auxiliary voltage switch [Q21] to power up the control units.	☐
Start the supply unit. See the procedure in the supply unit hardware manual. When started, the supply unit charges the capacitors of all inverters and brake units connected to the DC bus.	☐
Start up the inverter units. See the procedure in the inverter unit hardware manual.	☐
Brake units with DC switch/disconnector (option +F286): Connecting the brake unit to the DC bus	
Switch on the auxiliary voltage to the brake unit.	☐
To charge the brake unit capacitors, close the charging switch [Q10].	☐
When the green light on the cabinet door illuminates, close the DC switch/disconnector [Q11] of the brake unit.	☐
Open the charging switch [Q10]. **Note:** The brake unit can start only after the charging switch is open.	☐
Setting up the brake parameters	

Tasks	☑
Check the brake control program parameter settings. See ACS880 brake control program firmware manual (3AXD50000020967 [English]).	☐
Operational tests	
Test the operation of the braking. See ACS880 brake control program firmware manual (3AXD50000020967 [English]).	☐

8

Operating instructions

Contents of this chapter

This chapter instructs in the basic operations of the brake unit with the DC switch/disconnector (option +F286).

Disconnecting the brake unit from the drive DC bus

1. Stop all motors and inverter units that can regenerate energy back to the DC link. Keep them stopped when the brake unit is disconnected.
2. Open the DC switch/disconnector [Q11] of the brake unit.

Connecting the brake unit to the drive DC bus

If you connect voltage to the brake unit for the first time, obey the brake unit start-up instructions.

If you connect voltage to the brake unit after the first start-up, obey these instructions:

1. Make sure that the auxiliary power supply of the brake unit is connected and the drive DC link is powered up.
2. Close the charging switch [Q10]. The brake unit capacitor charging starts.
3. When the green light on the cabinet door illuminates, close the DC switch/disconnector [Q11] of the brake unit.
4. Open the charging switch [Q10].

Note: The brake unit can start only after the charging switch is open.

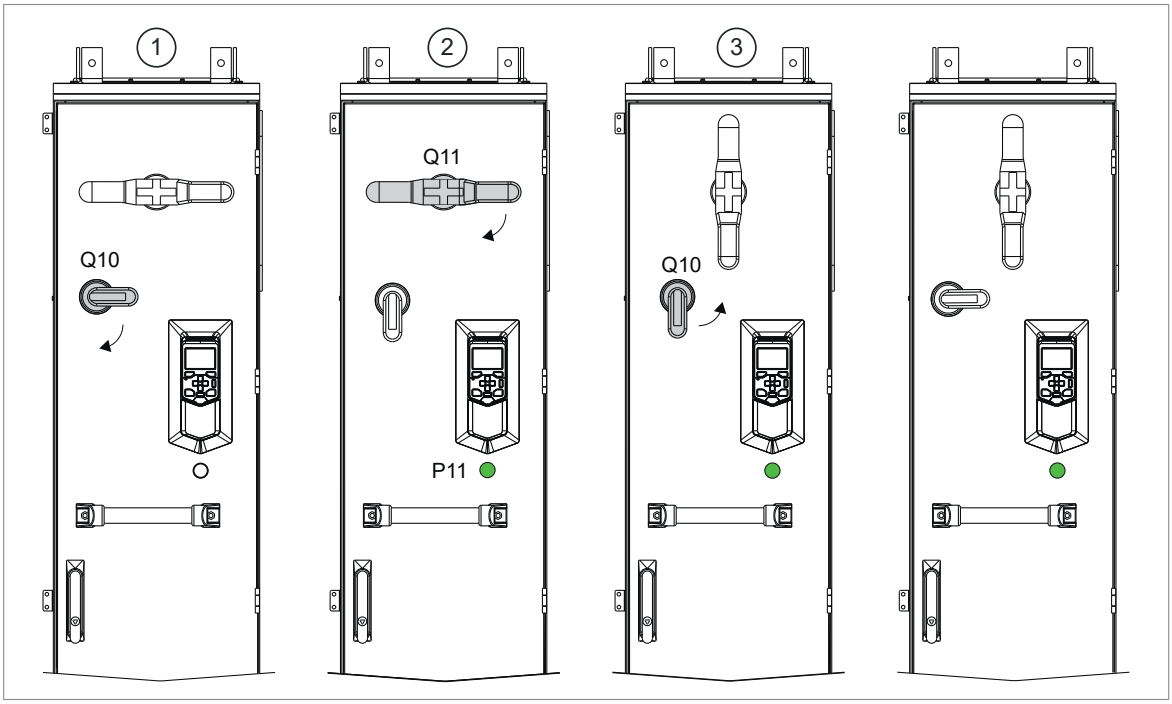

9

Fault tracing

Contents of this chapter

This chapter describes the fault tracing of the brake unit.

LEDs

Control panel and panel platform/holder LEDs

The ACS-AP-… control panel has a status LED. The control panel mounting platform or holder has two status LEDs. For their indications, see the following table.

Location	LED	Indication
Control panel	Continuous green	The unit is functioning normally.
	Flickering green	Data is transferred between the PC and the unit through the USB connection of the control panel.
	Blinking green	There is an active warning in the unit.
	Continuous red	There is an active fault in the unit.
	Blinking red	There is a fault that requires the stopping and restarting of the drive/converter/inverter.
	Blinking blue (ACS-AP-W only)	The Bluetooth interface is enabled, in discoverable mode, and ready for pairing.
	Flickering blue (ACS-AP-W only)	Data is being transferred through the Bluetooth interface of the control panel.
Control panel mounting platform or holder (with the control panel removed)	Red	There is an active fault in the unit.
	Green	Power supply for the control unit is OK.

Control unit LEDs

LED	Color	Indication
BATT OK	Green	Battery voltage of the real-time clock is OK (higher than 2.8 V). When the LED is not lit, • battery voltage is below 2.8 V, • the battery is missing, or • the control unit is not powered.
PWR OK	Green	Internal voltage is sufficient.
FAULT	Red	The control program indicates that the equipment is faulty. See the appropriate firmware manual.
WRITE	Yellow	Writing to SD card in progress.

R8i module LEDs

LED	Color	Indication
FAULT	Continuous red	There is an active fault in the module.
ENABLE / STO	Continuous green	The module is ready for use.
ENABLE / STO	Continuous yellow	XSTO connectors are de-energized.
POWER OK	Continuous green	Supply voltage of the internal circuit boards is OK (> 21 V).

7-segment display of the brake control unit

See the control unit description.

Warning and fault messages

See ACS880 brake unit control program firmware manual [3AXD50000020967 (English)].

10

Maintenance

Contents of this chapter

This chapter instructs how to maintain the brake unit.

Maintenance intervals

The tables below show the maintenance tasks which can be done by the end user. For ABB Service offering, refer to www.abb.com/drivesservices or consult your local ABB Service representative (www.abb.com/searchchannels).

Description of symbols

Action	Description
I	Inspection (visual inspection and maintenance action if needed)
P	Performance of on/off-site work (commissioning, tests, measurements or other work)
R	Replacement

Recommended maintenance intervals after start-up

Maintenance task/object	Years from start-up													
	0	1	2	3	4	5	6	7	8	9	10	11	12	...
Coolant														
Checking coolant antifreeze concentration		P	P	P	P	P	P	P	P	P	P	P	P	P
Checking coolant quality			P		P		P		P		P		P	
Coolant draining and replacement							R						R	

Maintenance task/object	Years from start-up													
	0	1	2	3	4	5	6	7	8	9	10	11	12	...
External circuit of the main heat exchanger (temperature, flow, pressure)		I		I		I		I		I		I		I
ABB cooling unit (if present)	See *ACS880-1007LC liquid cooling unit user's manual* (3AXD50000129607 [English])													
Cooling fans and fan control board														
Cooling fans 230 VAC 50/60Hz										R				
CIO-module for fan control (230 VAC)[1]										R				
Cooling fans 115 VAC 50/60Hz							R						R	
CIO-module for fan control (115 VAC)[1]							I/R						R	
Batteries														
Control panel battery										R				
Control unit battery							R						R	
Control unit														
BCU control unit													R	
Connections and environment														
Quality of supply voltage		P	P	P	P	P	P	P	P	P	P	P	P	P
Spare parts														
Spare parts		I	I	I	I	I	I	I	I	I	I	I	I	I
DC circuit capacitor reforming (spare modules and spare capacitors)		P	P	P	P	P	P	P	P	P	P	P	P	P
Inspections														
Checking tightness of cable and busbar terminals. Tightening if needed.		I	I	I	I	I	I	I	I	I	I	I	I	I
Checking ambient conditions (dustiness, corrosion, temperature)		I	I	I	I	I	I	I	I	I	I	I	I	I
Checking coolant pipe connections		I	I	I	I	I	I	I	I	I	I	I	I	I
Functional safety														
Safety function test	I See the maintenance information of the safety function.													
Safety component expiry (Mission time, T_M)	20 years													
														3AXD10000578918 K

[1] To replace the CIO-module or reset the fan counters, see *CIO-01 I/O module for distributed I/O bus control user's manual* (3AXD50000126880 [English]).

Note:

- Maintenance and component replacement intervals are based on the assumption that the equipment is operated within the specified ratings and ambient conditions. ABB recommends annual drive inspections to ensure the highest reliability and optimum performance.
- Long term operation near the specified maximum ratings or ambient conditions may require shorter maintenance intervals for certain components. Consult your local ABB Service representative for additional maintenance recommendations.

Maintenance timers and counters

The control program has maintenance timers and counters that can be configured to generate a warning when a pre-defined limit is reached. Each timer/counter can be set to monitor any parameter. This feature is especially useful as a service reminder. For more information, see the firmware manual.

Cabinet

Cleaning the interior of the cabinet

WARNING!
Obey the safety instructions of the drive. If you ignore them, injury or death, or damage to the equipment can occur. If you are not a qualified electrical professional, do not do installation, commissioning or maintenance work.

WARNING!
Use a vacuum cleaner with antistatic hose and nozzle, and wear a grounding wristband. Using a normal vacuum cleaner creates static discharges which can damage circuit boards.

1. Stop the drive and do the steps in section Electrical safety precautions (page 35) before you start the work.
2. Open the cabinet door.
3. Clean the interior of the cabinet. Use a vacuum cleaner and a soft brush.
4. Clean the air inlets of the fans and air outlets of the modules (top).
5. Clean the air inlet gratings (if any) on the door.
6. Close the door.

Cleaning the exterior of the drive

WARNING!
Obey the safety instructions of the drive. If you ignore them, injury or death, or damage to the equipment can occur. If you are not a qualified electrical professional, do not do installation, commissioning or maintenance work.

1. Stop the drive and do the steps in section Electrical safety precautions (page 35) before you start the work.
2. Clean the exterior of the drive. Use:
   - vacuum cleaner with an antistatic hose and nozzle
   - soft brush
   - dry or damp (not wet) cleaning cloth. Moisten with clean water, or mild detergent (pH 5…9 for metal, pH 5…7 for plastic).

WARNING!
Prevent water from entering the drive. Never use excessive amount of water, a hose, steam, etc.

Fan replacement

Brake chopper module cubicle

WARNING!
Obey the safety instructions of the drive. If you ignore them, injury or death, or damage to the equipment can occur. If you are not a qualified electrical professional, do not do installation, commissioning or maintenance work.

WARNING!
Use the required personal protective equipment. Wear protective gloves and long sleeves. Some parts have sharp edges.

1. Stop the drive and do the steps in section Electrical safety precautions (page 35) before you start the work.
2. Remove any shrouding in front of the cooling fan in case of marine construction (+C121).
3. Disconnect the fan wiring. Remove the CIO module.
4. Undo the two retaining screws (a).
5. Pull the fan outwards to separate it from the heat exchanger housing.
6. Install new fan in reverse order. Align the guide pins (b) at the rear of the fan cowling with the slots (c) in the module bottom guide, then reinstall the retaining screws (a).

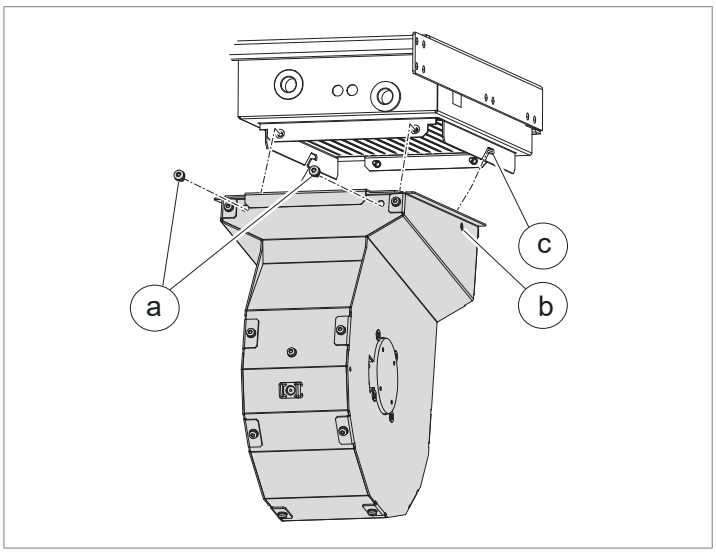

Fan in the output cubicle, top cable entry (option +H351)

WARNING!
Obey the safety instructions of the drive. If you ignore them, injury or death, or damage to the equipment can occur. If you are not a qualified electrical professional, do not do installation, commissioning or maintenance work.

WARNING!
Use the required personal protective equipment. Wear protective gloves and long sleeves. Some parts have sharp edges.

Note: During the fan replacement, do not remove the PE busbar on the left side of the cabinet opening.

1. Repeat the steps described in section Electrical safety precautions (page 35).
2. Remove any shrouding in front of the cooling fan.
3. Disconnect the fan wiring.
4. Undo the four fastening screws.
5. Pull the fan housing out.
6. Install the new fan in reverse order.

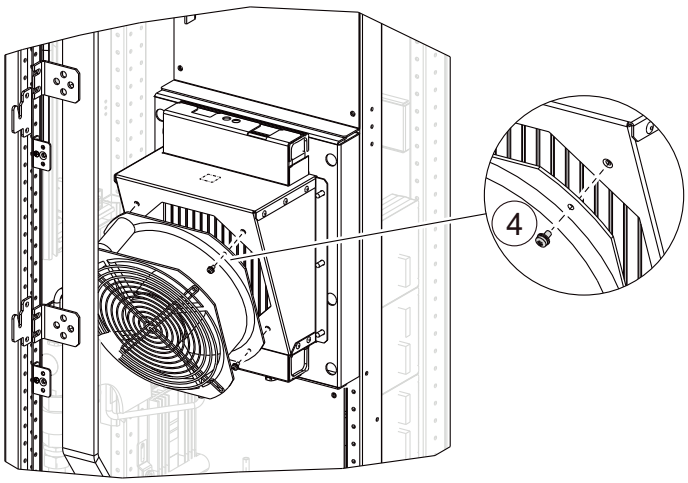

Brake module

WARNING!
Obey the safety instructions given in ACS880 liquid-cooled multidrive cabinets and modules safety instructions (3AXD50000048633 [English]). If you ignore the safety instructions, injury or death, or damage to the equipment can occur.

If you are not a qualified electrical professional, do not do installation or maintenance work.

WARNING!
Make sure that the replacement module has exactly the same type code as the old module.

WARNING!
Beware of hot coolant. Do not work on the liquid cooling system until the pressure is lowered down by stopping the pumps and draining the coolant. High-pressure warm coolant (6 bar, max. 50 °C) is present in the internal cooling circuit when it is in operation.

WARNING!
Use the required personal protective equipment. Wear protective gloves and long sleeves. Some parts have sharp edges.

Assembling the service platform

The service platform is included in the cabinet delivery. It can be used when installing or servicing liquid-cooled R8i modules.

1. Fasten the triangular supports to the cabinet frame (5 × M6 screws for each support). Make sure that the guide pins are properly inserted in the holes of the frame. Tighten the screws to torque (max 5.5 N·m / 4 lb·ft).
2. Select the braces (4 pcs) according to the width of the cubicle and attach them to the supports.
3. Attach the support feet to the platform and adjust them to the correct height.
4. Attach the slide plate. Put the hooks (a) at the back of the slide plate through the holes in the cabinet frame. Align the slots (b) in the slide plate with the braces.
5. Fix the slide plate into place with the index screws (c) at the bottom of the slide plate.

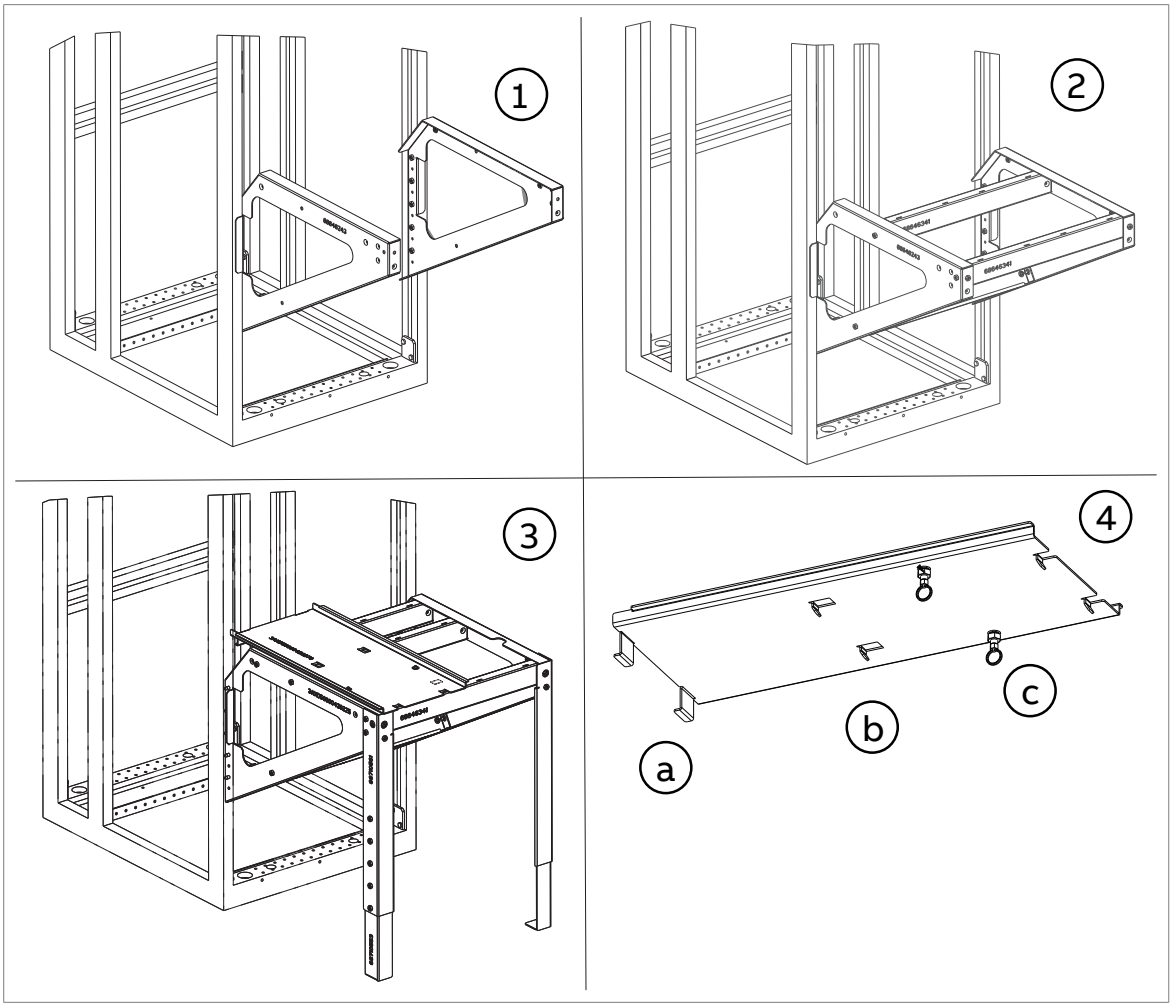

Removing the module

1. Do the steps in section Electrical safety precautions (page 35).
2. Assemble the service platform delivered with the drive. Refer to section Assembling the service platform (page 79).
3. Remove the shrouding in front of the module.
4. Remove the locking screws of the swing-out frame (if present) and open it.
5. Disconnect the wiring from the module and move it aside. Use cable ties to keep the wiring out of the way.

6. Remove the L-shaped DC busbars at the top of the module. Make note of the orientation of the screws as well as the order of the washers.

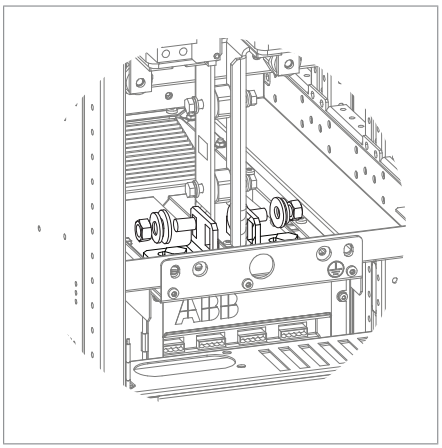

7. Close the inlet valve (a) and outlet valve (located on the right-hand side of the cubicle). Lead the drain hoses (b, on both sides of the cubicle) into a suitable container. Open the drain valves (c, on both sides of the cubicle). This will drain all modules in the cubicle.

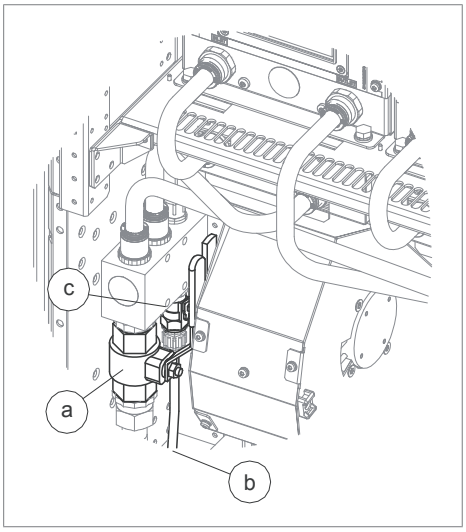

8. After the module has drained, disconnect the piping from the module.

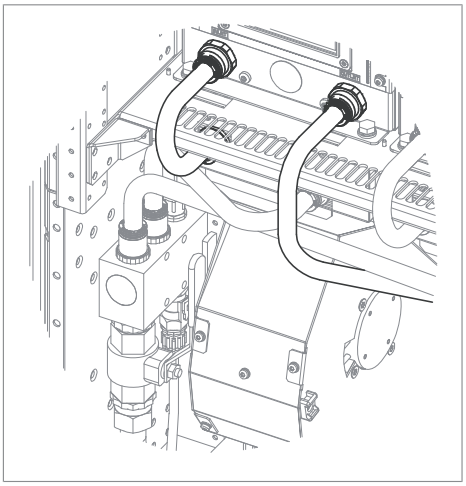

9. Remove the module retaining screws at the top and the bottom of the module.

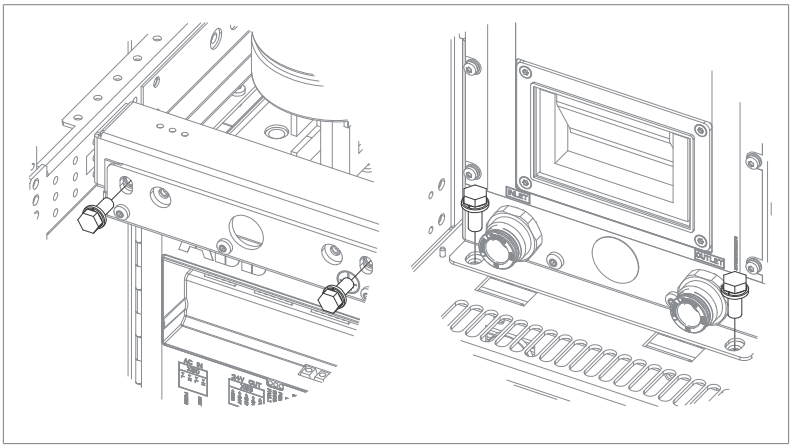

10. Pull the module carefully out onto the service platform. Keep the module secured to a hoist or equivalent to prevent the module from falling. For information on using the lifting device, see Converter module lifting device for drive cabinets hardware manual (3AXD50000210268 [English]).

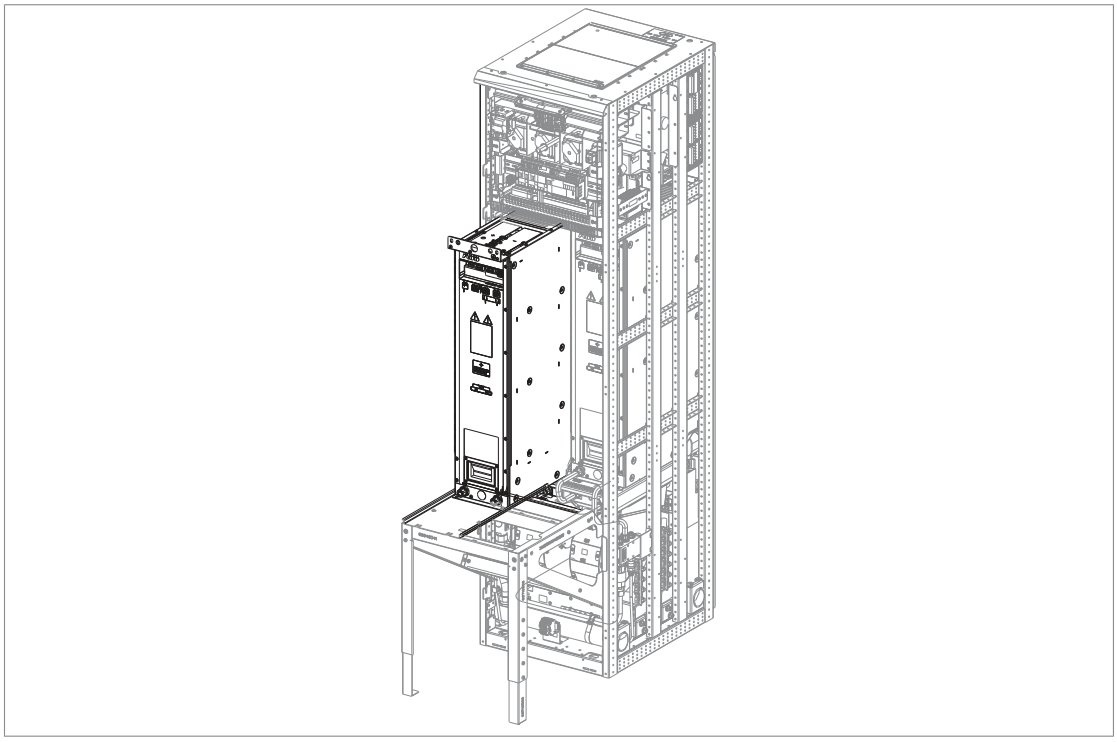

Reinstalling the module

1. Push the module carefully into its bay.
2. Fasten the retaining screws at the top and the bottom of the module.
3. Reinstall the DC busbars at the top of the module.
4. Reconnect the coolant pipes to the module. Tighten to specified torque. R8i module coolant connections: 15 N·m (11.1 lbf·ft). Other connections: 20 N·m (14.75 lbf·ft).
5. Reconnect the control wiring to the module.
6. Fill up the cooling system. For instructions, see section Filling up and bleeding the internal cooling circuit.
7. Close the swing-out frame (if present). Reinstall all shrouds removed earlier.

Capacitors

The intermediate DC circuit of the drive contains several electrolytic capacitors. Operating time, load, and surrounding air temperature have an effect on the life of the capacitors. Capacitor life can be extended by decreasing the surrounding air temperature.

Capacitor failure is usually followed by damage to the unit and an input cable fuse failure, or a fault trip. If you think that any capacitors in the drive have failed, contact ABB.

Reforming the capacitors

The capacitors must be reformed if the drive has not been powered (either in storage or unused) for a year or more. The manufacturing date is on the type designation label. For information on reforming the capacitors, refer to Capacitor reforming instructions (3BFE64059629 [English]).

Fuses

Replacing the brake chopper fuses

WARNING!
Obey the safety instructions of the drive. If you ignore them, injury or death, or damage to the equipment can occur.

WARNING!
Use the required personal protective equipment. Wear protective gloves and long sleeves. Some parts have sharp edges.

1. Stop the drive and do the steps in section Electrical safety precautions (page 35) before you start the work.
2. Open the door of the module cubicle.
3. Remove the shrouding in front of the fuses (upper part of the cabinet).
4. Check the condition of the fuses. In case of a blown fuse, replace all fuses with similar fuses.
5. Slacken the nuts of the headless screws of the fuses, and slide out the fuse blocks.
6. Make note of the order of the washers on the screws.
7. Remove the screws, nuts and washers from the old fuses and attach them to the new fuses. Make sure to keep the washers in the original order.
8. Insert the new fuses into their slots in the cubicle. Pre-tighten the nuts first by hand or by applying a torque of no more than 5 N·m (3.7 lbf·ft).
9. Tighten the nuts to torque as follows:
   - Cooper-Bussmann fuses: 50 N·m (37 lbf·ft)
   - Mersen (Ferraz-Shawmut): 46 N·m (34 lbf·ft)
   - Other: Refer to the fuse manufacturer’s instructions
10. Attach the shrouding (if any) and close the door.

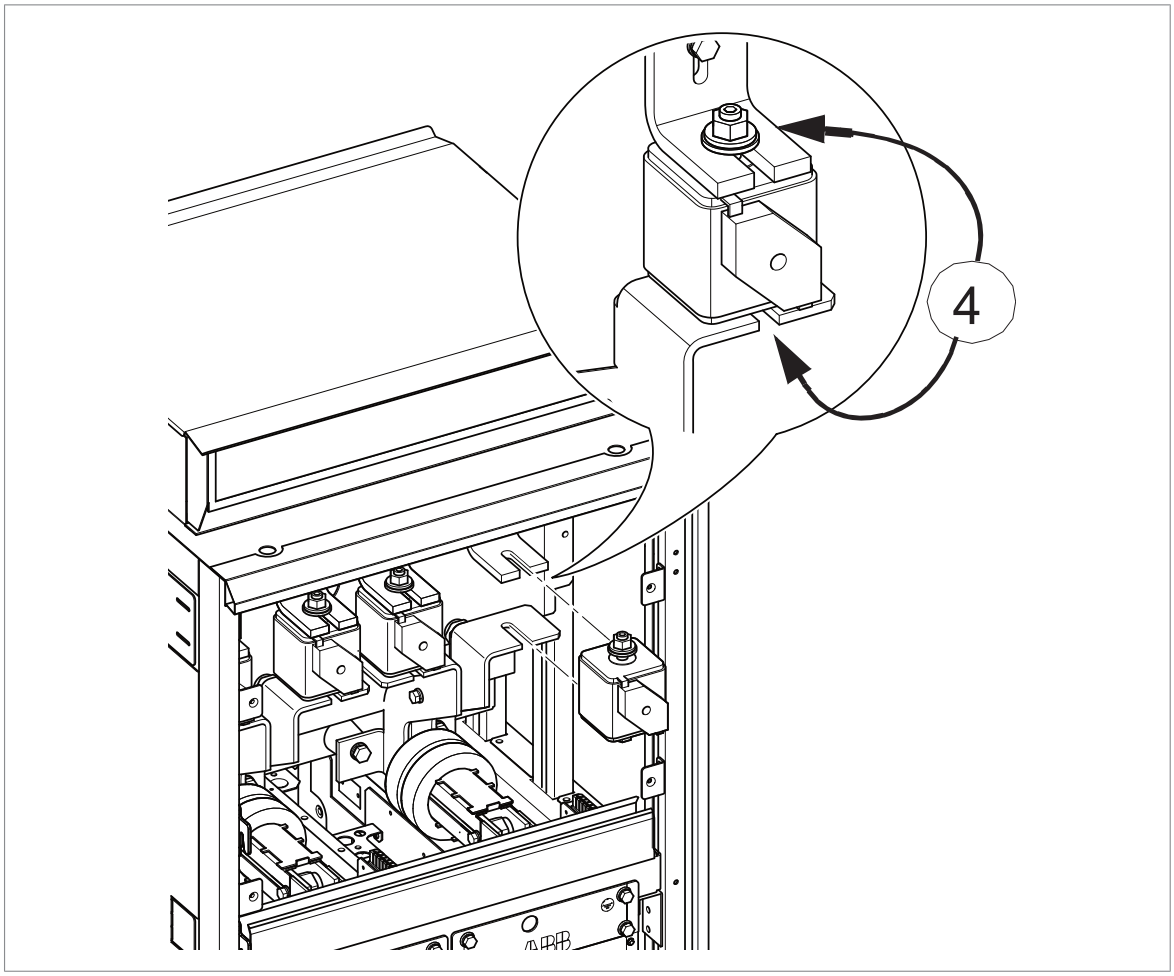
4

Replacing the resistor fuses

WARNING!
Obey the safety instructions given in ACS880 liquid-cooled multidrive cabinets and modules safety instructions (3AXD50000048633 [English]). If you ignore the safety instructions, injury or death, or damage to the equipment can occur.

If you are not a qualified electrical professional, do not do installation or maintenance work.

WARNING!
Use the required personal protective equipment. Wear protective gloves and long sleeves. Some parts have sharp edges.

1. Repeat the steps described in section Electrical safety precautions (page 35) before you start the work.
2. Open the cubicle door.
3. Undo the locking screws and open the swing-out frame or remove the shrouding.
4. Check the condition of the fuses. In case of a blown fuse, replace all fuses with similar fuses.
5. Slacken the nuts of the headless screws of the fuses, and slide out the fuse blocks.
6. Make note of the order of the washers on the screws.
7. Remove the screws, nuts and washers from the old fuses and attach them to the new fuses. Make sure to keep the washers in the original order.
8. Insert the new fuses into their slots in the cubicle. Pre-tighten the nuts of the new fuses first by hand or by applying a torque of no more than 5 N·m (3.7 lbf·ft).
9. Tighten the nuts to torque as follows:
   - Cooper-Bussmann fuses: 50 N·m (37 lbf·ft)
   - Mersen (Ferraz-Shawmut): 46 N·m (34 lbf·ft)
   - Other: Refer to the fuse manufacturer’s instructions
10. Close the swing-out frame, attach the shrouding (if any) and close the door.

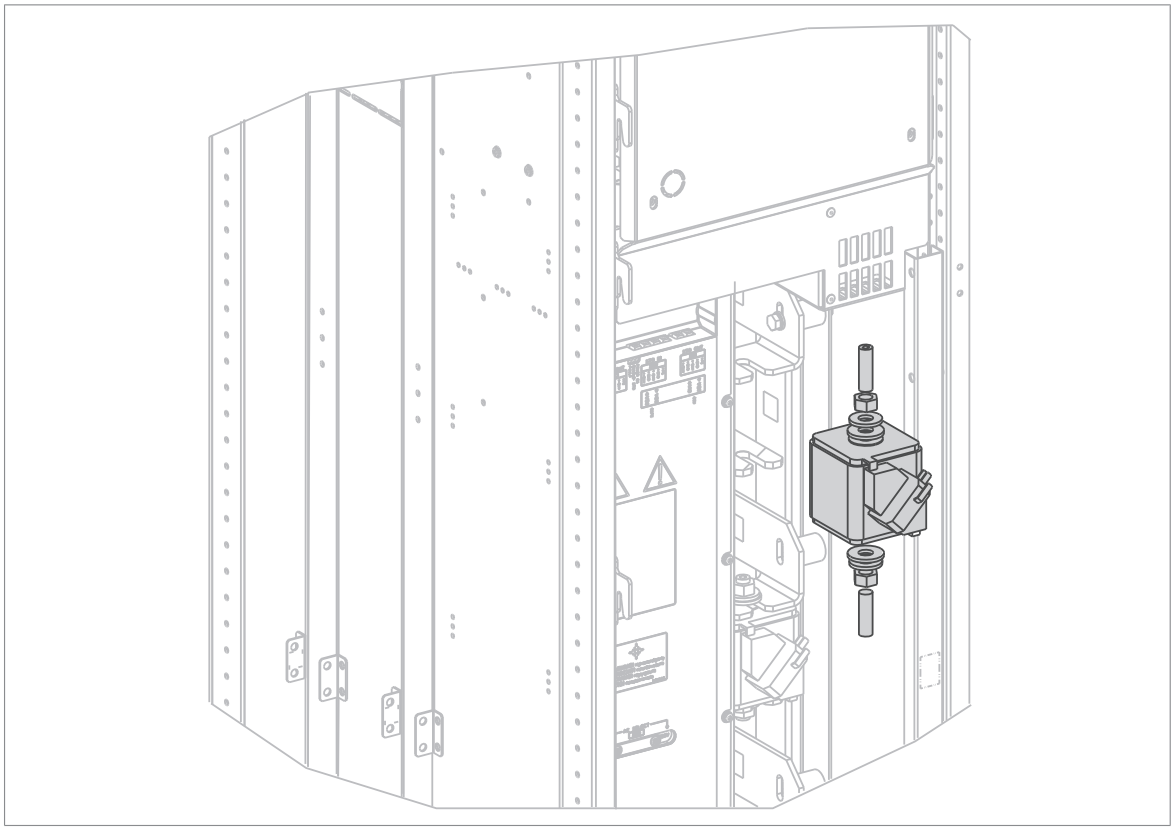

Control panel

Refer to ACS-AP-I, -S, -W and ACH-AP-H, -W Assistant control panels user's manual (3AUA0000085685 [English]).

Memory unit

Replacing the memory unit

After replacing a control unit, you can keep the existing parameter settings by transferring the memory unit from the defective control unit to the new control unit.

WARNING!
Obey the safety instructions given in ACS880 liquid-cooled multidrive cabinets and modules safety instructions (3AXD50000048633 [English]). If you ignore the safety instructions, injury or death, or damage to the equipment can occur.

If you are not a qualified electrical professional, do not do installation or maintenance work.

WARNING!
Do not remove or insert the memory unit when the control unit is powered.

1. Stop the drive and do the steps in section Electrical safety precautions (page 35) before you start the work.
2. Make sure that the control unit is not powered.
3. Remove the fastening screw and pull the memory unit out.
4. Install a memory unit in reverse order.

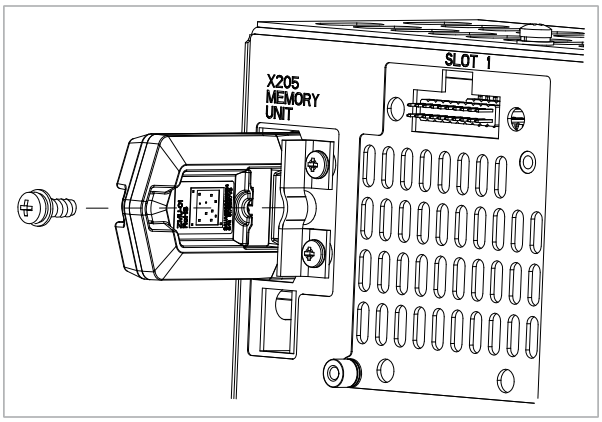

11

Internal cooling circuit

Contents of this chapter

The cooling system of a liquid-cooled drive consists of two circuits: the internal cooling circuit and the external cooling circuit. The internal cooling circuit covers the heat-generating electrical components of the drive and transfers the heat to the cooling unit. In the cooling unit, the heat is transferred to the external cooling circuit which is usually part of a larger external cooling system. This chapter deals with the internal cooling circuit.

Applicability

The information in this chapter is applicable to cabinet-built ACS880 liquid-cooled drives. Except where otherwise indicated, the information is also applicable to drives built out of ACS880 liquid-cooled multidrives modules.

Internal cooling system

Each cubicle has an inlet and an outlet manifold, fitted with a stop valve and a drain valve. The stop valves can be closed to isolate all modules in the cubicle from the main cooling circuit.

In cabinet line-ups built by ABB, valves are color-coded:

- Blue – Open during operation
- Red – Closed during operation

The following diagram shows the coolant pipe connections in a drive system consisting of a supply unit and an inverter unit. Other units, such as brake units, DC/DC converter units have similar cooling arrangements. Other cubicles containing components that require cooling may also contain heat exchangers.

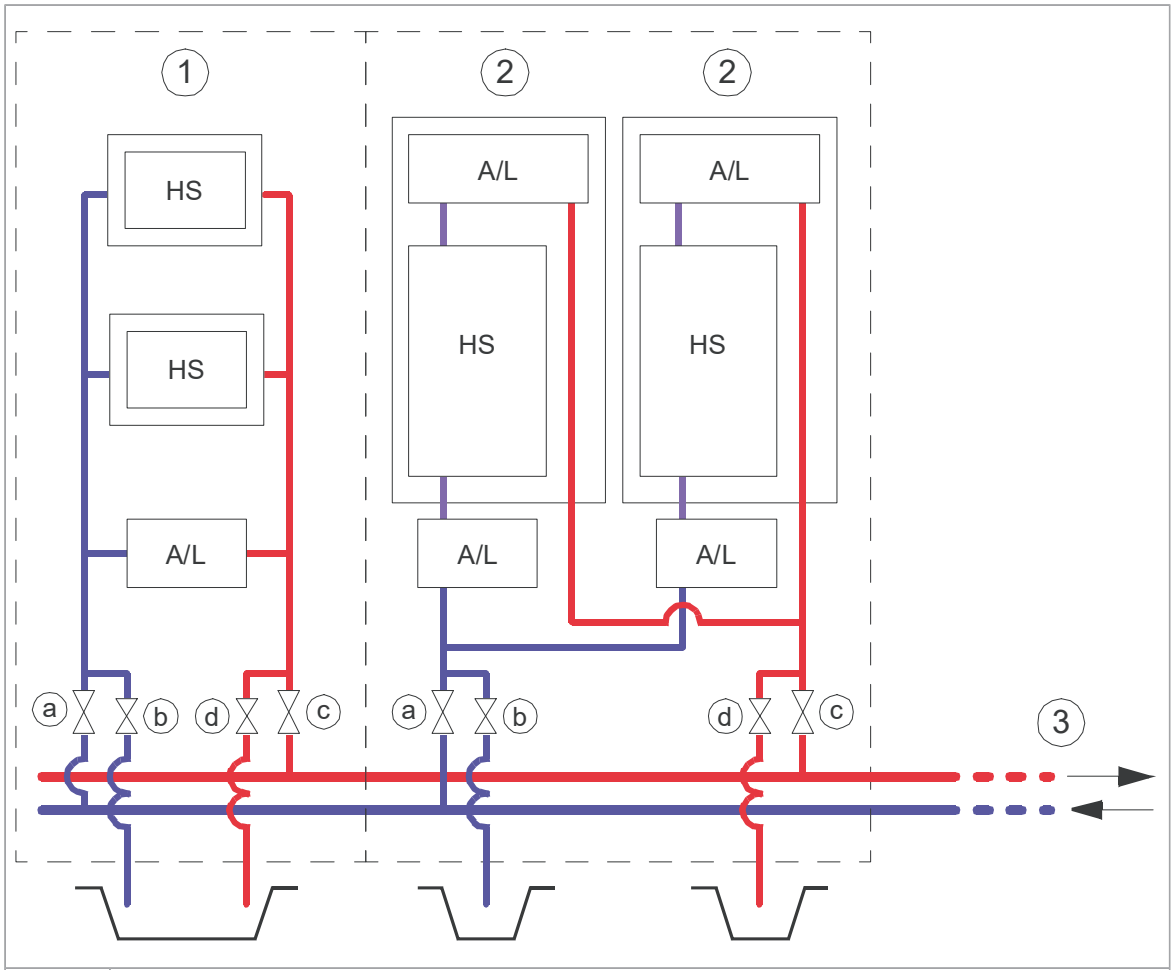

1	Supply modules. The drawing shows the configuration of a diode supply unit with two modules, ie. there is a common air-to-liquid exchanger in the cubicle. With an IGBT supply unit, each module has a dedicated air-to-liquid exchanger as shown for item 2.
2	Inverter modules
3	To/From cooling unit
A/L	Air-to-liquid heat exchanger
HS	Heat sink
a	Inlet valve
b	Inlet-side drain valve
c	Outlet valve
d	Outlet-side drain valve

The coolant used with ACS880 liquid-cooled drive systems is Antifrogen® L 25% or 50% mixture. See Coolant specification (page 96).

Connection to a cooling unit

Connection to an ACS880-1007LC cooling unit

Refer to ACS880-1007LC cooling unit user's manual (3AXD50000129607 [English]).

Connection to a custom cooling unit

General requirements

Equip the system with an expansion vessel to damp pressure rise due to volume changes when the temperature varies. Equip the system with a pump that provides a nominal flow and pressure. Keep the pressure within the limits specified in Technical data (page 96). Install a pressure regulator to make sure that the maximum permissible operating pressure is not exceeded.

Install a bleed valve at the highest point of the cooling circuit, and a drain valve at the lowest point.

The materials that can be used are listed in Cooling circuit materials (page 98).

Coolant temperature control

The temperature of the coolant in the internal cooling circuit must be kept within the limits specified in Technical data (page 96). Note that the minimum temperature is dependent on ambient temperature and relative humidity.

Filling up and bleeding the internal cooling circuit

Both the drive and coolant must be at room temperature before filling up the cooling circuit.

WARNING!
Make sure that the maximum permissible operating pressure is not exceeded. When necessary regulate the pressure to appropriate level by draining excess coolant out of the system.

WARNING!
Bleeding of the cooling circuit is very important and has to be done with great care. Air bubbles in the cooling circuit may reduce or completely block coolant flow and lead to overheating. Let the air out of the cooling system while filling in coolant and, eg. after any power module replacements.

Drive line-ups with an ACS880-1007LC cooling unit

Obey the filling up and bleeding instructions in ACS880-1007LC cooling unit user's manual (3AXD50000129607 [English]).

Drive line-ups with a custom cooling unit

Note:

- In filling up the system, the drain valves in the line-up are used only to vent the air from the circuit so that it can be displaced by the coolant. The actual bleeding of the circuit must be done via an external bleed valve installed at the highest point of the cooling circuit. The most practical location for the valve is usually near or at the cooling unit.
- Observe the instructions given by the manufacturer of the cooling unit. Pay special attention to filling up and bleeding the pumps properly as they may be damaged if operated when dry.
- Draining coolant into the sewer system is not allowed.

1. Open the bleed valve at the cooling unit.
2. Open the inlet valve and the outlet-side drain valve of one cubicle. Keep the outlet valve and the inlet-side drain valve closed.
3. Attach a hose to the outlet-side drain valve and lead it into a suitable container.
4. Fill the circuit with coolant. For the coolant specification, refer to section Coolant specification (page 96).
   To minimize foaming, do not exceed the filling flow rate of 5 l/min (1.3 US gallon/min).
5. As the piping and modules in the cubicle fills up, coolant starts to flow from the hose. Let some coolant flow out, then close the drain valve.
6. Close the inlet valve.
7. Repeat steps 2…6 for all cubicles in the line-up.
8. Open the inlet and outlet valves in all cubicles. Let any air remaining in the system out through the bleed valve at the cooling unit.

9. Close the bleed valve at the cooling unit.
10. Continue to fill in coolant until a base pressure of approximately 250 kPa is achieved.
11. Open the bleed valve of the pump to let out any air.
12. Re-check the pressure and add coolant if necessary.
13. Start the coolant pump. Let any air remaining in the system out through the bleed valve at the cooling unit.
14. After one to two minutes, stop the pump or block the coolant flow with a valve.
15. Re-check the pressure and add coolant if necessary.
16. Repeat steps 13…15 a few times until all air is let out of the cooling circuit. Listen for a humming sound and/or feel the piping for vibration to find out if there is still air left in the circuit.

Draining the internal cooling circuit

The modules in each cubicle can be drained through the drain valves without draining the whole internal cooling circuit.

WARNING!
Hot, pressurized coolant can be present in the cooling circuit. Do not work on the cooling circuit before the pressure is released by stopping the pumps and draining coolant.

1. Attach hoses to each drain valve in the cubicle to be drained. Lead the hoses into a suitable container. Make sure the ends of the hoses are not immersed in coolant at any point so that air can displace the coolant in the system.
2. Open the drain valves. Wait until all coolant has drained.

   Note: Draining coolant into the sewer system is not allowed.
3. If required, dry the piping with compressed oil-free air of less than 6 bar.
4. If the drive is to be stored in temperatures below 0 °C (32 °F),
   - dry the cooling circuit with air,
   - fill the cooling circuit with coolant specified under Coolant specification (page 96).
   - drain the cooling circuit again.

Maintenance intervals

As a general rule, the quality of the coolant should be checked at intervals of two years. This can be done by distributors of Antifrogen® L (see www.clariant.com) if a 250 milliliter sample is provided.

Technical data

Coolant specification

Coolant type

Antifrogen® L (by Clariant International Ltd, www.clariant.com) 25% or 50% mixture, available from Clariant distributors and ABB Service representatives.

Note: Do not dilute the coolant. It is ready to use.

Antifrogen® L 25% mixture is usable in storage temperatures down to -16 °C (3.2 °F). Antifrogen® L 50% mixture is usable in storage temperatures down to -40 °C (-40 °F).

Note that operation below 0 °C (32 °F) is not permitted regardless of the freezing point of the coolant.

WARNING!
The warranty does not cover damage that occurs from the use of incorrect coolant.

Temperature limits

Ambient temperature: See the technical data of the drive/unit.

Freeze protection: The freezing point of the coolant is determined by the concentration of heat transfer fluid in the mixture.

The higher the concentration of heat transfer fluid, the higher the viscosity of the coolant. This results in a higher pressure loss in the system. See Pressure limits (page 98).

The nominal current ratings of drive system modules apply to an Antifrogen® L / water solution of 25/75% (volume). With the Antifrogen® L concentration between 25% and 50%, the drive output current must be derated by 1/3 percentage point per 1 p.p. increase in Antifrogen® L concentration. The drawing below shows the derating factor *(k)* in relation to Antifrogen® L concentration.

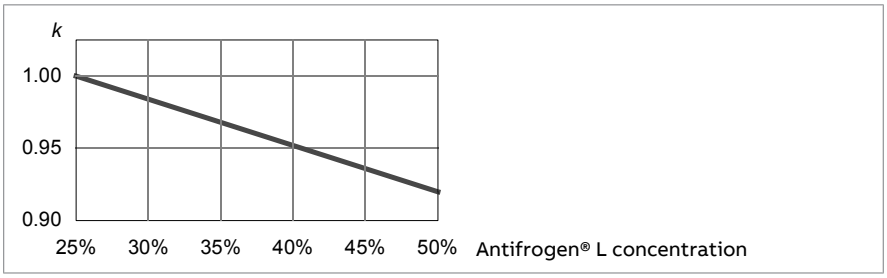

Incoming coolant temperature:

- 0…40 °C (32…104 °F): no drive output current derating required
- 40…45 °C (104…113 °F): drive output current must be derated by 2 percentage points per 1 °C (1.8 °F) temperature increase, as shown by curve (a).
- 45…50 °C (113…122 °F):
  - If components with a maximum operating temperature of 55 °C (131 °F) are installed in the same space as the drive modules, drive output current must

be derated by 6 percentage points per 1 °C (1.8 °F) temperature increase, as shown by curve (c).

- If there are no components with a maximum operating temperature of 55 °C (131 °F) installed in the same space as the drive modules, drive output current must be derated by 2 percentage points per 1 °C (1.8 °F) temperature increase, as shown by curve (b).

The drawing below shows the derating factor *(k)* in relation to coolant temperature.

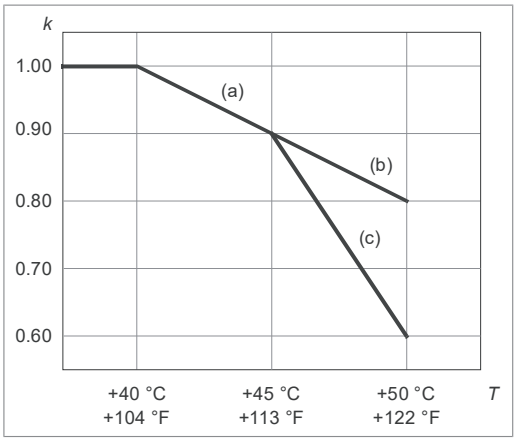

1-phase (NBRW-669) brake modules (option +D150): 0…50 °C (32…122 °F): no current derating required

Condensation is not permitted. The minimum coolant temperature to avoid condensation (at an atmospheric pressure of 1 bar) is shown below as a function of relative humidity (RH) and ambient temperature (T_{air}).

T_{air} (°C)	Min. $T_{coolant}$ (°C)				
	RH = 95%	**RH = 80%**	**RH = 65%**	**RH = 50%**	**RH = 40%**
5	4.3	1.9	-0.9	-4.5	-7.4
10	9.2	6.7	3.7	-0.1	-3.0
15	14.2	11.5	8.4	4.6	1.5
20	19.2	16.5	13.2	9.4	6.0
25	24.1	21.4	17.9	13.8	10.5
30	29.1	26.2	22.7	18.4	15.0
35	34.1	31.1	27.4	23.0	19.4
40	39.0	35.9	32.2	27.6	23.8
45	44.0	40.8	36.8	32.1	28.2
50	49.0	45.6	41.6	36.7	32.8
55	53.9	50.4	46.3	42.2	37.1

	= Not permitted as standard but the coolant temperature must be 0 °C (32 °F) or more.
Example:	At an air temperature of 45 °C and relative humidity of 65% the coolant temperature must not be less than +36.8 °C

Maximum temperature rise: Depends on heat losses and mass flow. Typically 10 °C (18 °F) with nominal losses and flow.

Pressure limits

Base pressure: 250 kPa (recommended); 300 kPa (maximum). “Base pressure” denotes the pressure of the system compared with the atmospheric pressure when the cooling circuit is filled with coolant.

Air counterpressure in expansion vessel (with ACS880-1007LC cooling unit): 80 kPa

Design pressure (PS): 600 kPa

Nominal pressure difference: 120 kPa with Antifrogen® L 25% coolant solution, 140 kPa with Antifrogen® L 50% coolant solution. This has to be taken into account when dimensioning the liquid cooling circuit.

Maximum pressure difference: 160 kPa

Coolant flow rate limits

The maximum coolant flow rate for all drive equipment is 1.3 × nominal. See the technical data chapter for nominal values.

Cooling circuit materials

Materials used in the internal cooling circuit are listed below.

- stainless steel AISI 316L (UNS 31603)
- heavy gauge aluminum
- plastic materials such as PA, PEX and PTFE

  Note: PVC hoses are not suitable for use with antifreeze.
- rubber gasketing NBR (nitrile rubber).

WARNING!
If you connect external piping to the internal cooling circuit, use only materials that are specified above. Other materials can cause galvanic corrosion. If the external piping contains other materials, use a cooling unit with a heat exchanger (for example, ACS880-1007LC) to keep the external piping separate from the internal cooling circuit.

12

Technical data

Contents of this chapter

This chapter contains the technical data.

Ratings

ACS880-607LC-...	Frame size	Resistor values		Ratings with R_{min}						
				No overload use			Cyclic load (1 min / 5 min)			
		R_{min}	R_{max}	I_1	I_2	$P_{cont-max}$ (S_n)	I_{max}	I_{dc}	I_{rms}	P_{br}
		Ohm	Ohm	A DC	A DC	kW (kVA)	A DC	A DC	A DC	kW
U_N = 690 V										
0870-7	R8i	3.0	3.6	781	310	870	370	999	351	1110
1300-7	R8i	2.0	2.4	1171	465	1300	555	1499	527	1660
1730-7	2×R8i	3.0	3.6	1562	621	1730	740	1998	702	2220
2600-7	2×R8i	2.0	2.4	2342	931	2600	1110	2997	1053	3330
3900-7	3×R8i	2.0	2.4	3514	1396	3900	1665	4496	1580	4990
5200-7	4×R8i	2.0	2.4	4685	1862	5200	2220	5994	2106	6650
6500-7	5×R8i	2.0	2.4	5856	2327	6500	2775	7493	2633	8320

ACS880-607LC-...	Frame size	Resistor values		Ratings with R_{max}						
				No overload use			Cyclic load (1 min / 5 min)			
		R_{min}	R_{max}	I_1	I_2	$P_{cont-max}$ (S_n)	I_{max}	I_{dc}	I_{rms}	P_{br}
		Ohm	Ohm	A DC	A DC	kW (kVA)	A DC	A DC	A DC	kW
U_N = 690 V										
0870-7	R8i	3.0	3.6	781	283	870	312	833	293	920
1300-7	R8i	2.0	2.4	1171	425	1300	468	1249	439	1390
1730-7	2×R8i	3.0	3.6	1562	567	1730	625	1665	585	1850
2600-7	2×R8i	2.0	2.4	2342	850	2600	937	2498	878	2770
3900-7	3×R8i	2.0	2.4	3514	1275	3900	1405	3746	1316	4160
5200-7	4×R8i	2.0	2.4	4685	1700	5200	1874	4995	1755	5540
6500-7	5×R8i	2.0	2.4	5856	2125	6500	2342	6244	2194	6930

Definitions

U_N	Nominal voltage
R_{min}	Minimum allowed resistance value of the brake resistor per one phase of the brake module.
R_{max}	Maximum resistance value of the brake resistor per one phase of the brake module.
Note:	Connect one resistor per brake chopper module phase. For example, a brake unit of frame size 2×R8i includes two brake chopper modules -> 2 × 3 resistors are needed.
No-overload use	
I_1	Input current. Input current with R_{min} is given in the type designation label.
I_2	Output current. This is indicated in the type designation label as 3x the value with R_{min} given in this table.
$P_{cont.max}$	Maximum continuous braking power per brake unit. 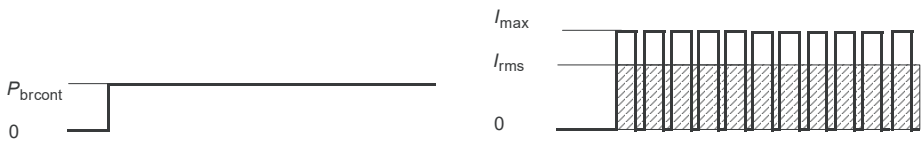
S_n	Apparent power
Cyclic load (1 min / 5 min)	
I_{max}	Peak brake current (DC) per brake chopper module phase.
I_{dc}	Input current
I_{rms}	Total rms DC current per brake unit phase during a period of 1 minute with braking power P_{br}.
P_{br}	Short term braking power per brake unit allowed for one minute every 5 minutes. 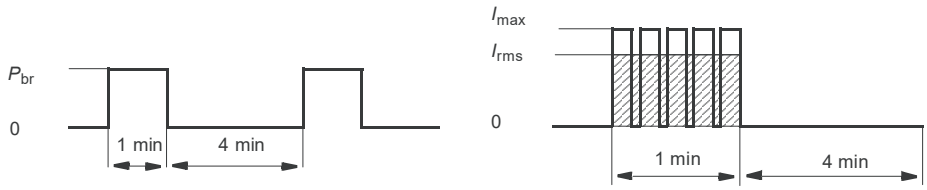

Example: Brake unit with two parallel connected modules

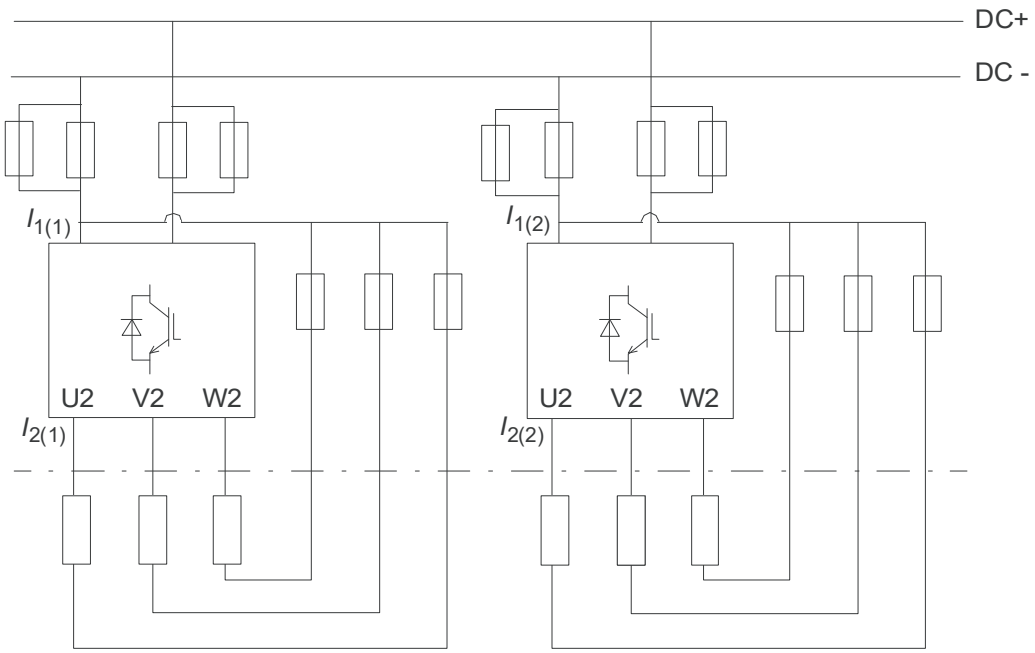

$I_1 = I_{1(1)} + I_{1(2)}$

$I_2 = I_{2(1)} + I_{2(2)}$

Derating

Surrounding air temperature derating

In the temperature range +45…55 °C (+113…131 °F), the rated output current is derated by 0.5 percentage points for every added 1 °C (1.8 °F). The output current can be calculated by multiplying the current given in the rating table by the derating factor *(k)*:

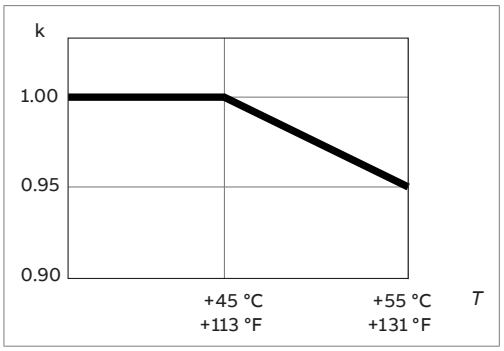

Coolant temperature derating

See section Temperature limits (page 96).

Antifreeze content derating

See section Temperature limits (page 96).

Altitude derating

At altitudes more than 1000 m (3281 ft) above sea level, the output current derating is 1 percentage point for every added 100 m (328 ft). For example, the derating factor for 1500 m (4921 ft) is 0.95. The maximum permitted installation altitude is given in the technical data.

For a more accurate derating, use the DriveSize PC tool.

Frame sizes and modules used

Brake unit type ACS880-607LC-...	Inverter module(s) used		
	Frame size	Qty	Type
U_N = 690 V			
0870-7	R8i	1	ACS880-104LC-0530A-7
1300-7	R8i	1	ACS880-104LC-0850A-7
1730-7	2×R8i	2	ACS880-104LC-0530A-7
2600-7	2×R8i	2	ACS880-104LC-0850A-7
3900-7	3×R8i	3	ACS880-104LC-0850A-7
5200-7	4×R8i	4	ACS880-104LC-0850A-7
6500-7	5×R8i	5	ACS880-104LC-0850A-7

Fuses

DC fuses (IEC)

ACS880-607LC-...	IEC			
	Type	Data	Qty (per module)	Qty (total)
U_N = 690 V				
0870-7	170M6500	1250 A, 1250 V	2	2
1300-7	2 x 170M6548	2 × 1000 A, 1100 V	2 × 2	2 × 2
1730-7	170M6500	1250 A, 1250 V	2	4
2600-7	2 x 170M6548	2 × 1000 A, 1100 V	2 × 2	2 × 2 × 2
3900-7	2 x 170M6548	2 × 1000 A, 1100 V	2 × 2	3 × 2 × 2
5200-7	2 x 170M6548	2 × 1000 A, 1100 V	2 × 2	4 × 2 × 2
6500-7	2 x 170M6548	2 × 1000 A, 1100 V	2 × 2	5 × 2 × 2

DC fuses (UL)

ACS880-607LC-...	UL			
	Type	Data	Qty (per module)	Qty (total)
U_N = 690 V				
0870-7	170M6500	1250 A, 1250 V	2	2
1300-7	170M6794	2000 A, 1250 V	2	2
1730-7	170M6500	1250 A, 1250 V	2	4
2600-7	170M6794	2000 A, 1250 V	2	4
3900-7	170M6794	2000 A, 1250 V	2	6
5200-7	170M6794	2000 A, 1250 V	2	8
6500-7	170M6794	2000 A, 1250 V	2	10

Resistor fuses (IEC and UL)

ACS880-607LC-...	Type	Data	Qty (per module)	Qty (total)
U_N = 690 V				
0870-7	170M6542	500 A, 1250 V	1	3
1300-7	170M6546	800 A, 1250 V	1	3
1730-7	170M6542	500 A, 1250 V	1	6
2600-7	170M6546	800 A, 1250 V	1	6
3900-7	170M6546	800 A, 1250 V	1	9
5200-7	170M6546	800 A, 1250 V	1	12
6500-7	170M6546	800 A, 1250 V	1	15

Dimensions, weights and free space requirements

ACS880-607LC-...	Height [1]	Height [2]	Space above	Width [1]	Width [2]	Depth	Weight [3]	Weight [4]
	mm	mm	mm	mm	mm	mm	kg	kg
U_N = 690 V								
0870-7	2002	2056	250	400	700	644	370	610
1300-7	2002	2056	250	400	700	644	370	610
1730-7	2002	2056	250	800	1400	644	740	1220
2600-7	2002	2056	250	800	1400	644	740	1220
3900-7	2002	2056	250	1200	2100	644	1110	1830
5200-7	2002	2056	250	1600	2800	644	1480	2440
6500-7	2002	2056	250	2000	3500	644	1850	3050

[1] Bottom entry and exit of cables.
[2] Top entry and exit of cables.
[3] Bottom entry and exit of cables. With all options included.
[4] Top entry and exit of cables. With all options included.

Losses, cooling data and noise

ACS880-607LC-...	Coolant volume				Coolant flow		Heat dissipation	Pressure loss	Noise
	Module		Cabinet		l/min	US gal/min	kW	kPa	dB(A)
	l	US gal	l	US gal					
U_N = 690 V									
0870-7	1.6	0.4	2.8	0.7	16	4.2	3.3	120	63
1300-7	1.6	0.4	2.8	0.7	16	4.2	5.1	120	63
1730-7	3.2	0.8	5.6	1.5	32	8.5	6.5	120	66
2600-7	3.2	0.8	5.6	1.5	32	8.5	10.1	120	66
3900-7	4.8	1.3	8.4	2.2	48	12.7	15.1	120	68
5200-7	6.4	1.7	11.2	3.0	64	16.9	20.1	120	69
6500-7	8.0	2.1	14.0	3.7	80	21.1	25.2	120	70

Terminal and cable entry data for the resistor cables

These drawings show the terminal and cable entry dimensions for the resistor cables. The dimensions are given in millimeters. Tightening torques depend on the bolt size and type. See section Tightening torques (page 108).

Bottom entry and exit of cables

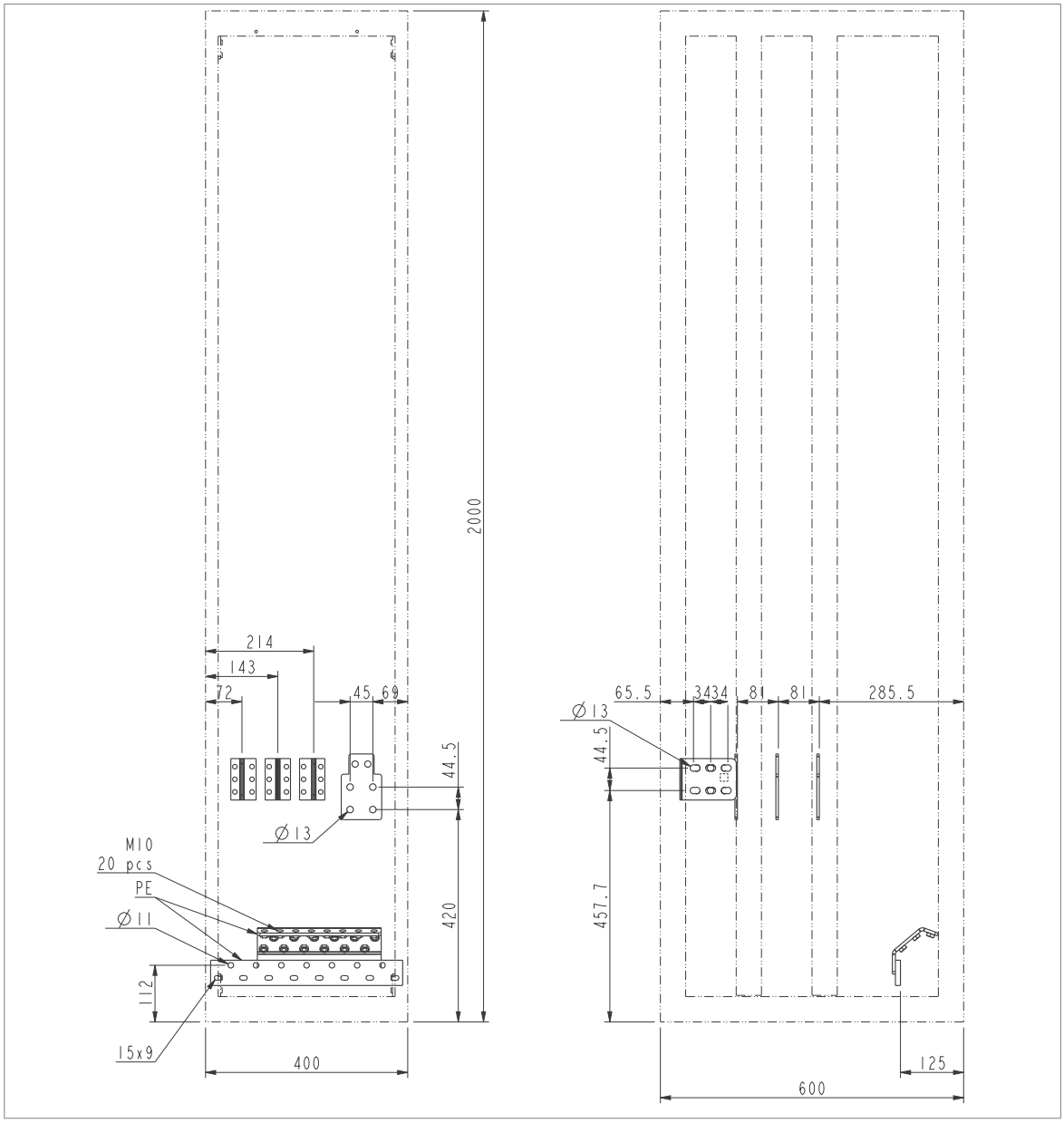

Dimensions in mm

1 mm = 0.0394 in

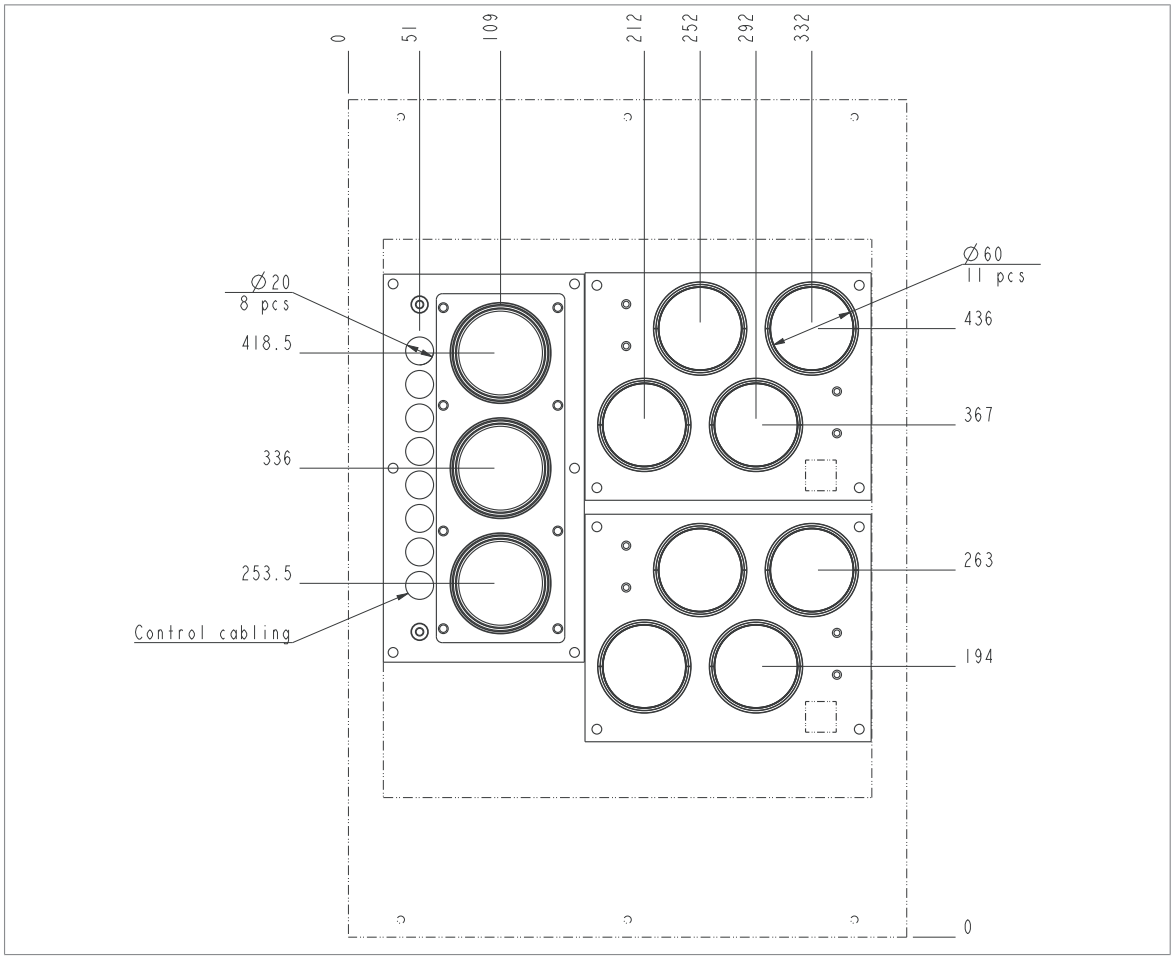

Dimensions in mm

1 mm = 0.0394 in

Top entry and exit of cables

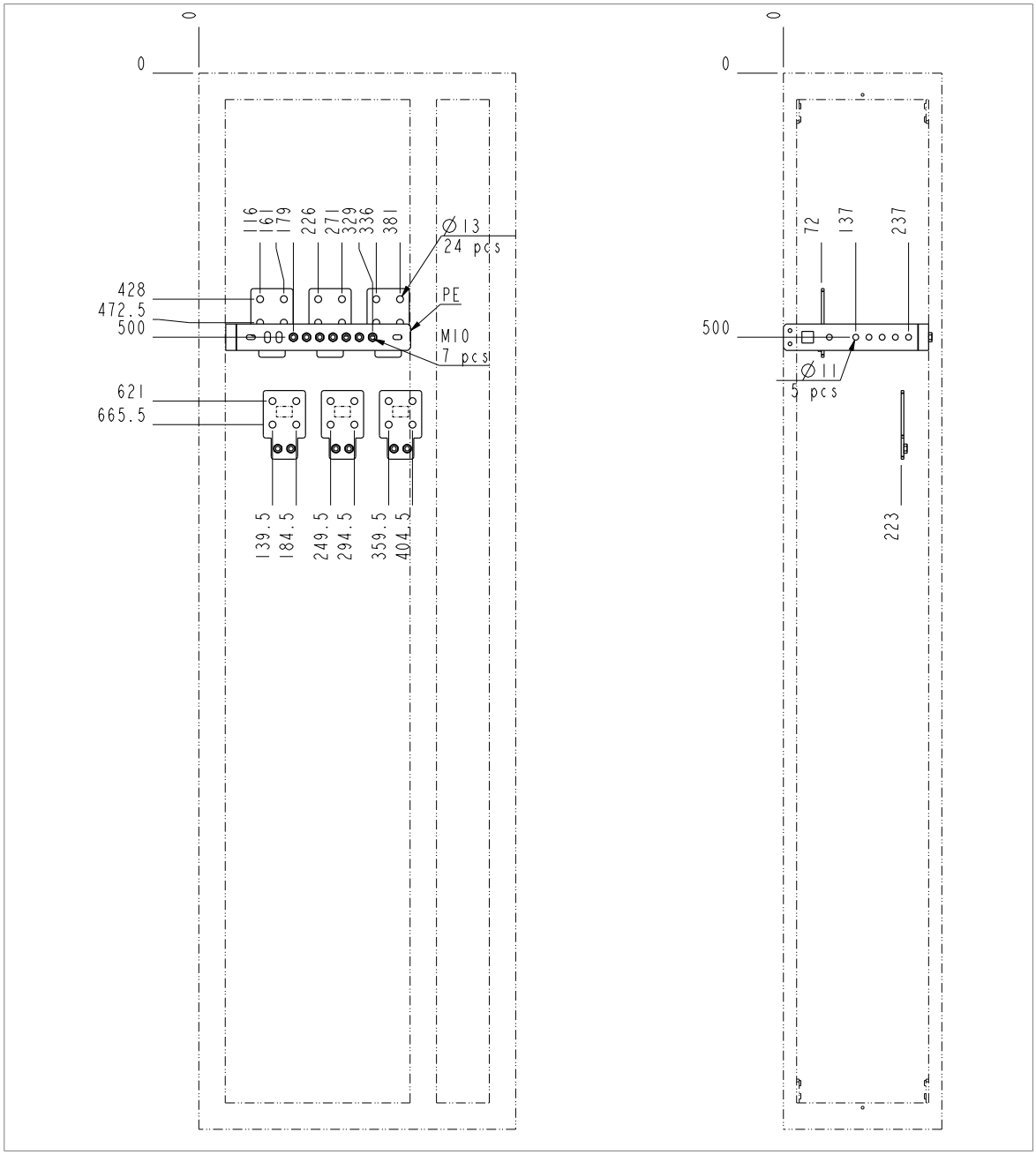

Dimensions in mm

1 mm = 0.0394 in

Tightening torques

Unless a tightening torque is specified in the text, the following torques can be used.

Electrical connections

Size	Torque	Strength class
M3	0.5 N·m (4.4 lbf·in)	4.6...8.8
M4	1 N·m (9 lbf·in)	4.6...8.8
M5	4 N·m (35 lbf·in)	8.8
M6	9 N·m (6.6 lbf·ft)	8.8
M8	22 N·m (16 lbf·ft)	8.8
M10	42 N·m (31 lbf·ft)	8.8
M12	70 N·m (52 lbf·ft)	8.8
M16	120 N·m (90 lbf·ft)	8.8

Mechanical connections

Size	Max. torque	Strength class
M5	6 N·m (53 lbf·in)	8.8
M6	10 N·m (7.4 lbf·ft)	8.8
M8	24 N·m (17.7 lbf·ft)	8.8

Insulation supports

Size	Max. torque	Strength class
M6	5 N·m (44 lbf·in)	8.8
M8	9 N·m (6.6 lbf·ft)	8.8
M10	18 N·m (13.3 lbf·ft)	8.8
M12	31 N·m (23 lbf·ft)	8.8

Cable lugs

Size	Max. torque	Strength class
M8	15 N·m (11 lbf·ft)	8.8 (A2-70 or A4-70)
M10	32 N·m (23.5 lbf·ft)	8.8
M12	50 N·m (37 lbf·ft)	8.8

Typical resistor cable sizes

This table gives copper cable types. Cable sizing is based on max. 9 cables laid on a cable ladder side by side, three ladder type trays one on top of the other, ambient temperature 30 °C, PVC insulation, surface temperature 70 °C and 90 °C (EN 60204-1 and IEC 60364-5-2/2001). For other conditions, size the cables according to local safety regulations, appropriate input voltage and the load current of the drive. $I_{rms\ dim}$ is the dimensioning current.

ACS880-607LC-...	Frame size	$I_{rms\ dim}$	Cable data	
			Cable, T=70 °C	Cable, T=90 °C
		A	mm²	mm²
U_N = 690 V				
0870-7	R8i	372	3×(2×(3×120+70))	3×(3×240+120)
1300-7	R8i	559	3×(2×(3×240+120))	3×(2×(3×150+70))
1730-7	2×R8i	745	2×(3×(2×(3×120+70)))	2×(3×(3×240+120))
2600-7	2×R8i	1117	2×(3×(2×(3×240+120)))	2×(3×(2×(3×150+70)))
3900-7	3×R8i	1676	3×(3×(2×(3×240+120)))	3×(3×(2×(3×150+70)))
5200-7	4×R8i	2234	4×(3×(2×(3×240+120)))	4×(3×(2×(3×150+70)))
6500-7	5×R8i	2793	5×(3×(2×(3×240+120)))	5×(3×(2×(3×150+70)))

Maximum cable length

The maximum cable length of the resistor cable(s) is 300 m (984 ft). Keep the cable as short as possible in order to minimize the EMC emissions and stress on chopper IGBTs. The longer the cable the higher the EMC emissions. The longer the cable the higher the inductive load and voltage peaks over the IGBT semiconductors of the brake chopper.

Resistor connection

Voltage (U_2)	0…U_1 3-phase symmetrical.
	For ACS880-104LC-xxxx-7 modules: This is indicated in the type designation label as typical output voltage levels 3×0…742 / 849 / 976 V DC.
Maximum resistor cable length	300 m (984 ft)
Busbar material	Tin-plated copper

Control unit (board) connection data

See Connector data (page 58).

Auxiliary circuit current consumption

Auxiliary circuit current consumption varies depending on the actual drive configuration and options. Contact ABB for the delivery-specific value.

Energy efficiency data (ecodesign)

Energy efficiency data is not provided for the drive/unit. The multidrives are not in the scope of the EU ecodesign requirements (Regulation EU/2019/1781) or the UK ecodesign requirements (Regulation SI 2021 No. 745).

Efficiency

Approximately 99% at nominal power level.

Protection classes

Degrees of protection (IEC/EN 60529)	IP42 (standard), IP54 (option +B055)
Enclosure types (UL50)	UL Type 1 (standard), UL Type 12 (option +B055). For indoor use only.
Arcing class (IEC TR 61641)	B – ASSEMBLY providing personnel and ASSEMBLY protection under arcing conditions. Tested at the following voltage with an arcing current of 65 kA for 300 milliseconds: • 400 V units (indicated by "-3" in drive type): 420 V • 500 V units (indicated by "-5" in drive type): 550 V • 690 V units (indicated by "-7" in drive type): 760 V
Overvoltage category (IEC/EN 60664-1)	III, except for auxiliary power connections (fan, control, heating, lighting, cooling unit pump etc) which are category II.
Protective class (IEC/EN 61800-5-1)	I

Ambient conditions

Environmental limits for the drive are given below. The drive is to be used in a heated, indoor, controlled environment.

	Operation installed for stationary use	**Storage in the protective package**	**Transportation in the protective package**
Installation site altitude	0…2000 m (0…6562 ft) above sea level. For altitudes over 2000 m, contact ABB. Output derated above 1000 m (3281 ft).	-	-
Air temperature	0 … +45 °C (+32 … +113 °F), no condensation allowed. Output derated in the range +45 … +55 °C (+113 … +131 °F).	-40 … +70 °C (-40 … +158 °F)	-40 … +70 °C (-40 … +158 °F)
Relative humidity	Max. 95%	Max. 95%	Max. 95%
	No condensation allowed. Maximum allowed relative humidity is 60% in the presence of corrosive gases.		
Contamination	IEC/EN 60721-3-3:2002 Chemical gases: Class 3C2 Solid particles: Class 3S2. No conductive dust allowed.	IEC 60721-3-1:1997 Chemical gases: Class 1C2 Solid particles: Class 1S3 (packing must support this, otherwise 1S2)	IEC 60721-3-2:1997 Chemical gases: Class 2C2 Solid particles: Class 2S2
Pollution degree IEC/EN 60664-1	2		

	Operation installed for stationary use	Storage in the protective package	Transportation in the protective package
Vibration IEC/EN 61800-5-1 IEC 60068-2-6:2007, EN 60068-2-6:2008	IEC/EN 60721-3-3:2002 10…57 Hz: max. 0.075 mm amplitude 57…150 Hz: 1 *g* Units with marine construction (option +C121): Max. 1 mm (0.04 in) (5 … 13.2 Hz), max. 0.7 *g* (13.2 … 100 Hz) sinusoidal	IEC/EN 60721-3-1:1997 10…57 Hz: max. 0.075 mm amplitude 57…150 Hz: 1 *g*	IEC/EN 60721-3-2:1997 2…9 Hz: max. 3.5 mm amplitude 9…200 Hz: 10 m/s^2 (32.8 ft/s^2)
Shock IEC 60068-2-27:2008, EN 60068-2-27:2009	Not allowed	With packing max. 100 m/s^2 (328 ft/s^2) 11 ms	With packing max. 100 m/s^2 (328 ft/s^2) 11 ms

Materials

See *ACS880 cabinet-installed drives recycling instructions and environmental information* (3AXD50000153909 [English]).

Color

RAL 7035 and RAL 9017.

Package

Standard package (Container package) Vertical	**Materials:** Wood, PE (VCI film), VCI emitter, clay desiccant, PET strap, metal fixing clamps and screws, packing tape. **Transport method:** Road and air transport and sea transport in container. **Storage conditions (IEC 60721-3-1):** 1K20: Up to 24 months in enclosed conditions (full temperature and humidity control). 1K22: Up to 6 months in enclosed conditions (no temperature or humidity control). 1K23, 1K24: Up to 3 months in sheltered conditions (roof providing protection from direct rain and sun). 1K25…1K27: Up to 48 hours between loading operations in open-air conditions (no protection).

Seaworthy package (option +P912) Vertical	**Materials:** Wood, plywood, PE (VCI film), VCI emitter, clay desiccant, metal fixing clamps and screws, packing tape. **Transport method:** Road and air transport and sea transport in container or deck. **Storage conditions (IEC 60721-3-1):** 1K20: Up to 24 months in enclosed conditions (full temperature and humidity control). 1K22: Up to 12 months in enclosed conditions (no temperature or humidity control). 1K23, 1K24: Up to 12 months in sheltered conditions (roof providing protection from direct rain and sun). 1K25…1K27: Up to 1 month in open-air conditions (no protection). Not recommended, but can be temporarily allowed.

Disposal

The main parts of the drive can be recycled to preserve natural resources and energy. Product parts and materials should be dismantled and separated.

Generally all metals, such as steel, aluminum, copper and its alloys, and precious metals can be recycled as material. Plastics, rubber, cardboard and other packaging material can be used in energy recovery.

Printed circuit boards and DC capacitors need selective treatment according to IEC 62635 guidelines.

To aid recycling, most plastic parts are marked with an appropriate identification code. In addition, components containing substances of very high concern (SVHCs) are listed in European Chemicals Agency's SCIP database. SCIP is the database for information on Substances of Concern In articles as such or in complex objects (Products) established under the Waste Framework Directive (2008/98/EC). For further information, contact your local ABB distributor or consult European Chemicals Agency's SCIP database to find out which SVHCs are used in the drive, and to find out where those components are located.

Contact your local ABB distributor for further information on environmental aspects. End of life treatment must follow international and national regulations.

For more information on ABB end of life services, see new.abb.com/service/end-of-lifeservices.

Applicable standards

See *ACS880 liquid-cooled multidrive cabinets and modules electrical planning (3AXD50000048634 [English]).*

Markings

See *ACS880 liquid-cooled multidrive cabinets and modules electrical planning (3AXD50000048634 [English]).*

Disclaimers

Generic disclaimer

The manufacturer shall have no obligation with respect to any product which (i) has been improperly repaired or altered; (ii) has been subjected to misuse, negligence or accident; (iii) has been used in a manner contrary to the manufacturer’s instructions; or (iv) has failed as a result of ordinary wear and tear.

Cyber security disclaimer

This product is designed to be connected to and to communicate information and data via a network interface. It is Customer's sole responsibility to provide and continuously ensure a secure connection between the product and Customer network or any other network (as the case may be). Customer shall establish and maintain any appropriate measures (such as but not limited to the installation of firewalls, application of authentication measures, encryption of data, installation of anti-virus programs, etc.) to protect the product, the network, its system and the interface against any kind of security breaches, unauthorized access, interference, intrusion, leakage and/or theft of data or information.

ABB and its affiliates are not liable for damages and/or losses related to such security breaches, any unauthorized access, interference, intrusion, leakage and/or theft of data or information.

13

Dimension drawings

Contents of this chapter

This chapter contains dimension drawings for the brake unit.

Brake unit with bottom exit

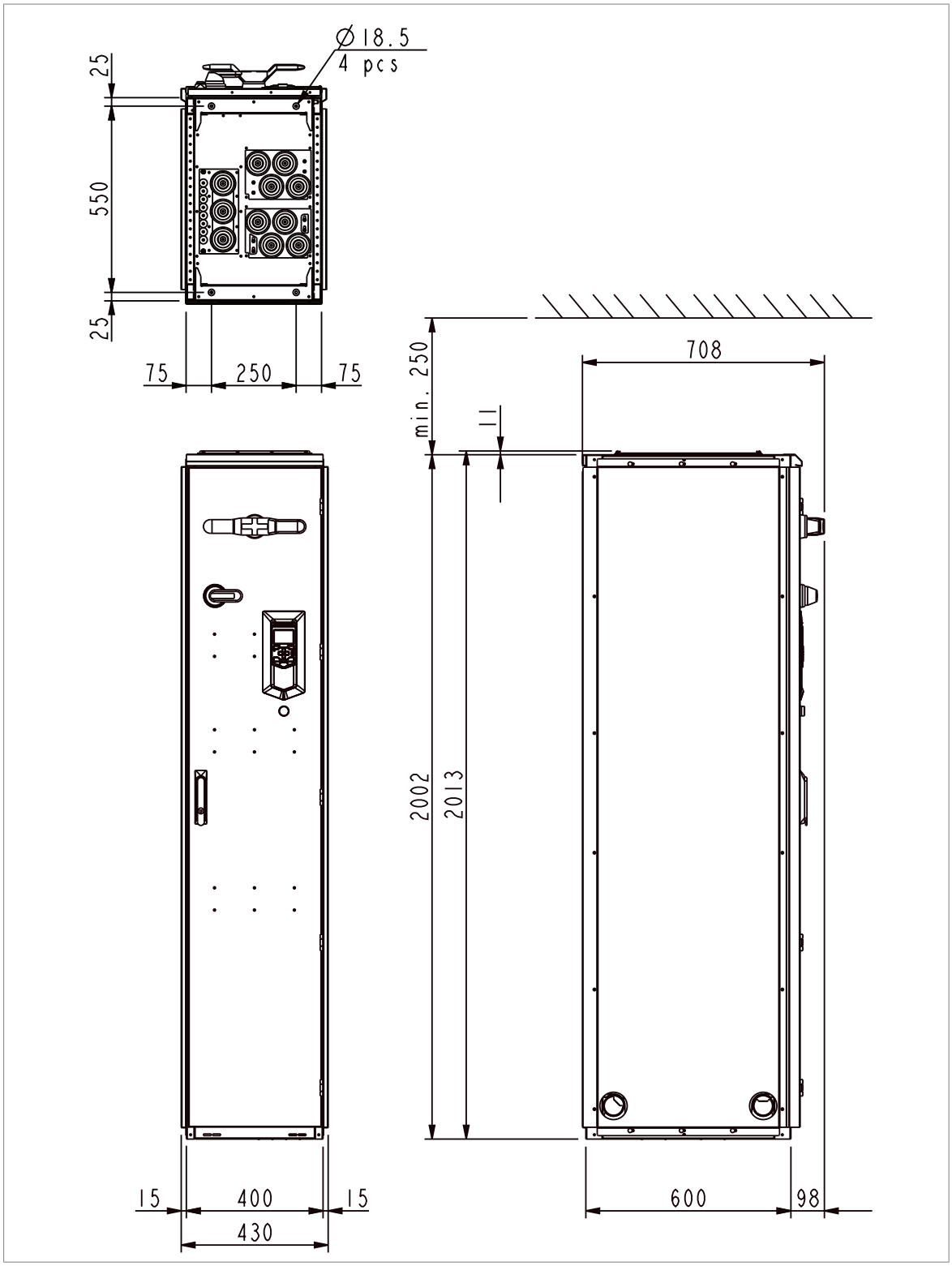

Dimensions in mm

1 mm = 0.0394 in

Brake unit with top exit

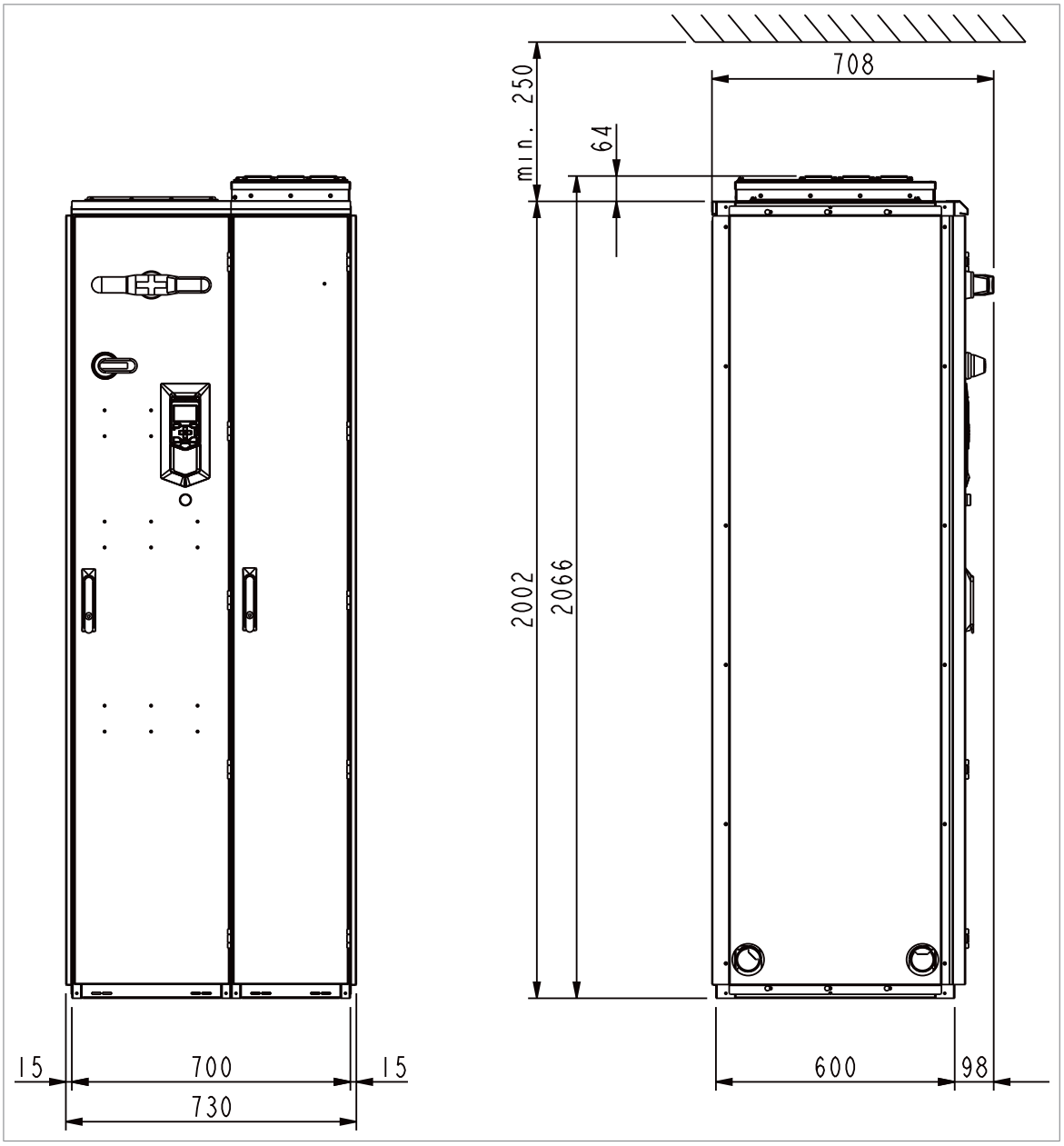

Dimensions in mm

1 mm = 0.0394 in

Top	Bottom
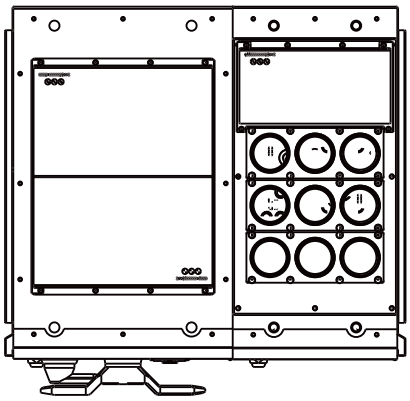	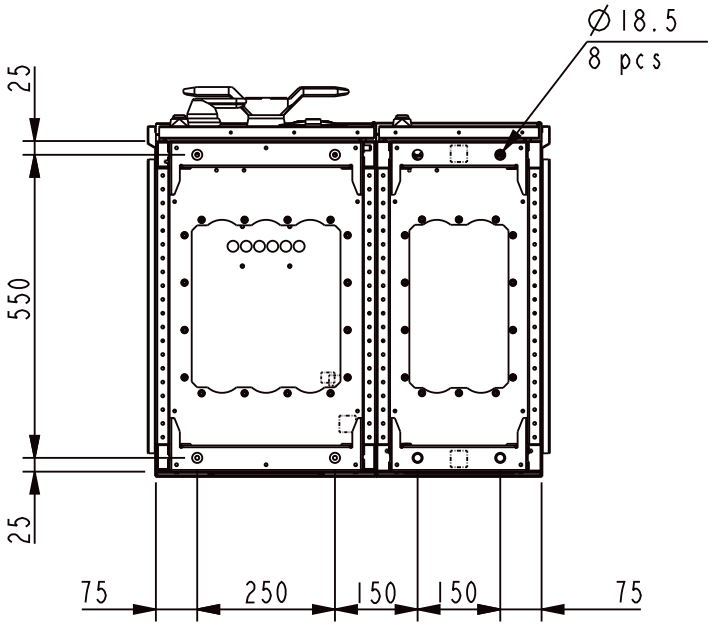

Dimensions in mm

1 mm = 0.0394 in

Further information

Product and service inquiries

Address any inquiries about the product to your local ABB representative, quoting the type designation and serial number of the unit in question. A listing of ABB sales, support and service contacts can be found by navigating to www.abb.com/searchchannels.

Product training

For information on ABB product training, navigate to new.abb.com/service/training.

Providing feedback on ABB manuals

Your comments on our manuals are welcome. Navigate to new.abb.com/drives/manuals-feedback-form.

Document library on the Internet

You can find manuals and other product documents in PDF format on the Internet at www.abb.com/drives/documents.

a317 (working)
PDF-A4
Created: 2023-10-09, 13:58:48

www.abb.com/drives

3AXD50000581627B

© Copyright 2023 ABB. All rights reserved.
Specifications subject to change without notice.

3AXD50000581627 Rev B (EN) 2023-08-22