ABB DRIVES

ACS880-11..., ACS880-31..., ACH580-31... and ACQ580-31...+C135 drives with flange mounting kit

Supplement

ACS880-11…, ACS880-31…, ACH580-31… and ACQ580-31…+C135 drives with flange mounting kit

Supplement

Table of contents

3. Mechanical installation

3AXD50000349838 Rev C
EN
Original instructions
EFFECTIVE: 2023-10-24

Table of contents

1 Introduction to the supplement

Contents of this chapter 7
Applicability 7
Target audience 7
Purpose of the supplement 7
Related documents 8

2 Hardware description

Contents of this chapter 9
Product overview 9
Layout and mounting position 9
Example: tilted position, frame R3 10
Example: upright position, frames R6 and R8 11
Degree of protection 11
Special requirements 13
Ordering codes 13

3 Mechanical installation

Contents of this chapter 15
Safety instructions 15
Examining the installation site 16
Additional requirements for cabinet installations 17
Necessary tools 17
Moving the drive 17
Unpacking and examining the delivery 17
Transport package contents 17
Frame R3 18
Frames R6 and R8 19
Flange mounting kit package contents 20
Frame R3 20
Frames R6 and R8 21
Mounting template 22
Installing the drive 23
Free space requirements 23
Installing drives above one another 24
Frame R3 25
Installing the gasket (IP21 [UL Type 1]) 25
Installing the auxiliary fan (IP21 [UL Type 1]) 25

Installing the flange 27
Frames R6 and R8 32
Installation procedure 32

4 Dimension drawings

Contents of this chapter 39
Frame R3, IP21 (UL Type 1) 40
Attaching points and opening dimensions, frame R3 41
Frame R6, IP 21 (UL Type 1) 42
Hood 43
Attaching points and opening dimensions, frame R6 44
Frame R8, IP21 (UL Type 1) 45
Hood 46
Attaching points and opening dimensions, frame R8 47

Further information

1

Introduction to the supplement

Contents of this chapter

This chapter describes the supplement.

Applicability

This supplement applies to the following drives with flange mounting kits:

- ACS880-11 and ACS880-31
- ACH580-31 and ACQ580-31.

Target audience

This supplement is intended for people who plan the installation and install the drive with the flange mounting kit. Read the supplement before you work on the drive. You are expected to know the fundamentals of electricity, wiring, electrical components and electrical schematic symbols.

The supplement is written for readers worldwide. Both SI and imperial units are shown.

Purpose of the supplement

This supplement tells you how to install the drive mechanically onto an opening in a mounting plate with the flange mounting kit.

Related documents

You can find manuals and other product documents in PDF format on the Internet at www.abb.com/drives/documents.

The code below opens an online listing of the manuals applicable to this product.

ACS880-11 manuals

ACS880-31 manuals

ACH580-31 manuals

ACQ580-31 manuals

2

Hardware description

Contents of this chapter

This chapter describes the flange mounting kit.

Product overview

The flange mounting kit contains brackets for attaching the drive onto a mounting plate. The heatsink of the drive can be located in the cooling air channel, and the front part of the drive on the other side of the mounting plate.

Layout and mounting position

The flange-mounted drive is installed in a tilted or an upright position depending on the drive type.

Example: tilted position, frame R3

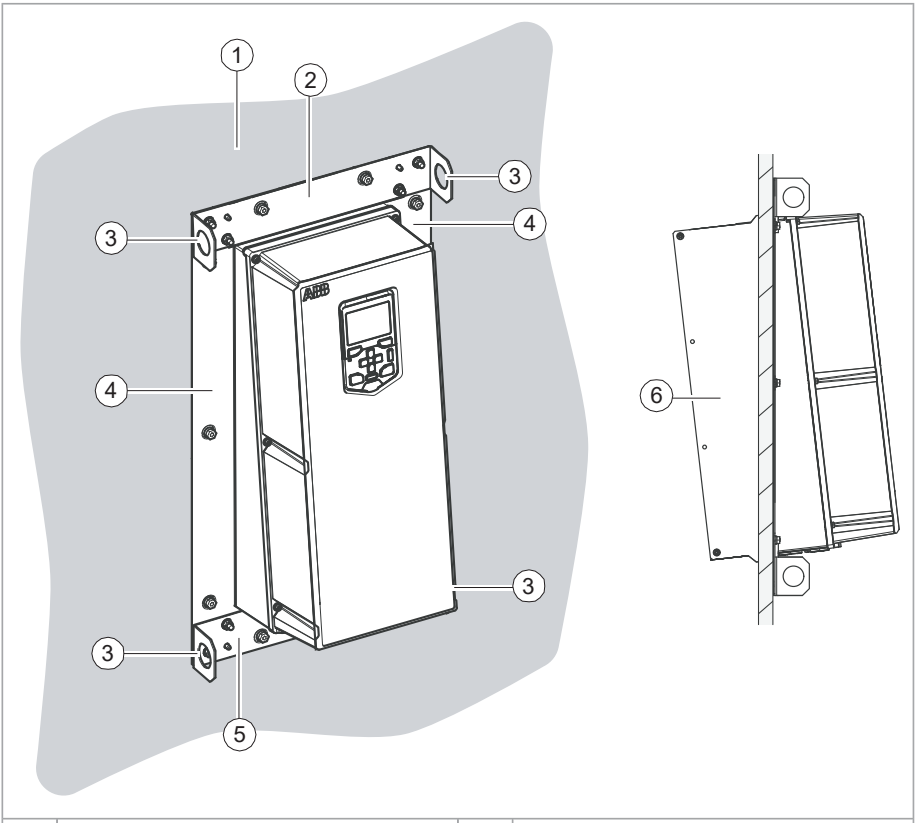

1	Mounting plate	4	Side flange bracket
2	Top flange bracket	5	Bottom flange bracket
3	Lifting hole	6	Drive heatsink in the cooling air channel

Example: upright position, frames R6 and R8

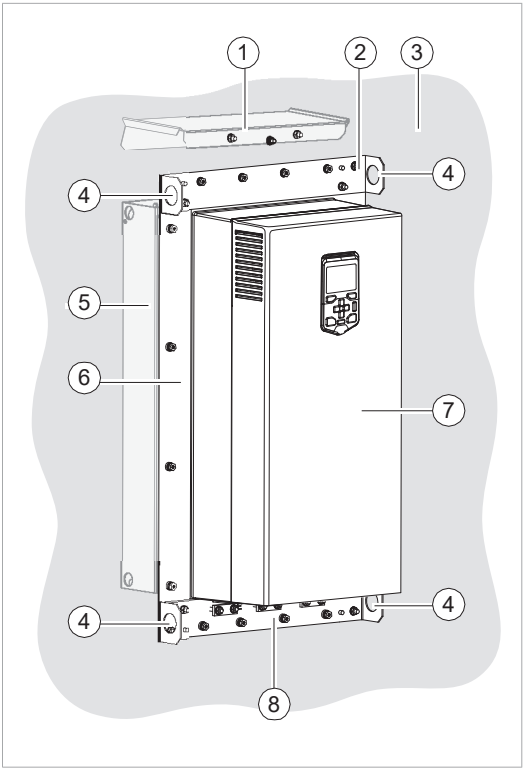

1 Hood (in the cooling air channel; required for UL Type 12)

2 Top flange bracket

3 Mounting plate

4 Lifting hole

5 Drive heatsink in the cooling air channel

6 Side flange bracket

7 Drive front side

8 Bottom flange bracket

Degree of protection

Degree of protection of the drive	Degree of protection in flange mounting	
	Front	Back
IP21 (UL Type 1) without cover	IP20 (UL Open Type)	IP55 (UL Type 12)
IP21 (UL Type 1)	IP21 (UL Type 1)	IP55 (UL Type 12)
IP55 (UL Type 12)	IP55 (UL Type 12)	IP55 (UL Type 12)

Front views of ACS880-11 and ACS80-31 frame R6 are shown below.

IP20
UL Open Type

IP21
UL Type 1

IP55
UL Type 12

Front view of ACH580-31 frame R6 is shown below.

IP20
UL Open Type

IP21
UL Type 1

IP55
UL Type 12

Front view of ACQ580-31 frame R6 is shown below

IP20
UL Type Open

IP21
UL Type 1

IP55
UL Type 12

Special requirements

For frame sizes R6 and R8, you must install

- gasket into the drive
- hood in UL Type 12 installations.

For frame size R3, you must install

- gasket into the drive
- auxiliary fan for UL Type 1 installations.

Ordering codes

The flange mounting kit is a plus code option (+C135) or can be ordered separately with these ordering codes.

Frame size	Ordering
R3	3AXD50000685974
R6	3AXD50000179633
R8	3AXD50000877966

3

Mechanical installation

Contents of this chapter

This chapter generally describes how to mechanically install the drive with the flange mounting kit.

Safety instructions

Obey the general safety instructions in the hardware manual and the task-specific instructions in this supplement.

Wear protective gloves and long sleeves. Some parts have sharp edges.

WARNING!
For frame sizes R6 and R8: Use the lifting eyes of the drive when you lift the drive. Do not tilt the drive. The drive is heavy and its center of gravity is high. An overturning drive can cause physical injury.

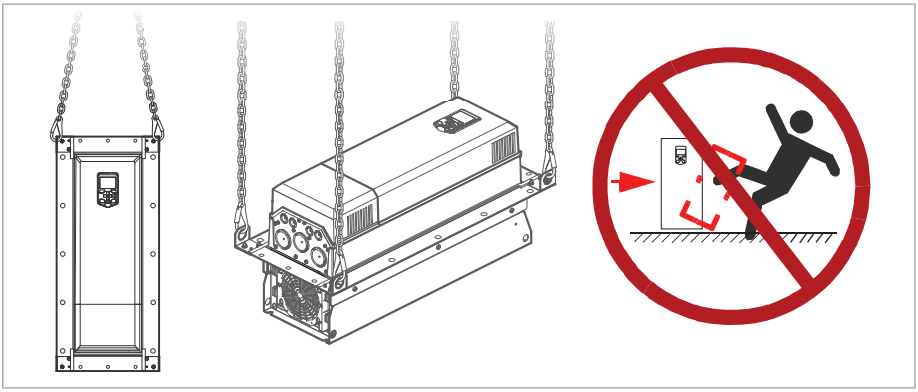

Examining the installation site

Make sure that the installation site complies with these requirements:

- The installation site has sufficient ventilation to prevent overheating of the drive. See section Losses, cooling data and noise in the hardware manual for the required air flow in the cooling air channel and in the front part of the drive.
- The operation conditions of the drive agree with the specifications in section Ambient conditions in the hardware manual.
- The mounting plate is vertical, non-flammable and strong enough to hold the weight of the drive.
- The material behind, above and below the drive is non-flammable.
- There is enough free space above and below the drive for cooling air flow, service and maintenance. There is enough free space in front of the drive for operation, service and maintenance. See section Free space requirements in this supplement and section Dimensions, weights and free space requirements in the hardware manual.
- When you install drives above one another, make sure that the outlet cooling air flows away from the drive above in the cooling air channel.

Additional requirements for cabinet installations

Make sure that the cooling air gratings of the drive will not be covered. Make sure that the required cooling air flow is achieved. In a totally closed cabinet with no forced ventilation, a fan for circulating the air inside the cabinet may be needed.

For UL installations, plan the wire bending radius of input power and motor cables according to UL rules.

Necessary tools

To move a heavy drive, you need a crane, fork-lift or pallet truck (check load capacity!).

To lift a heavy drive, you need a hoist.

To install the drive mechanically, you need the following tools:

- drill with suitable bits
- screwdriver set (Torx, flat and/or Phillips, as appropriate)
- torque wrench
- socket set, Hex key set (metric)

Moving the drive

Move the drive in its transport package to the installation site. Use a pallet truck when you move a heavy drive package.

Unpacking and examining the delivery

Transport package contents

The flange mounting kit package is tied with straps onto the drive package (frame R3), packed under the cardboard cover (frames R6 and R8), or sent separately. Make sure that all items are present and there are no signs of damage. Read the data on the type designation label of the drive to make sure that the drive is of the correct type.

Frame R3

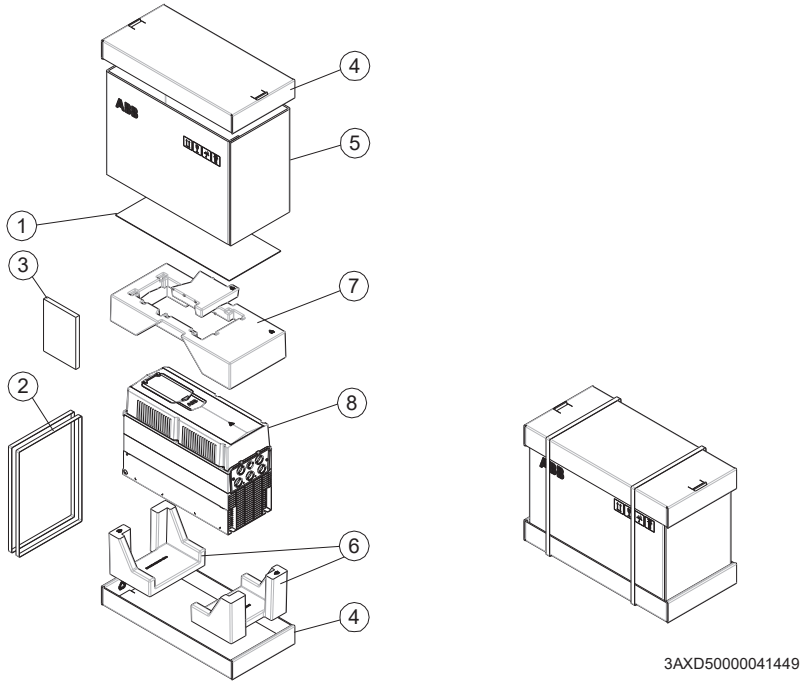

Item	Description	Item	Description
1	Mounting template	5	Cardboard sleeve
2	PET straps	6	Package cushion
3	Printed quick guides and manuals, multilingual residual voltage warning sticker	7	Foam cushion
4	Cardboard tray	8	Drive with factory installed options

To unpack:

- Cut the straps (2).
- Remove the tray (4) and sleeve (5).
- Remove the cover protecting film.
- Lift the drive (8).

Frames R6 and R8

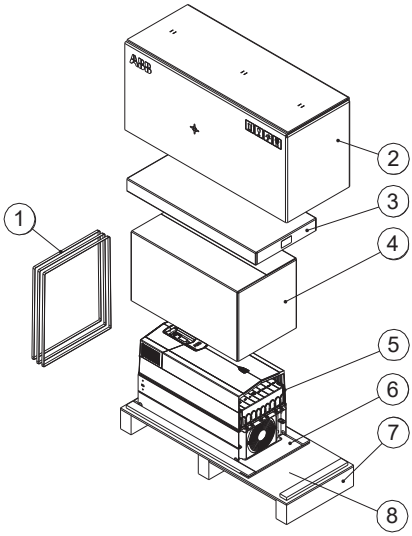

Item	Description	Item	Description
1	Straps	5	Drive with factory installed options
2	Cardboard cover	6	Pallet stopper
3	Flange mounting kit	7	Pallet tray
4	Cardboard sleeve	8	Printed quick guides and manuals, multilingual residual voltage warning sticker

To unpack:

- Cut the straps (1).
- Remove the cardboard cover (2).
- Lift the flange mounting kit (3).
- Remove the cardboard sleeve (4).
- Attach lifting hooks to the lifting eyes of the drive (5). Lift the drive with a lifting device.

Flange mounting kit package contents

The illustrations below show the contents of the flange mounting kit packages. Make sure that all items are present and that there are no signs of damage.

Frame R3

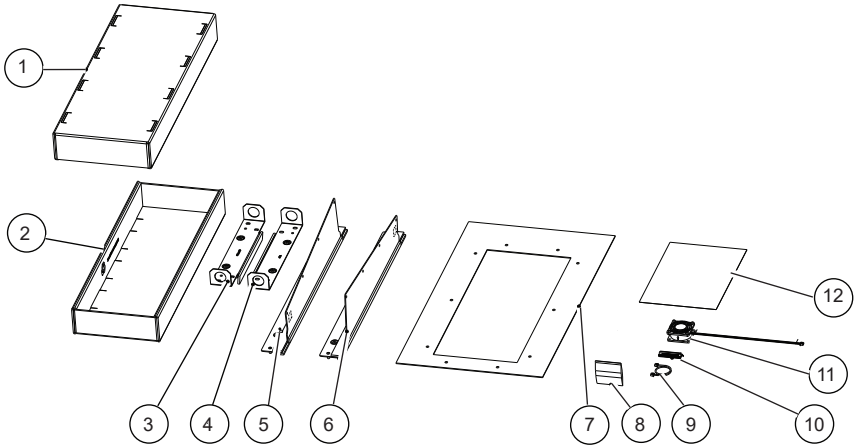

Item	Description	Item	Description
1	Top cardboard cover	7	Mounting template
2	Cardboard tray	8	Screw package: • M5x12 combi screw (4 pcs) • M6 nut (8 pcs) • M6x25 combi screw T25 (10 pcs)*
3	Top bracket	9	Fan wire
4	Bottom bracket	10	Gasket
5	Left side bracket	11	Fan
6	Right side bracket	12	Quick installation guide

* The delivery does not include the Rivet or Kalei nuts for the M6 screws.

Frames R6 and R8

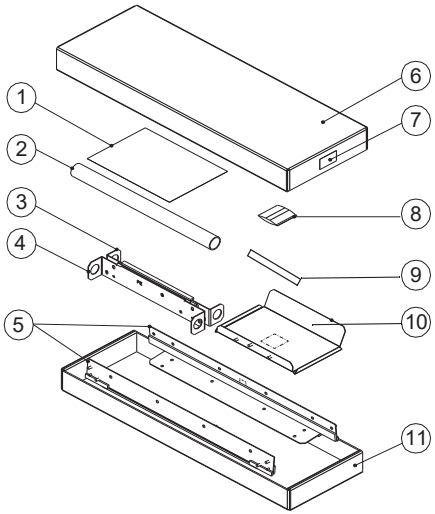

Item	Description	Item	Description
1	Quick installation guide	8	Screw package: • M6 nut (11 pcs) • M6×10 T30 (12 pcs) * • M6×25 T25 (R6…R8: 16 pcs)
2	Mounting template		
3	Top bracket		
4	Bottom bracket		
5	Side brackets		
6	Top cardboard cover	9	Gasket
7	Option kit package label	10	Hood (required for UL type 12)
		11	Cardboard tray

* The delivery does not include the Rivet or Kalei nuts for the M6 screws.

Mounting template

The flange mounting kit package includes a template in actual size for drilling the attaching holes and cutting the hole in the mounting plate.

An example template is shown below.

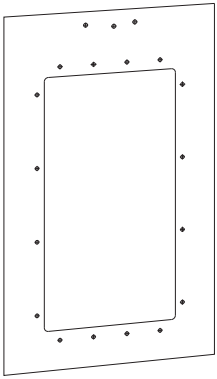

Installing the drive

Free space requirements

The flange-mounted drives can be installed side by side. The free space requirements above and below the drives are shown below.

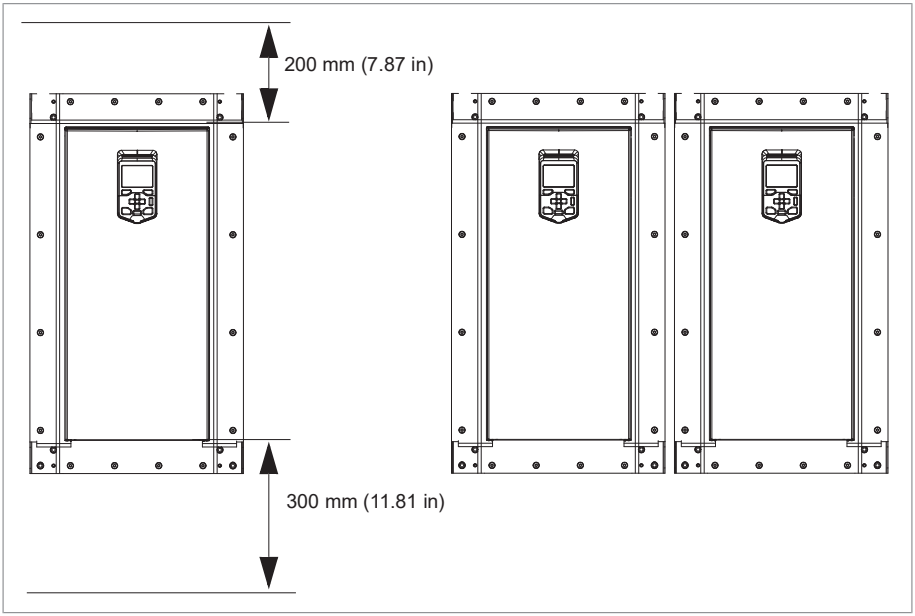

Installing drives above one another

Make sure that the outlet cooling air flows away from the drive above.

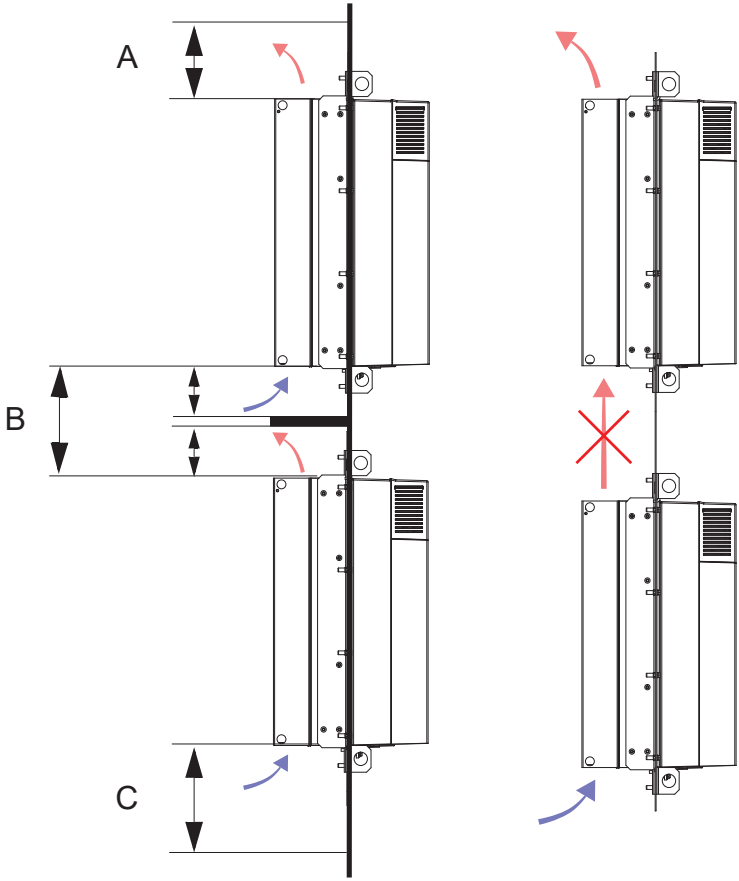

Frame	A		B		C	
	mm	in	mm	in	mm	in
R3 … R8	200	7.87	250	9.84	300	11.81

Frame R3

Installing the gasket (IP21 [UL Type 1])

1. Turn the screwdriver clockwise to remove the main fan assembly.
2. Place the gasket inside the drive.
3. Install the main fan assembly back to the drive.

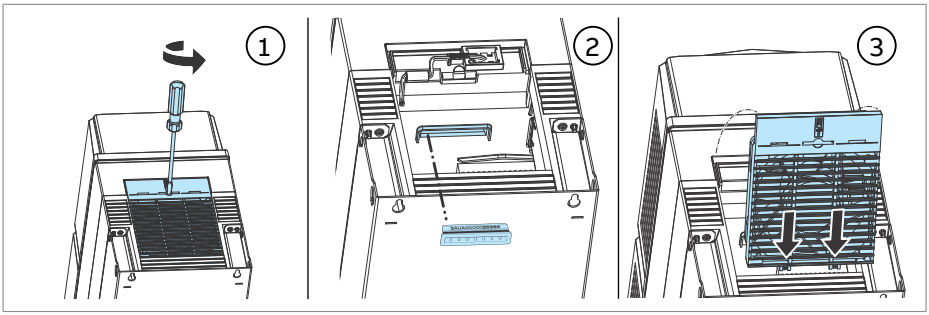

Installing the auxiliary fan (IP21 [UL Type 1])

1. Loosen the two screws on the bottom of the front cover and lift the front cover off.

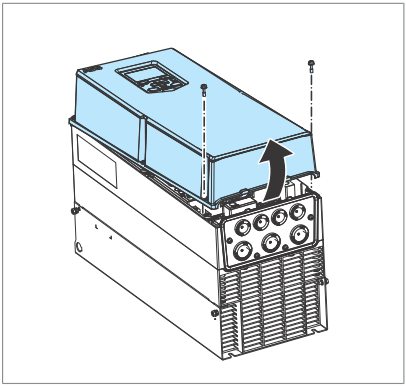

2. Cut off the four retaining clips to remove the IP21 finger guard from the fan slot.

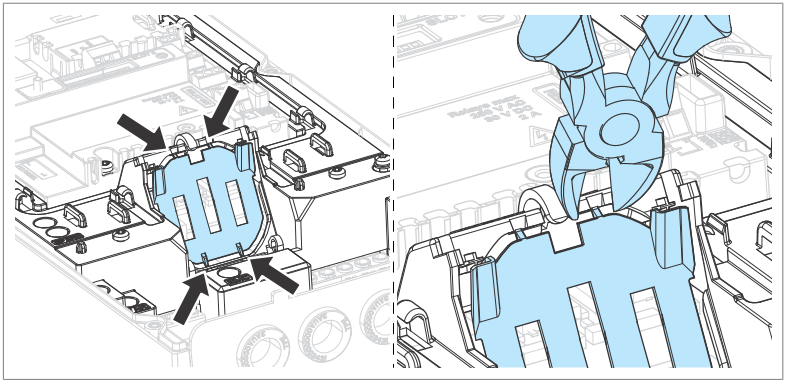

3. Install the fan to the slot. Make sure the blowing direction is outwards. The power supply wire should start from the upper right-hand corner of the fan.
4. Route the power supply wire to FAN2 connector. Twist the wire if it is too long.
   ACH580, ACQ580 and ACS580: the FAN2 connector is located on the left side of the control unit.
   ACS880: the FAN2 connector is located on the top right corner of the control unit.

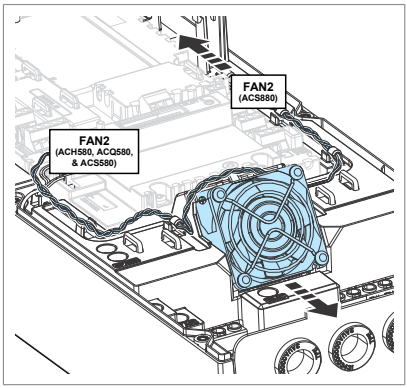

5. Reinstall the cover. Tighten the screws at the bottom of the cover to 2 N·m (1.5 lb·ft).

Installing the flange

1. Attach the side brackets (a and b) of the flange to the drive with M5 combi screws

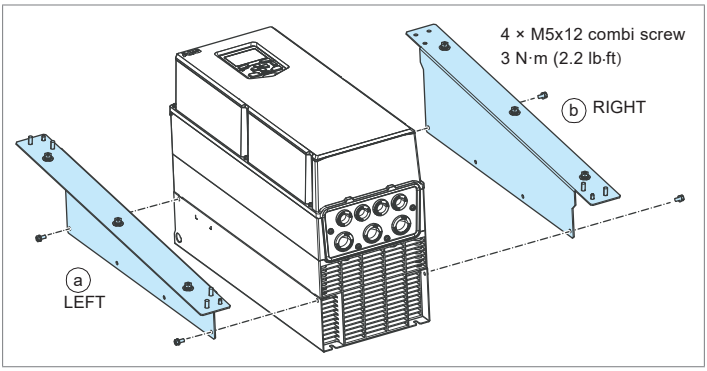

2. Attach the top (c) and bottom (d) brackets to the side brackets, first the inner sides of the top and bottom brackets (the sides that touch the drive), then the outer sides.

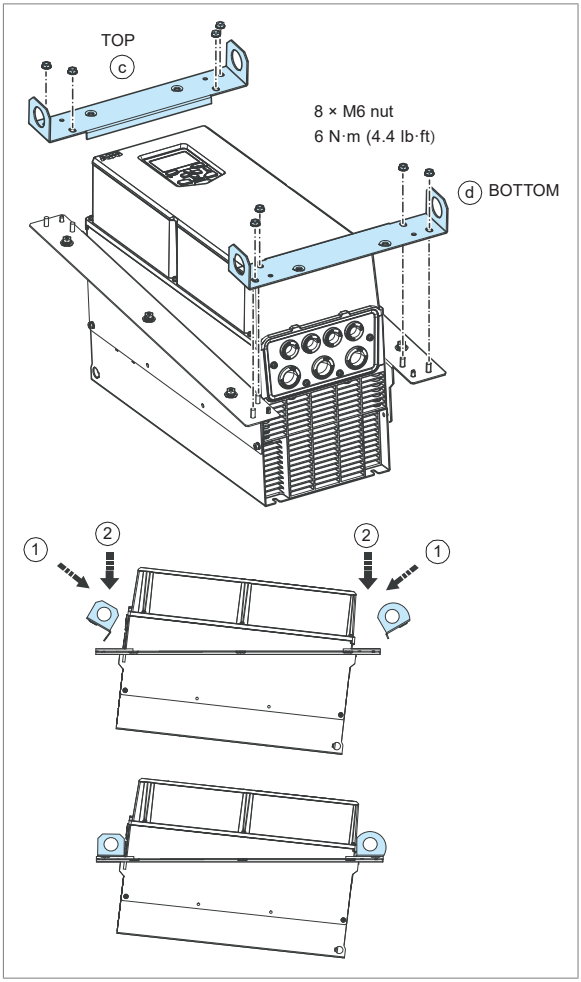

3. See chapter Dimension drawings for the dimensions of the flange and the required opening in the mounting plate. Attach the mounting template from the flange mounting kit package onto the mounting plate.

   Make the opening and drill the holes for the mounting screws. Consider the hole size for the Rivet or Kalei nuts (not included in the delivery). Remove the mounting template.

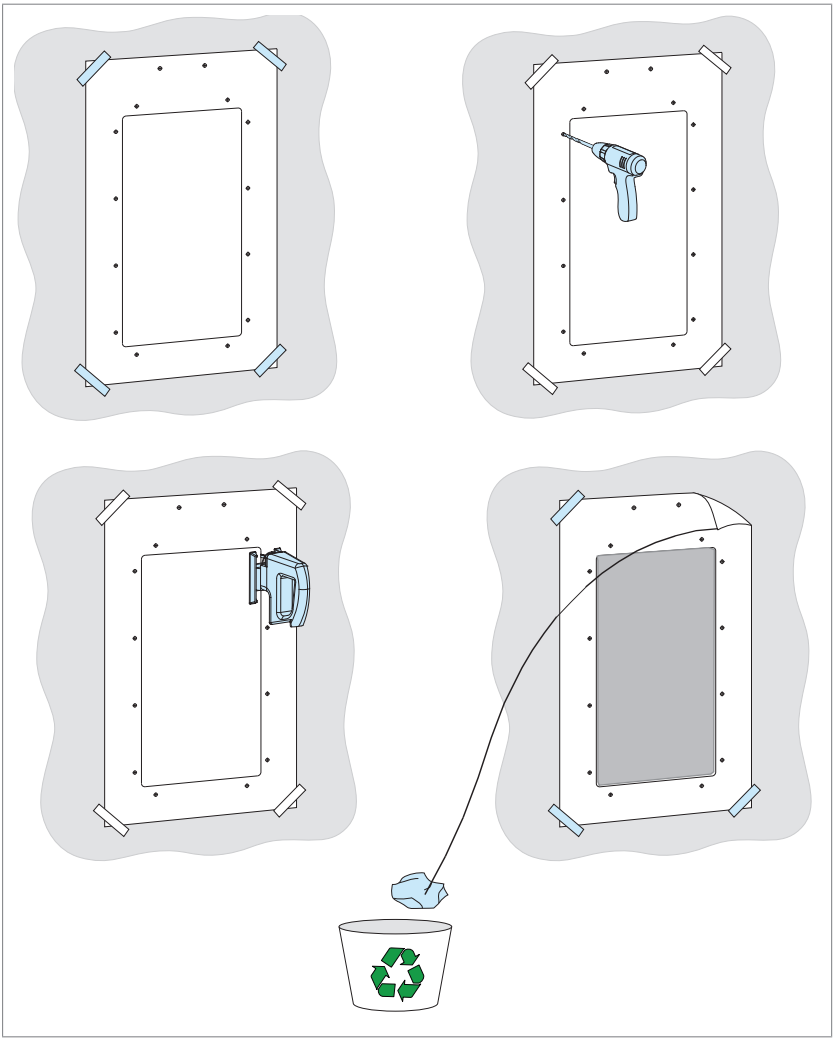

4. Attach chains to the drive lifting holes and lift the drive with a lifting device onto the opening in the mounting plate.

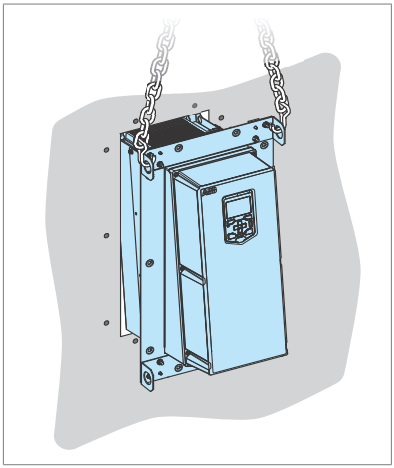

5. Attach the bottom bracket with one screw.

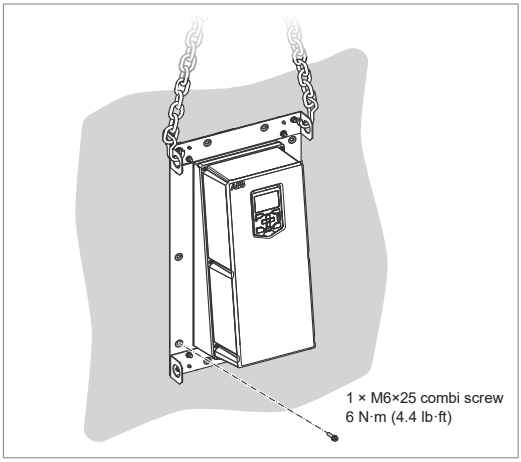

6. Attach the top bracket with one screw.

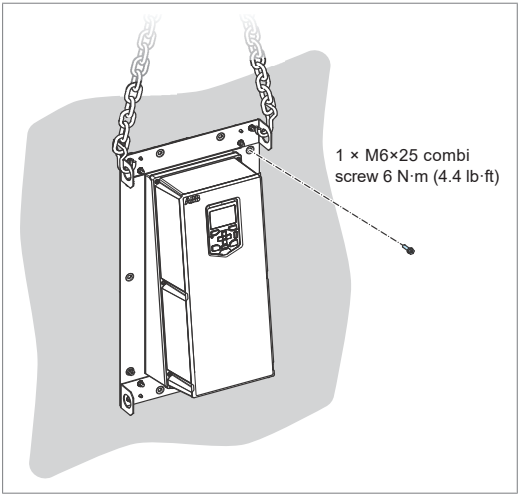

7. Attach the rest of the mounting screws. Remove the chains.

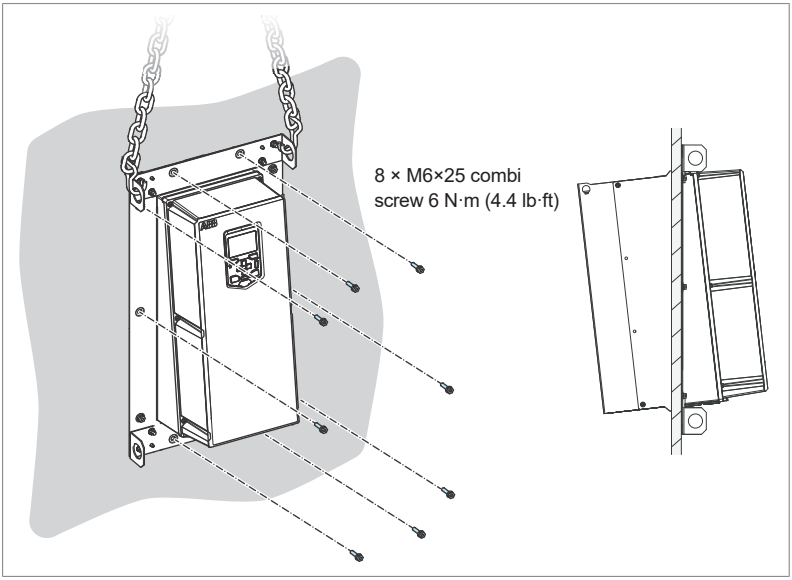

Frames R6 and R8

Installation procedure

1. Attach the gasket (a).

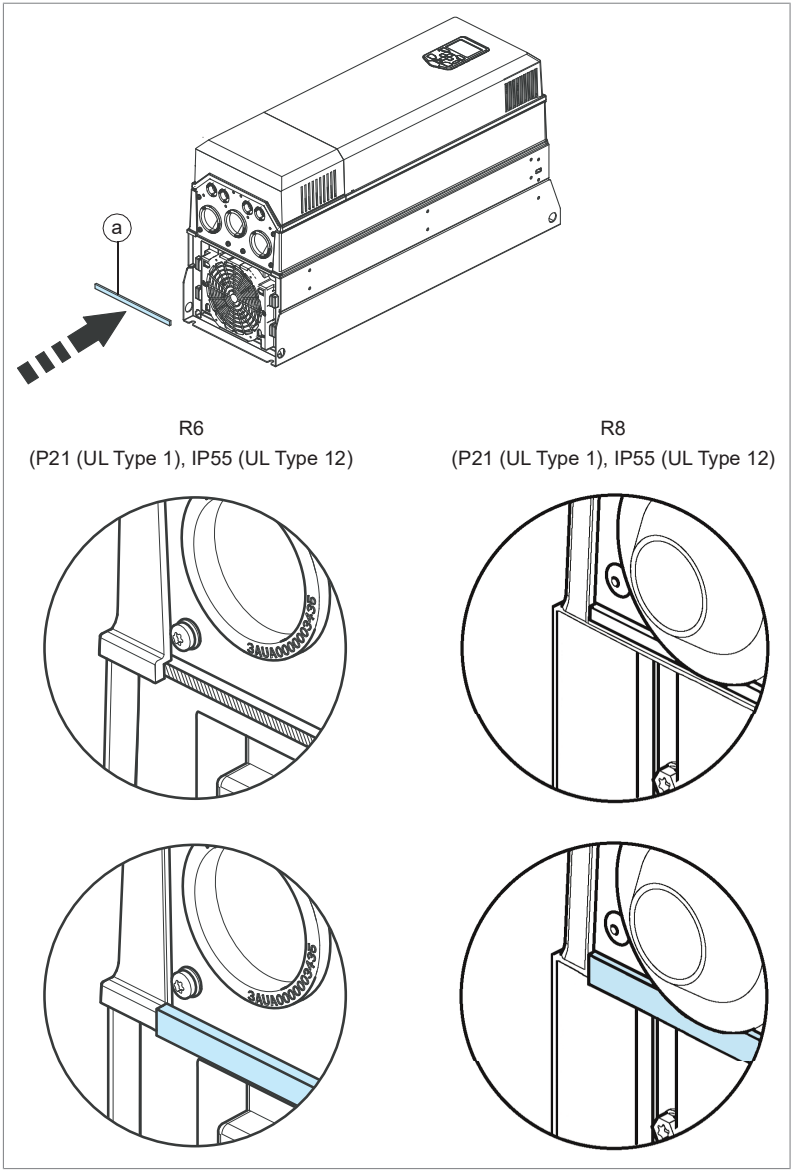

2. **IP20 (UL Open Type):** Install the sealing screws.

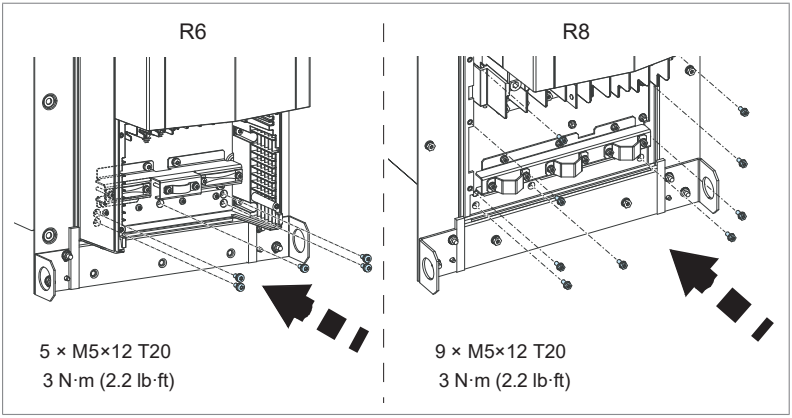

3. Attach the side brackets (b).

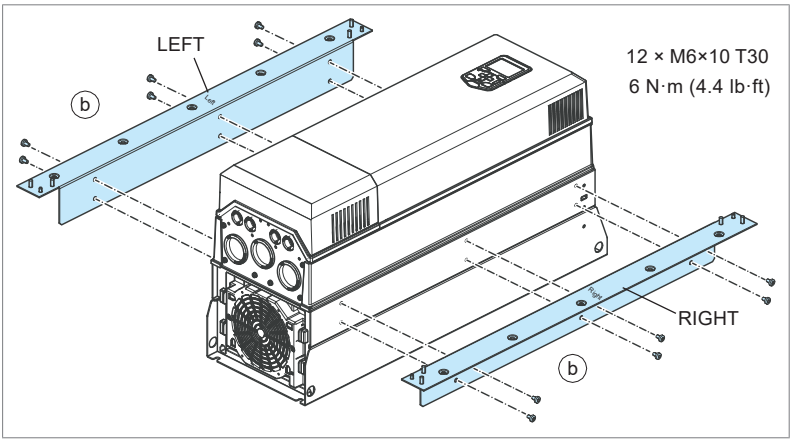

4. Attach the top (c) and bottom (d) brackets to the side brackets, first the inner side (1, the side that touches the drive), then the outer side (2).

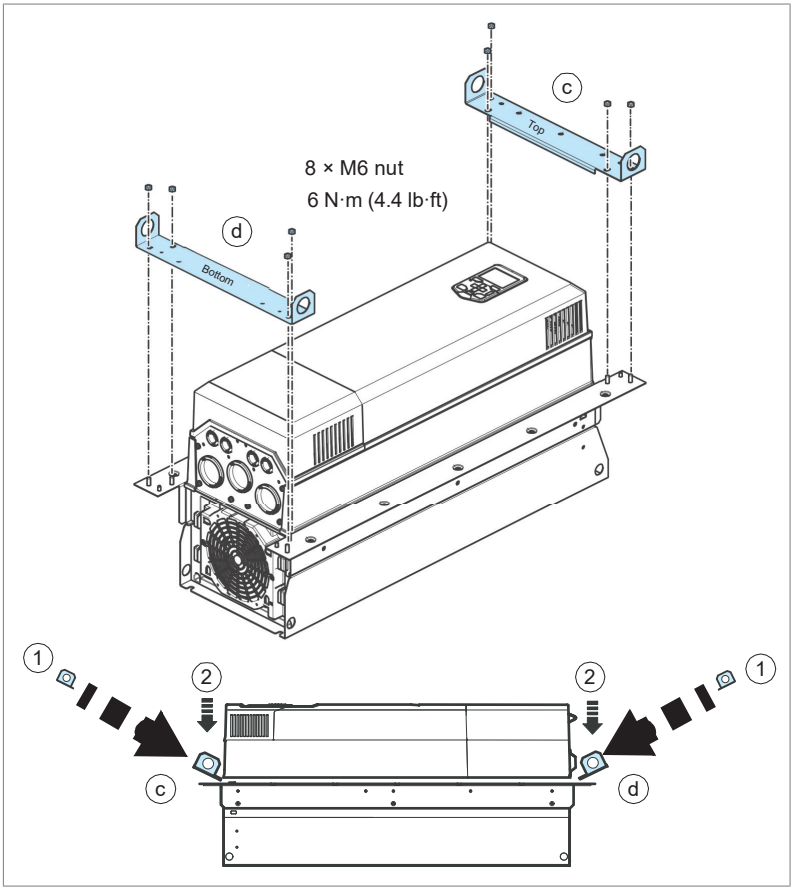

5. See chapter Dimension drawings for the dimensions of the flange and the required opening in the mounting plate. Attach the mounting template from the flange mounting kit package onto the mounting plate.

   Make the opening and drill the holes for the mounting screws. Consider the hole size for the Rivet or Kalei nuts (not included in the delivery). Remove the mounting template.

   The three holes on top of the mounting plate are only needed for the hood in UL Type 12 installations.

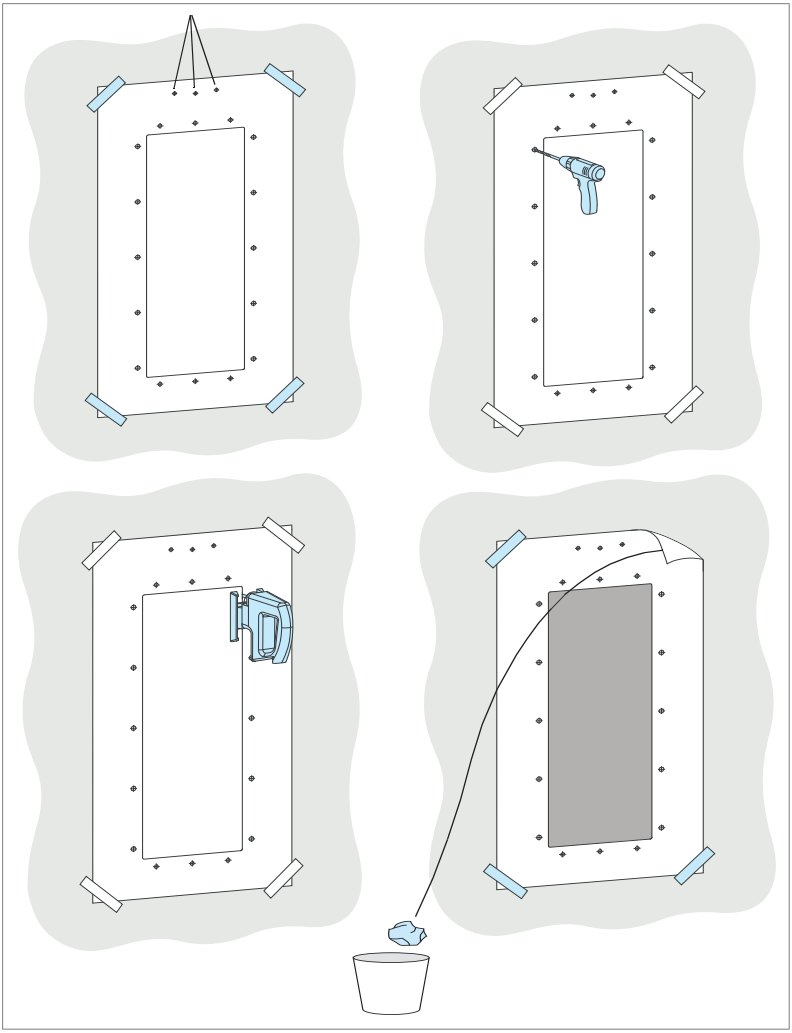

6. **UL Type 12 installation only:** Attach the hood to the cooling channel.

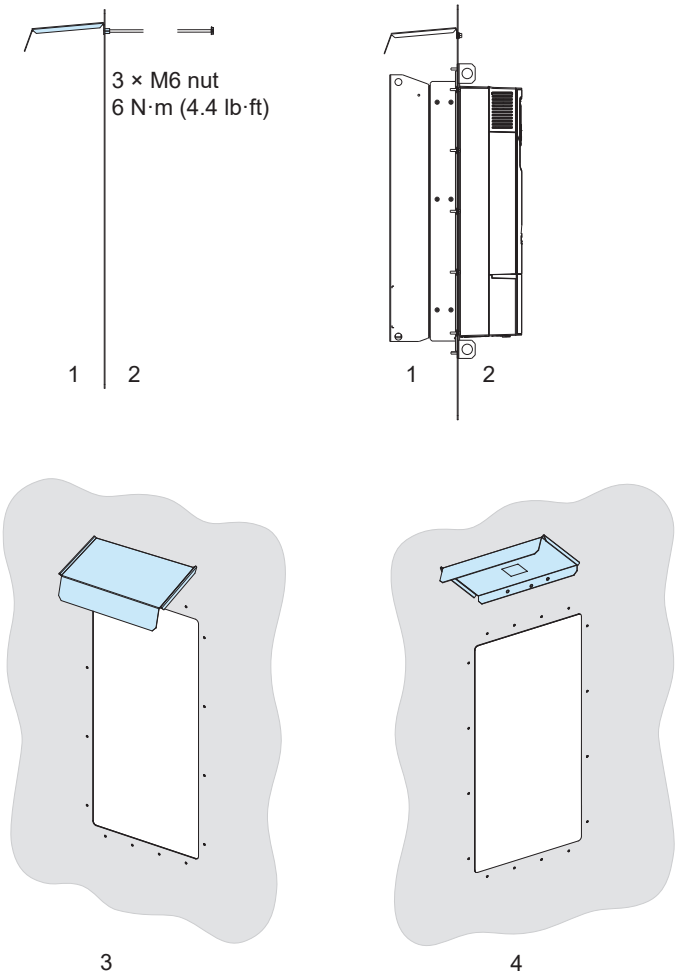

1	Back
2	Front
3	Back: View from top
4	Back: View from bottom

7. Attach chains to the lifting holes of the flange and lift the drive with a lifting device onto the opening in the mounting plate.

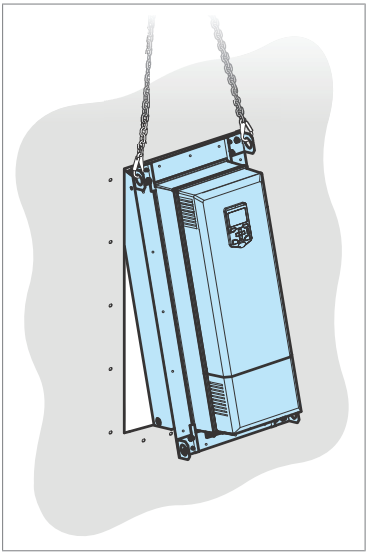

8. Attach the bottom bracket with one screw.

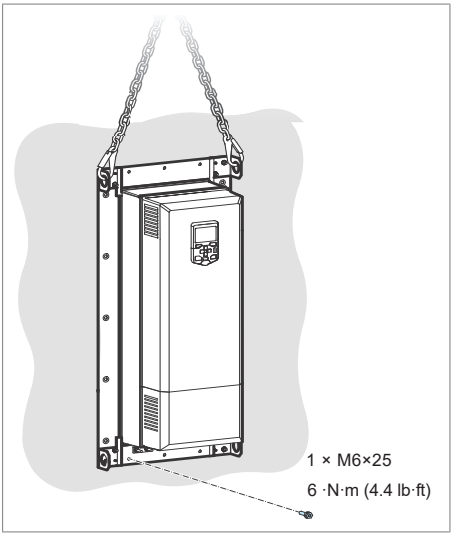

9. Attach the top bracket with one screw.

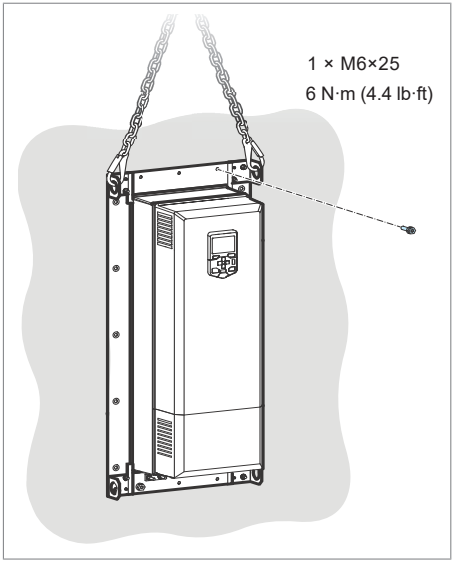

10. Attach the rest of the mounting screws. Remove the chains.

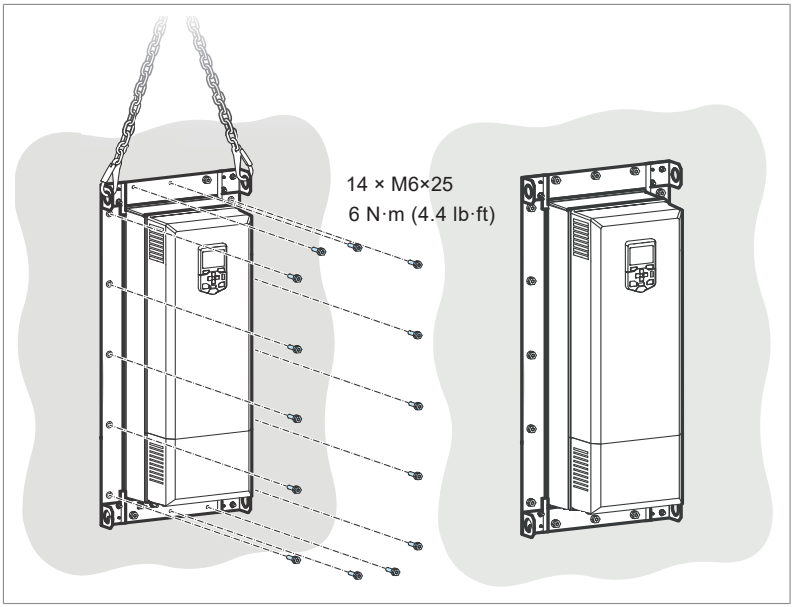

4

Dimension drawings

Contents of this chapter

This chapter contains the dimension drawings of the flange mounting kits and required openings in the mounting plate.

Frame R3, IP21 (UL Type 1)

The main dimensions of the flange are shown below. They are the same for ACS880-11, ACS880-31, ACH580-31 and ACQ580-31. For the dimensions of the drive, see the hardware manual.

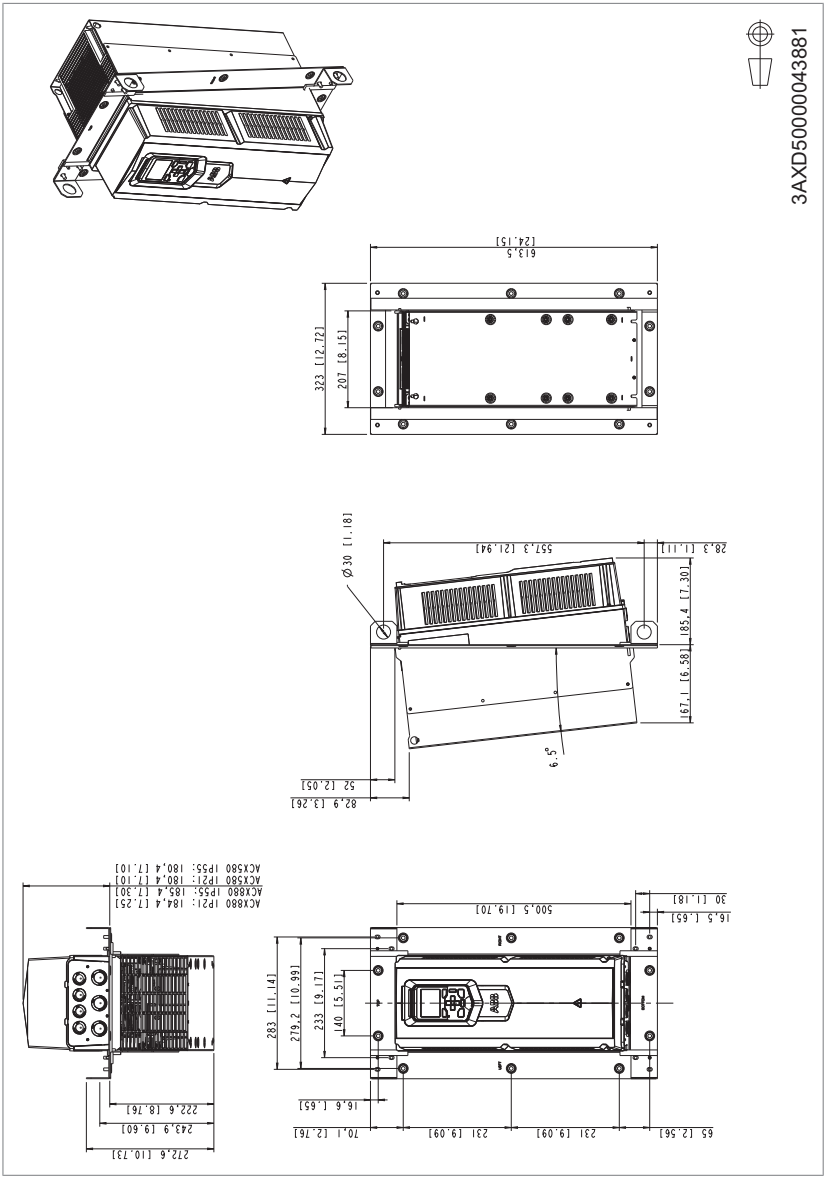

Attaching points and opening dimensions, frame R3

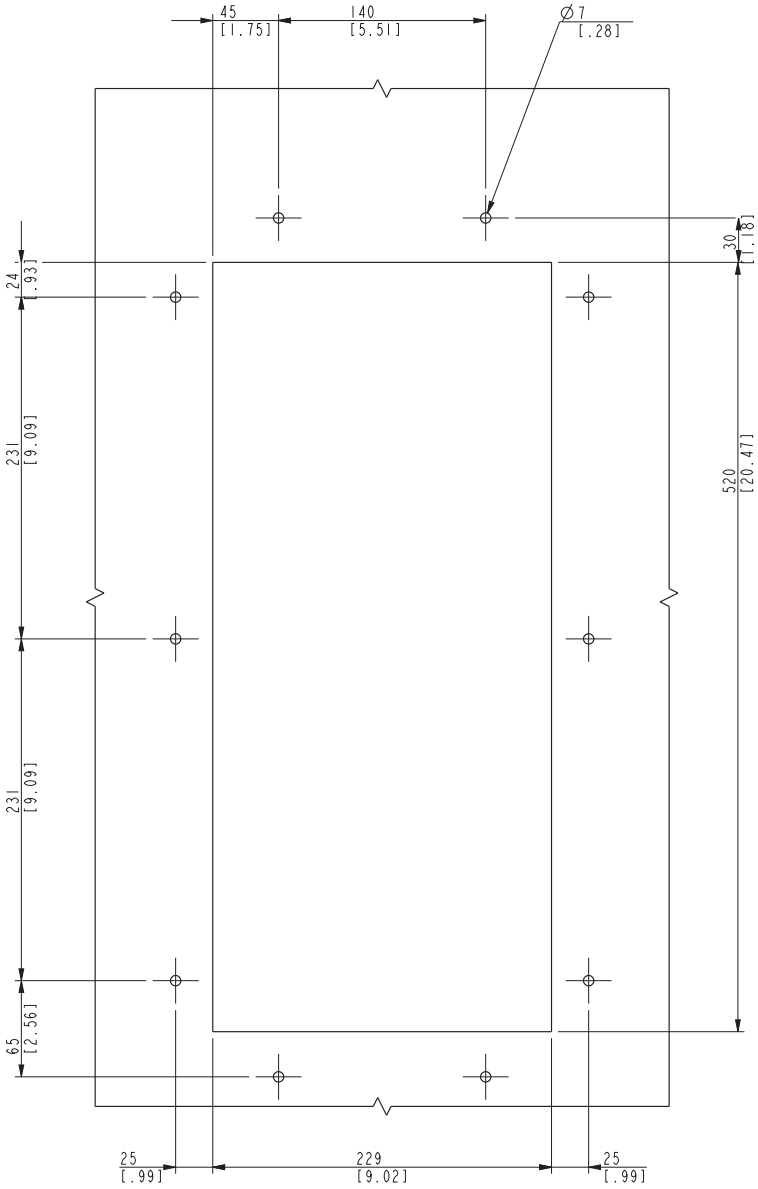

3AXD50000043907

Frame R6, IP 21 (UL Type 1)

The main dimensions of the flange are shown below. They are the same for ACS880-11, ACS880-31, ACH580-31 and ACQ580-31. For the dimensions of the drive, see the hardware manual.

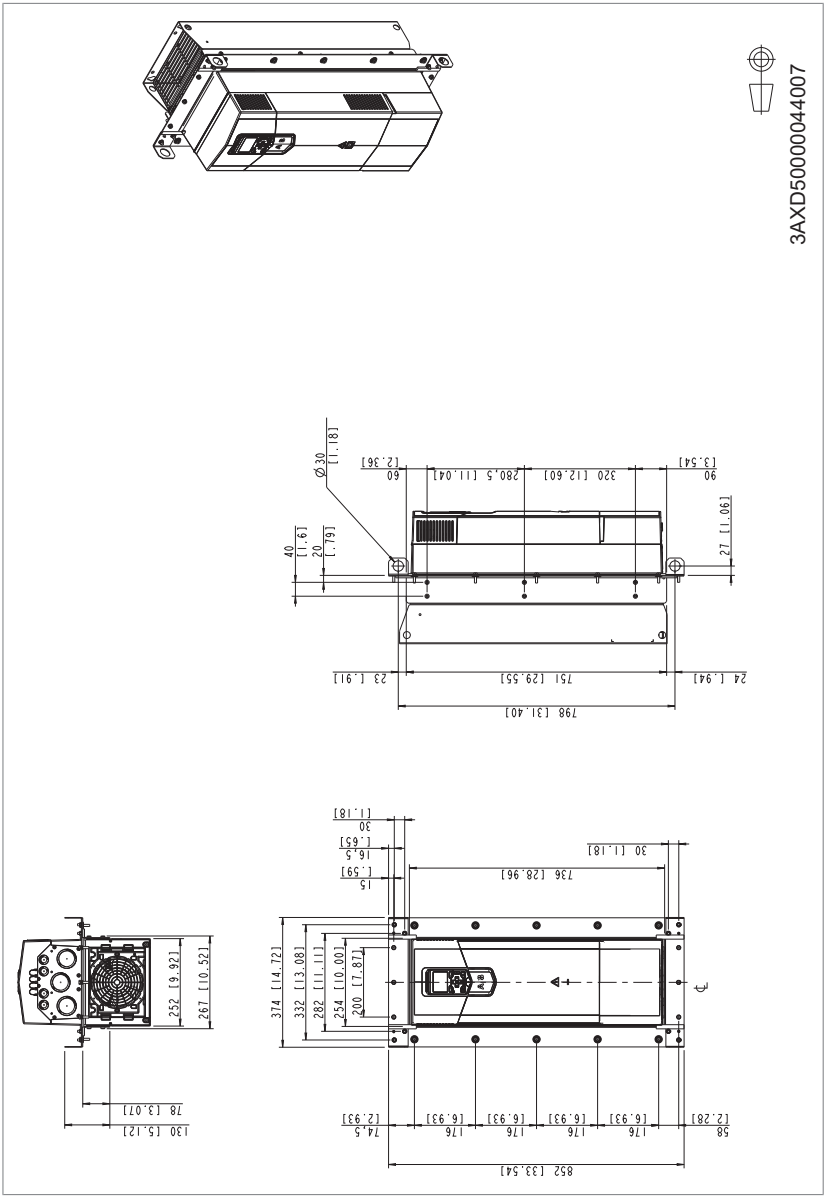

Hood

UL Type 12 installation requires installing the hood at the back of the drive. Not needed in IP55.

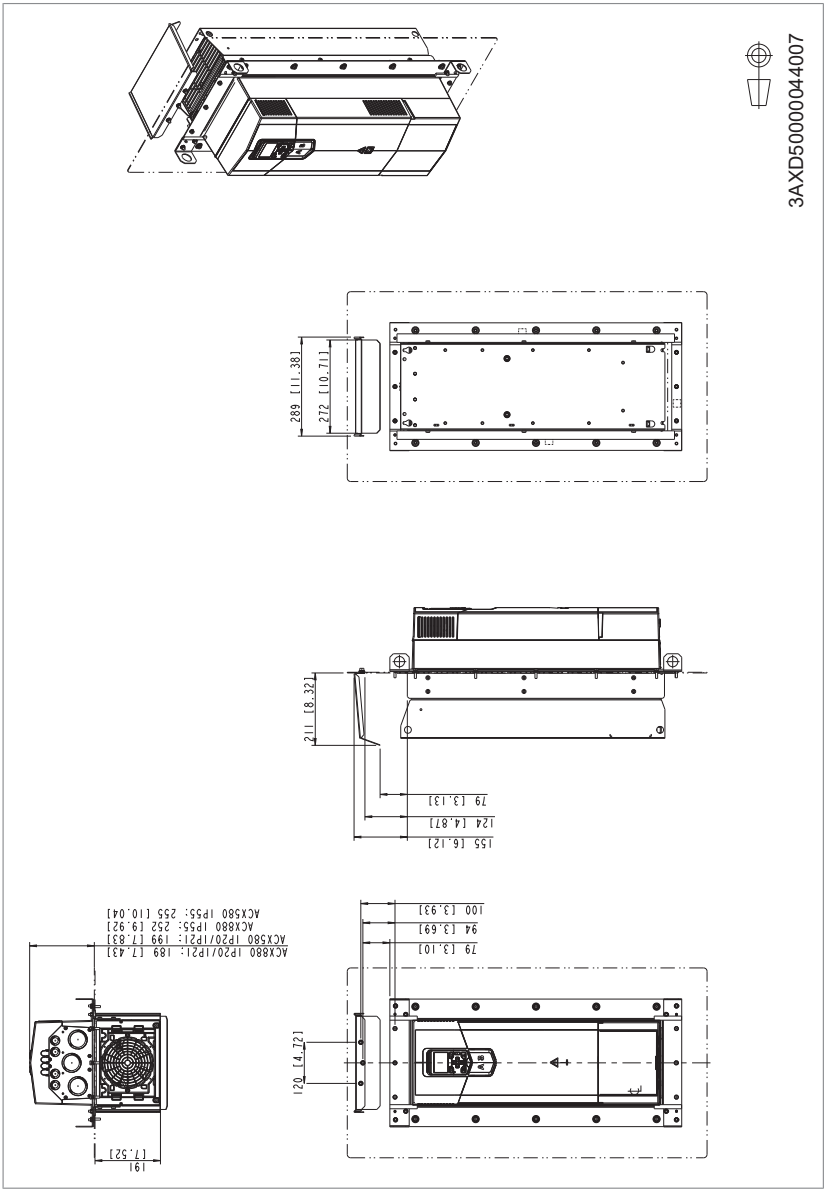

Attaching points and opening dimensions, frame R6

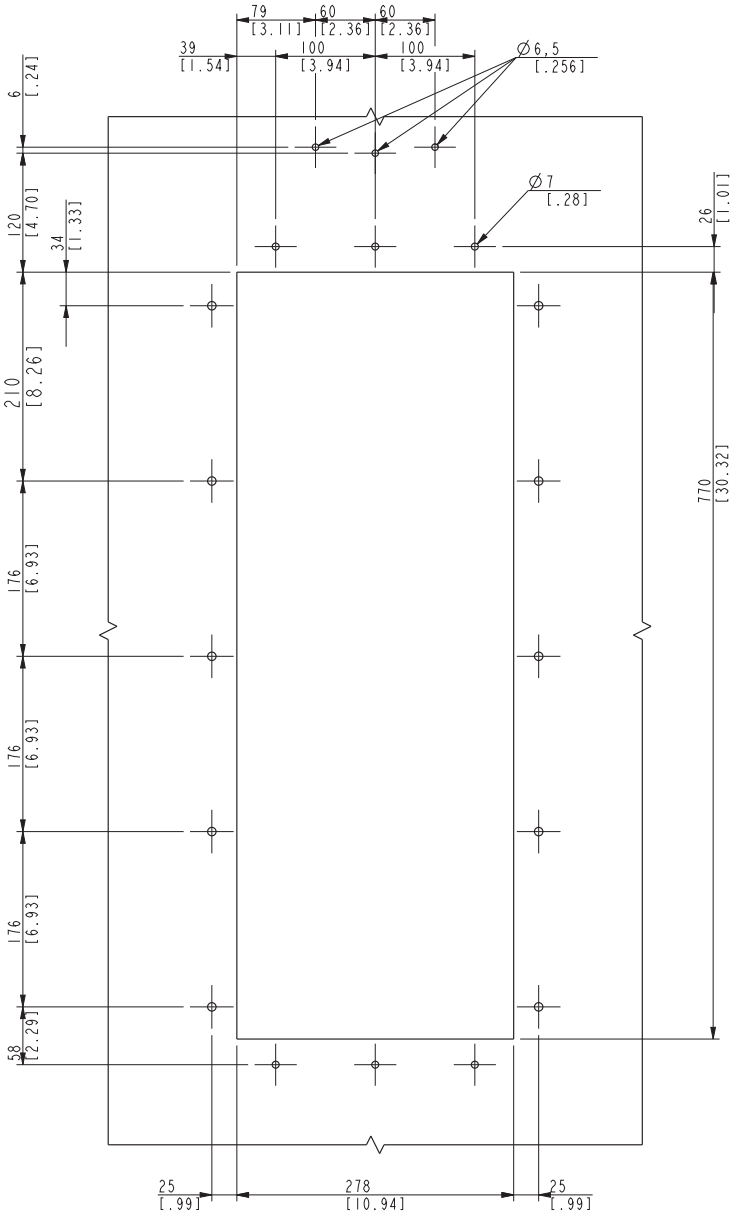

3AXD50000043981

Frame R8, IP21 (UL Type 1)

The main dimensions of the flange are shown below. They are the same for ACS880-11, ACS880-31, ACH580-31 and ACQ580-31. For the dimensions of the drive, see the hardware manual.

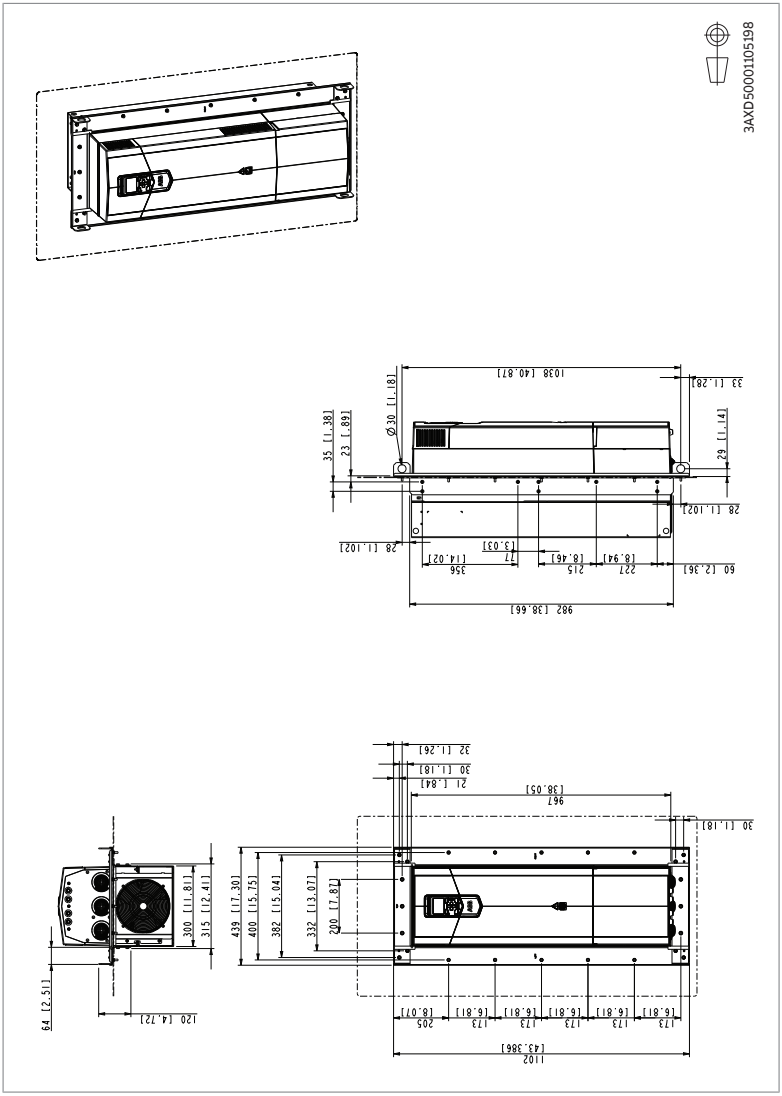

Hood

UL Type 12 installation requires installing the hood at the back of the drive. Not needed in IP55.

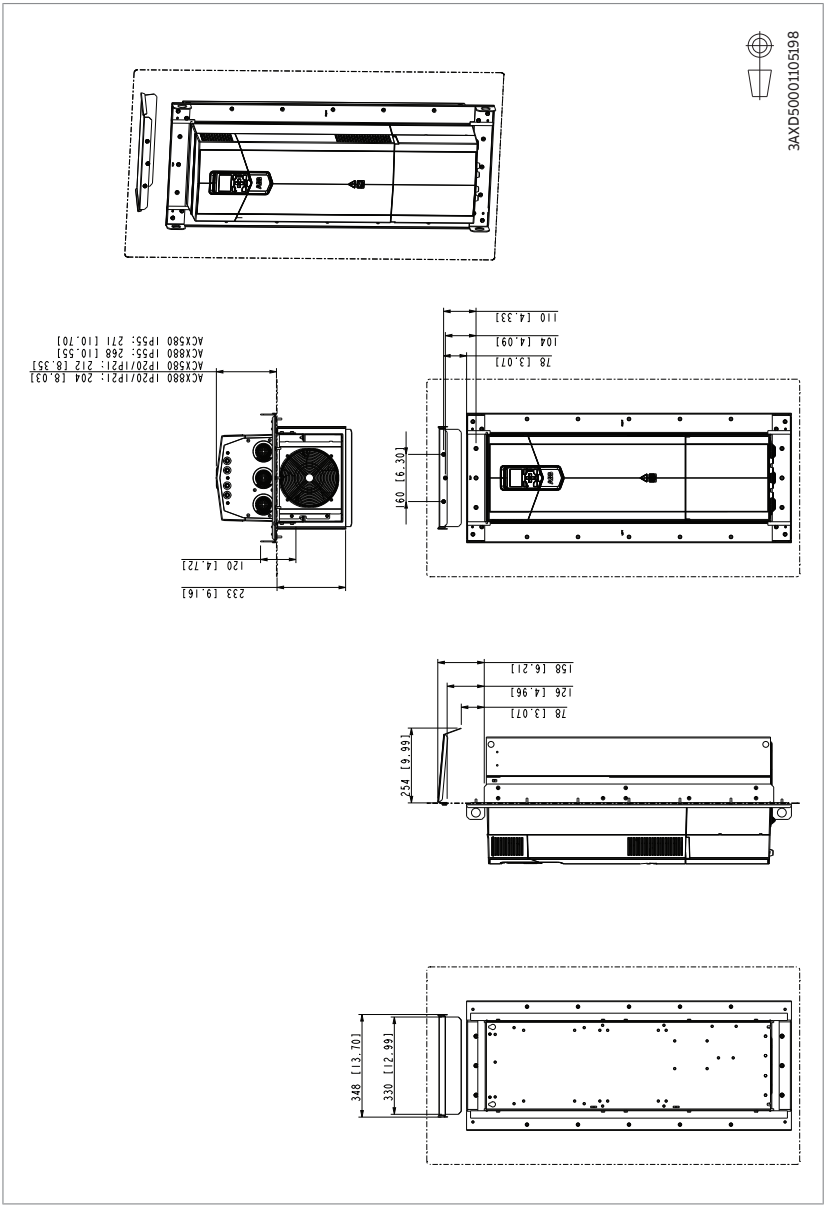

Attaching points and opening dimensions, frame R8

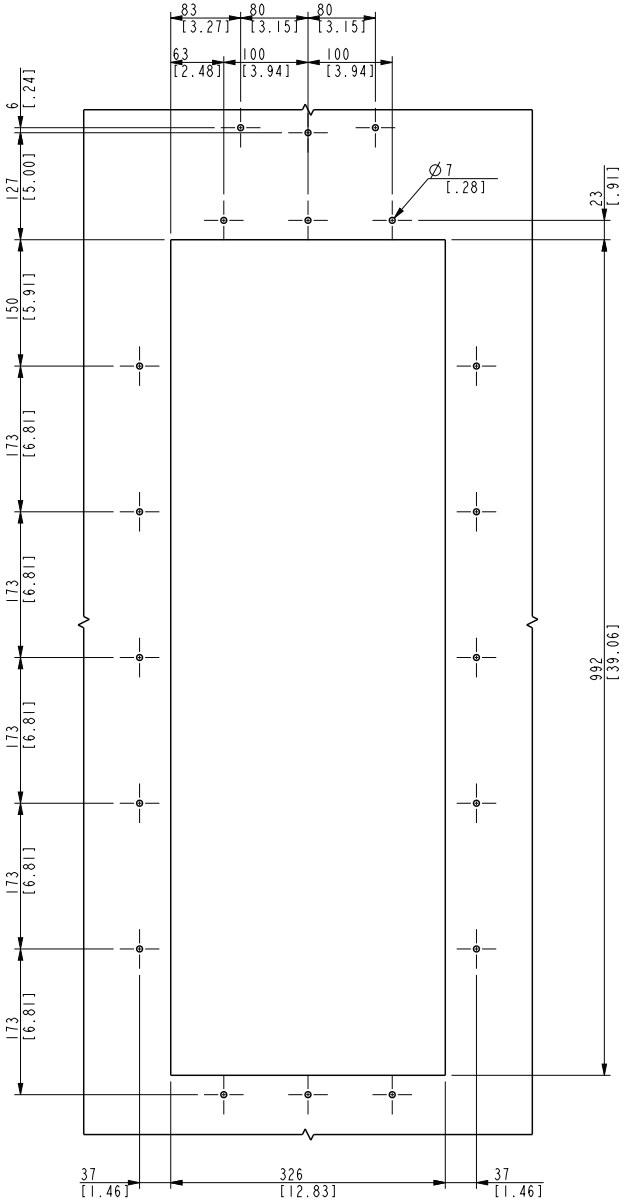

3AXD50000044106

Further information

Product and service inquiries

Address any inquiries about the product to your local ABB representative, quoting the type designation and serial number of the unit in question. A listing of ABB sales, support and service contacts can be found by navigating to www.abb.com/searchchannels.

Product training

For information on ABB product training, navigate to new.abb.com/service/training.

Providing feedback on ABB manuals

Your comments on our manuals are welcome. Navigate to new.abb.com/drives/manuals-feedback-form.

Document library on the Internet

You can find manuals and other product documents in PDF format on the Internet at www.abb.com/drives/documents.

a3 (frozen)
PDF-A5
Created 2023-10-24, 12:11:46

www.abb.com/drives

3AXD50000349838C

© Copyright 2023 ABB. All rights reserved.
Specifications subject to change without notice.

3AXD50000349838 Rev C (EN)
2023-10-24