ABB INDUSTRIAL DRIVES

ACS880-204LC IGBT supply modules

Hardware manual

ACS880-204LC IGBT supply modules

Hardware manual

Table of contents

5. Electrical installation

8. Start-up

3AXD50000284436 Rev E
EN
Original instructions
EFFECTIVE: 2024-01-05

Table of contents

1 Introduction to the manual

Contents of this chapter 15
Applicability 15
Safety instructions 15
Target audience 15
Categorization by frame size and option code 16
Use of component designations 16
Terms and abbreviations 16
Related documents 17

2 Operation principle and hardware description

Contents of this chapter 19
Operation principle 19
Simplified main circuit diagram 20
Charging 20
Overview diagram of the drive system 21
Cooling system 21
Single-line circuit diagrams of the supply unit 21
Frame 1×R7i 22
Frame 4×R7i 23
Frame 1×R8i 24
Frame R8i multiples 25
IGBT supply module hardware 26
Frame R7i hardware 26
Module layout 26
Coolant connectors 27
Installation frame 27
Connectors X50, X52 and X53; Auxiliary voltage selector X59 27
Fiber optic connectors 28
LEDs 29
Frame R8i hardware 29
Module layout 30
Coolant connectors 30
Connectors X50…X59 31
Fiber optic connectors 32
LEDs 32
Control interfaces 33
Overview of the control connections of the BCU control unit 34
Overview of the control connections of the UCU control unit 35
Supply unit control devices 36
Main disconnecting device 36
Auxiliary voltage switch 36
Operating switch 36
Emergency stop and emergency stop reset buttons 36
Control panel [A59] 37
Line-up charging switch 37

Local charging control switch 37
DC switch-disconnector 37
Charging switch for unit charging 38
DC switch-disconnector for line-up charging 38
PC connection 38
Fieldbus control 38
Type designation labels 39
Type designation key 40
IGBT supply module 40
LCL filter 41
Weak supply networks 41

3 Moving and unpacking the module

Contents of this chapter 43
Moving and unpacking the module 43

4 Cabinet construction

Contents of this chapter 45
Limitation of liability 45
North America 45
Switching, disconnecting and protecting solution 45
Frame R7i 45
Frame R8i 46
Cabinet temperature supervision 47
Liquid pipe connector installation instructions 49
Installation examples 52
One R7i module and BLCL-13LC-7 or BLCL-14LC-5 LCL filter in a 600 mm wide Rittal VX25 enclosure 53
Layout drawing 53
Pipe routing example 54
Installation stages 55
Overview of kits 56
Stage 1: Installation of common parts 57
Stage 2: Side plates kit and common AC input bus installation 58
Stage 3: Installation of LCL filter related parts 59
Stage 4: LCL filter installation 60
Stage 5: Installation of module installation frame and common mode busbars 61
Stage 6A: DC connection busbars and DC mechanics kit (fuse only) installation 62
Stage 6B: DC switch mechanics kit and DC connection busbars installation . 63
Stage 7: Installation of cooling related parts 64
Stage 8: Module installation 65
Stage 9: Installation of module marine supports, shrouds and air guides 66
Stage 10: Installation of enclosure panels and pressure relief 67
BLCL-15LC-7 / BLCL-24LC-7 in a 600 mm wide Rittal VX25 enclosure 68
Layout drawing 68
Pipe routing example (BLCL-15LC-7) 69
Pipe routing example (BLCL-24LC-7 and BLCL-25LC-7) 69
Installation stages 70
Overview of kits 71

Stage 1: Installation of common parts 72
Stage 2: Installation of LCL side plates and common AC bus 73
Stage 3: Installation of brackets for Flat-PLS holder 74
Stage 4A: BLCL-15LC-7: AC connection and fuse busbars installation 75
Stage 4B: BLCL-24LC-7: AC connection and fuse busbars installation 76
Stage 5: Installation of LCL choke mounting mechanics and LCL ISU connection 77
Stage 6: LCL choke and LCL choke busbar installation 78
Stage 7: Heat exchanger, heat exchanger mechanics and cooling components installation 79
Stage 8A: BLCL-15LC-7: LCL capacitor support, fan support mechanics and fan installation 80
Stage 8B: BLCL-24LC-7: LCL capacitor support, fan support mechanics and fan installation 81
Stage 9: Installation of LCL shroud kit 82
BLCL-15LC-7 / BLCL-24LC-7 in a 600 mm wide generic enclosure 83
BLCL-25LC-7 in a 600 mm wide Rittal VX25 enclosure 85
Installation stages 85
Overview of kits 86
Stage 1: Installation of common parts 87
Stage 2: Installation of LCL side plates and common AC bus 88
Stage 3: Installation of brackets for Flat-PLS holder 89
Stage 4: AC connection and fuse busbars installation 90
Stage 5: Installation of LCL choke mounting mechanics and LCL ISU connection 91
Stage 6: LCL choke and LCL choke busbar installation 92
Stage 7: Heat exchanger, heat exchanger mechanics and cooling components installation 93
Stage 8: LCL capacitor support, fan support mechanics and fan installation . 94
Stage 9: Installation of LCL shroud kit 95
BLCL-25LC-7 in a 600 mm wide generic enclosure 96
One R8i module in a 400 mm wide Rittal VX25 enclosure 98
Layout drawing 98
Pipe routing example 99
Installation stages 100
Overview of kits 101
Stage 1: Installation of common parts 102
Stage 2: Side plate, module mounting mechanics and quick connectors 103
Stage 3: Flat-PLS support kit for AC and common AC connection busbars ... 104
Stage 4: Fan, heat exchanger and cooling components 105
Stage 5A: Installation of DC busbars 106
Stage 5B: Installation of DC switch, DC connection and common mode filter busbar kits 107
Stage 6: Module installation 108
Stage 7: Installation of shrouding 109
One R8i module in a 400 mm wide generic enclosure 110
Two R8i modules in a 600 mm wide Rittal VX25 enclosure 112
Layout drawing 112
Pipe routing example 113
Installation stages 114
Overview of kits 115
Stage 1: Installation of common parts 116

Stage 2: Side plate, module mounting mechanics and quick connectors 117
Stage 3: Flat-PLS support kit for AC and common AC connection busbars ... 118
Stage 4: Fan, heat exchanger and cooling components 119
Stage 5A: Installation of DC busbars 120
Stage 5B: Installation of DC switch, DC connection and common mode filter busbar kits 121
Stage 6: Module installation 122
Stage 7: Installation of shrouding 123
Two R8i modules in a 600 mm wide generic enclosure 124
Three R8i modules in a 800 mm wide Rittal VX25 enclosure 126
Layout drawing 126
Pipe routing example 127
Installation stages 128
Overview of kits 129
Stage 1: Installation of common parts 130
Stage 2: Side plate, module mounting mechanics and quick connectors 131
Stage 3: Flat-PLS support kit for AC and common AC connection busbars ... 132
Stage 4: Fan, heat exchanger and cooling components 133
Stage 5A: Installation of DC busbars 134
Stage 5B: Installation of DC switch, DC connection and common mode filter busbar kits 135
Stage 6: Module installation 136
Stage 7: Installation of shrouding 137
Three R8i modules in a 800 mm wide generic enclosure 138

5 Electrical installation

Contents of this chapter 141
Safety and liability 141
Electrical safety precautions 142
Isolation from AC supply networks 144
Isolation from common DC bus 145
General notes 146
Printed circuit boards 146
Handling fiber optic cables 146
Checking the insulation of the assembly 146
Measuring the insulation resistance of the input power cable 146
Connecting the input power cables/busbars 147
Connection diagram (frame R7i) 147
Connection diagram (frame R8i and multiples) 148
Connection procedure for power connections inside the IGBT supply module cubicle 149
Connection procedure 150
Connecting the LCL filter 152
Cabling the LCL filter 152
Cabling specification (frame R7i) 155
Cabling specification (frame R8i) 156
Main breaker / contactor 157
Installing the charging circuit 157
Connecting the external power supply cable for the auxiliary circuit 157
Connecting the control cables 158
Connection diagram 158
Connection procedure 158

Connectors X50…X59 and fiber optic connectors 159
Connecting a PC 159
Installing option modules 160
Installing and using CIO-01 I/O module 161

6 The control unit

Contents of this chapter 163
General 163
BCU layout 164
UCU-22…24 layout 166
Default I/O diagram of the supply control unit (BCU) 169
Default I/O diagram of the supply control unit (UCU-22…24) 172
Additional information on the connections 175
Power supply for the control unit (XPOW) 175
The X485 connector (BCU) 175
The X485 connector (UCU) 175
Safe torque off (XSTO, XSTO OUT) 176
FSO safety functions module connection (X12, with BCU only) 176
SDHC memory card slot 176
MicroSDHC memory card slot 176
Connector data 177
BCU ground isolation diagram 180
UCU-22…24 ground isolation diagram 181

7 Installation checklist

Contents of this chapter 183
Checklist 183

8 Start-up

Contents of this chapter 187
Start-up procedure 188
Switching the supply unit off 190
Additional instructions for closing the DC switch-disconnector 191
Charging sequence 191

9 Maintenance

Contents of this chapter 193
Maintenance intervals 193
Description of symbols 193
Recommended maintenance intervals after start-up 194
Maintenance timers and counters 195
Cooling system 195
Cabinet 195
Cleaning the interior of the cabinet 195
Cooling fans 196
Frame R7i – internal module fan replacement 196
Replacing the cooling fan of the IGBT supply module (frame R8i) 198
Replacing the cabinet cooling fan (frame R7i) 199
Replacing the cooling fan of the LCL filter (frame R8i) 201

IGBT supply module 202
Replacing the IGBT supply module (frame R7i) 202
Removing the module 202
Reinstalling the module 203
Replacing the IGBT supply module (frame R8i) 204
Assembling the service platform 204
Removing the module 205
Reinstalling the module 208
Capacitors 209
Reforming the capacitors 209
Replacing the capacitors of the LCL filter (frame R7i) 209
Replacing the DC fuses (frame R7i) 211
Control panel 212
BCU control unit 213
Replacing the memory unit 213
Replacing the BCU control unit battery 213
UCU control unit 214
Replacing the memory unit (UCU-22...24) 214
Replacing the UCU control unit battery 215
LEDs and other status indicators 216
Control panel and panel platform/holder LEDs 216
R7i and R8i module LEDs 216
Reduced run 217
Starting reduced run operation 217
Resuming normal operation 218
Functional safety components 218

10 Ordering information

Contents of this chapter 219
Kit code key 220
Frame R7i and multiples 222
IGBT supply modules 222
LCL filters 223
Control panel 225
Control electronics 226
Control unit (BCU) 226
Control unit (UCU) 227
Fiber optic cables 228
Auxiliary measurement unit (BAMU) 228
CIO-01 I/O module 228
Mechanical installation accessories 229
Module, LCL filter, and electronics mounting parts 229
Module installation frame 230
Marine support kit 230
Shrouding and air guide 231
Pressure relief kit 231
Lifting device 232
AC-side components 232
Main switch kit 232
Main contactor 233
Main circuit breakers and wagons 233
IEC busbar shim kit 238

Main circuit breaker and wagon cover 239
Main fuses 239
AC fuses 240
AC-DC charging kits for line-up charging 241
AC busbars 243
DC-side components 244
DC bus installation parts (for Rittal VX25 enclosures) 244
DC connection parts (for Rittal VX25 enclosures) 244
DC fuses 245
DC switch-disconnector kits for unit charging 246
Unit charging components (for units with DC switch-disconnector) 247
Switch-disconnector for line-up charging 248
Common mode filters 248
Cooling system parts 248
Cooling system parts (600 mm VX25 enclosure with 1 module) 248
Cabinet fans (600 mm VX25 enclosure with 1 module) 250
Coolant distribution manifold kits 250
Piping 251
Frame R8i and multiples 252
IGBT supply modules 252
LCL filters 253
Control panel 254
Control electronics 255
Control unit 255
Fiber optic cables 255
Auxiliary measurement unit (BAMU) 256
CIO-01 I/O module 256
Mechanical installation accessories 257
Adapter kit (for Rittal VX25 enclosures) 257
Module top/bottom guides 258
Shrouding 260
Marine support kit for LCL filters 261
Lifting device 261
AC-side components 262
Main circuit breakers and wagons 262
IEC busbar shim kits 267
Main circuit breaker and wagon cover 267
AC fuses 268
AC-DC charging kits for line-up charging 269
AC busbars for LCL filters 270
LCL fuse busbars 271
LCL choke busbars 272
LCL choke installation kits 273
LCL capacitor installation kits 274
LCL ISU connection kits 275
AC busbars 275
Quick connector 276
DC-side components 276
DC bus installation parts (for Rittal VX25 enclosures) 276
DC connection parts 1 of 2 (for Rittal VX25 enclosures) 277
DC connection parts 1 of 2 (for generic enclosures) 278
DC fuses 280

DC switch-disconnector kits for unit charging 281
DC charging kits for unit charging (for units with DC switch-disconnector) .. 282
Charging resistors for unit charging (for units with DC switch-disconnector) . 283
DC switch-disconnector for line-up charging 283
DC connection parts 2 of 2 284
Flat-PLS busbars (common DC) for LCL filters 284
Charging mechanics 285
DC connection charging mechanics 285
Common mode filter busbars 286
Common mode filters 286
Cooling system parts for supply modules 286
Coolant distribution manifold kits 286
Piping 288
Heat exchanger 288
Cooling system parts for LCL filters 289
Cooling fans for LCL filters 290
Cooling fans for IGBT supply modules 291

11 Internal cooling circuit

Contents of this chapter 293
Applicability 293
Internal cooling system 293
Connection to a cooling unit 295
Connection to an ACS880-1007LC cooling unit 295
Connection to a custom cooling unit 295
General requirements 295
Coolant temperature control 295
Filling up and bleeding the internal cooling circuit 296
Drive line-ups with an ACS880-1007LC cooling unit 296
Drive line-ups with a custom cooling unit 296
Draining the internal cooling circuit 297
Maintenance intervals 297
Technical data 298
Coolant specification 298
Coolant type 298
Temperature limits 298
Pressure limits 300
Coolant flow rate limits 300
Cooling circuit materials 300

12 Technical data

Contents of this chapter 301
Ratings 302
Definitions 304
Derating 304
Surrounding air temperature derating 304
Altitude derating 304
Type equivalence table 305
Fuses 306
LCL filters 307
Kit contents 307

Technical data 307
Charging kit contents 308
Dimensions and weights 308
Free space requirements 309
Allowable mounting positions 309
Losses, cooling data and noise 310
Tightening torques 315
Electrical connections 315
Mechanical connections 315
Insulation supports 315
Cable lugs 315
Typical power cable sizes 316
Terminal and cable entry data for the power cables 317
Electrical power network specification 317
Control unit connection data 318
Coolant connections 318
Efficiency 318
Energy efficiency data (ecodesign) 318
Protection classes 318
Ambient conditions 319
Cooling 320
Colors 320
Materials 320
Module 320
Packaging of module 320
Packaging of options 321
Manuals 321
Disposal 321
Auxiliary circuit current consumption 322
Control equipment 322
Cooling fans 322
Definitions 322
Standards and markings 322
Disclaimers 323
Generic disclaimer 323
Cyber security disclaimer 323

13 Dimension drawings

Contents of this chapter 325
Frame R7i module and installation frame 326
Installation frame for a module in upright position 327
Installation frame for a module on its side 328
Frame R8i module 329
Quick connector 330
LCL filter components 331
BLCL-13LC-7, chokes 331
BLCL-13LC-7, chokes and capacitors 332
BLCL-14LC-5, chokes 333
BLCL-14LC-5, chokes and capacitors 334
Grid-side choke (BLCL-15LC-7 and BLCL-24LC-7) 335
Grid-side choke (BLCL-25LC-7) 336
Converter-side choke (BLCL-15LC-7 and BLCL-24LC-7) 337

Converter-side choke (BLCL-25LC-7) 338
Capacitor (BLCL-15LC-7, BLCL-24LC-7, BLCL-25LC-7) 339
Control electronics 340
BCU control unit 340
UCU control unit 341
DPMP-01 door mounting kit 342
Main switch-disconnectors 343
OT1000E12 343
OT800U12 344
Main contactors 345
AF400 345
Main circuit breakers 346
E2.2S-A (UL/CSA) 346
E4.2S-A (UL/CSA) 347
Fuse blocks (Bussmann) 348
Fuses of type 170M70xx 349

14 Example circuit diagrams

Contents of this chapter 351
Contents of example circuit diagrams 351
ACS880-204LC IGBT supply unit 1×R7i (3AXD10001871893) 351
ACS880-204LC IGBT supply unit 2×R8i (3AXD10000695767) 352
ACS880-204LC IGBT supply unit 4×R8i (3AXD10000695768) 352
Frame 1×R7i 353
Frame 4×R7i 376
Frame 2×R8i 399
Frame 4×R8i 422

Further information

1

Introduction to the manual

Contents of this chapter

This chapter gives basic information on the manual.

Applicability

The manual is applicable to the ACS880-204LC liquid-cooled IGBT supply modules for user-defined cabinet installations.

Safety instructions

Obey all safety instructions of the drive.

- Read the **complete safety instructions** before you install, commission, use or service the drive. The complete safety instructions are given in ACS880 liquid-cooled multidrives cabinets and modules safety instructions (3AXD50000048633 [English]).
- Read the warnings of the software function before you take the function in use or change its default parameter settings. Read the warnings of the parameter before you change its default setting. Refer to the firmware manual.

Target audience

This manual is intended for people who plan the installation, install, commission and do maintenance work on the drive, or create instructions for the end user of the drive concerning the installation and maintenance of the drive.

Read the manual before you work on the drive. You are expected to know the fundamentals of electricity, wiring, electrical components and electrical schematic symbols.

Categorization by frame size and option code

The instructions and technical data which concern only certain module or frame sizes are marked with a size identifier.

The module size can be identified from the basic code visible on the type designation label, for example, “ACS880-204LC-0400A-7”, where 0400A is the module size. The option codes of the module are listed after a plus sign. Chapter Ordering information explains the type designation code in detail.

The frame size of the module can be, for example, R7i, R8i or 2×R8i, the latter representing a supply unit consisting of two parallel-connected R8i supply modules. The table under section Ratings (page 302) lists the units and frame sizes.

Use of component designations

Some device names in the manual include the component designation in brackets (for example, [Q20]). This will help you to identify the components in the circuit diagrams of the drive.

Terms and abbreviations

Term	Description
ACS-AP-…	Assistant control panel
BAMU	Auxiliary measurement unit
BCON	Type of control board
BCU	Type of control unit
BDPS	Module internal power supply board
CIO	I/O module for controlling cooling fans
Control unit	The part in which the control program runs.
Cubicle	One section of a cabinet-installed drive. A cubicle is typically behind a door of its own.
DC link	DC circuit between rectifier and inverter
DDCS	Distributed drives communication system protocol
DI	Digital input
Drive	Frequency converter for controlling AC motors
EMC	Electromagnetic compatibility
EMI	Electromagnetic interference
Frame, frame size	Physical size of the drive or power module
ICU	Incoming unit
IGBT	Insulated gate bipolar transistor
IGBT supply module	IGBT bridge and related components enclosed inside a metal frame or enclosure. Intended for cabinet installation.
IGBT supply unit	IGBT supply module(s) under control of one control unit, and related components.
Incoming unit	Part of the cabinet line-up that contains the input power cable terminals. Can also contain switching equipment etc.
Intermediate circuit	DC circuit between rectifier and inverter
INU	Inverter unit
Inverter module	Inverter bridge, related components and drive DC link capacitors enclosed in a metal frame or enclosure. Intended for cabinet installation.
ISU	IGBT supply unit
LCL filter	Inductor-capacitor-inductor filter

Term	Description
Multidrive	Drive for controlling several motors which are typically coupled to the same machinery. Includes one supply unit, and one or several inverter units.
Parameter	In the drive control program, user-adjustable operation instruction to the drive, or signal measured or calculated by the drive. In some (for example fieldbus) contexts, a value that can be accessed as an object. For example, variable, constant, or signal.
RDCO	Optical DDCS communication module
Supply unit	Supply module(s) under control of one control unit, and related components.
UCU	Type of control unit
USCA-02	Adapter for installing F-series option modules onto the UCU control unit.

Related documents

You can find manuals on the Internet. See below for the relevant code/link. For more documentation, go to www.abb.com/drives/documents.

	Manuals for ACS880 multidrives modules

2

Operation principle and hardware description

Contents of this chapter

This chapter describes how the IGBT supply unit works and the hardware of the ACS880-204LC IGBT supply module.

Operation principle

IGBT supply unit rectifies three-phase AC current to direct current for the intermediate DC link of the drive. The intermediate DC link supplies the inverters that run the motors. There can be one inverter unit only (single drives) or several inverter units (multidrives) connected to the intermediate circuit.

The LCL filter is an essential part of the IGBT supply unit. The supply module does not work without the filter. It suppresses the AC voltage distortion and current harmonics. The high AC inductance smooths the line voltage waveform distorted by the high-frequency switching of the converter. Capacitive component of the filter effectively filters the high-frequency (over 1 kHz) harmonics.

The IGBT supply unit can be equipped with optimal grid control functionality and work as a grid converter. The grid converter can be used to produce an island AC grid. It is also possible to use grid converters in parallel with generators to support the operation of a distributed power system. The grid converter produces sinusoidal three-phase AC voltages from the DC link voltage of the system. AC voltage magnitude and frequency can be defined by the user. A grid converter can be used in eg. marine applications where ordinary power grid connection is not available. For further details, refer to Optimal grid control of ACS880 IGBT supply control program supplement (3AXD50000164745 [English]) or Optimal grid control of ACS880 IGBT supply control program (YISLX) supplement (3AXD50001096762 [English]).

Optimal grid control functionality is in use only when the license key N8053 has been activated on the memory unit. This has been done at the factory for a unit with the option +N8053. You can see the license information with the Drive Composer PC tool or ACS-AP-x control panel in **System info** - **Licenses**. If the license key for the optimal grid control is missing, the converter indicates fault 6E1F Licensing fault. Auxiliary code in the event logger indicates the plus code of missing license, in this case N8053. For further assistance, contact your local ABB representative.

Simplified main circuit diagram

This figure shows the simplified main circuit diagram of the rectifier.

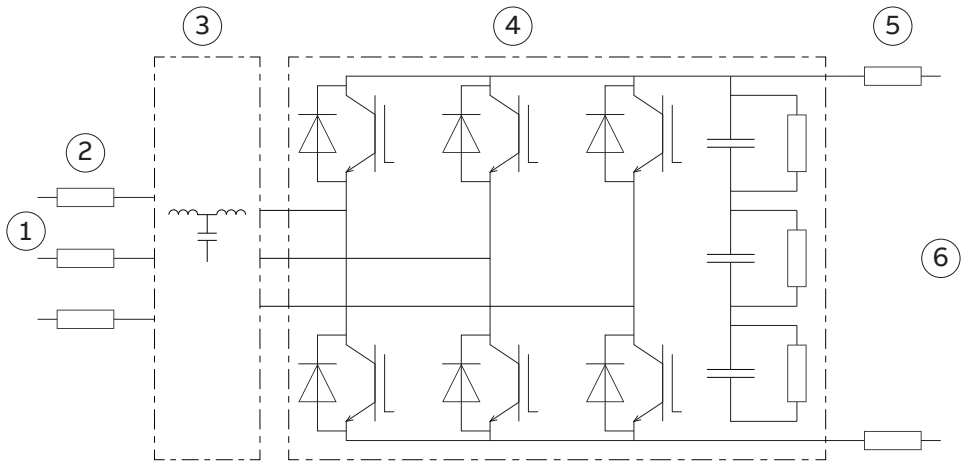

1.	AC voltage
2.	AC fuses
3.	LCL filter
4.	IGBT supply module
5.	DC fuses
6.	DC voltage

Charging

A charging circuit powers up the DC link capacitors of the drive system smoothly. Discharged capacitors cannot be directly connected to the full supply voltage. The charging current must be limited until the capacitors are charged and ready for normal use.

The control program has a function for controlling the charging circuit. For further information, refer to the firmware manual.

ACS880-204LC contains two charging circuits: AC-DC charging circuit charges the cabinet line-up, and DC-DC charging circuit charges the DC capacitors of one cubicle.

Overview diagram of the drive system

The following figure shows a simplified diagram of a common DC bus drive system.

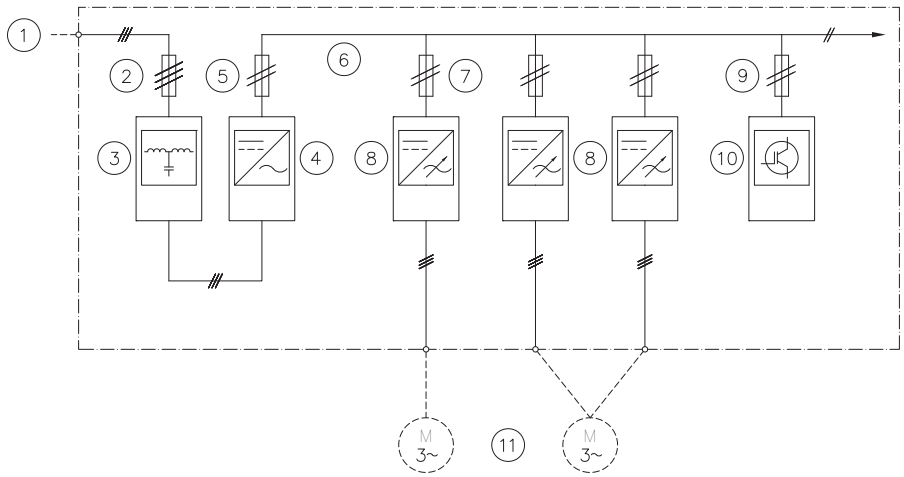

1	AC supply
2	Input AC fuses
3	LCL filter
4	IGBT supply unit
5	Supply unit DC fuses (with or without DC switch-disconnector)
6	DC bus
7	Inverter DC fuses (with or without DC switch-disconnector)
8	Inverter units (in the example, one of the two units consists of two inverter modules connected in parallel)
9	DC fuses for optional brake chopper
10	Optional brake chopper
11	Motor(s)

Cooling system

See chapter Internal cooling circuit (page 293).

Single-line circuit diagrams of the supply unit

The following figures are examples of possible IGBT supply unit configurations. The tables give explanations for the numbers and letters of the diagrams. For components, see the chapter Ordering information.

Frame 1×R7i

The following figure shows a connection example of a supply unit with one frame R7i module.

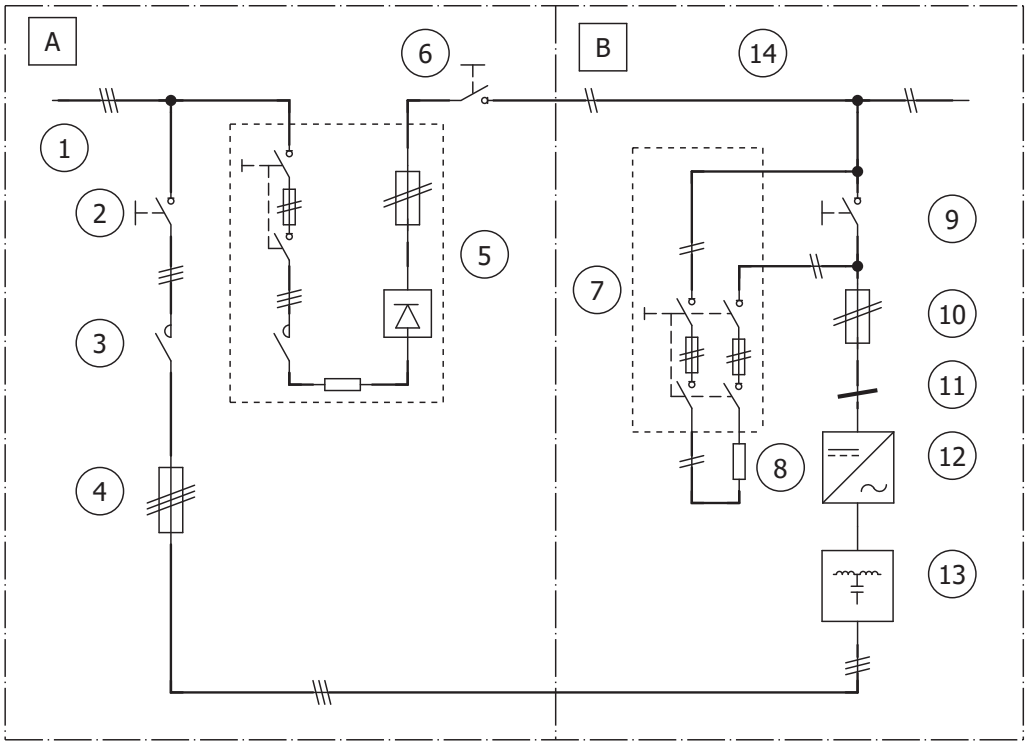

A	Incoming cubicle
1	AC supply
2	Main switch-disconnector
3	Main contactor
4	DC switch-disconnector for line-up charging
5	AC-DC charging kit (line-up charging)
6	DC switch-disconnector for line-up charging
B	IGBT supply module cubicle
7	DC-DC charging kit (unit charging)
8	Resistors for DC-DC charging
9	DC switch-disconnector
10	DC fuse
11	Common mode filter
12	IGBT supply module (frame R7i)
13	LCL filter kit
14	DC link

Frame 4×R7i

Note that frames 2×R7i…4×R7i are available for special customer-built configurations only, and their offering is limited. Customer has to make detailed mechanical design and cabinet installation by himself.

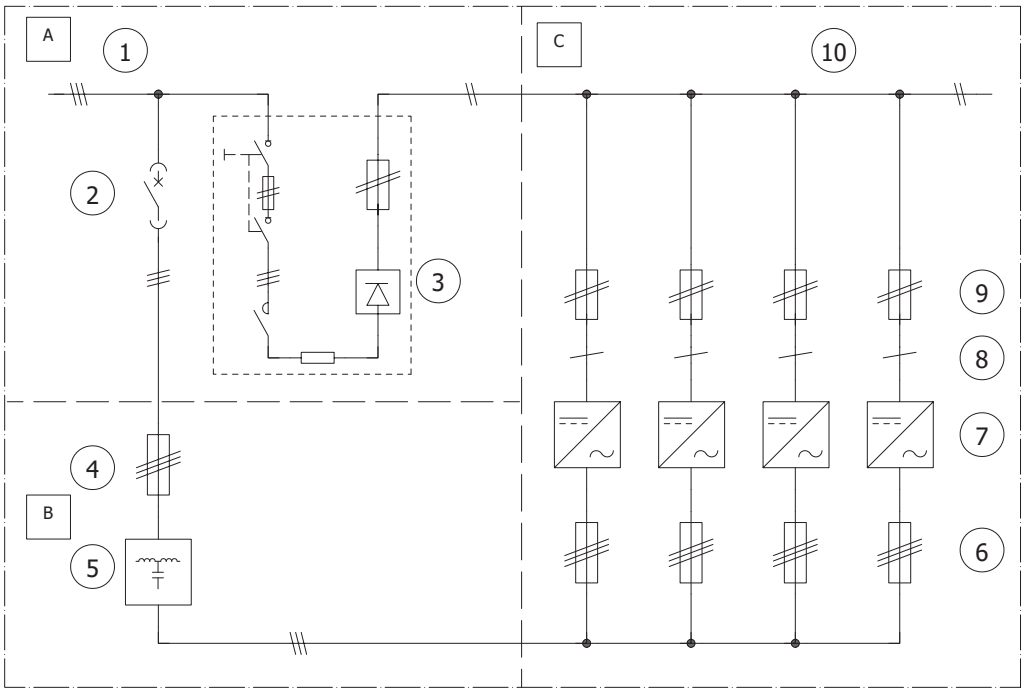

A	Incoming cubicle
1	AC supply
2	Main circuit breaker
3	AC-DC charging kit (line-up charging)
B	LCL filter cubicles
4	AC fuses
5	LCL filter
C	IGBT supply module cubicle
6	AC fuses
7	IGBT supply modules (frame R7i)
8	Common mode filters
9	DC fuses
10	DC link

Frame 1×R8i

The following figure shows a connection example of a supply unit with one frame R8i module.

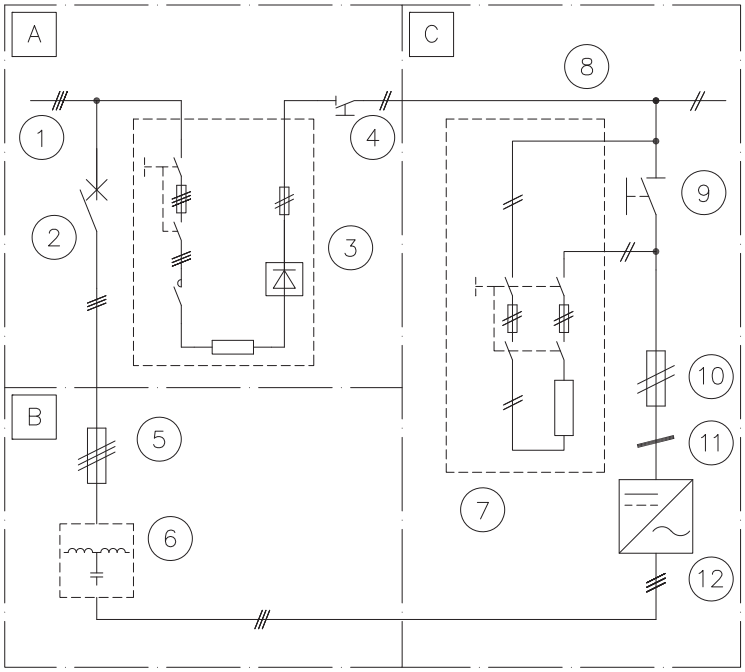

1	AC supply
A	Incoming cubicle
2	Main circuit breaker
3	AC-DC charging kit (line-up charging)
4	DC switch-disconnector for line-up charging
B	LCL filter cubicle
5	AC fuses
6	LCL filter kit
C	IGBT supply module cubicle
7	DC-DC charging kit
8	DC link
9	DC switch-disconnector
10	DC fuse
11	Common mode filter
12	IGBT supply module (frame R8i)

Frame R8i multiples

The following figure shows a connection example of a supply unit with multiple frame R8i modules (3×R8i).

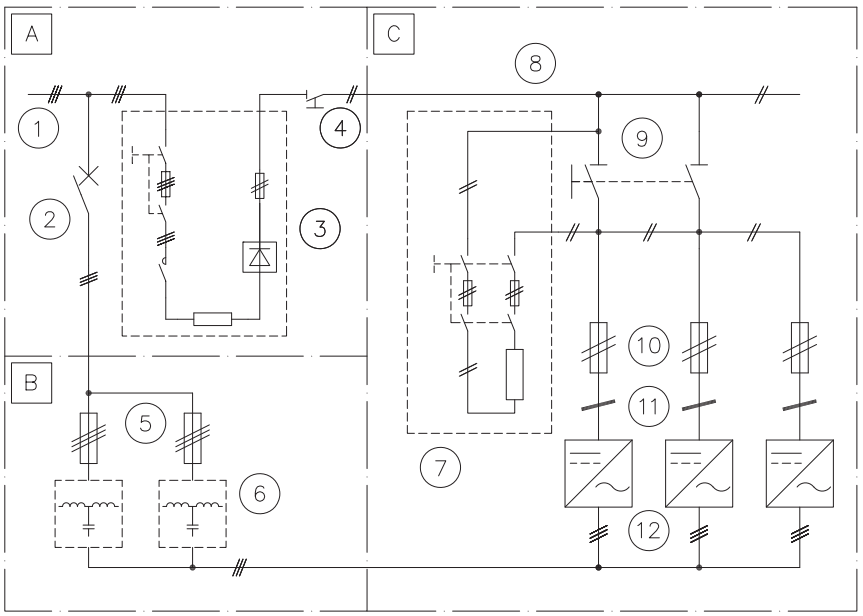

1	AC supply
A	Incoming cubicle
2	Main circuit breaker
3	AC-DC charging kit (line-up charging)
4	DC switch-disconnector for line-up charging
B	LCL filter cubicle
5	AC fuses
6	LCL filter kit
C	IGBT supply module cubicle
7	DC-DC charging kit
8	DC link
9	DC switch-disconnector
10	DC fuse
11	Common mode filter
12	IGBT supply modules (frame R8i)

IGBT supply module hardware

Frame R7i hardware

Frame R7i modules are used in single or parallel module configurations. The R7i module is designed for mounting in an installation frame, which in turn is mounted into the cubicle. The AC and DC power connectors of the frame are bolted to busbars. When the module is inserted into the frame, the AC and DC power connections of the module engage with quick connectors in the frame. The module is secured by a locking screw that is accessible from the front.

The front cover plate of the module can be pulled out for access to the circuit board compartment without removing the module. This manual presents cubicle designs for one module.

Module layout

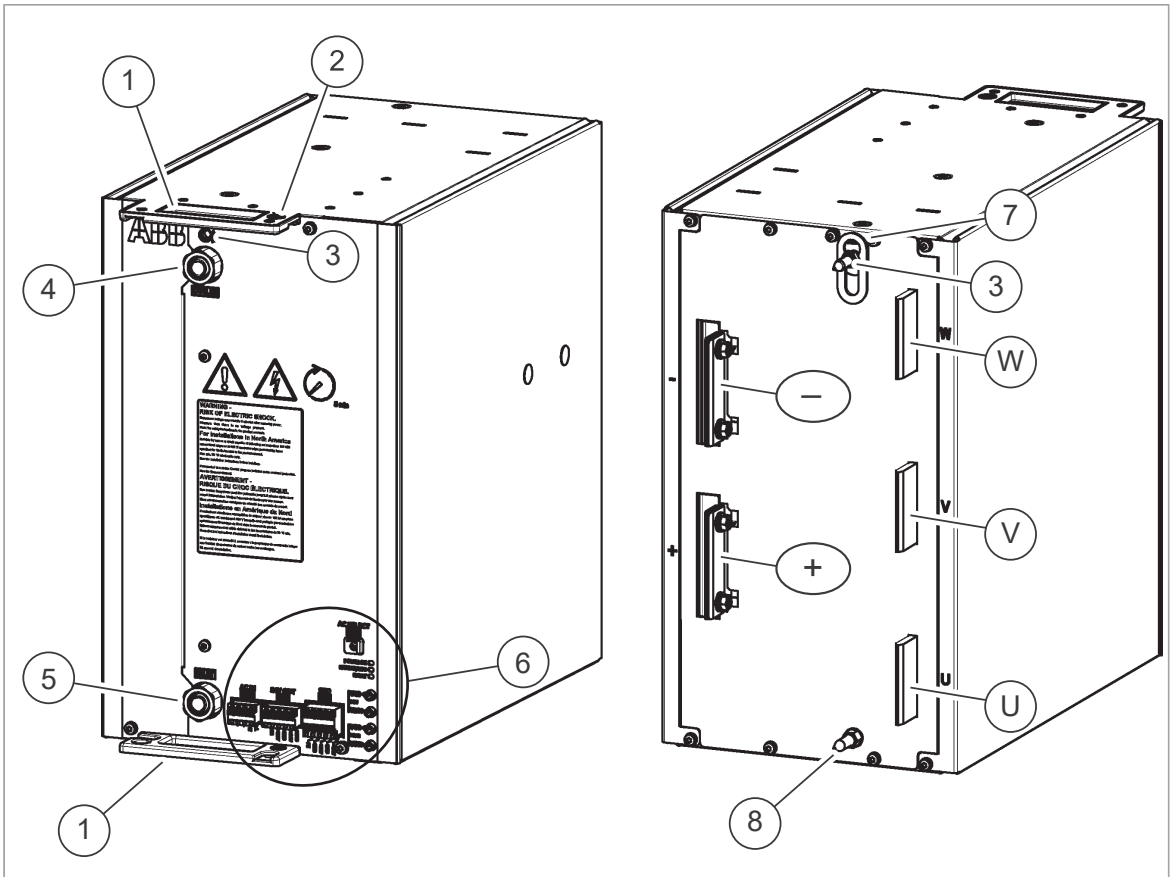

1	Handle
2	Lifting eye, front
3	Locking screw (for 6 mm hex key). Torque: 5 N·m (3.7 lbf·ft) maximum.
4	Coolant out connector
5	Coolant in connector
6	Connectors X50, X52 and X53; fiber optic connectors; LEDs; auxiliary voltage selector X59.
7	Lifting ring, rear
8	Guide pin

+ –	DC connection busbars. The busbars engage with the quick connectors of the installation frame.
U V W	AC connection busbars. The busbars engage with the quick connectors of the installation frame.

Coolant connectors

The coolant pipe inlet and outlet connectors are located at the bottom front and top front of the module respectively. The connectors are for 16/13 millimeter PA (polyamide) pipe.

Installation frame

See the dimension drawings.

Connectors X50, X52 and X53; Auxiliary voltage selector X59

R7i modules contain a power supply board that provides 24 V DC for the circuit boards of the module. The 24 V DC voltage provided by the power supply board is also available on X53, and can be used to power the control unit of a single R7i module.

Note: With parallel-connected modules, it is strongly recommended to use an external 24 V DC supply to power the control unit.

The power supply board of the module is powered internally from the DC link. An auxiliary voltage of 230 V AC or 115 V AC (selectable) can optionally be connected to terminal block X50 to feed the power supply board even when the DC link is not live. The selection between 115 V and 230 V is made with selector plug X59. The setting can be changed by removing the screw, moving the plug into the 115 V position, and reinstalling the screw.

Note: The Safe torque off (STO) safety function is only implemented in inverter units. Therefore, the STO function cannot be used in supply, brake and converter units. In supply, brake and converter units, de-energizing any connection of STO IN (X52) connector stops the unit. Note that this stop in supply or brake module is not safety related and must not be used for safety function purposes.

The “24V” inputs on X52 must be connected to +24 V (on connector X53, for example) on each module. On a new module, a jumper wire set installed at the factory makes this connection.

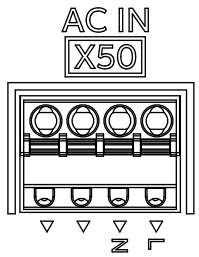	Auxiliary voltage input for internal power supply of module. Voltage selected by X59.
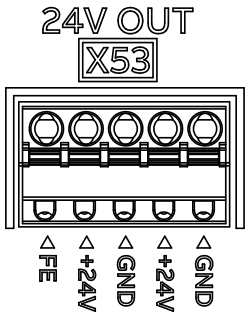	24 V DC output (for eg. control unit)
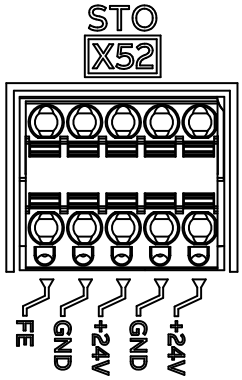	STO connectors of the module. Must be connected to 24 V DC for the module to start.
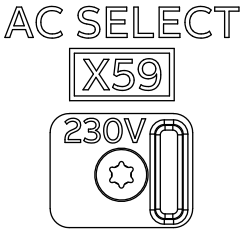	Auxiliary voltage: 230 V AC
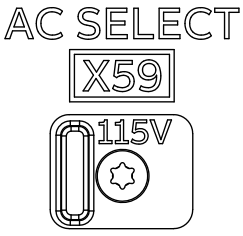	Auxiliary voltage: 115 V AC

Fiber optic connectors

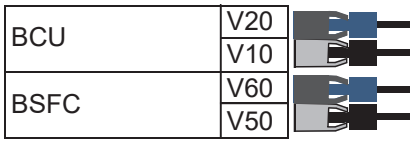

Name	Description
BCU or UCU	Control unit connection. Must be connected by the installer.
BSFC	Charging controller connection. Must be connected by the installer.

LEDs

LED	Color	Indication
FAULT	Continuous red	There is an active fault in the module.
ENABLE / STO	Continuous green	The module is ready for use.
ENABLE / STO	Continuous yellow	XSTO connectors are de-energized.
POWER OK	Continuous green	Supply voltage of the internal circuit boards is OK (> 21 V).

For LCL filter hardware, see chapter Cabinet construction.

Frame R8i hardware

Frame R8i modules are used in single or parallel module configurations.

The DC connection of the module is by busbars and located at the top. The AC connection is via a quick connector at the back of the module that couples when the module is inserted into the cubicle.

Module layout

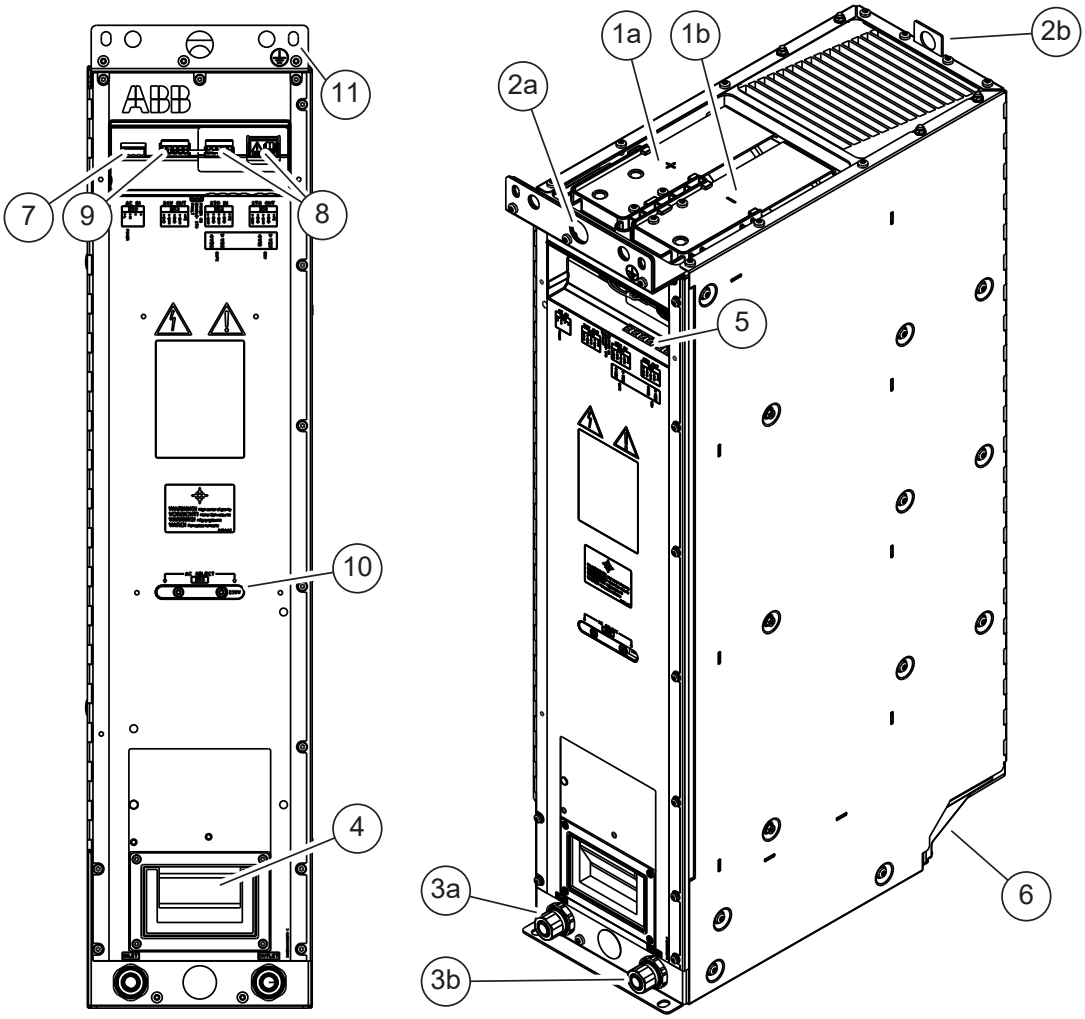

1	DC connection busbars, + (a) and - (b)
2	Lifting eyes, front (a) and back (b)
3	Coolant in (a) and out (b) connectors
4	Handle
5	Fiber optic connectors
6	Quick connector (AC connection) (the counterpart fastened to the cabinet behind the module)
7	Terminal block X50 (auxiliary power input for internal boards)
8	Terminal block X51 and X52 (Safe torque off in inverter modules only)
9	Terminal block X53 (24 V DC power output)
10	Auxiliary voltage selector X59 (115 or 230 V)
11	Unpainted fastening hole. The grounding point between module frame and cabinet frame.

Coolant connectors

The coolant pipe inlet and outlet connectors are located at the bottom front of the module. The connectors are for 16/13 millimeter PA (polyamide) pipe.

Connectors X50...X59

R8i modules contain a power supply (BDPS) that provides 24 V DC for the circuit boards of the module. The 24 V DC voltage provided by the BDPS is also available on X53, and can be used to power the BCU control unit of a single R8i module.

Note: With parallel-connected modules, it is strongly recommended to use an external 24 V DC supply to power the control unit.

The BDPS is powered internally from the DC link. An auxiliary voltage of 230 V AC or 115 V AC (selectable) can optionally be fed to terminal block X50 to power the BDPS even when the DC link is not live. The selection between 115 V and 230 V is made with selector plug X59. The setting can be changed by removing the two screws, turning the plug 180 degrees, and reinstalling the screws.

Note: The Safe torque off (STO) safety function is only implemented in inverter units. Therefore, the STO function can not be used in supply, brake and converter units. In supply, brake and converter units, de-energizing any connection of STO IN (X52) connector stops the unit. Note that this stop in supply or brake module is not safety related and must not be used for safety function purposes.

The “24V” inputs on X52 must be connected to +24 V (on connector X53, for example) on each module. On a new module, a jumper wire set installed at the factory makes this connection.

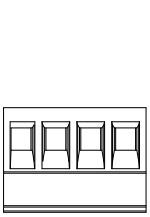

AC IN			
X50			
L	N		
POWER			

Auxiliary voltage inputs for internal power supply (BDPS)

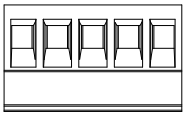

24V OUT				
X53				
GND	+24V	GND	+24V	FE

24 V DC output (for eg. BCU control unit)

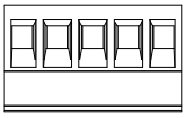

STO IN				
X52				
+24V	GND	+24V	GND	FE

STO connectors of the module. Must be connected to 24 V DC for the supply module to start.

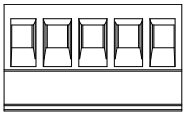

STO OUT				
X51				
+24V	GND	+24V	GND	FE

Not in use.

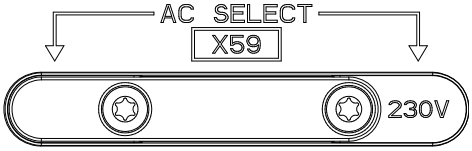

Auxiliary voltage: 230 V AC

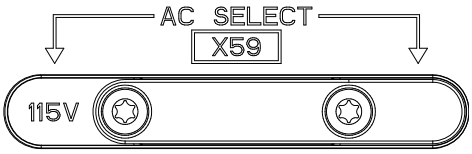

Auxiliary voltage: 115 V AC

Fiber optic connectors

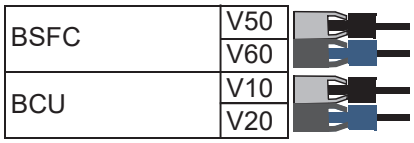

Name	Description
BSFC	Charging controller connection. Must be connected by the installer.
BCU	Control unit connection. Must be connected by the installer.

LEDs

LED	Color	Indication
FAULT	Continuous red	There is an active fault in the module.
ENABLE / STO	Continuous green	The module is ready for use.

LED	Color	Indication
ENABLE / STO	Continuous yellow	XSTO connectors are de-energized.
POWER OK	Continuous green	Supply voltage of the internal circuit boards is OK (> 21 V).

For LCL filter hardware, see chapter Cabinet construction (page 45).

Control interfaces

Frame R7i and R8i (and multiples, if any) modules are controlled by a single control unit installed separately from the module(s). The control unit is connected to each module by a fiber optic link. The control unit can be powered from the module (terminal block X53), from an external 24 V DC supply, or both for redundancy. The control unit contains the basic I/Os and slots for optional I/O modules. Other equipment is primarily installed on separate mounting plates.

Overview of the control connections of the BCU control unit

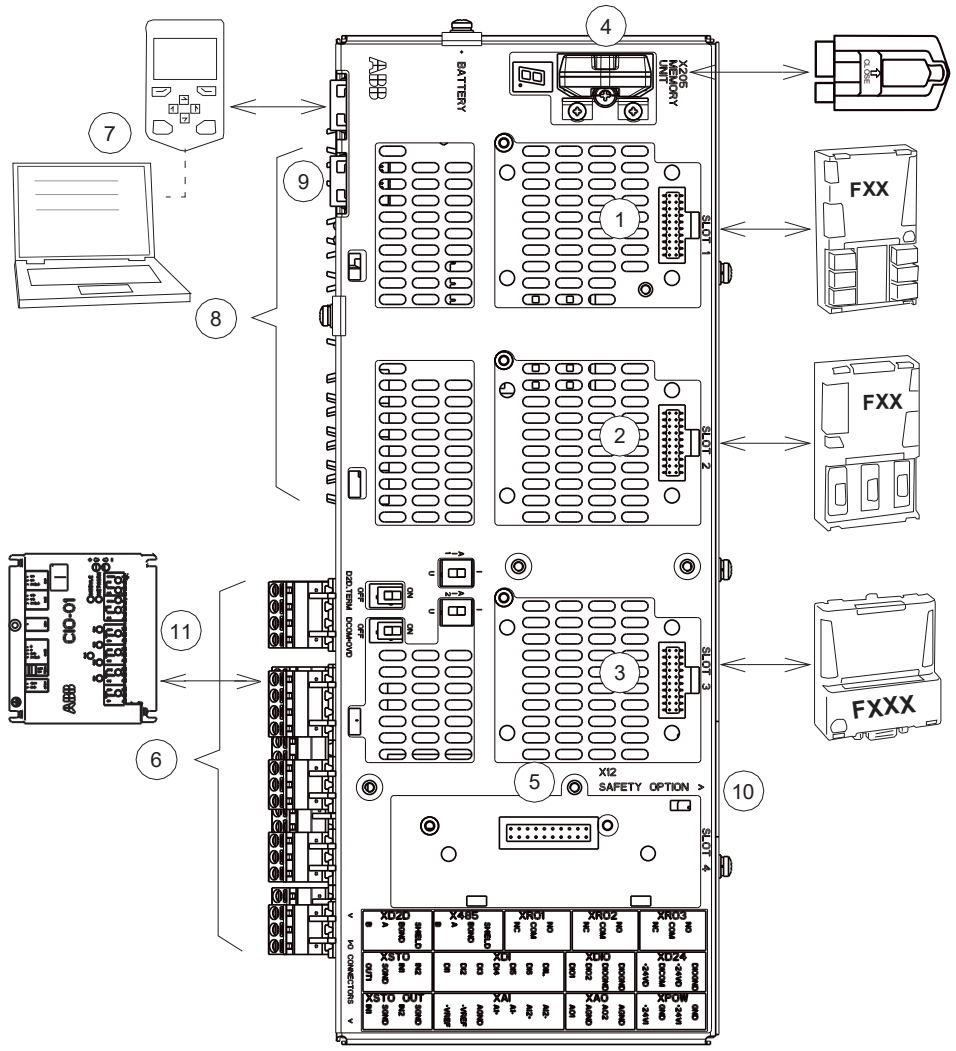

1 2 3	Analog and digital I/O extension modules and fieldbus communication modules can be inserted into slots 1, 2 and 3.	7	Control panel.
4	Memory unit	8	Fiber optic links to power modules (inverter, supply, brake or converter)
5	Slot 4 for RDCO-0x	9	Ethernet port. Not in use.
6	Terminal blocks.	10	Safety option interface. Only in use for the inverter units.
11	Distributed I/O bus with CIO-02 modules for cooling fan monitoring and control.		

Overview of the control connections of the UCU control unit

This diagram shows the control connections and interfaces of the UCU control unit.

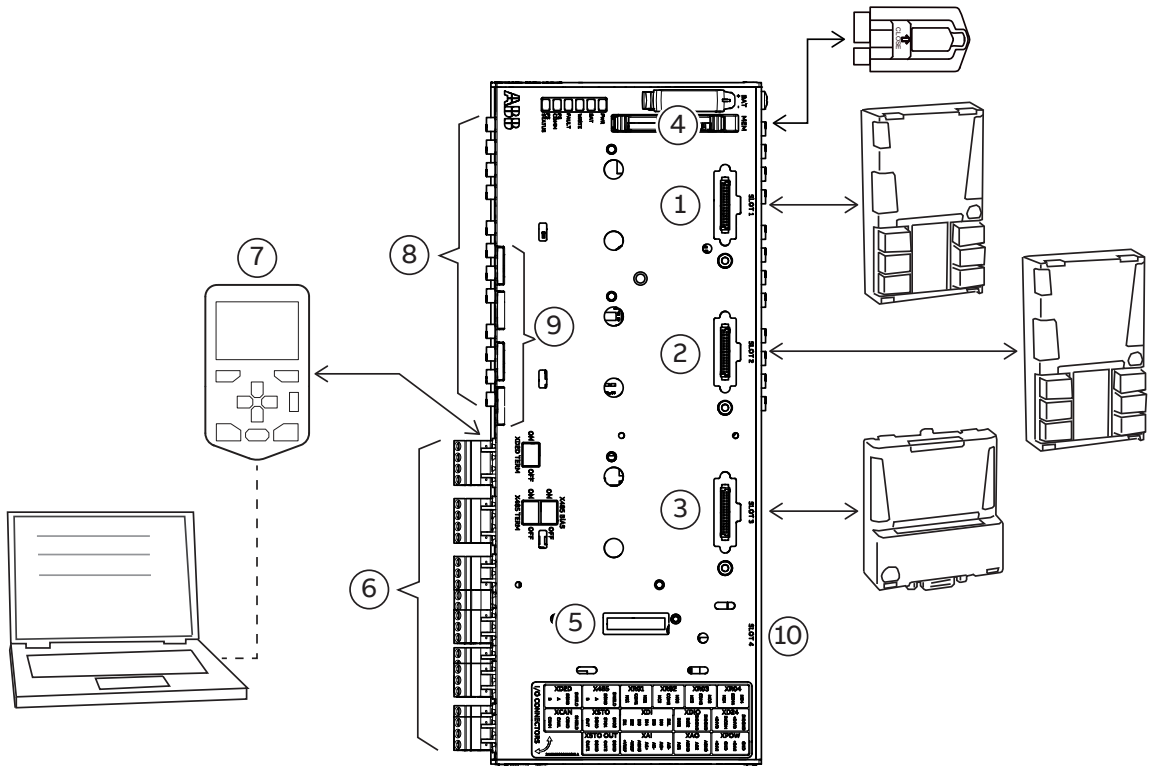

1 2 3	Analog and digital I/O extension modules and fieldbus communication modules can be inserted into slots 1, 2 and 3.	7	Control panel
4	Memory unit	8	Fiber optic links to power modules (inverter, supply, brake or converter)
5	Slot 4 for RDCO module	9	Ethernet ports
6	Terminal blocks	10	Safety option interface. Reserved for future use.

Supply unit control devices

Main disconnecting device

The unit must be equipped with a main circuit breaker [Q1], or main switch-disconnector and contactor. With this device, you can isolate the main circuit of the drive from the power line.

WARNING!
The breaker does not isolate network side input power terminals or the auxiliary circuit from the power line. To isolate the input power terminals, open the main breaker of the supply transformer and lock it to the open position.

Auxiliary voltage switch

The unit can be equipped with an auxiliary voltage switch. Using the switch, you can disconnect the auxiliary circuit from the power line.

Operating switch

The cabinet can be equipped with an operating switch [S21].

By default, the operating switch controls the unit as follows:

- The ENABLE/RUN position: The control program closes the charging contactor [Q4] and the main DC link is charged. After the DC link is charged, the main circuit breaker / contactor [Q1] will be closed and the charging contactor [Q4] opened. The module starts operating.
- The OFF position: The control program opens the main circuit breaker [Q1] and the module stops rectifying.

Emergency stop and emergency stop reset buttons

The cabinet can be equipped with an emergency stop button and an emergency stop reset button. Pressing the emergency stop button activates the emergency stop function of the supply unit. The button locks to open position automatically. You must release the button before you can return to the normal operation. Before the restart, you also need to reset the emergency stop circuit with the reset button.

Note: The customer is fully responsible for implementing and testing the functional safety circuits according to the relevant legislation and acceptance testing regulations. The functional safety option manuals give examples on implementing the safety circuits in ACS880 liquid-cooled multidrives.

Control panel [A59]

The control panel is the user interface of the unit. An example control panel is shown below.

With the control panel, the user can:

- start and stop the unit
- view and reset the fault and warning messages, and view the fault history
- view actual signals
- change parameter settings
- change between local (control panel) and remote (external device) control.

The Loc/Rem key of the panel selects between the local and remote control modes.

Line-up charging switch

The supply unit can be equipped with a charging switch for AC-DC line-up charging [Q3].

Local charging control switch

The cabinet can be equipped with a local charging control switch [S4]. Position "1" enables closing of the DC switch-disconnector [Q11].

DC switch-disconnector

The supply unit can be equipped with a DC switch-disconnector [Q11] which allows the isolation of the unit from the DC link. Before the unit is reconnected to the DC link, the capacitors of the supply module(s) must be charged through a charging circuit.

Note: If the unit consists of multiple supply module cubicles, each cubicle is equipped with a DC switch-disconnector and charging circuit. The DC switch-disconnector controls only the supply modules within that particular cubicle.

Charging switch for unit charging

Before closing the DC switch-disconnector [Q11], the user closes the charging switch for DC-DC unit charging [Q10]. After the precharging completes, the DC switch-disconnector [Q11] can be closed, and the charging switch [Q10] opened.

Note: The charging switch [Q10] must be opened before the supply unit can be started.

WARNING! Do not operate the DC switch-disconnectors under load.

WARNING! Do not operate the DC fuse disconnectors under load or under voltage.

WARNING! With frame n×R8i units, both the DC switch-disconnector [Q11] and the charging switch [Q10] must be opened in every cubicle containing supply modules to disconnect the supply unit from the DC link. In addition, the DC switch-disconnector of the AC circuit [Q40] must be opened.

DC switch-disconnector for line-up charging

The supply unit can be equipped with a DC switch-disconnector for line-up charging [Q40]. DC switch-disconnector [Q40] is needed for isolating the line-up charging circuit from the DC link when the supply unit has the DC switch disconnector [Q11] and AC-DC line-up charging circuit.

PC connection

There is a USB connector on the front of the control panel that can be used to connect a PC to the drive. When a PC is connected to the control panel, the control panel keypad is disabled.

Fieldbus control

You can control the unit through a fieldbus interface if the unit is equipped with an optional fieldbus adapter and when you have configured the control program for the fieldbus control with the parameters. For information on the parameters, see the firmware manual.

Note: To be able to switch the main circuit breaker [Q1] and the supply unit on and off (Run enable signal) through the fieldbus, the Run enable command at digital input DI2 must be on (1).

Type designation labels

Each IGBT supply module has a type designation label attached to it. The type designation stated on the label contains information on the specifications and configuration of the unit.

Quote the complete type designation and serial number when contacting technical support on the subject of individual IGBT supply module.

Example label is shown below.

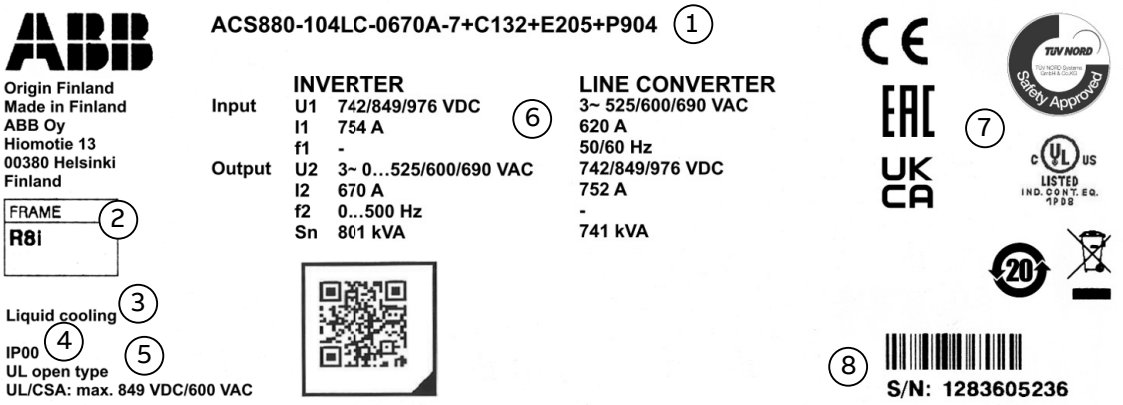

No.	Description
1	Type designation
2	Frame size
3	Cooling method
4	Degree of protection
5	UL/CSA data
6	Ratings
7	Valid markings. See ACS880 liquid-cooled multidrive cabinets and modules electrical planning (3AXD50000048634 [English].
8	Serial number. The first digit of the serial number refers to the manufacturing plant. The next four digits refer to the unit's manufacturing year and week, respectively. The remaining digits complete the serial number so that there are no two units with the same number.

Type designation key

IGBT supply module

Type designation describes the composition of the module in short. Note that in the type designation label of an IGBT supply module (ACS880-204LC), the type of the module is ACS880-104LC. The complete designation code is divided in subcodes:

- The first 1…20 digits form the basic code. It describes the basic construction of the unit. The fields in the basic code are separated by hyphens.
- The plus codes follow the basic code. Each plus code starts with an identifying letter (common for the whole product series), followed by descriptive digits. The plus codes are separated by plus signs.

The following table lists the fields of basic code ACS880-204LC-0400A-7 as an example, and the plus codes of the IGBT supply module.

CODE	DESCRIPTION
Basic codes	
ACS880	Product series
104LC	Construction: liquid-cooled IGBT supply module
Size	
0400A	Refer to section Ratings (page 302).
Voltage range	
3	Input voltage range: 380…415 V AC. This is indicated in the type designation label as typical input voltage level (3~ 400 V AC).
5	Input voltage range: 380…500 V AC. This is indicated in the type designation label as typical input voltage levels (3~ 400/480/500 V AC).
7	Input voltage range: 525…690 V. This is indicated in type designation label as typical input voltage levels (3~ 525/600/690 V AC).
Plus codes	
For the plus codes, see chapter Ordering information.	
E205	Frames 2×R7i…4×R7i: Internal du/dt filters Frame R8i: Internal du/dt filters (When the module is used as an IGBT supply module, it must always be ordered with +E205.)

LCL filter

CODE	DESCRIPTION
Basic codes	
BLCL	LCL filter for frame R7i or R8i IGBT supply module
Size	
13LC, 14LC, 15LC, 24LC or 25LC	Refer to chapter Technical data.
Voltage range	
5	Voltage rating: 380…500 V AC. This is indicated in the type designation label as typical input voltage levels (3~ 400/480/500 V AC).
7	Voltage rating: 525…690 V. This is indicated in type designation label as typical input voltage levels (3~ 525/600/690 V AC, 600 UL, CSA).

Weak supply networks

In weak supply networks with a short-circuit ratio less than 8, ABB recommends to equip the supply unit with a BAMU auxiliary measurement unit. Without the BAMU, there is a risk of nuisance DC overvoltage trippings due to disturbances caused by high-voltage THD in the supply voltage. Short-circuit ratio is defined as the supply network's apparent short-circuit power $S_{k,net}$ divided by the drive's nominal apparent power S_n:

$SCR_{net} = S_{k,net} / S_n$, where

- SCR_{net} = short-circuit ratio of the supply network
- $S_{k,net}$ = supply network's apparent short-circuit power
- S_n = nominal apparent power of the drive.

If a generator is used as a supply: The recommendation for ACS880 IGBT supply unit with generator supply is:

- always use a BAMU auxiliary measurement unit
- short-circuit ratio of the supply network $SCR_{net} > 3$
- short-circuit ratio of the generator $SCR_{gen} = 1/xk > 2$, where
  - xk = relative short-circuit reactance
- generator nominal power $P_{gen} > 0.3 \times P_{N,ISU}$, where
  - P_{gen} = generator nominal power (output)
  - $P_{N,ISU}$ = typical power of the IGBT supply unit in no-overload use.

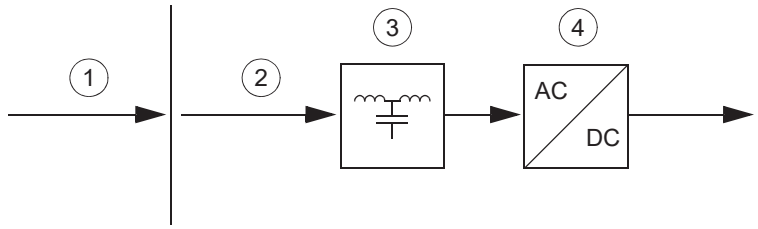

1	Generator. SCR_{gen} > 2
2	Supply network. SCR_{net} > 3
3	LCL filter
4	IGBT supply module

3

Moving and unpacking the module

Contents of this chapter

This chapter gives basic information on unpacking and moving the module.

WARNING!
Obey the safety instructions given in ACS880 liquid-cooled multidrive cabinets and modules safety instructions (3AXD50000048633 [English]).

Moving and unpacking the module

The modules are delivered on a wooden base, boxed in corrugated cardboard. The cardboard box is tied to the base with PET bands.

1. Cut off the bands.
2. Lift off the cardboard box.
3. Remove any filling material.
4. Cut open the plastic wrapping of the module.
5. Lift off the module.
6. Check that there are no signs of damage.

Dispose of or recycle the packaging according to the local regulations.

If you need to pack the modules, see the package information in the technical data.

4

Cabinet construction

Contents of this chapter

This chapter gives instructions on how to install the modules and additional equipment into a cabinet.

For general instructions, see Drive modules cabinet design and construction instructions (3AUA0000107668 [English]).

Limitation of liability

The installation must always be designed and made according to applicable local laws and regulations. ABB does not assume any liability whatsoever for any installation which breaches the local laws and/or other regulations. Furthermore, if the recommendations given by ABB are not followed, the drive may experience problems that the warranty does not cover.

- **North America**

Installations must be compliant with NFPA 70 (NEC)[1)] and/or Canadian Electrical Code (CE) along with state and local codes for your location and application.

[1)] National Fire Protection Association 70 (National Electric Code).

Switching, disconnecting and protecting solution

To arrange the switching, disconnection and protection of the ACS880-204LC module, you can use the following solutions depending on the frame size.

- **Frame R7i**

The switching, disconnecting and protecting equipment can be placed **outside** the drive cabinet in the following way:

1. The AC supply is connected to the main circuit breaker [Q1].
2. The AC fuses are connected after the breaker.
3. AC-DC charging circuit (line-up charging) for precharging the DC link capacitors is connected to the AC supply. See section Single-line circuit diagrams of the supply unit (page 21).

For the connection diagram, see chapter Electrical installation.

Frame R8i

The switching, disconnecting and protecting equipment can be placed **outside** the drive cabinet in the following way:

1. The AC supply is connected to the main circuit breaker [Q1].
2. The AC fuses are connected after the breaker.
3. AC-DC charging circuit (line-up charging) for precharging the DC link capacitors is connected to the AC supply. See section Single-line circuit diagrams of the supply unit (page 21).

For the connection diagram, see chapter Electrical installation.

Cabinet temperature supervision

You must ensure sufficient air flow inside the cabinet to cool down air-cooled components, such as fuses, busbars and filters. In liquid-cooled drive systems, the cabinet can be totally sealed from the ambient air. The air inside the cabinet must be able to circulate freely. You must install a fan inside the cabinet to push air through a heat exchanger. You must also ensure that the temperature inside the cabinet is monitored.

Frame R7i and multiples: You can use thermal switches to supervise the temperature inside the module cabinet. Install the thermal switches on the hottest element of the cabinet. In this example, the thermal switch is on the DC busbar above the DC fuses [F45.12]. ABB recommends to use thermal switch with 85 °C (185 °F) temperature limit. Make sure that components located in other cubicles are properly cooled.

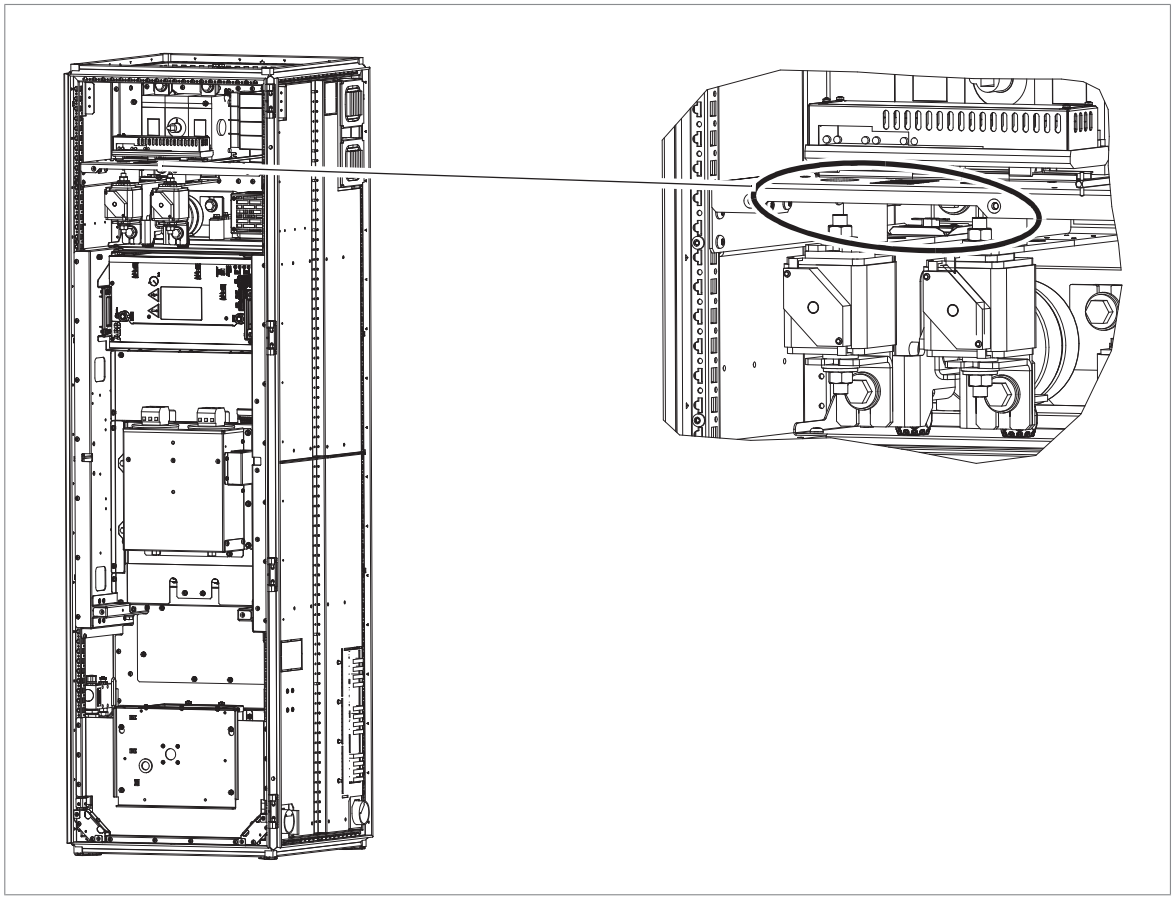

Frame R8i and multiples: You can use thermal switches [F6.10…11] to supervise the temperature inside the filter cabinet. Install the thermal switches on the hottest element of the cabinet. In this example, the thermal switches are on the DC busbar above the AC fuses [F6.10] and below the LCL filter capacitors [F6.11]. ABB recommends to use thermal switch with 110 °C (230 °F) temperature limit for the AC fuses and thermal switch with 70 °C (158 °F) temperature limit for the LCL filter capacitors. Make sure that components located in other cubicles are properly cooled.

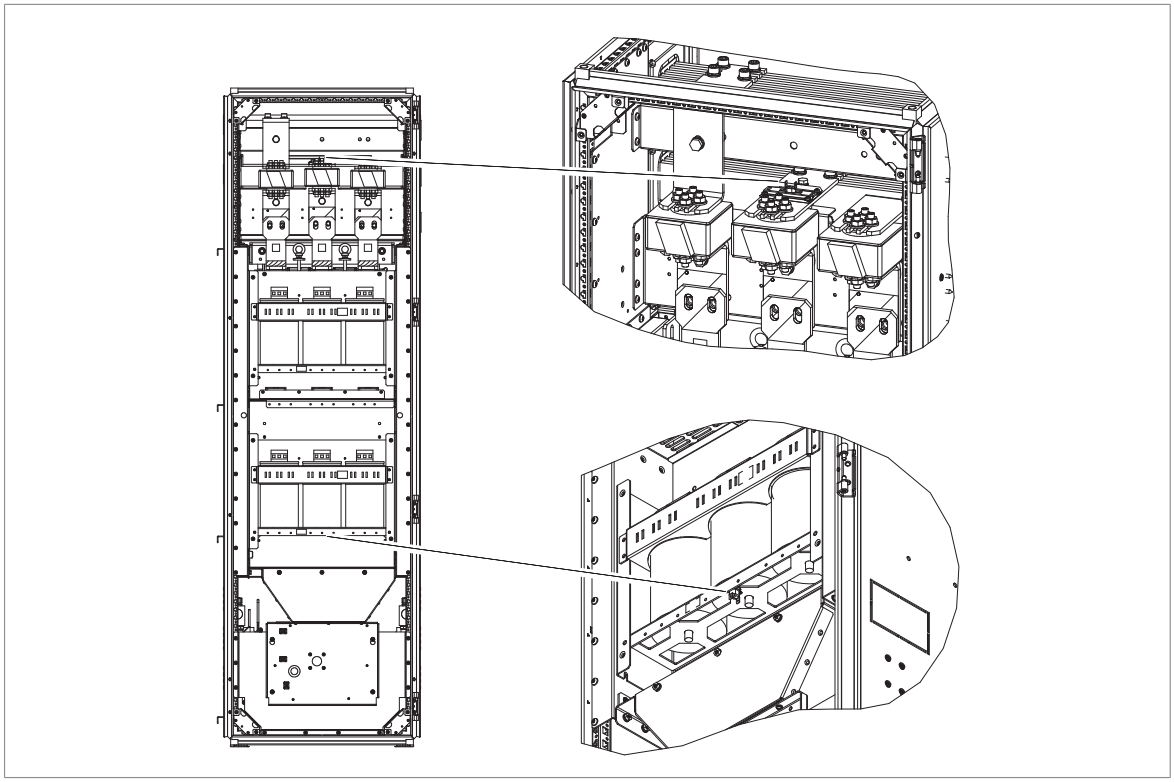

Wire the switches to a digital input (DI) of the supply control unit (1 = OK, 0 = overtemperature). In case of overtemperature, the switch opens and trips the supply unit on a fault. You can adjust the delay time by parameters. For the example wirings, see chapter Example circuit diagrams.

Note: If you install the switches on the busbars, make sure there is proper insulation between the busbars and thermal switches. The module has its own temperature supervision. Refer to the firmware manual of the supply unit.

Liquid pipe connector installation instructions

These instructions are applicable to the liquid pipe connectors that are used in ABB drives. There are two types of connectors: type A and type B. Refer to the illustrations below. When you install a connector, identify the connector type first. Obey the type-specific instructions carefully.

Reserve these materials and tools at hand:

- LOCTITE 2700 threadlocker
- Torque wrench (size depends on the connector size)
- For the type B connector: adjustable pliers

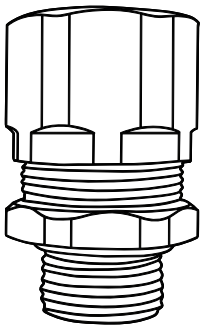

Type A

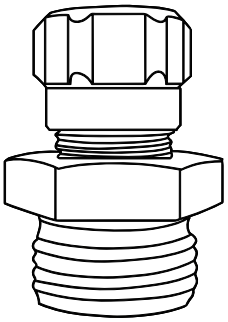

Type B

WARNING!
Do the electrical safety precautions steps before you do work on the drive. Refer to the drive safety instructions. If you are not a qualified electrical professional, do not do work on the drive. If you ignore safety instructions, injury or death, or damage to the equipment can occur.

Installation procedure:

1. If the union nut has no sealing ring (o-ring), apply the threadlocker to the threads of the union nut. Always add the threadlocker onto the outer thread. This prevents the threadlocker from entering the circuit.
2. Put the union nut carefully onto the threads and start to screw it in by hand. Tighten it to the torque specified in the table below with a torque wrench. Wipe out extra threadlocker.

Torque for type A connector	Torque for type B connector
30 N·m	20 N·m

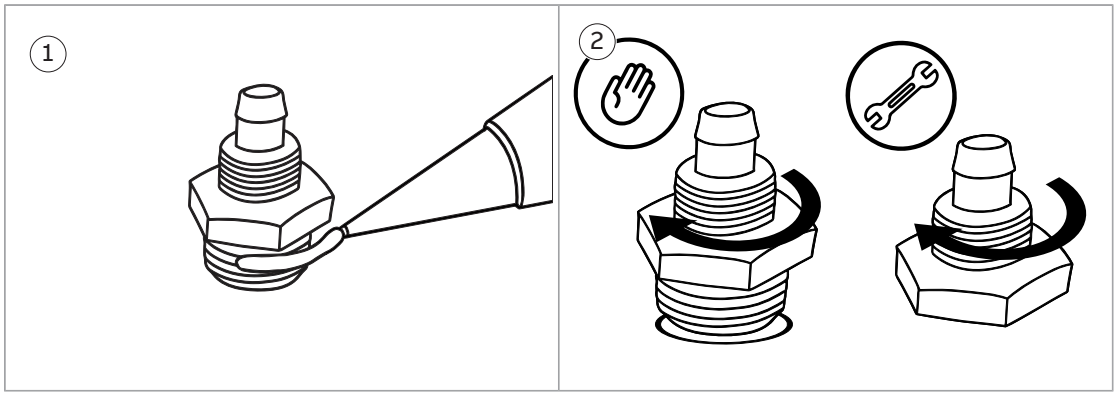

3. Push the screwing plug over the pipe, and place the pipe on the union nut.
4. Pull down the screwing plug.

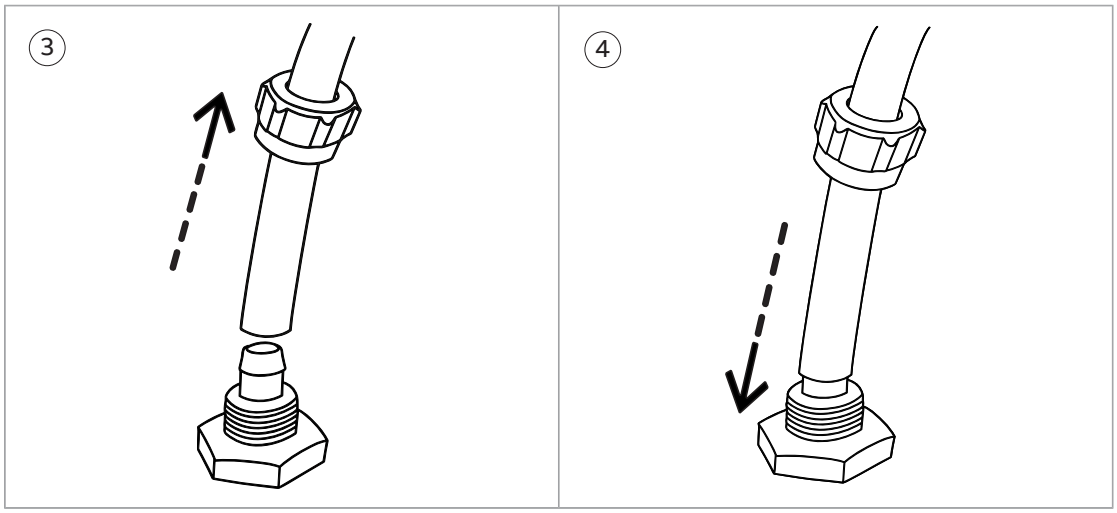

5. a) Type A connector: Start to screw the plug in by hand. Tighten the plug with a torque wrench to 20 N·m.
   b) Type B connector: Start to screw the plug in by hand. Tighten the plug with adjustable pliers. Leave 2…3 mm thread visible.

WARNING!
Do not tighten the plug of the type B connector too much. It can break the connector or pipe.

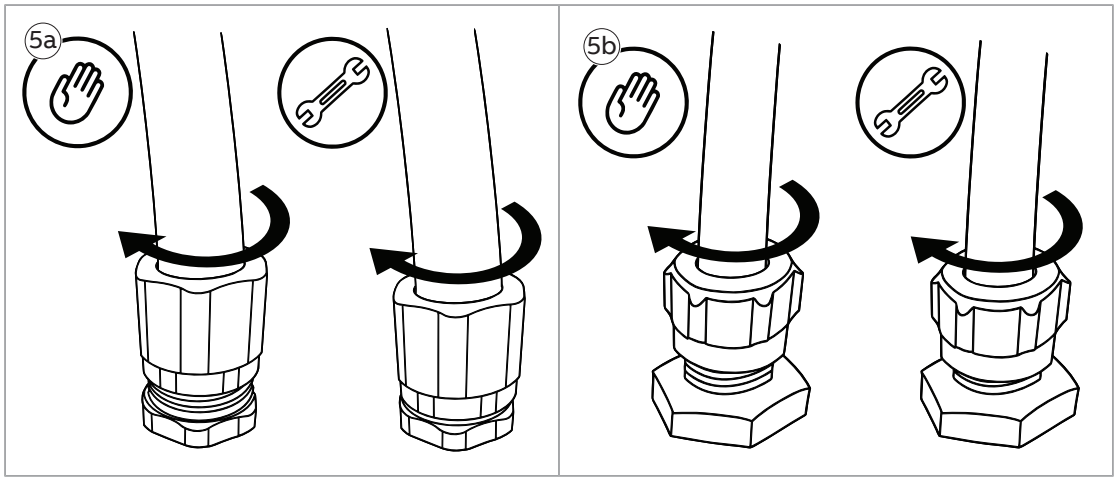
5a
5b

Installation examples

This section gives examples of how to place the drive and additional equipment into a Rittal VX25 enclosure.

Each example includes a table that lists:

- installation stages of different equipment in the order in which the installation into the enclosure should be done
- instruction code of the step-by-step instructions
- equipment kit code
- kit ordering code.

You can find the kit-specific assembly drawings, step-by-step instructions and kit information on the Internet. Go to https://sites-apps.abb.com/sites/lvacdrivesengineeringsupport/content. If needed, contact your local ABB representative.

The example includes also cabinet assembly drawings that show each stage listed in the table. More detailed steps of each stage are described in the kit-specific assembly drawings. The tightening torques are listed in the kit-specific assembly drawings. See the hardware manual for the tightening torques of drive module input and output terminals.

For general instructions, see Drive modules cabinet design and construction instructions (3AUA0000107668 [English]).

WARNING!
Remove the code labels attached to mechanical parts such as busbars, shrouds and sheet metal parts before installation. They may cause bad electrical connections, or, after peeling off and collecting dust in time, cause arcing or block the cooling air flow.

■ One R7i module and BLCL-13LC-7 or BLCL-14LC-5 LCL filter in a 600 mm wide Rittal VX25 enclosure

Layout drawing

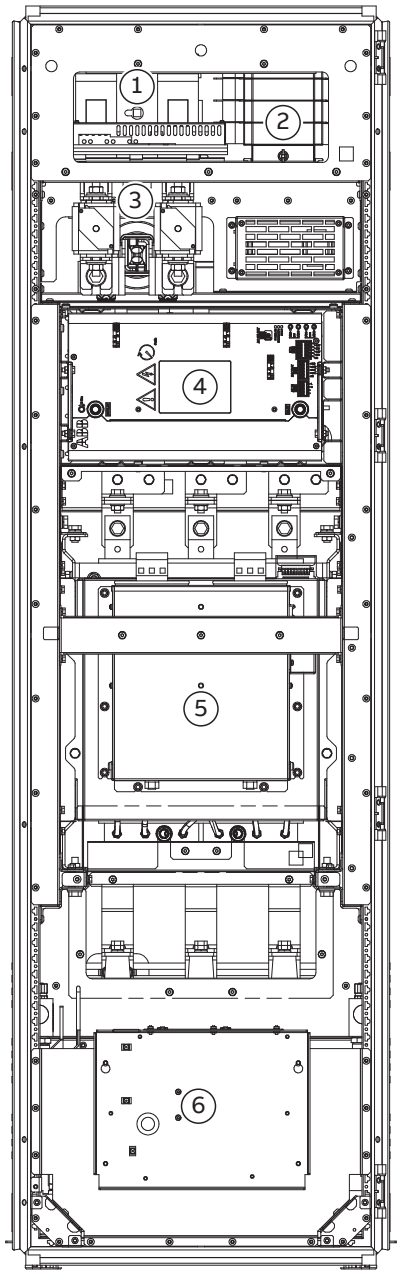

No.	Description
1	DC switch
2	Charging circuit disconnector
3	DC fuses
4	IGBT supply module of frame size R7i (on its side)
5	LCL filter
6	Fan

Pipe routing example

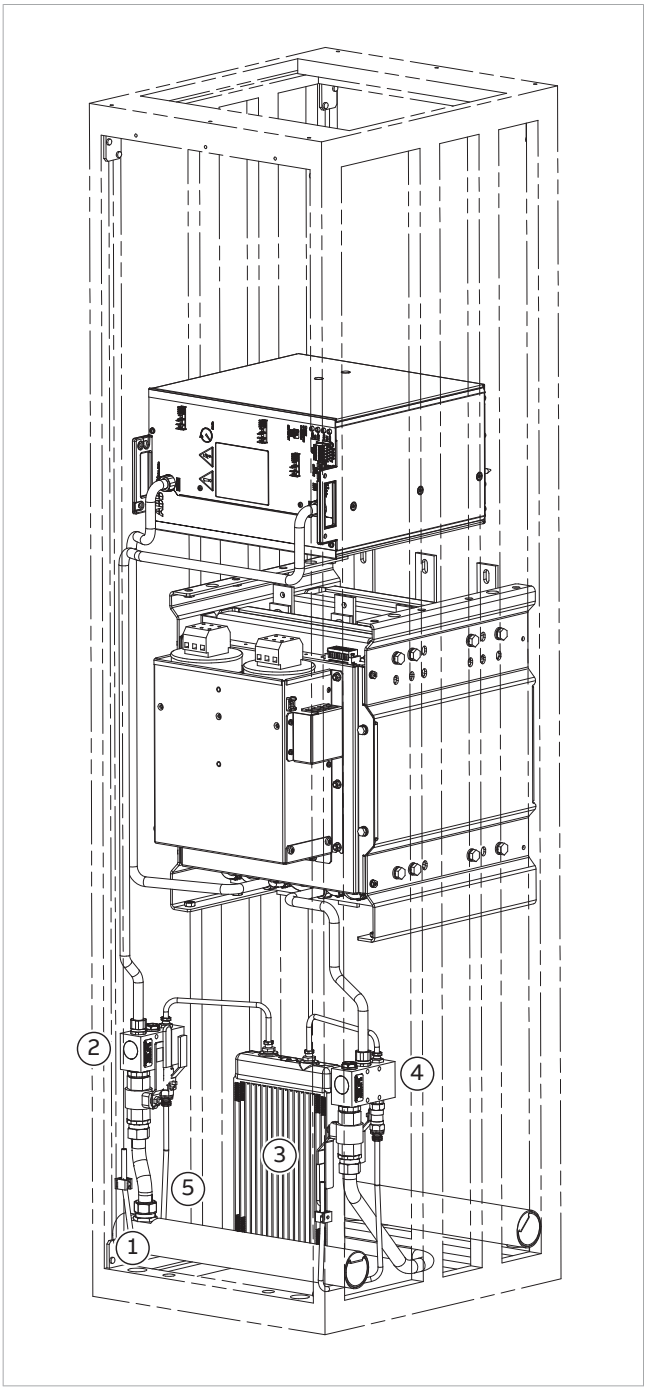

No.	Description
1	Coolant in
2	Inlet manifold with stop and drain valves
3	Heat exchanger
4	Outlet manifold with stop and drain valves
5	Coolant out

Thicker pipe is of type 16/13 and thinner pipe of type 8/6.

Installation stages

No.	Installation stage	Instruction code	Kit code	Kit ordering code
1	Common parts, DC bus	3AXD50000333639	A-468-X-001-VX	3AXD50000333387
2	Side plates kit and common AC input bus	3AXD50000327591	L-468-8-020-VX	3AXD50000360543
		3AXD50000370870	L-6-X-012-VX	3AXD50000371013
3	LCL filter related parts	3AXD50001012540	L-6-7-114-VX	3AXD50001013516
		3AXD50001012816	L-6-7-037-VX	3AXD50001013523
4	LCL connection busbars, LCL filter	3AXD50001013387	L-6-7-115-VX	3AXD50001013530
		-	BLCL-13LC-7 / BLCL-14LC-5	-
5	Module installation frame and common mode busbars	3AXD50001034382	L-6-7-038-VX	3AXD50001013547
		3AXD50001048426	L-6-7-275-VX	3AXD50001013554
6A	DC connection busbars and DC mechanics kit (fuse only)	3AXD5000105933	L-6-7-220-VX	3AXD50001013615
		3AXD5000105975	L-6-7-279-VX	3AXD50001058944
6B	DC switch mechanics kit and DC connection busbars	3AXD50001050757	For OT600 (kit 2): L-6-7-277-VX	3AXD50001013578
		3AXD50001061142	For OT400 (kit 1): L-6-7-218-VX	3AXD50001013592
		3AXD50001060497	For OT600 (kit 2): L-6-7-219-VX	3AXD50001013608
		3AXD50001050245	For OT400 (kit 1): L-6-7-276-VX	3AXD50001013561
7	Cooling related parts	3AXD50000048217	L-468-8-441	3AXD50000044084
		-	L-6-8-405	3AXD50000344970
		-	L-468-8-446	3AXD50000479795
		3AXD50001061906	L-6-7-446-VX	3AXD50001013622
		3AXD50001062439	L-6-7-447-VX	3AXD50001013639
8	Module installation	-	-	-
9	Module marine supports, shrouds and air guides	3AXD50001062552	L-6-7-504-VX	3AXD50001013646
		3AXD50001062668	L-6-7-353-VX	3AXD50001013653
10	Enclosure panels and pressure relief		L-68-X-461-VX	3AXD50000667277

Overview of kits

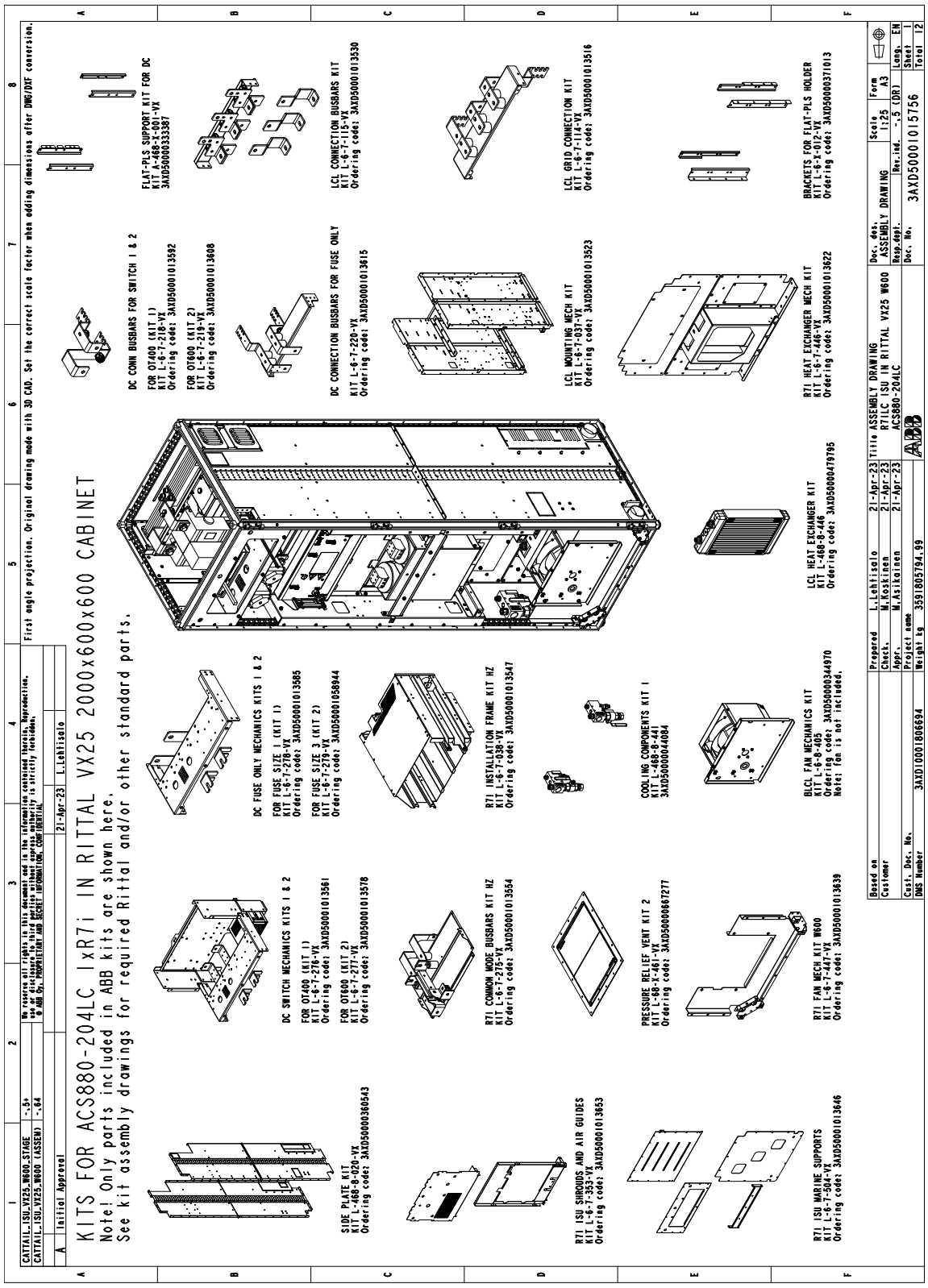

Stage 1: Installation of common parts

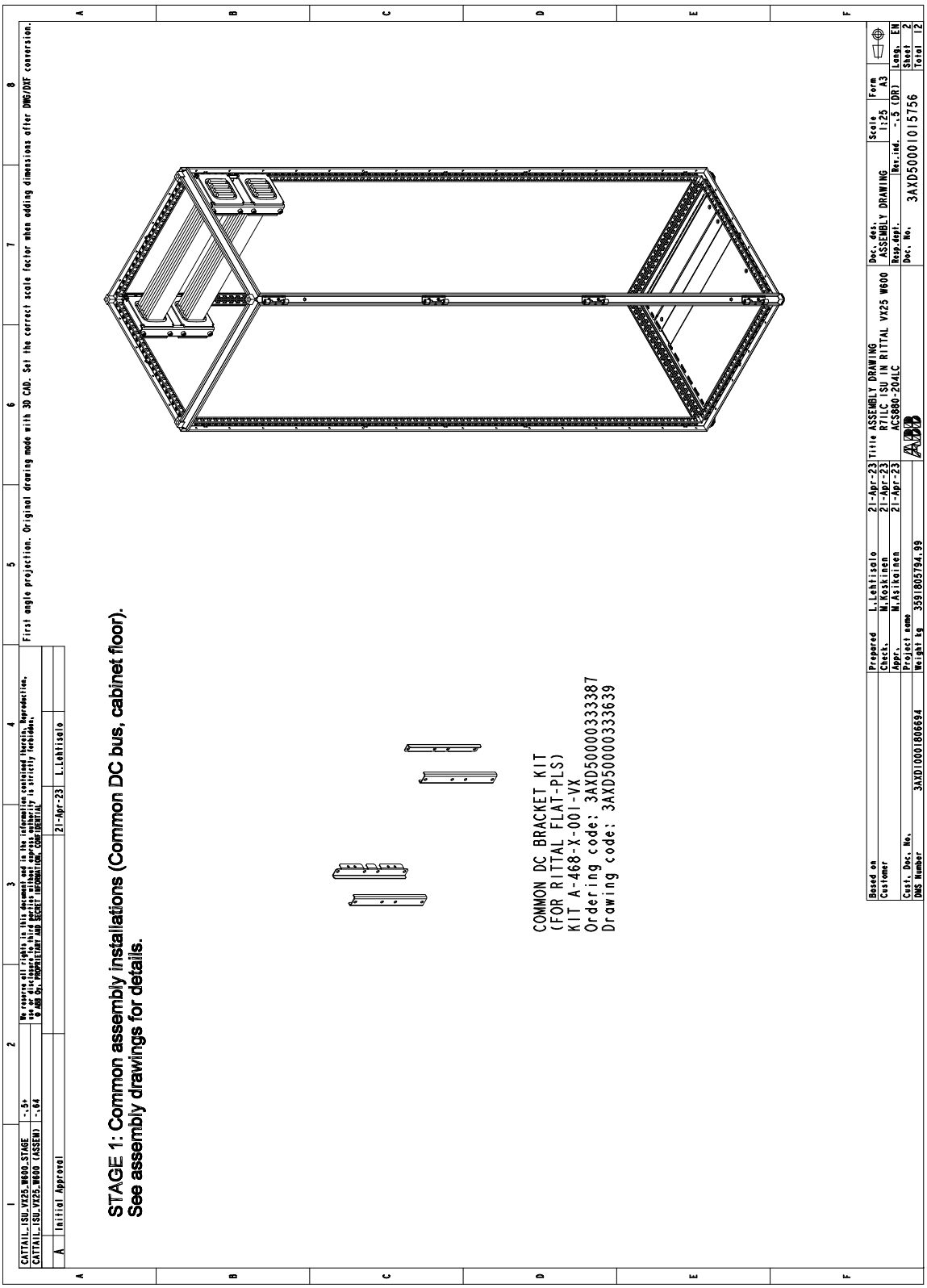

Stage 2: Side plates kit and common AC input bus installation

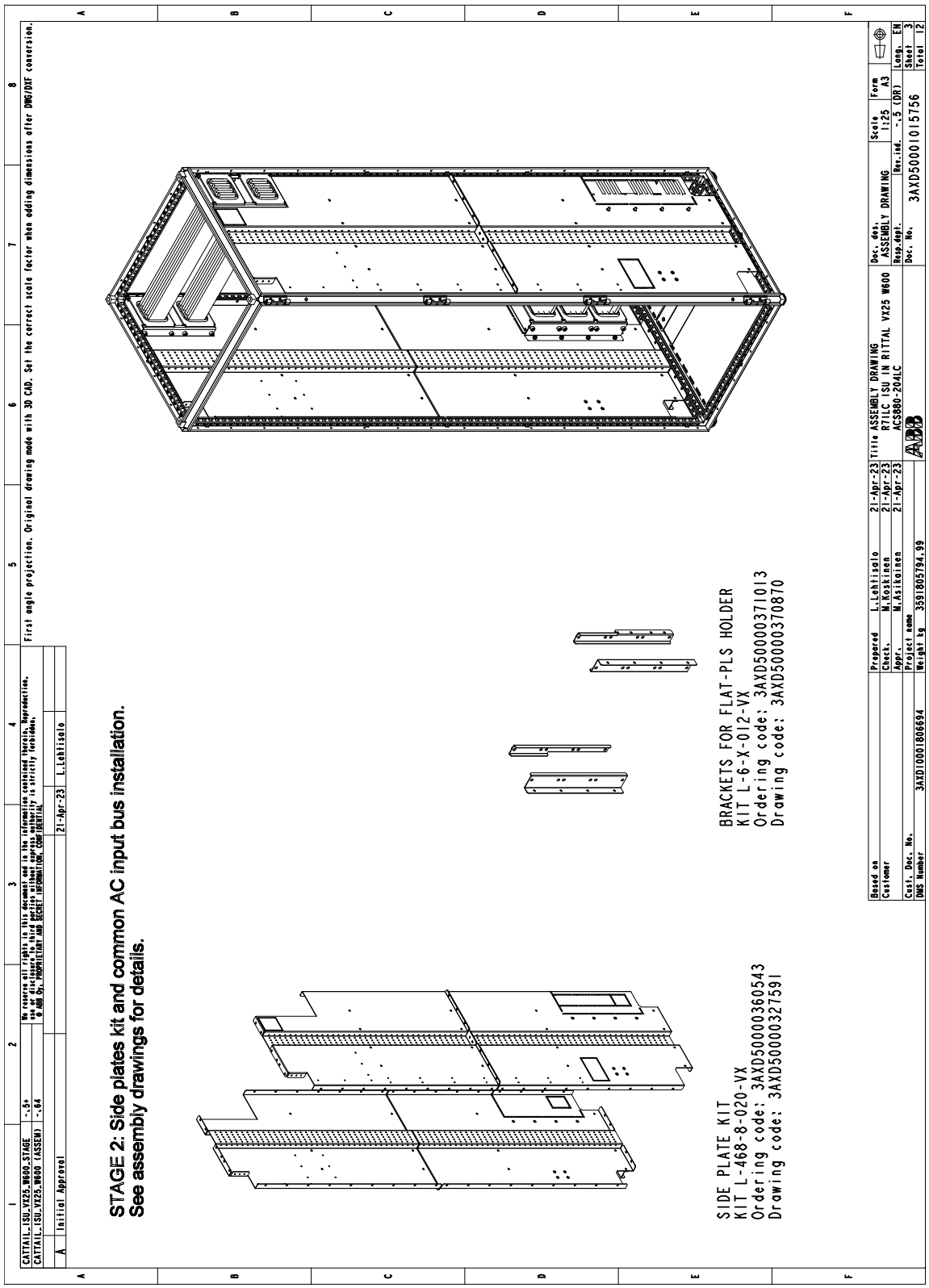

Stage 3: Installation of LCL filter related parts

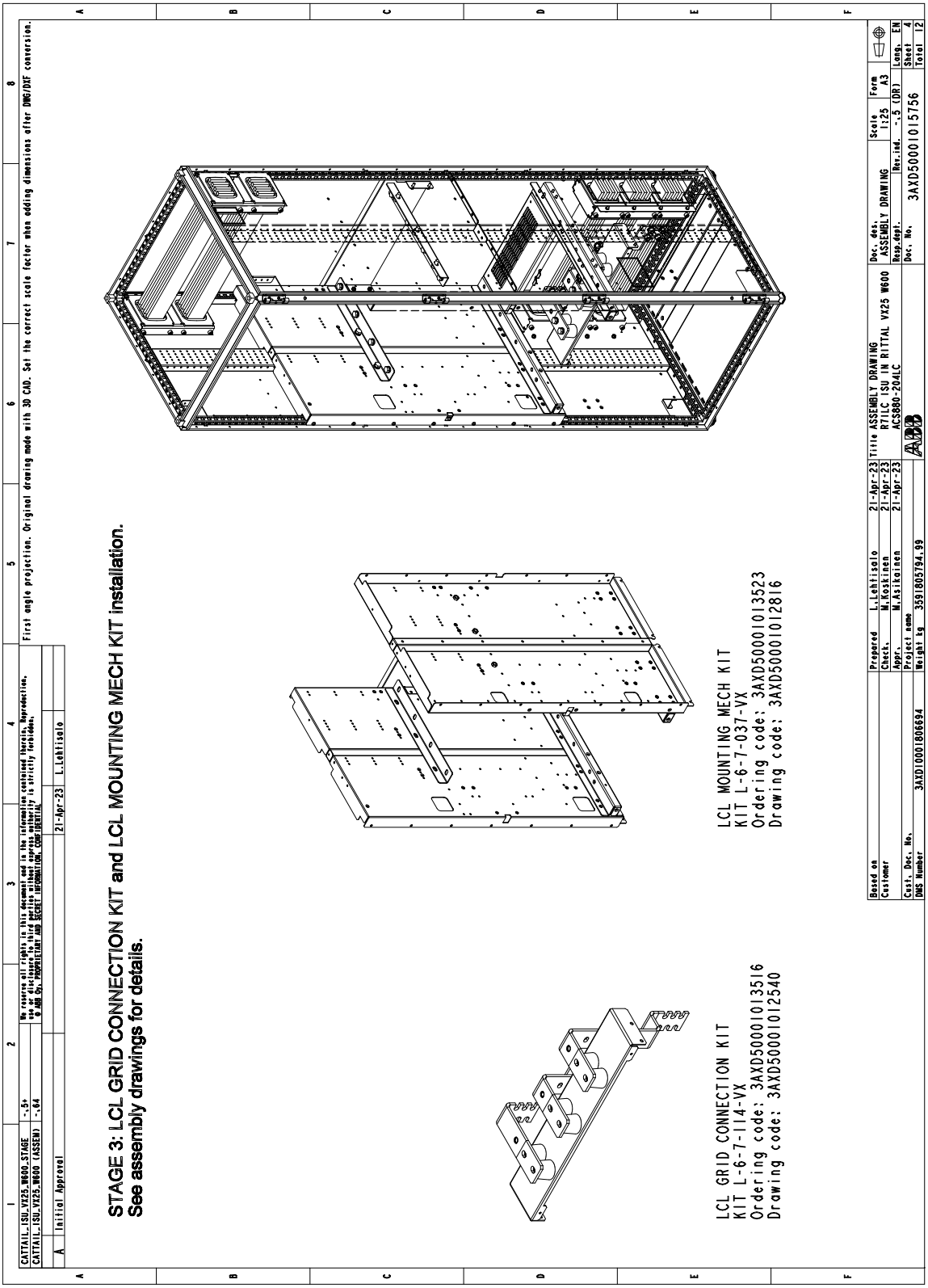

Stage 4: LCL filter installation

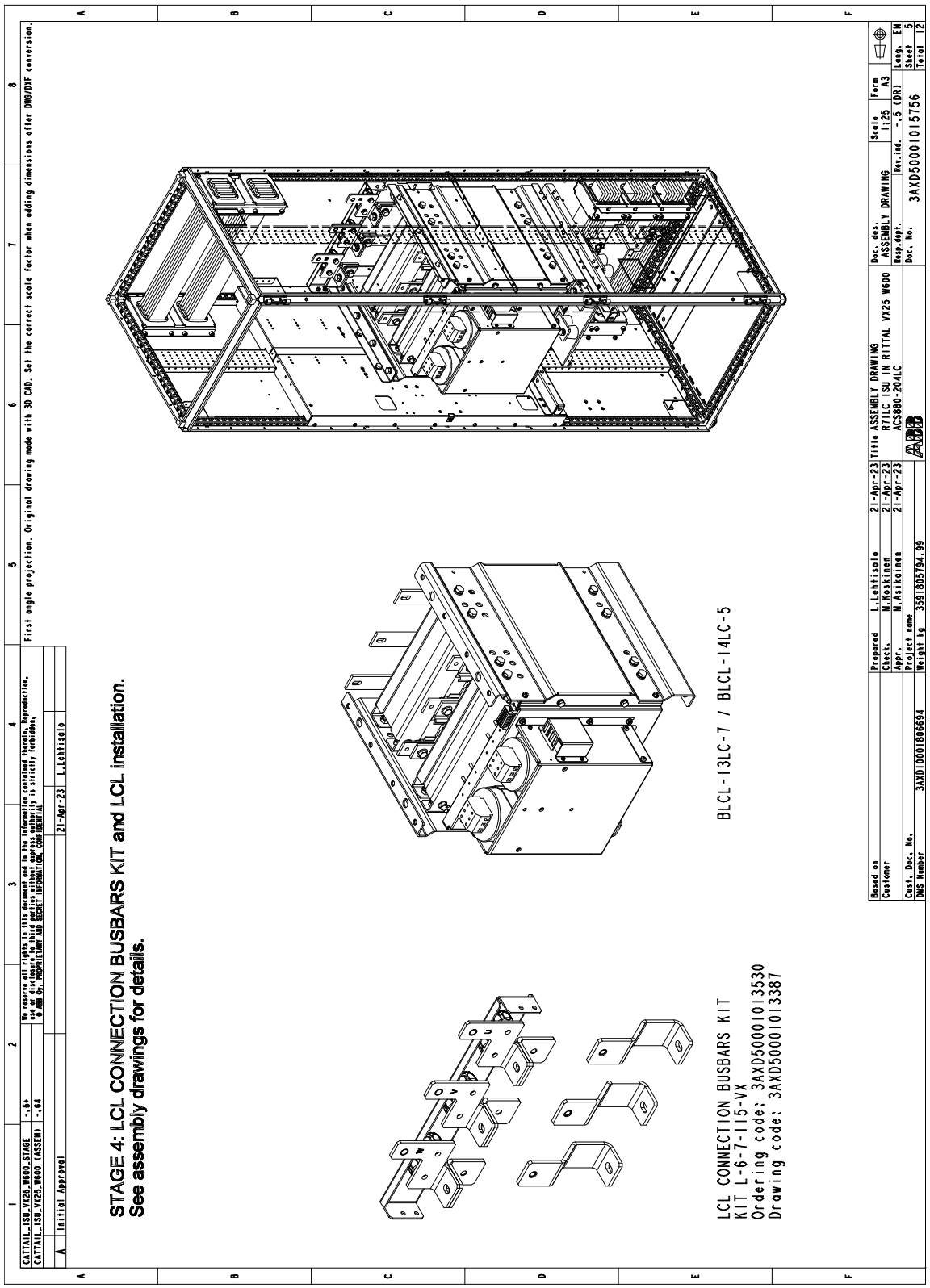

Stage 5: Installation of module installation frame and common mode busbars

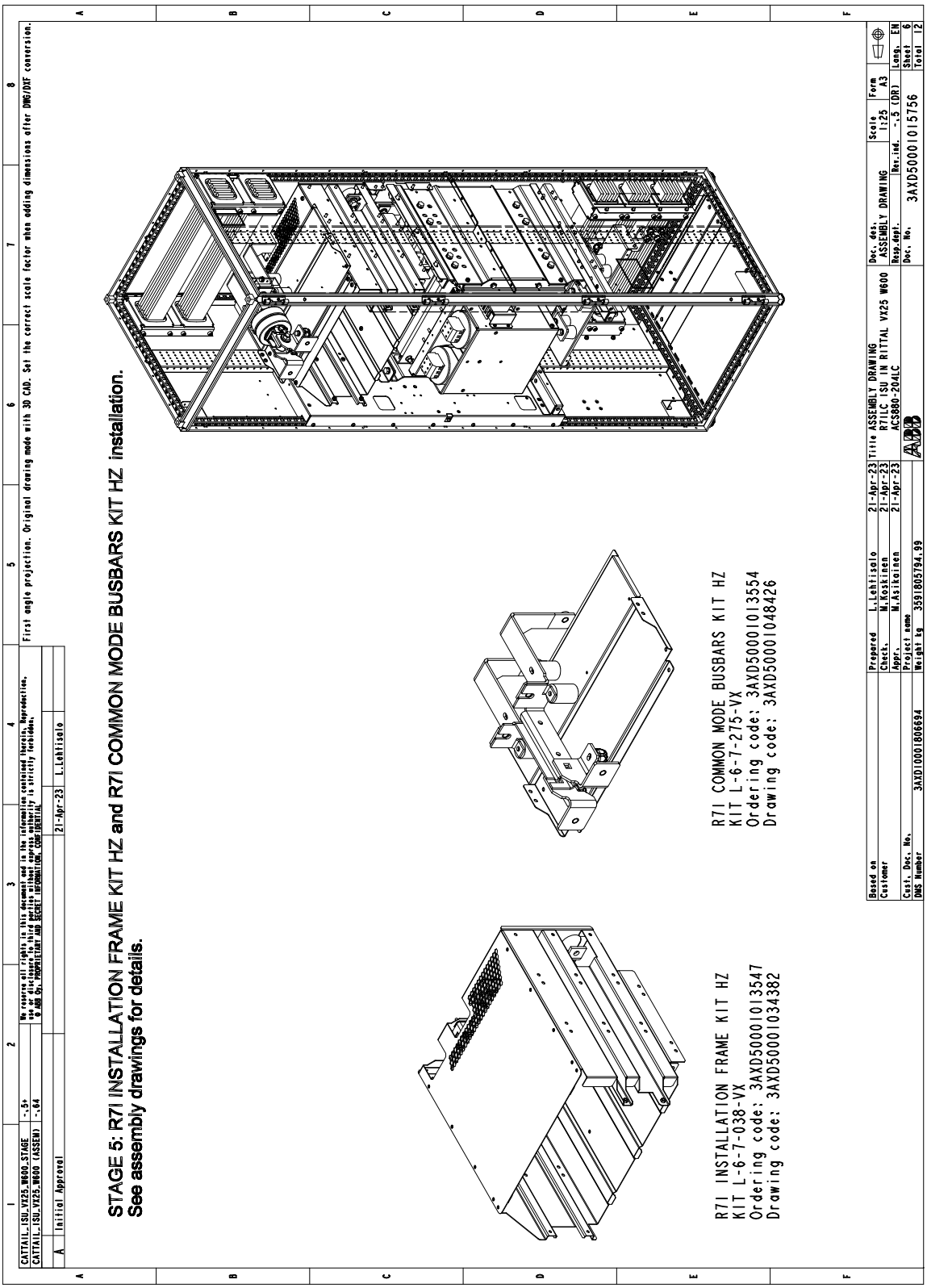

Stage 6A: DC connection busbars and DC mechanics kit (fuse only) installation

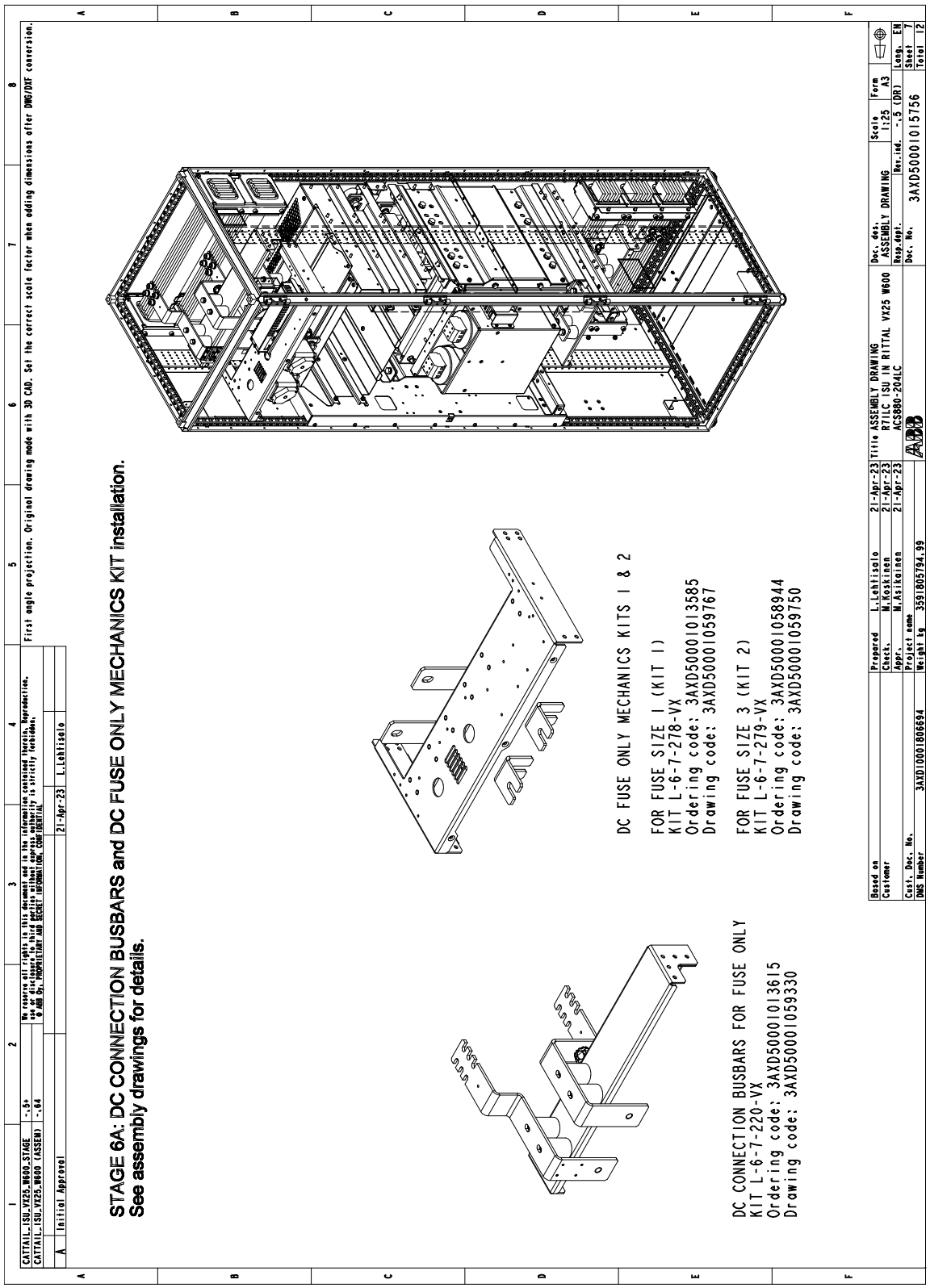

Stage 6B: DC switch mechanics kit and DC connection busbars installation

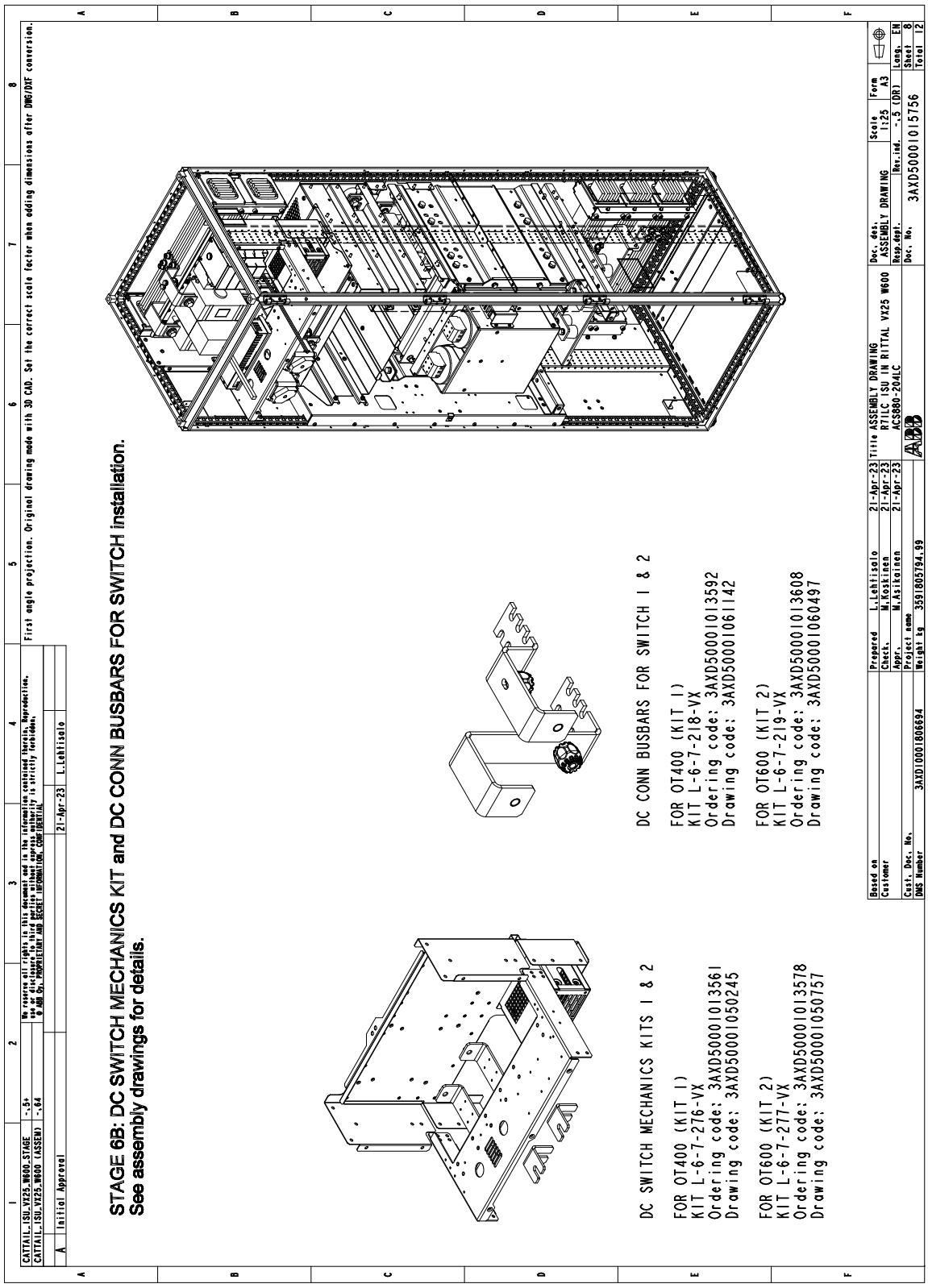

Stage 7: Installation of cooling related parts

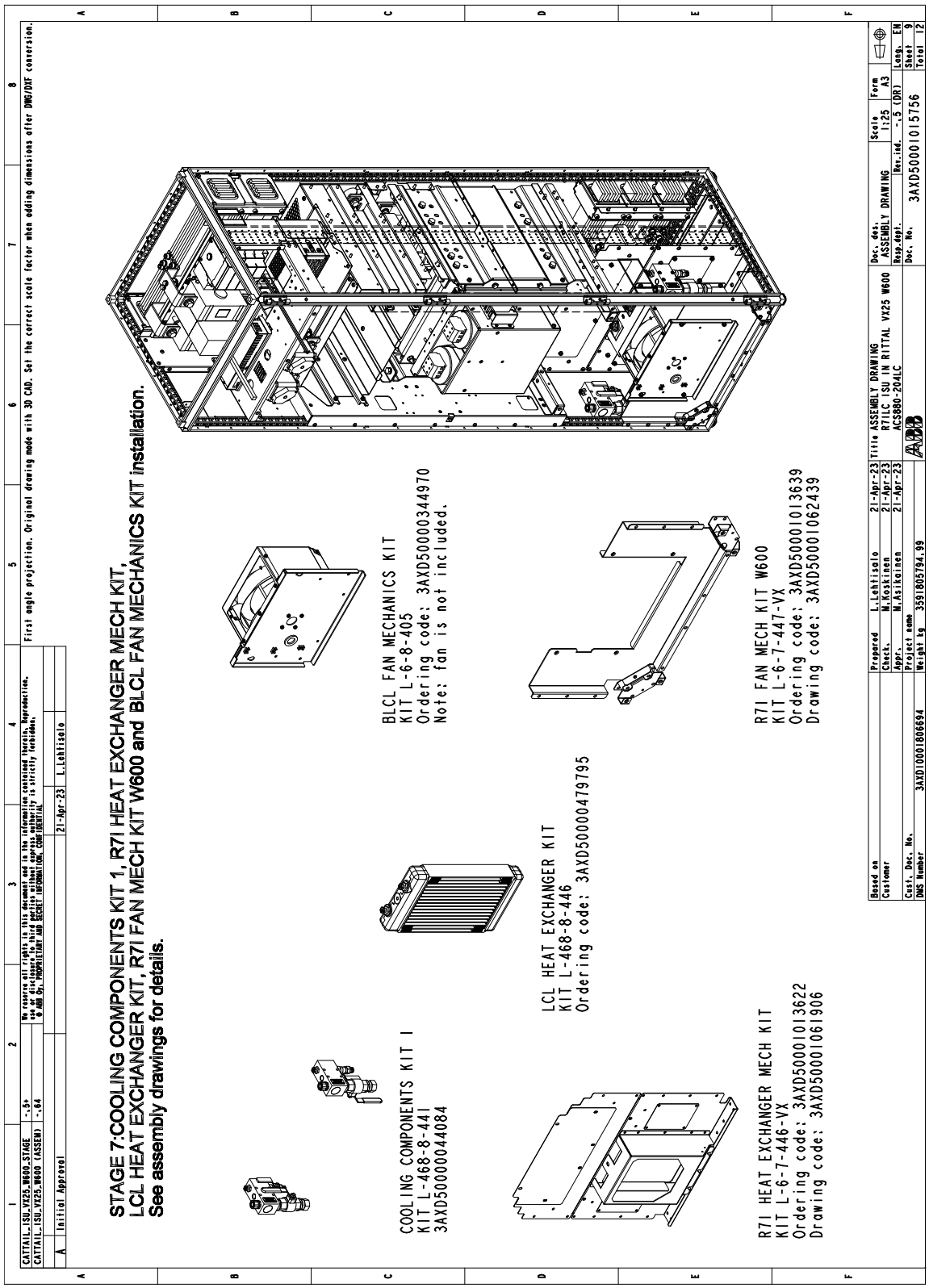

Stage 8: Module installation

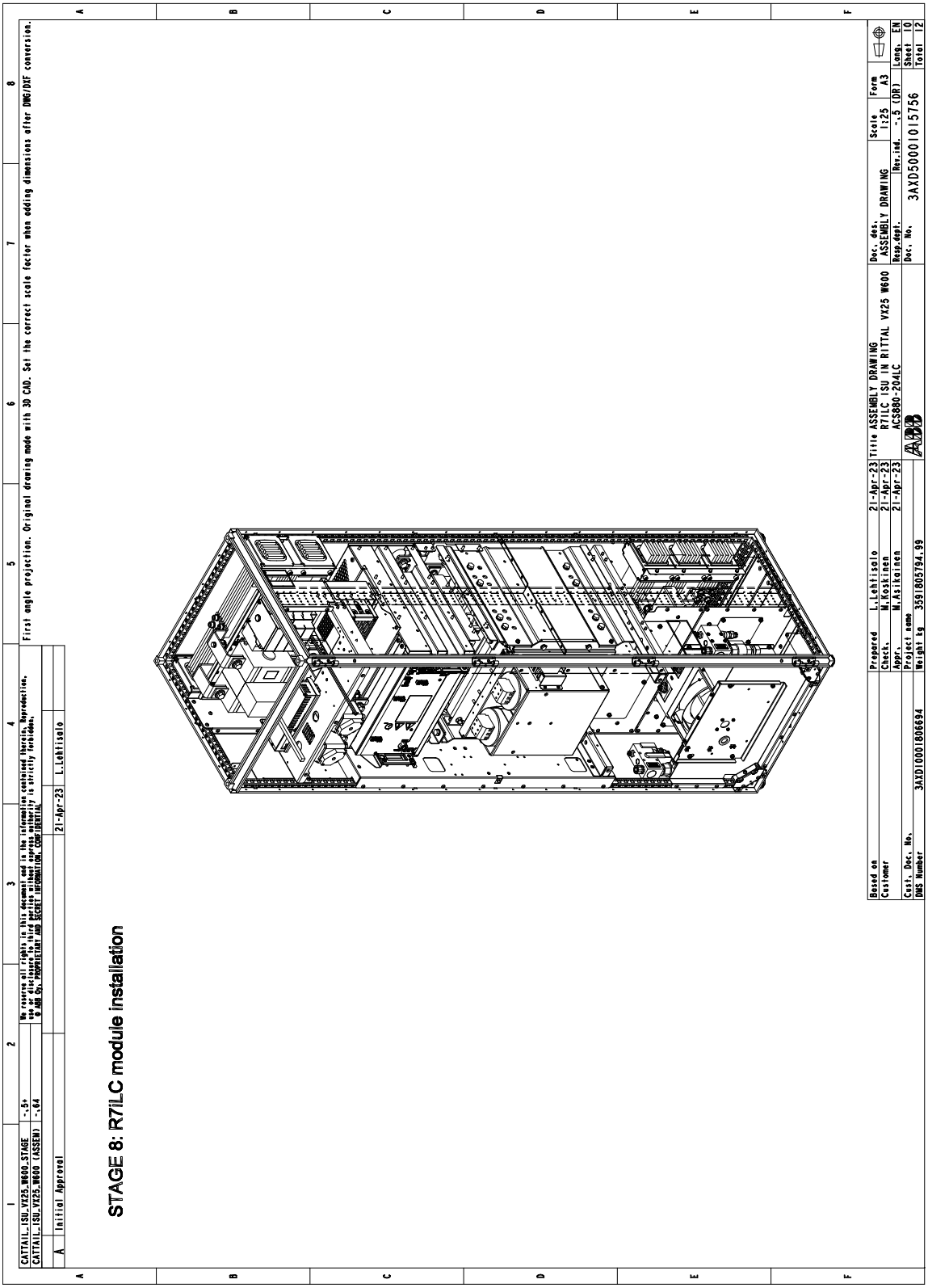

Stage 9: Installation of module marine supports, shrouds and air guides

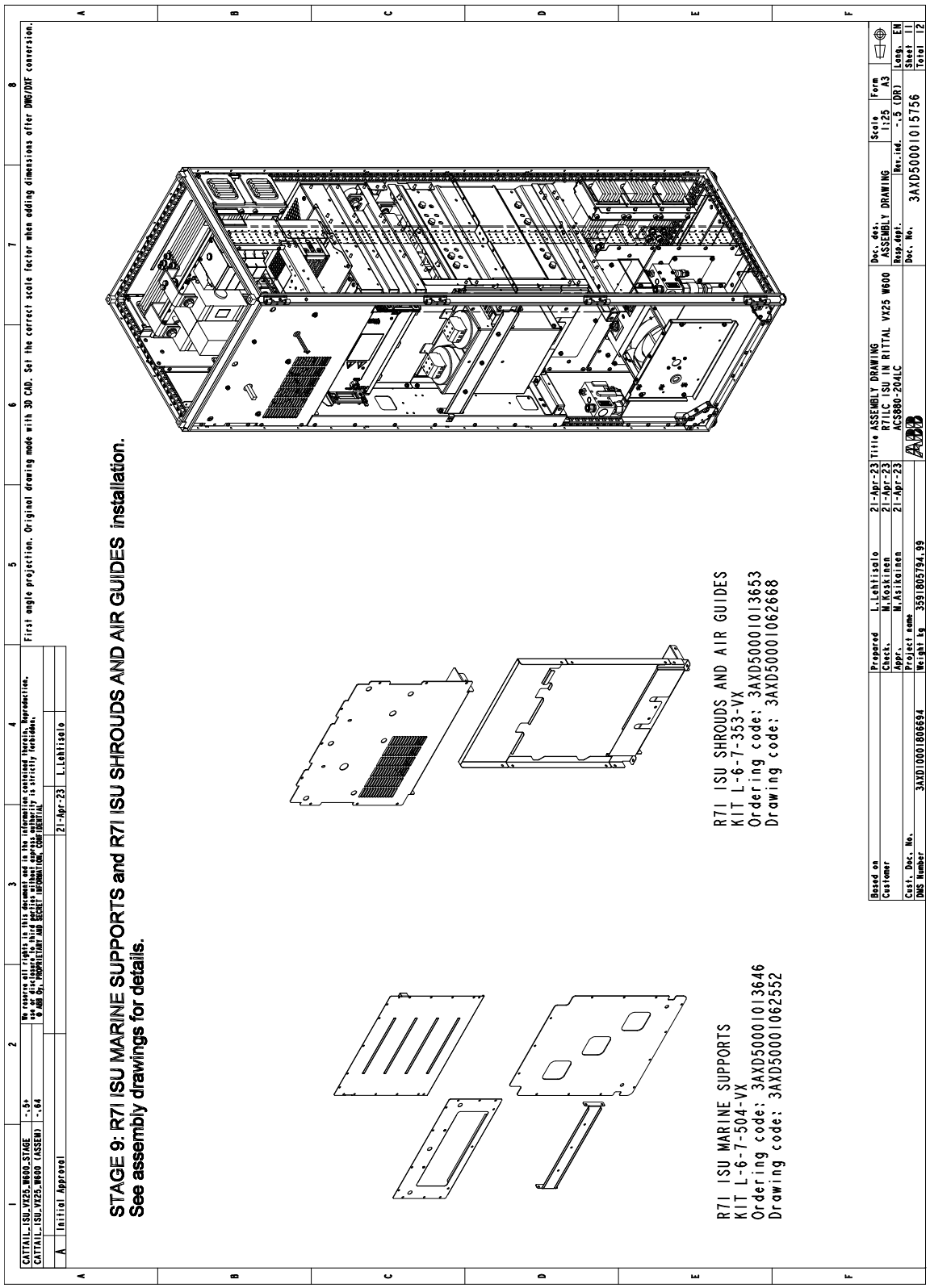

Stage 10: Installation of enclosure panels and pressure relief

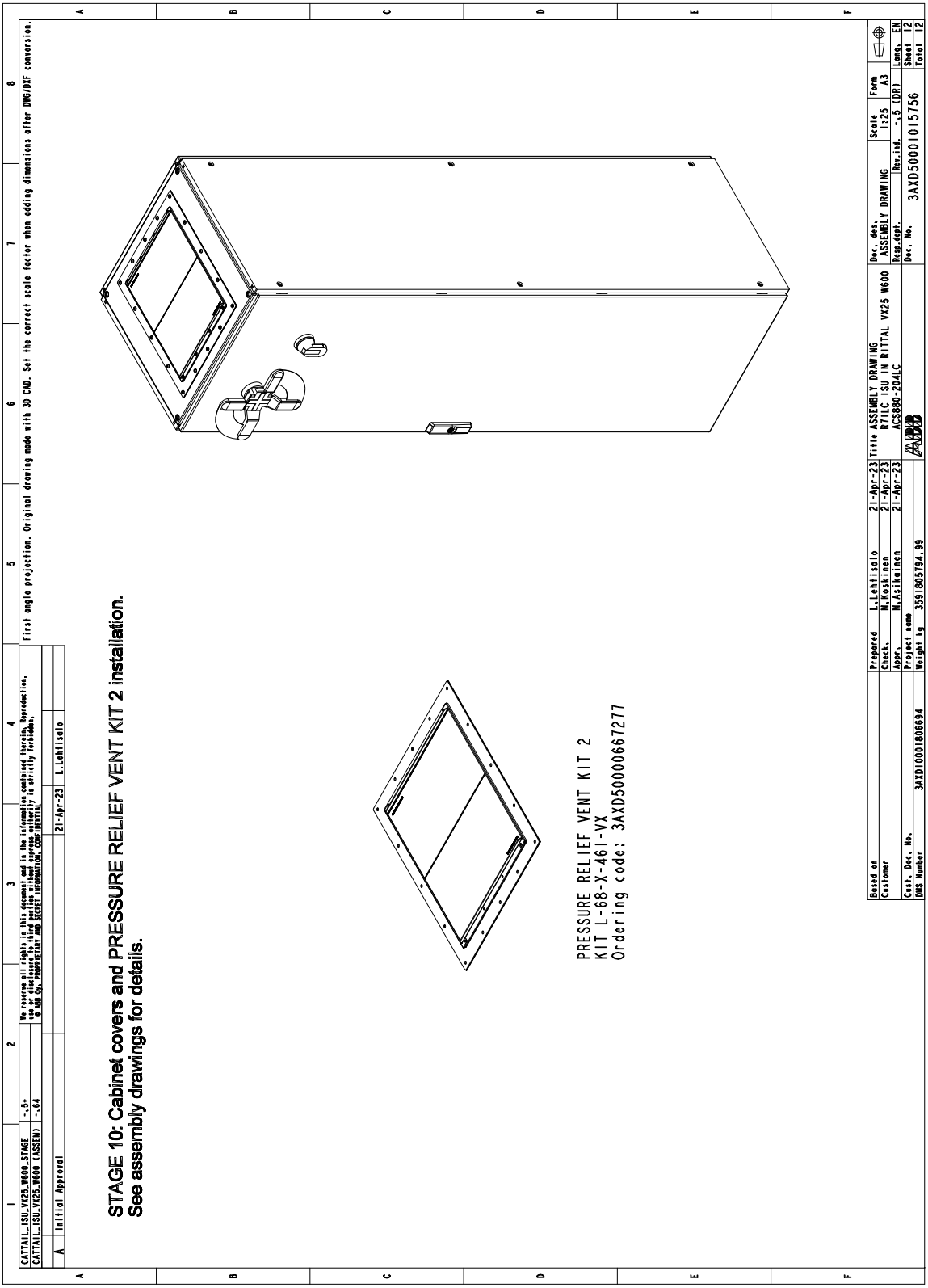

BLCL-15LC-7 / BLCL-24LC-7 in a 600 mm wide Rittal VX25 enclosure

Layout drawing

Below is an example layout of an LCL filter.

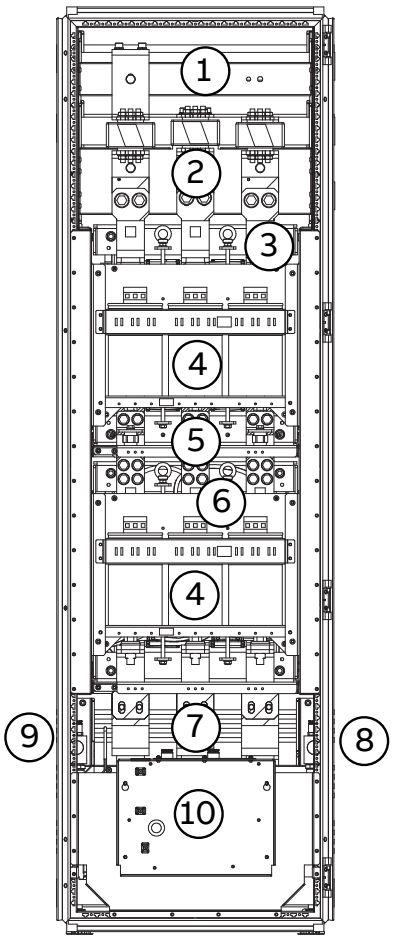

No.	Description
1	AC connection from incoming cabinet (Rittal Flat-PLS)
2	AC fuses
3	Grid-side choke (behind the capacitors)
4	Capacitors (amount varies depending on the LCL filter size)
5	Connection to capacitors by cables
6	Converter-side choke (behind the capacitors)
7	AC connection to IGBT supply unit (Rittal Flat-PLS)
8	Outlet manifold with stop and drain valves
9	Inlet manifold with stop and drain valves
10	Cooling fan and heat exchanger

Pipe routing example (BLCL-15LC-7)

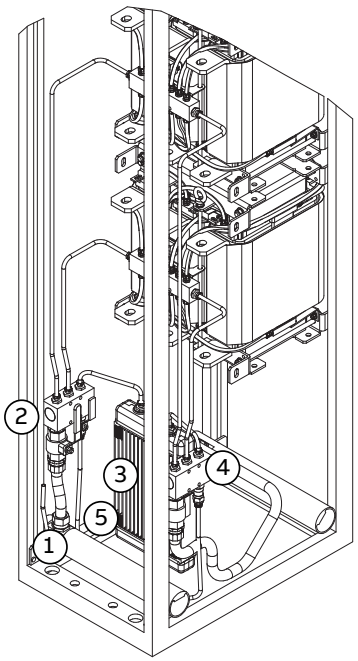

No.	Description
1	Coolant in
2	Inlet manifold with stop and drain valves
3	Heat exchanger
4	Outlet manifold with stop and drain valves
5	Coolant out

Thicker pipe is of type 16/13 and thinner pipe of type 8/6.

Pipe routing example (BLCL-24LC-7 and BLCL-25LC-7)

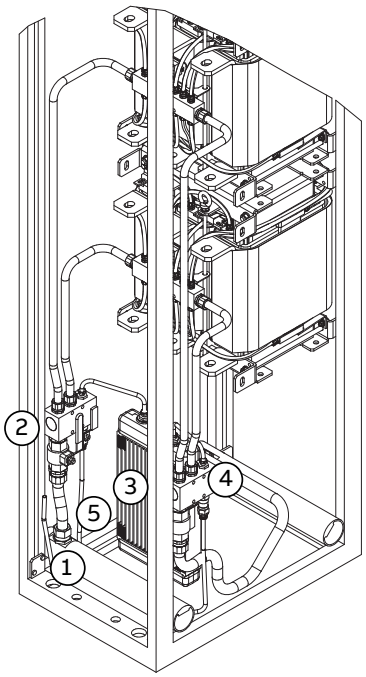

No.	Description
1	Coolant in
2	Inlet manifold with stop and drain valves
3	Heat exchanger
4	Outlet manifold with stop and drain valves
5	Coolant out

Installation stages

No.	Installation stage	Instruction code	Kit code	Kit ordering code
1	Cabinet floor	-	-	-
	Common DC bus	3AXD50000333639	A-468-X-001-VX	3AXD50000333387
	Marine support kit	-	L-6-8-500-VX	3AXD50000457885
2	LCL side plates and common AC bus	3AXD50000429653	L-468-8-314-VX	3AXD50000426652
		3AXD50000245987	L-6-X-012	3AXD50000237371
3	Brackets for Flat-PLS holder installation	3AXD50000370870	L-6-X-012-VX	3AXD50000371013
4A	BLCL-15LC-7: AC connection and fuse busbars	3AXD50000248476	L-6-8-108	3AXD50000237470
		3AXD50000431601	L-6-8-103-VX	3AXD50000426669
4B	BLCL-24LC-7: AC connection and fuse busbars	3AXD50000249206	L-6-8-109	3AXD50000237470
		3AXD50000431403	L-6-8-104-VX	3AXD50000426676
5	LCL choke mounting mechanics and LCL ISU connection	3AXD50000431915	L-6-8-306-VX	3AXD50000426195
		3AXD50000431717	L-6-8-101-VX	3AXD50000426690
6	LCL choke and LCL choke busbar installation	3AXD50000247097	L-6-8-106	3AXD50000237418
		3AXD50000249893	L-6-8-311	3AXD50000237517
		-	BLCL-15LC-7 chokes or BLCL-24LC-7 chokes	-
7	Heat exchanger, heat exchanger mechanics and cooling components installation	3AXD50000479498 3AXD50000479634	BLCL-15LC-7: L-468-8-444 BLCL-24LC-7: L-468-8-445	3AXD50000479771 3AXD50000479788
		3AXD50000431588	L-6-8-029-VX	3AXD50000426621
		-	L-468-8-446	3AXD50000479795
8A	BLCL-15LC-7: LCL capacitor support, fan support mechanics and fan installation	-	L-6-8-405	3AXD50000344970
		3AXD50000431397	L-6-8-028-VX	3AXD50000426614
		3AXD50000244065	L-6-8-308	3AXD50000237319
8B	BLCL-24LC-7: LCL capacitor support, fan support mechanics and fan installation	-	L-6-8-405	3AXD50000344970
		3AXD50000431397	L-6-8-028-VX	3AXD50000426614
		3AXD50000244065	L-6-8-309	3AXD50000237333
9	LCL shroud kit installation	3AXD50000431632	A-6-8-027-VX	3AXD50000426638

Overview of kits

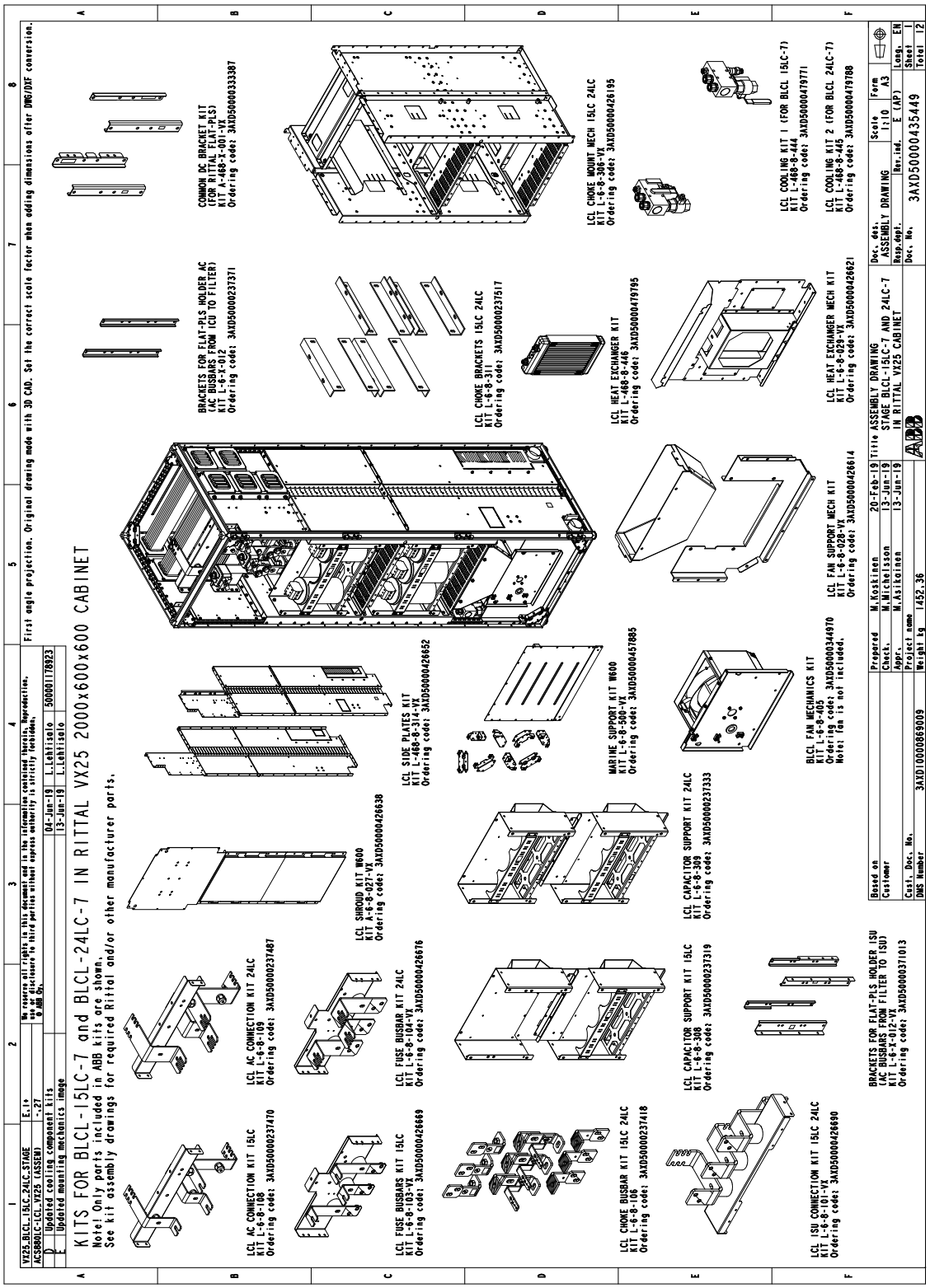

Stage 1: Installation of common parts

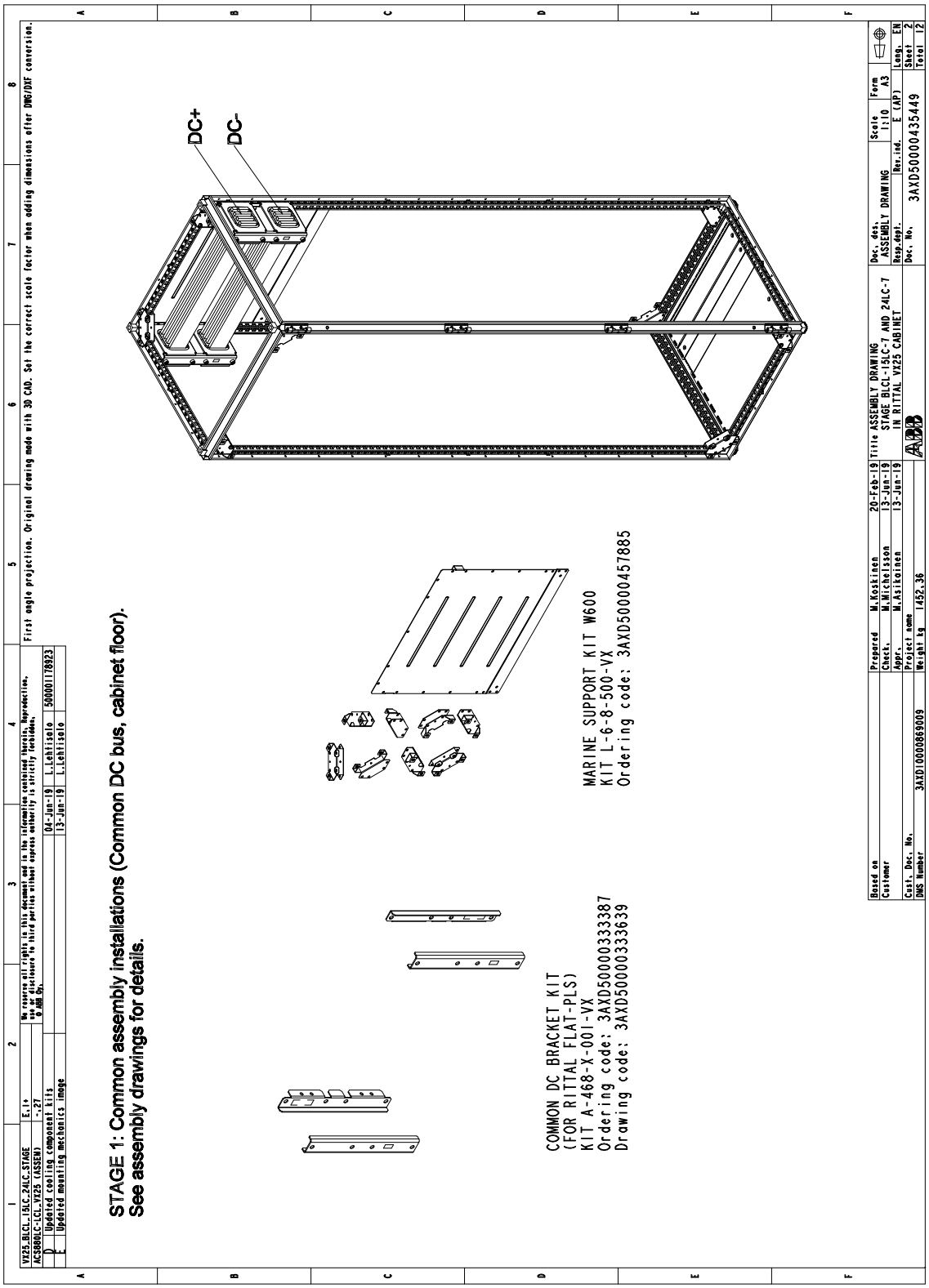

Stage 2: Installation of LCL side plates and common AC bus

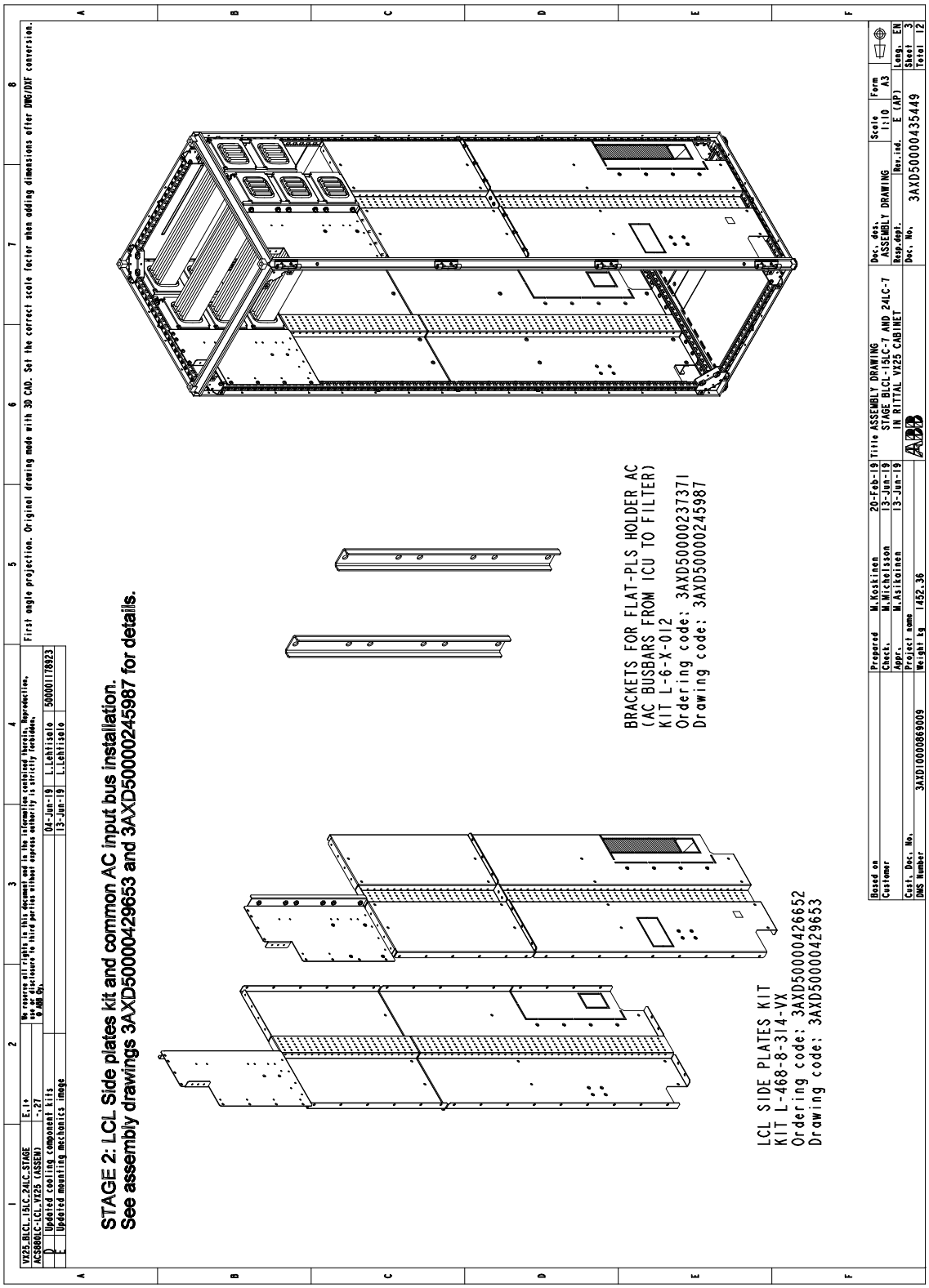

Stage 3: Installation of brackets for Flat-PLS holder

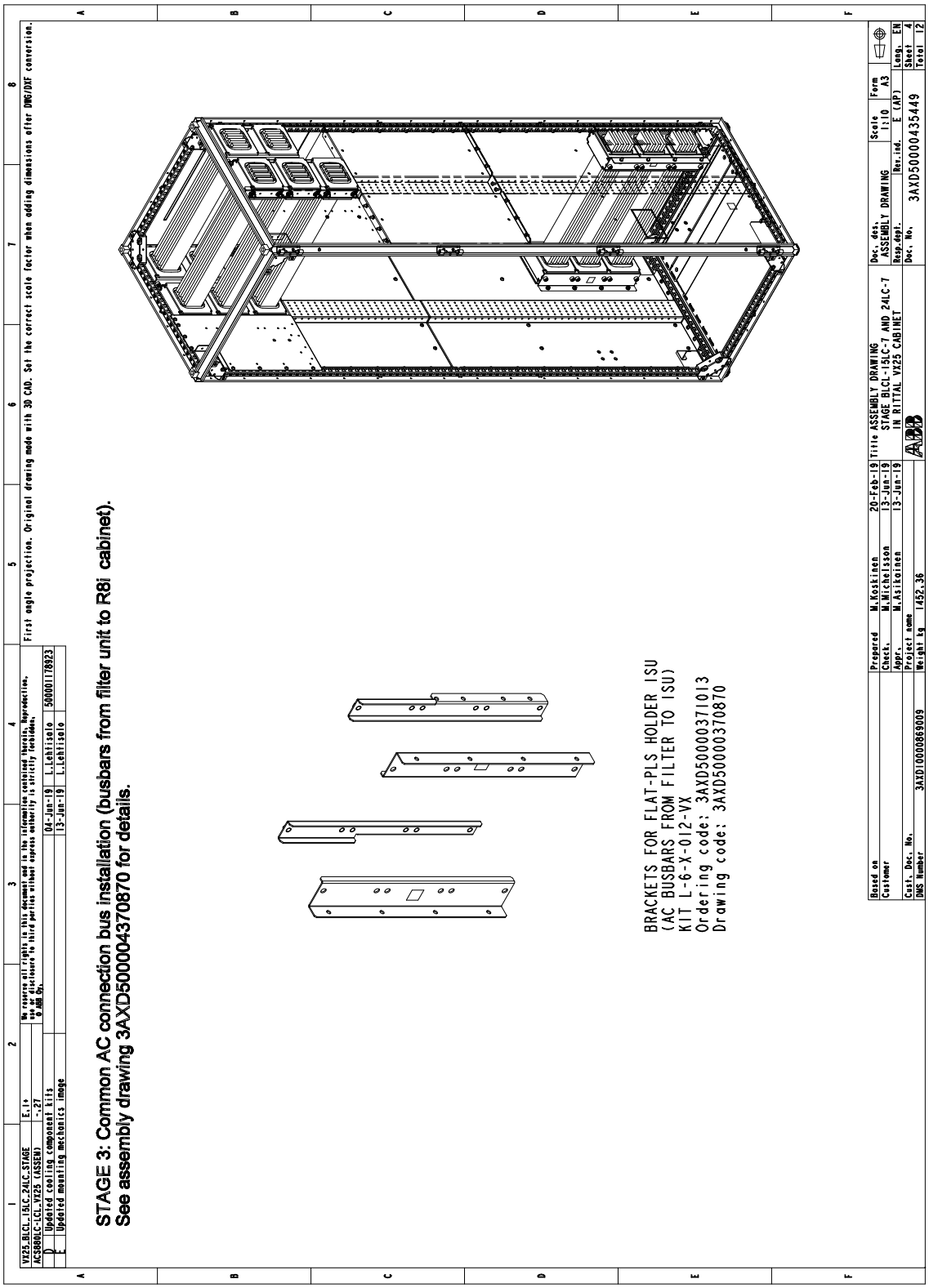

Stage 4A: BLCL-15LC-7: AC connection and fuse busbars installation

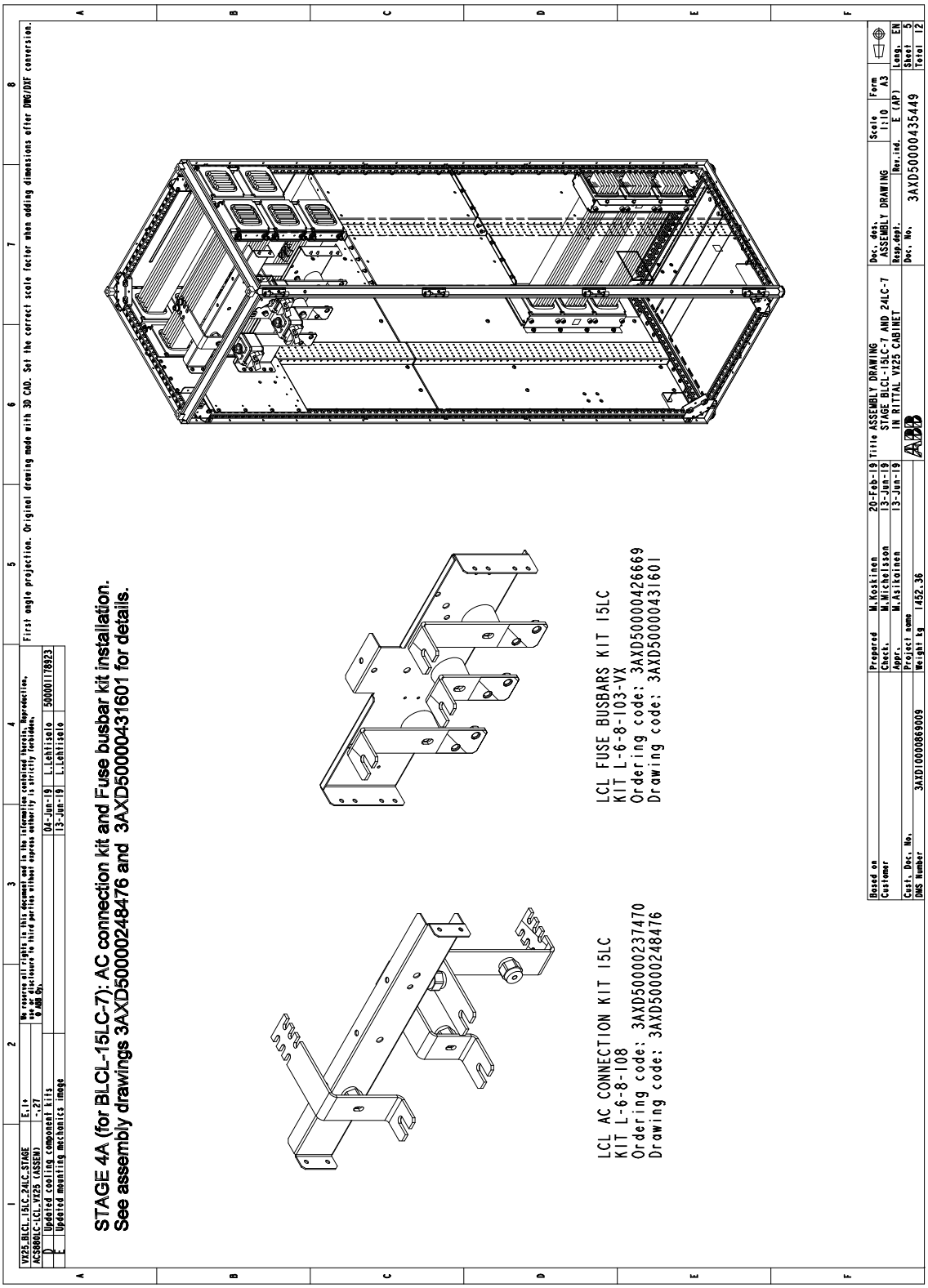

Stage 4B: BLCL-24LC-7: AC connection and fuse busbars installation

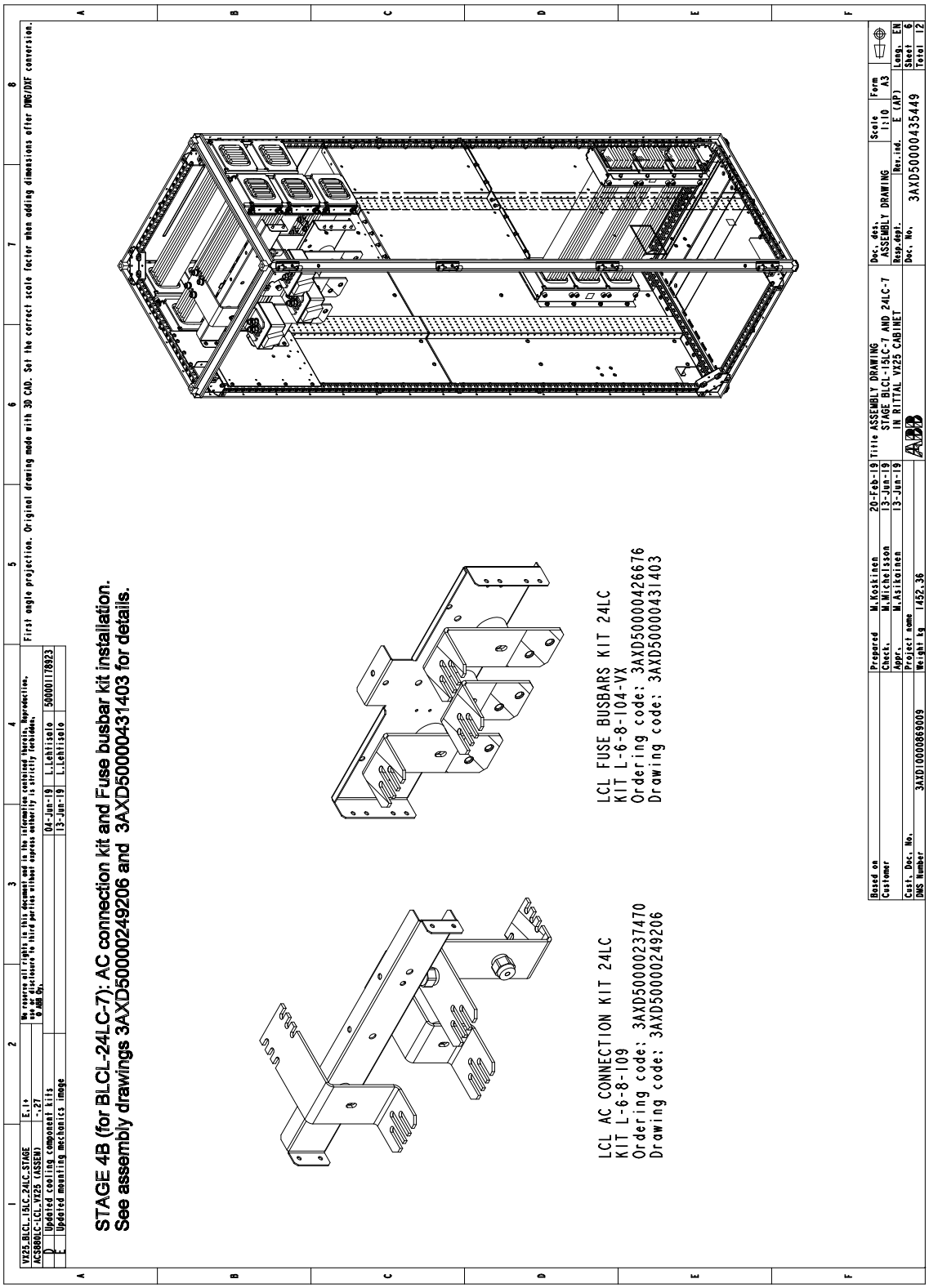

Stage 5: Installation of LCL choke mounting mechanics and LCL ISU connection

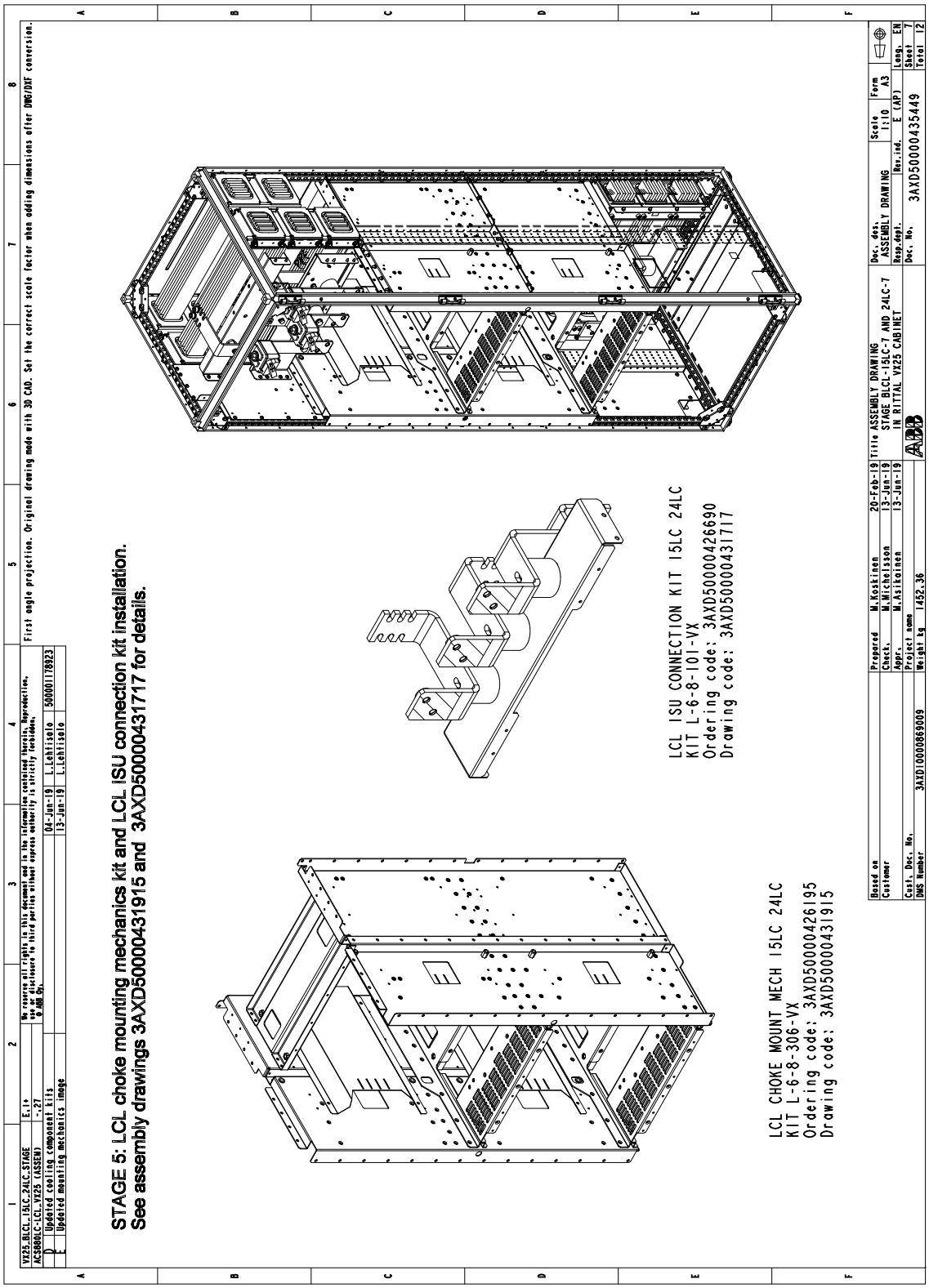

Stage 6: LCL choke and LCL choke busbar installation

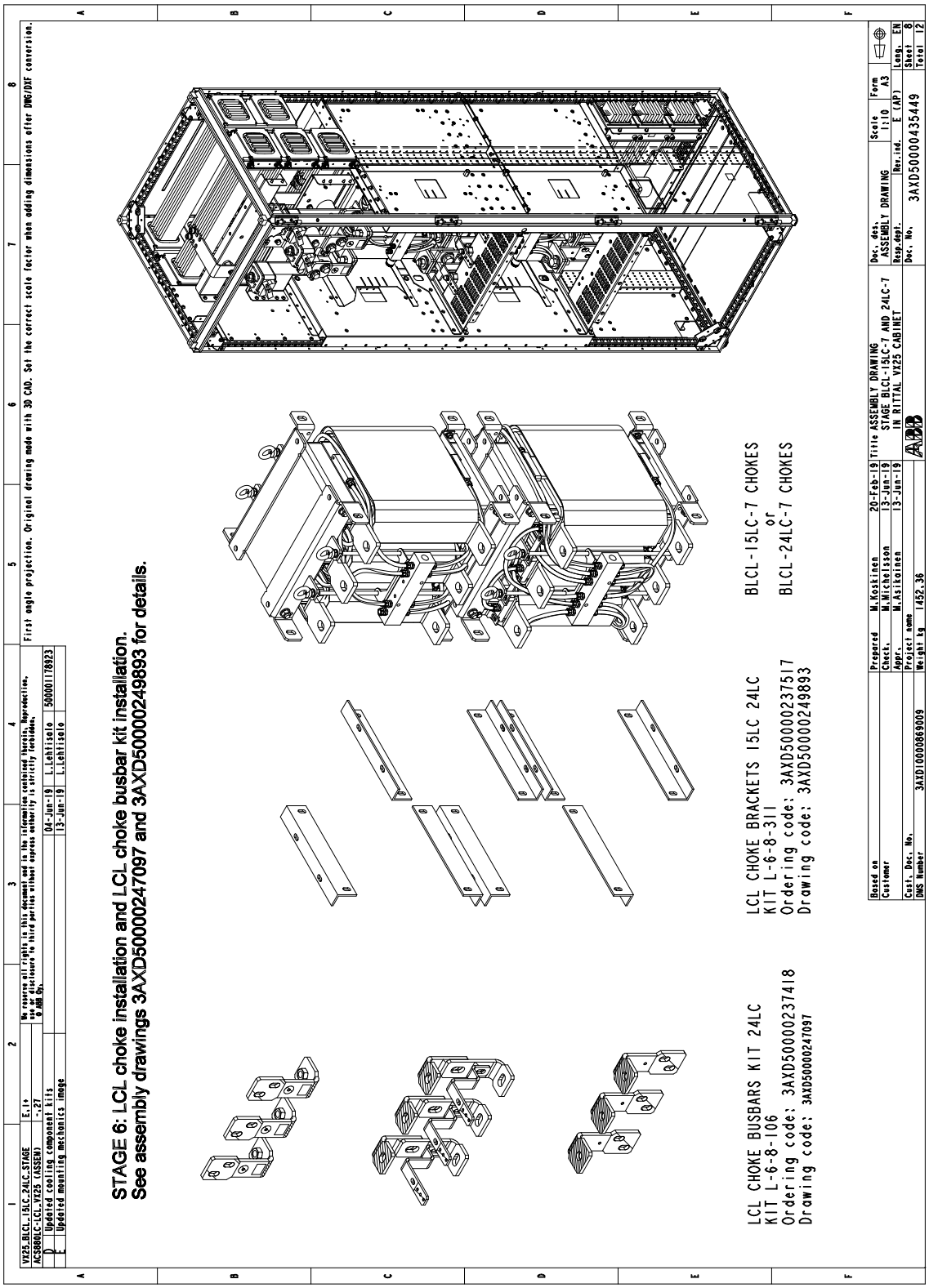

Stage 7: Heat exchanger, heat exchanger mechanics and cooling components installation

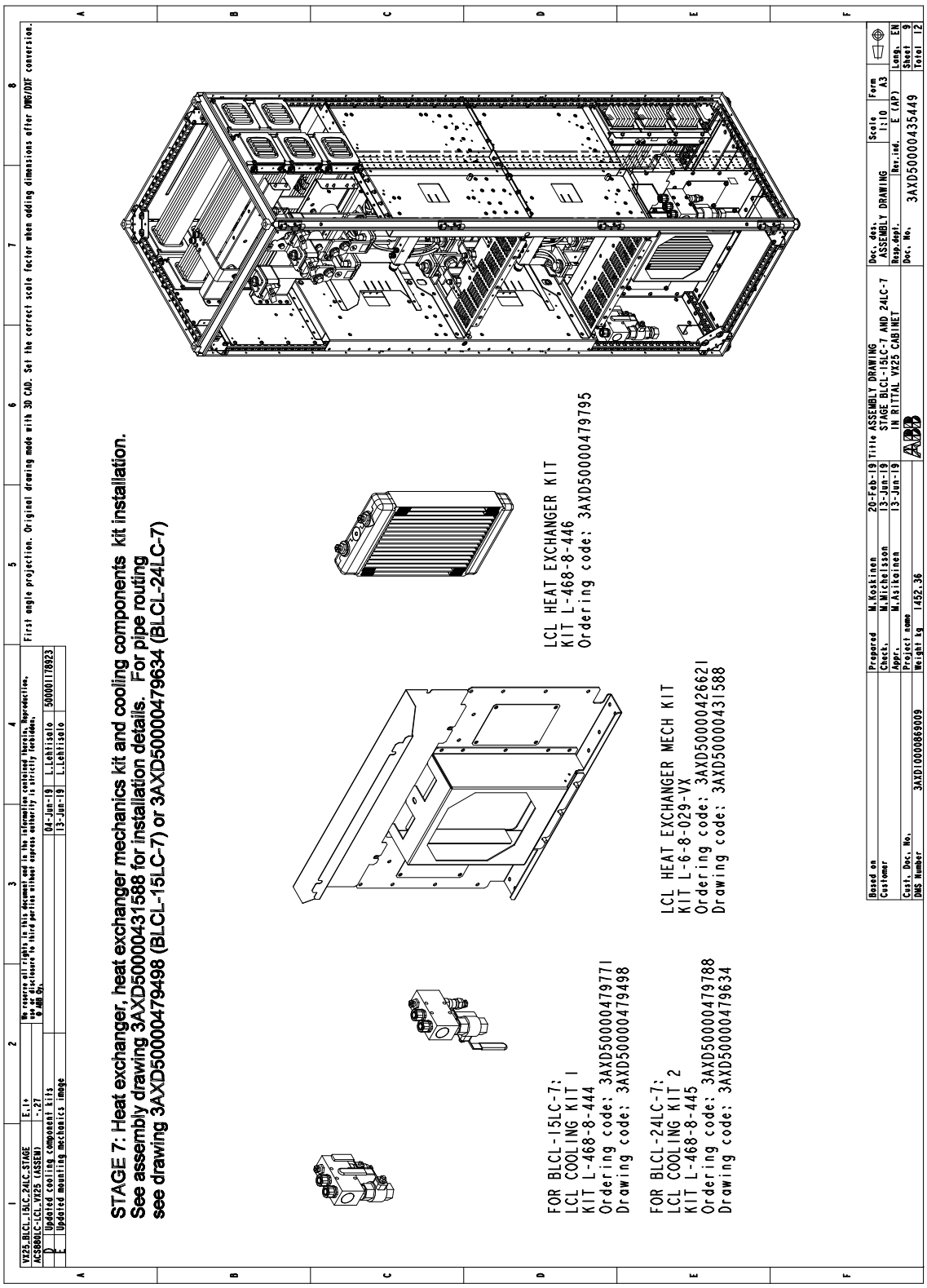

Stage 8A: BLCL-15LC-7: LCL capacitor support, fan support mechanics and fan installation

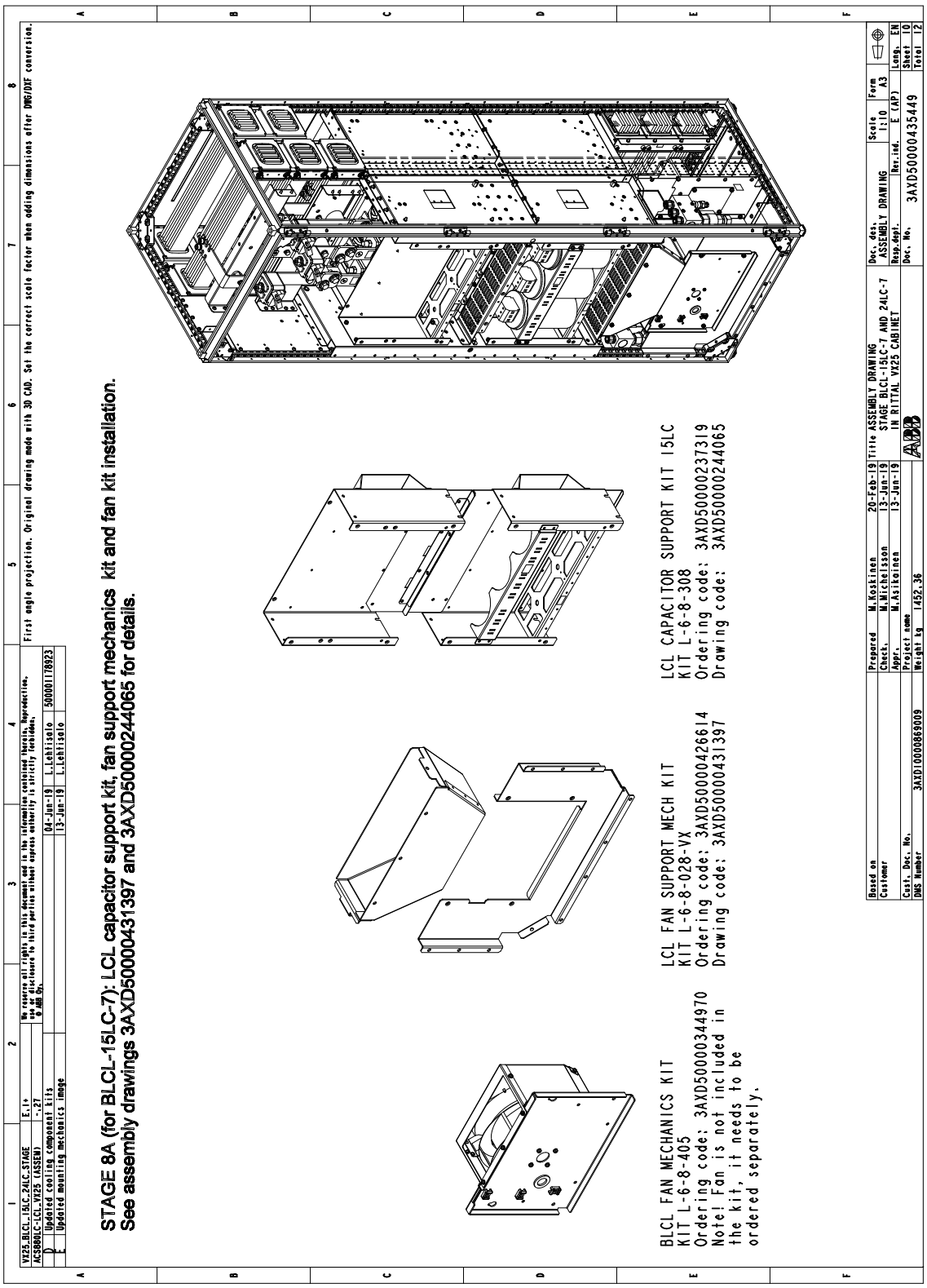

Stage 8B: BLCL-24LC-7: LCL capacitor support, fan support mechanics and fan installation

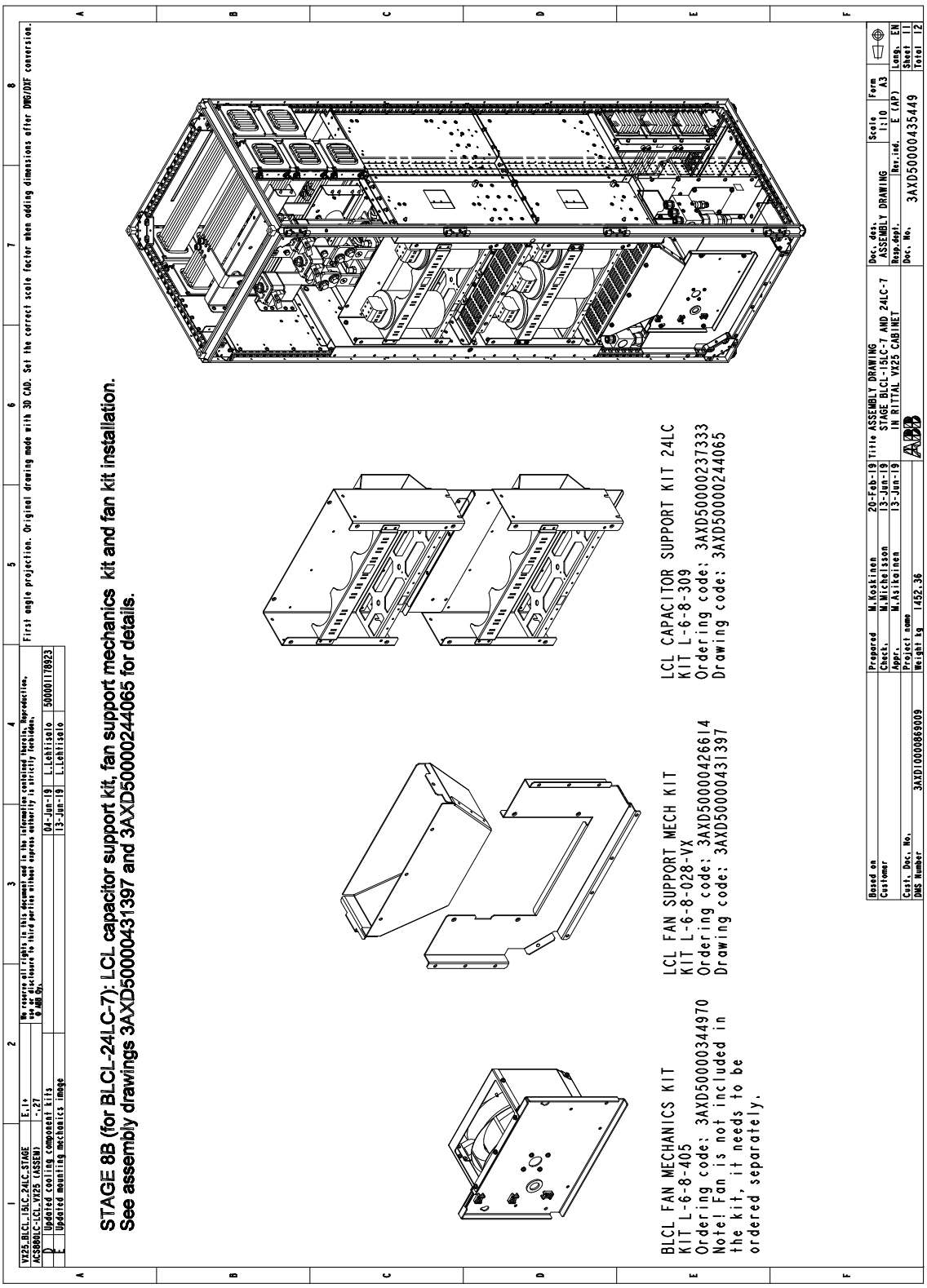

Stage 9: Installation of LCL shroud kit

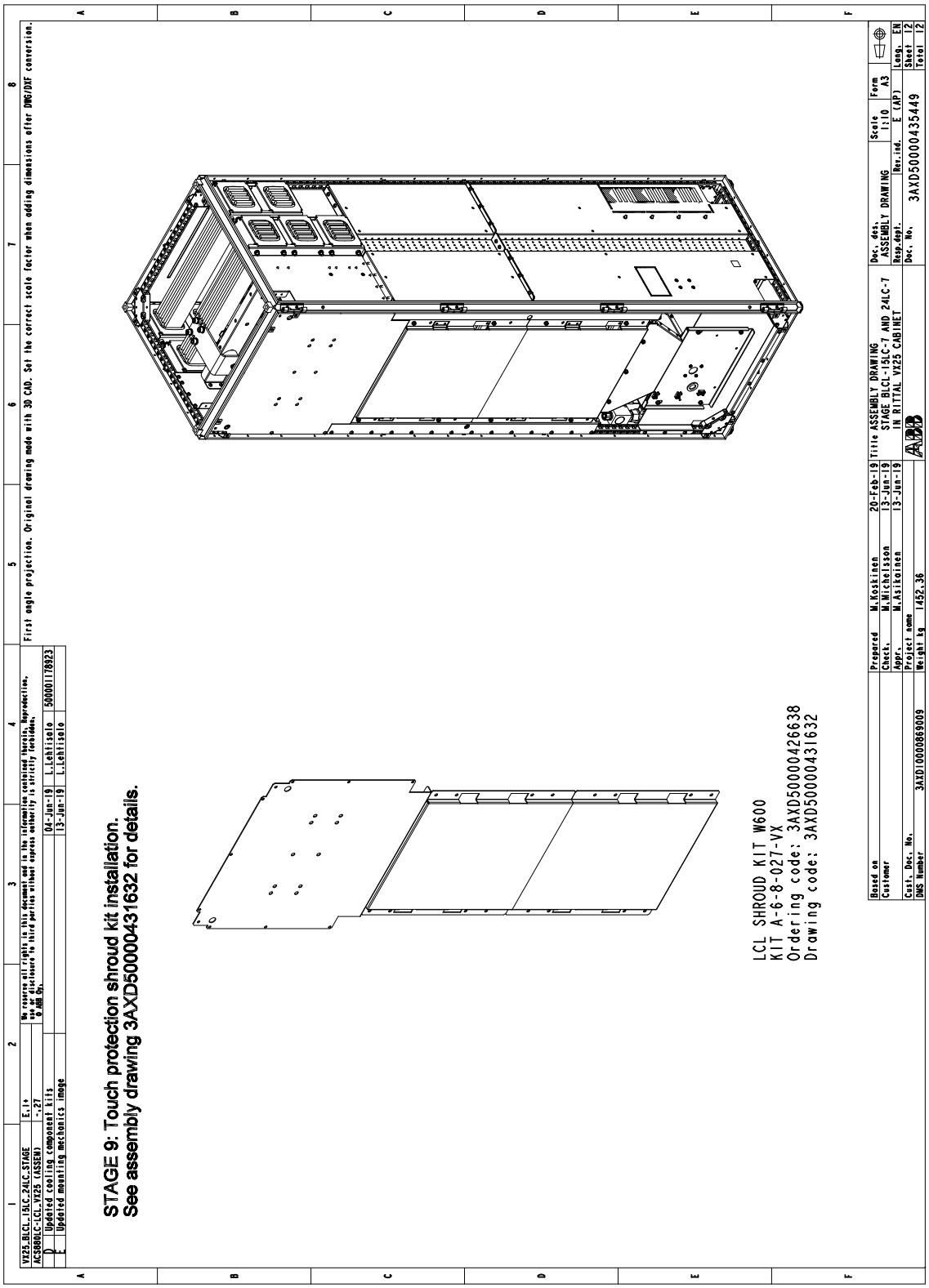

BLCL-15LC-7 / BLCL-24LC-7 in a 600 mm wide generic enclosure

Parts to be installed	Instruction code	Kit code	Kit ordering code
BLCL-15LC-7: LCL fuse busbars	3AXD50000431601	L-6-8-103-VX	3AXD50000426669
BLCL-24LC-7: LCL fuse busbars	3AXD50000431403	L-6-8-104-VX	3AXD50000426676
BLCL-15LC-7: LCL capacitor support	3AXD50000244065	L-6-8-308	3AXD50000237319
BLCL-24LC-7: LCL capacitor support	3AXD50000244065	L-6-8-309	3AXD50000237333
LCL choke and LCL choke busbar installation	3AXD50000247097	L-6-8-106	3AXD50000237418
	AXD50000249893	L-6-8-311	3AXD50000237517
	-	BLCL-15LC-7 chokes or BLCL-24LC-7 chokes	-
LCL choke mounting mechanics	3AXD50000431915	L-6-8-306-VX	3AXD50000426195
Fan mechanics	-	L-6-8-405	3AXD50000344970
Heat exchanger, heat exchanger mechanics and cooling components installation	3AXD50000479498 3AXD50000479634	BLCL-15LC-7: L-468-8-444 BLCL-24LC-7: L-468-8-445	3AXD50000479771 3AXD50000479788
	3AXD50000431588	L-6-8-029-VX	3AXD50000426621
	-	L-468-8-446	3AXD50000479795

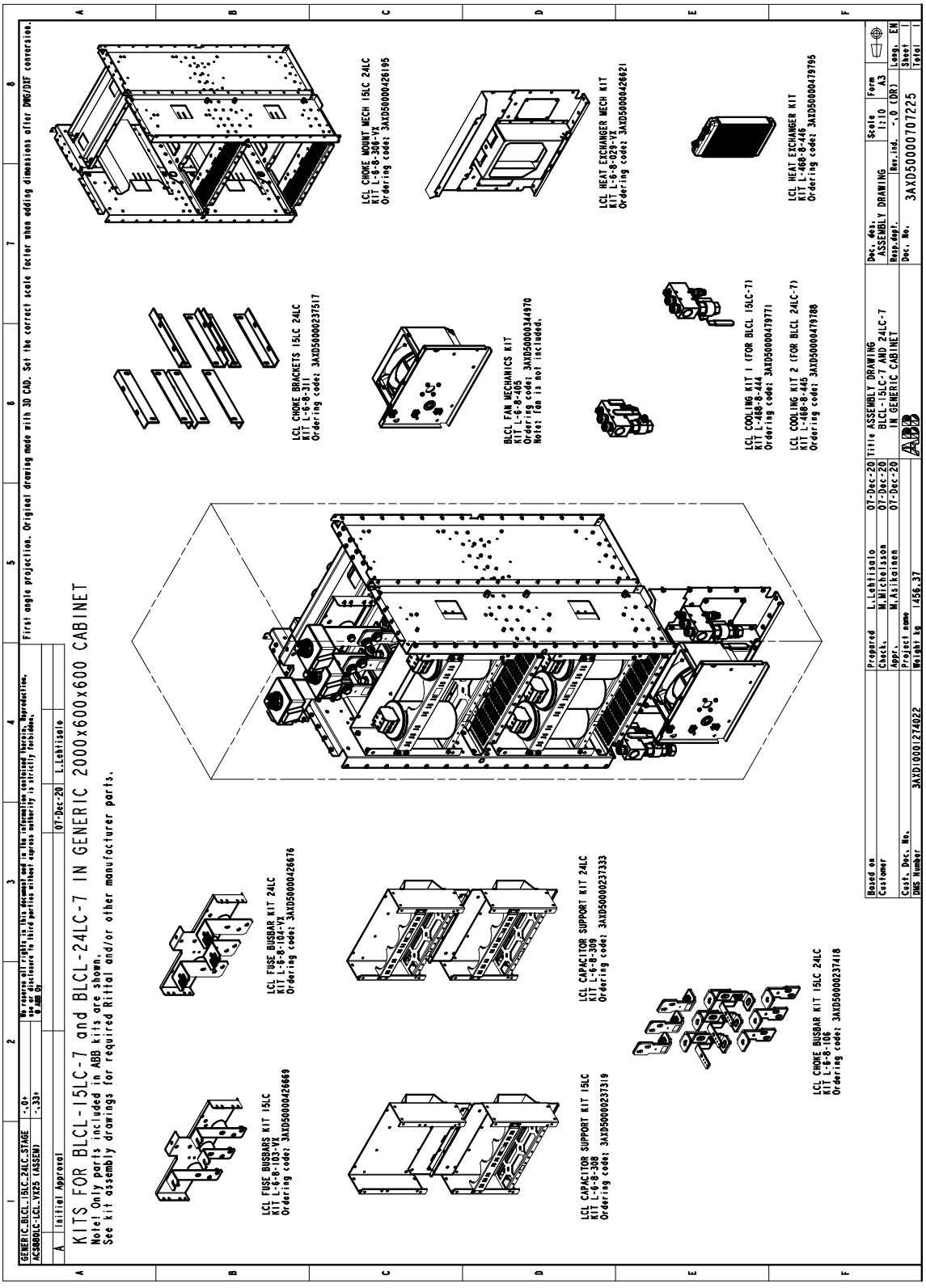
KITS FOR BLCL-15LC-7 and BLCL-24LC-7 IN GENERIC 2000x600 CABINET
Note! Only parts included in ABB kits are shown.
See kit assembly drawings for required Rittal and/or other manufacturer parts.
LCL FUSE BUSBARS KIT 15LC
KIT L-6-8-103-VX
Ordering code: 3AXD50000426669
LCL FUSE BUSBAR KIT 24LC
KIT L-6-8-104-VX
Ordering code: 3AXD50000426676
LCL CAPACITOR SUPPORT KIT 15LC
KIT L-6-8-308
Ordering code: 3AXD50000237319
LCL CAPACITOR SUPPORT KIT 24LC
KIT L-6-8-309
Ordering code: 3AXD50000237333
LCL CHOKE BUSBAR KIT 15LC 24LC
KIT L-6-8-106
Ordering code: 3AXD50000237418
LCL CHOKE BRACKETS 15LC 24LC
KIT L-6-8-311
Ordering code: 3AXD50000237517
LCL CHOKE MOUNT MECH 15LC 24LC
KIT L-6-8-306-VX
Ordering code: 3AXD50000426195
BLCL FAN MECHANICS KIT
KIT L-6-8-405
Ordering code: 3AXD50000344970
Note! Fan is not included.
LCL COOLING KIT 1 (FOR BLCL 15LC-7)
KIT L-468-8-444
Ordering code: 3AXD50000479771
LCL COOLING KIT 2 (FOR BLCL 24LC-7)
KIT L-468-8-445
Ordering code: 3AXD50000479788
LCL HEAT EXCHANGER MECH KIT
KIT L-6-8-029-VX
Ordering code: 3AXD50000426821
LCL HEAT EXCHANGER KIT
KIT L-468-8-446
Ordering code: 3AXD50000479795
GENERIC_BLCL_15LC_24LC_STAGE -.0-
AC500LC-LCL_VX25 (ASSEM) -.33-
Initial Approval 07-Dec-20 L.Lehtisalo
First angle projection. Original drawing made with 3D CAD. Set the correct scale factor when adding dimensions after DWG/DXF conversion.
Based on
Customer
Cust. Doc. No.
DMS Number 3AXD10001274022
Prepared L.Lehtisalo 07-Dec-20
Check. M.Michelsson 07-Dec-20
Appr. M.Asikainen 07-Dec-20
Project name
Weight kg 1456.37
Title ASSEMBLY DRAWING
BLCL-15LC-7 AND 24LC-7
IN GENERIC CABINET
Doc. des. ASSEMBLY DRAWING
Resp.dept.
Doc. No. 3AXD50000707225
Scale 1:10
Rev.ind. -.0 (DR)
Form A3
Lang. EN
Sheet 1
Total 1

BLCL-25LC-7 in a 600 mm wide Rittal VX25 enclosure

Installation stages

No.	Installation stage	Instruction code	Kit code	Kit ordering code
1	Cabinet floor	-	-	-
	Common DC bus	3AXD50000333639	A-468-X-001-VX	3AXD50000333387
	Marine support kit	-	L-6-8-500-VX	3AXD50000457885
2	LCL side plates and common AC bus	3AXD50000429653	L-468-8-314-VX	3AXD50000426652
		3AXD50000245987	L-6-X-012	3AXD50000237371
3	Brackets for Flat-PLS holder installation	3AXD50000370870	L-6-X-012-VX	3AXD50000371013
4	AC connection and fuse busbars	3AXD50000249534	L-6-8-110	3AXD50000237494
		3AXD50000431724	L-6-8-105-VX	3AXD50000426683
5	LCL choke mounting mechanics and LCL ISU connection	3AXD50000431816	L-6-8-307-VX	3AXD50000426201
		3AXD50000431502	L-6-8-102-VX	3AXD50000426706
6	LCL choke and LCL choke busbar installation	3AXD50000247080	L-6-8-107	3AXD50000237425
		-	BLCL-25LC-7 chokes	-
7	Heat exchanger, heat exchanger mechanics and cooling components installation	3AXD50000479634	L-468-8-445	3AXD50000479788
		3AXD50000431588	L-6-8-029-VX	3AXD50000426621
		-	L-468-8-446	3AXD50000479795
8	LCL capacitor support, fan support mechanics and fan installation	-	L-6-8-405	3AXD50000344970
		3AXD50000431397	L-6-8-028-VX	3AXD50000426614
		3AXD50000244065	L-6-8-310	3AXD50000237340
9	LCL shroud kit installation	3AXD50000431632	A-6-8-027-VX	3AXD50000426638

Overview of kits

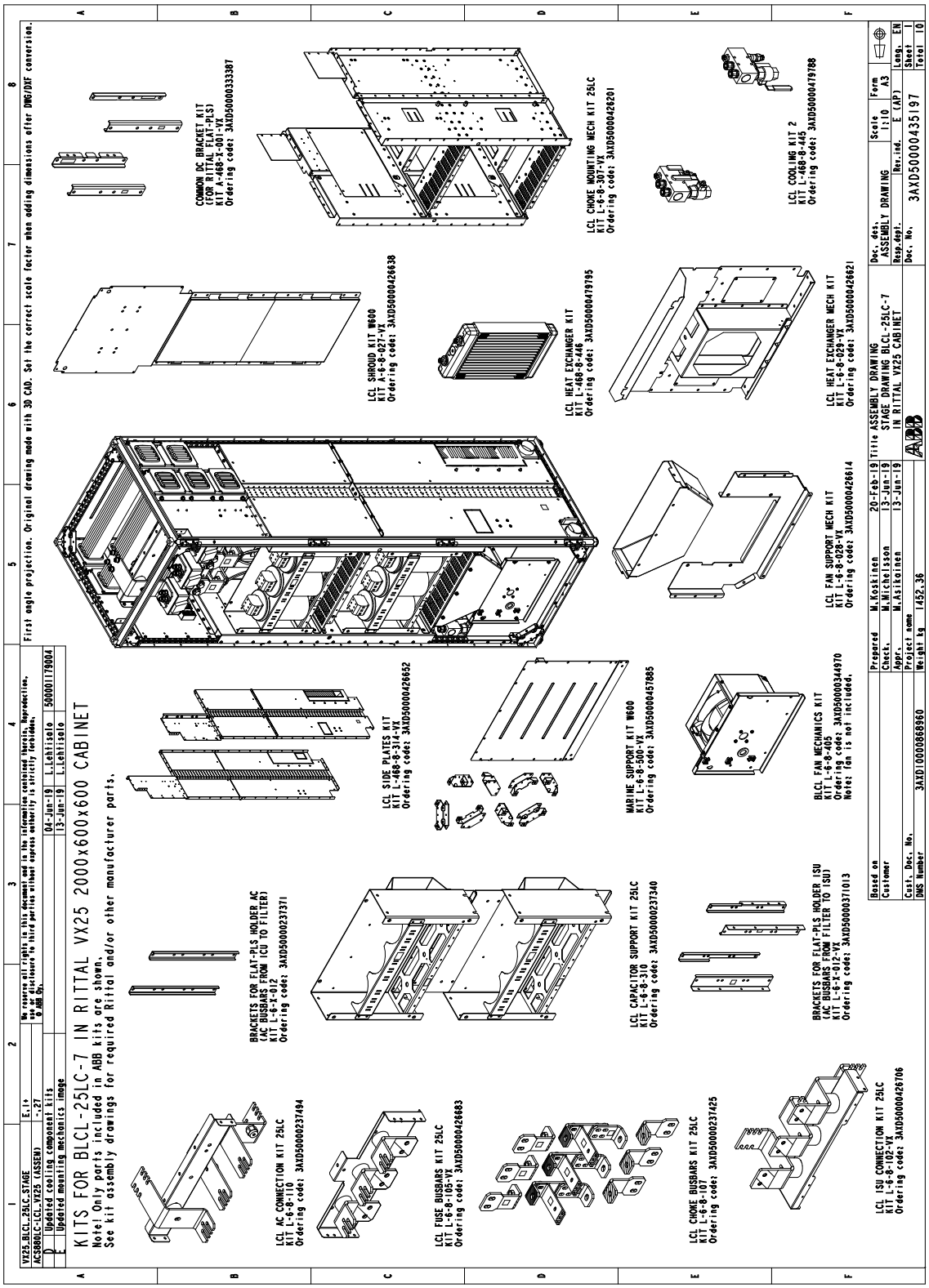

Stage 1: Installation of common parts

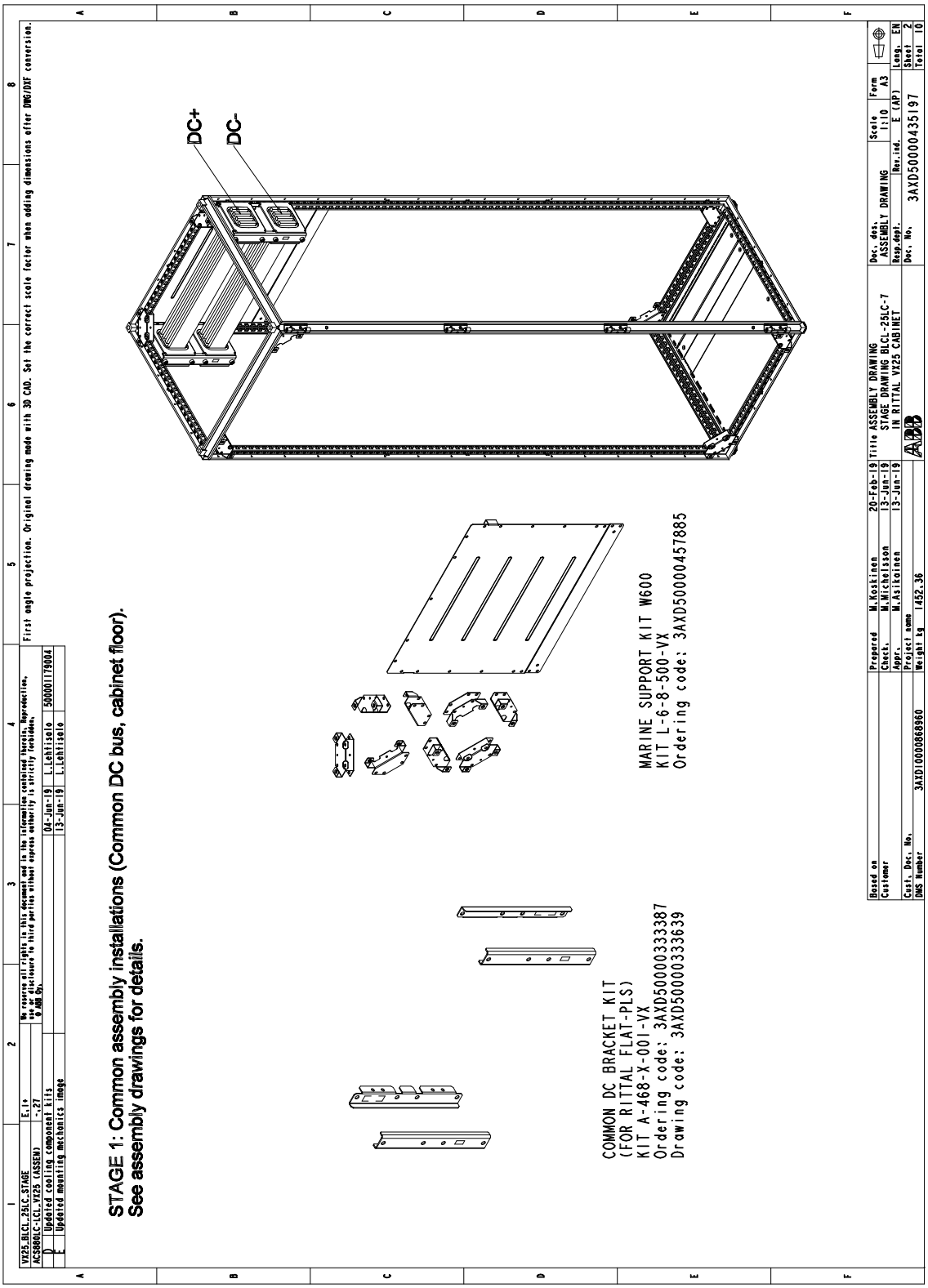

Stage 2: Installation of LCL side plates and common AC bus

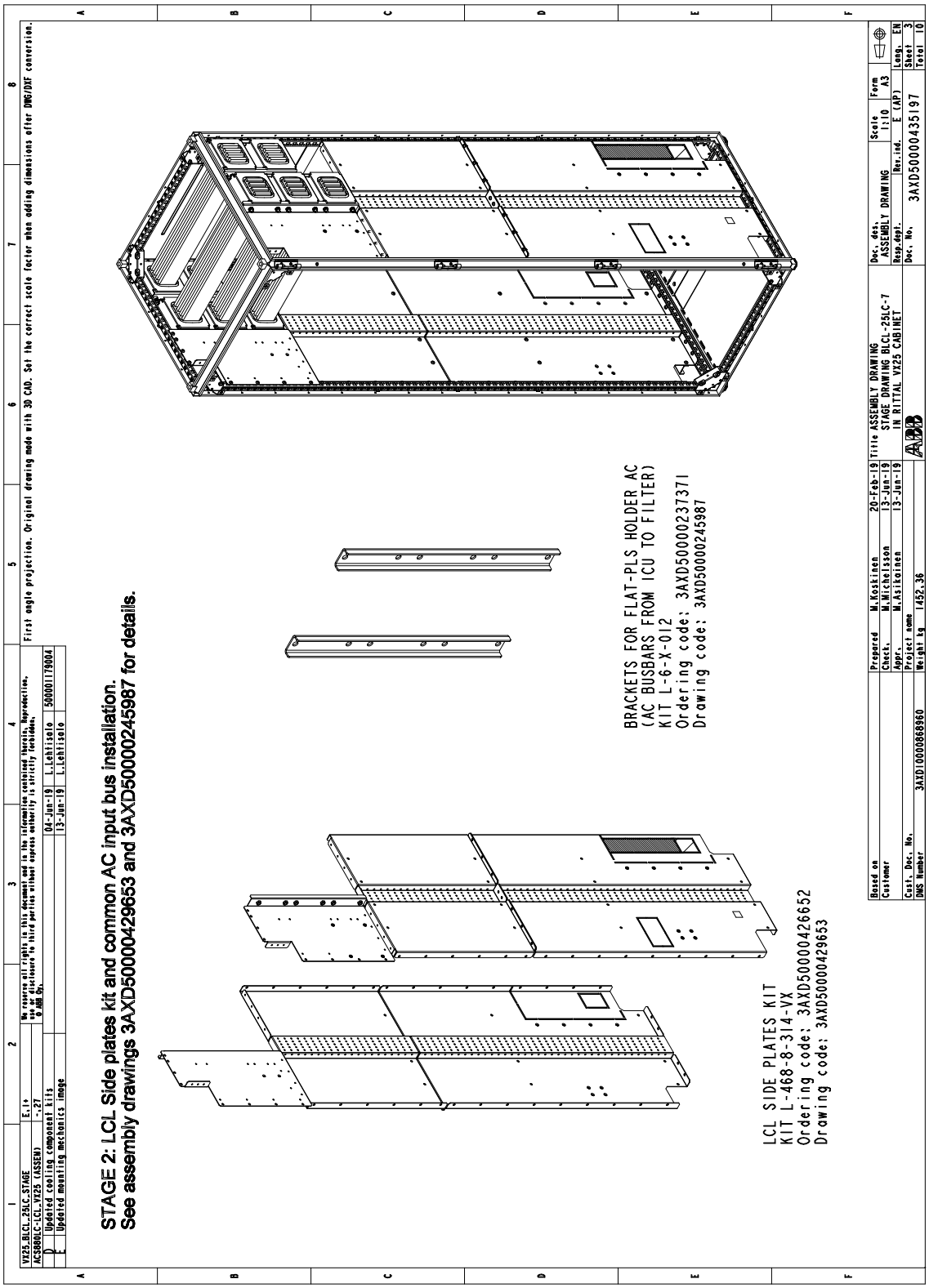

Stage 3: Installation of brackets for Flat-PLS holder

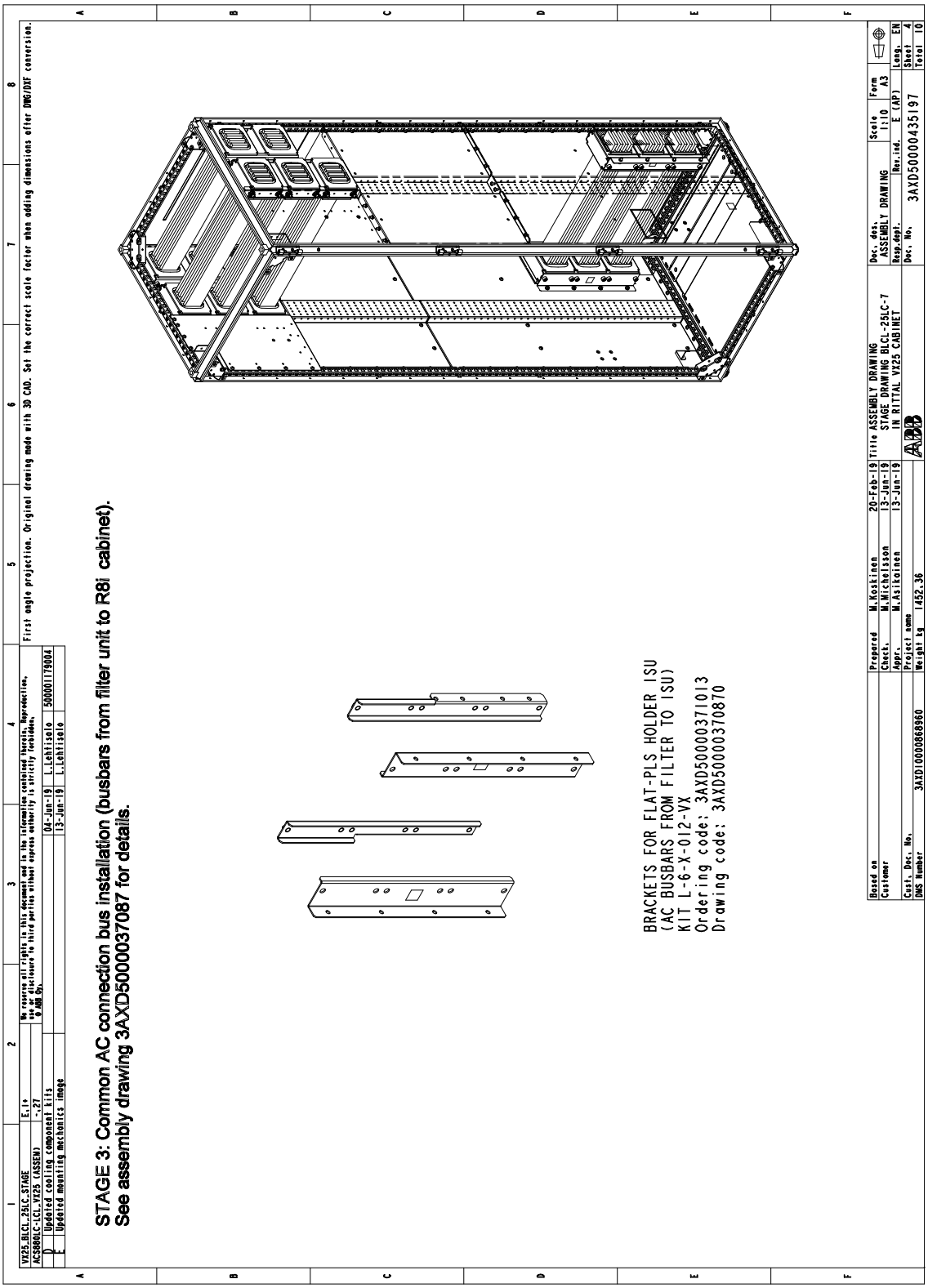

Stage 4: AC connection and fuse busbars installation

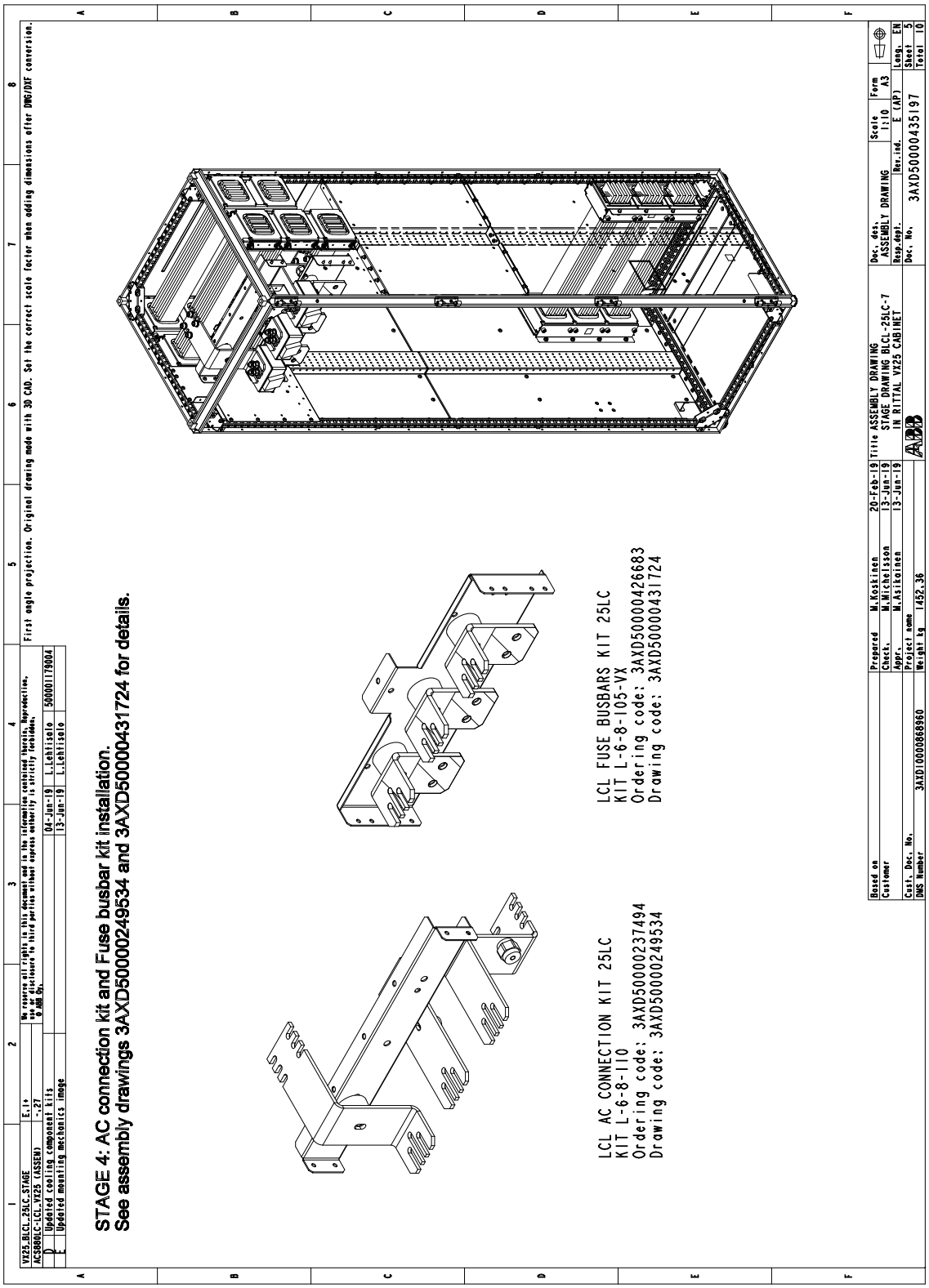

Stage 5: Installation of LCL choke mounting mechanics and LCL ISU connection

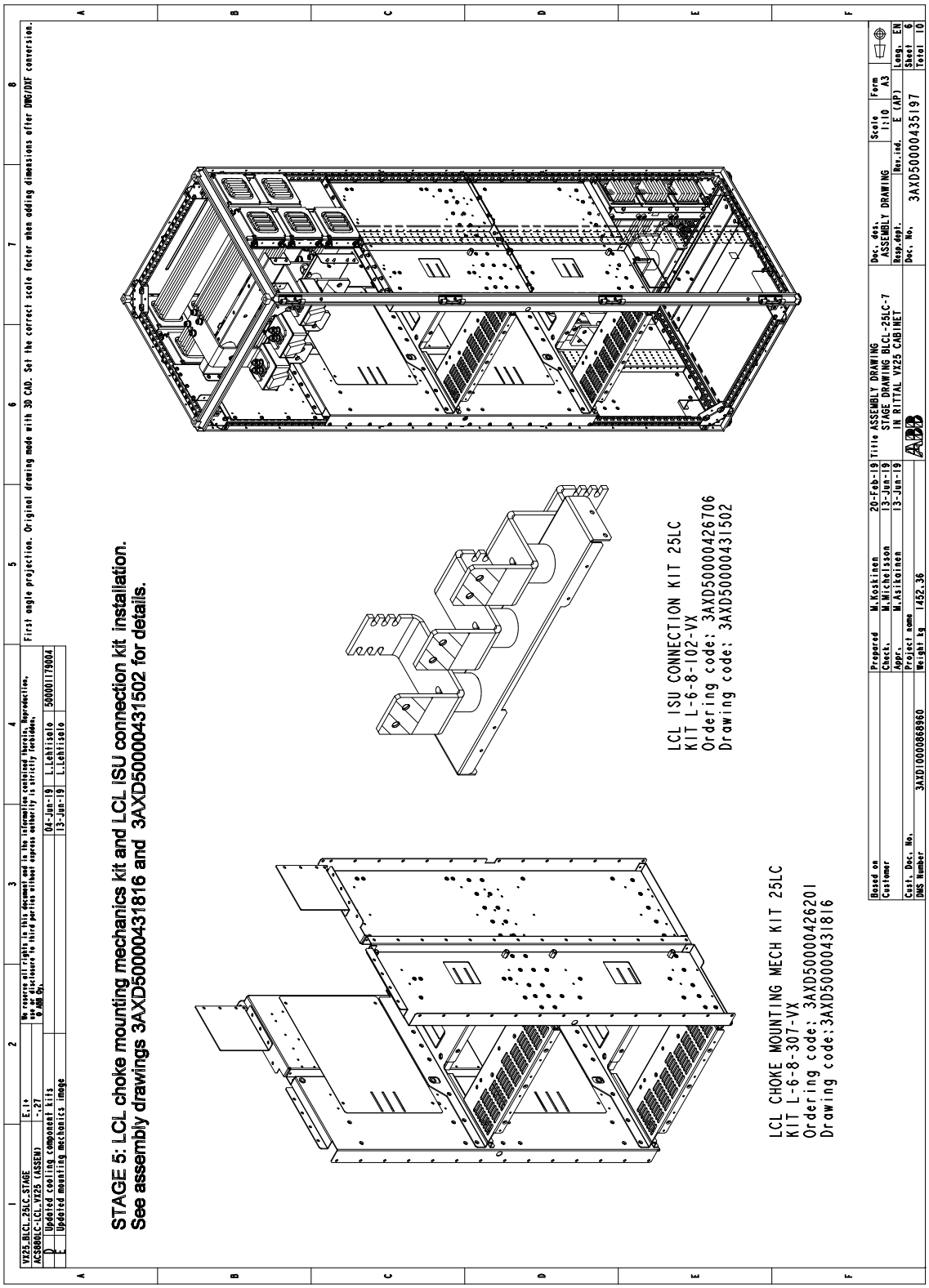

Stage 6: LCL choke and LCL choke busbar installation

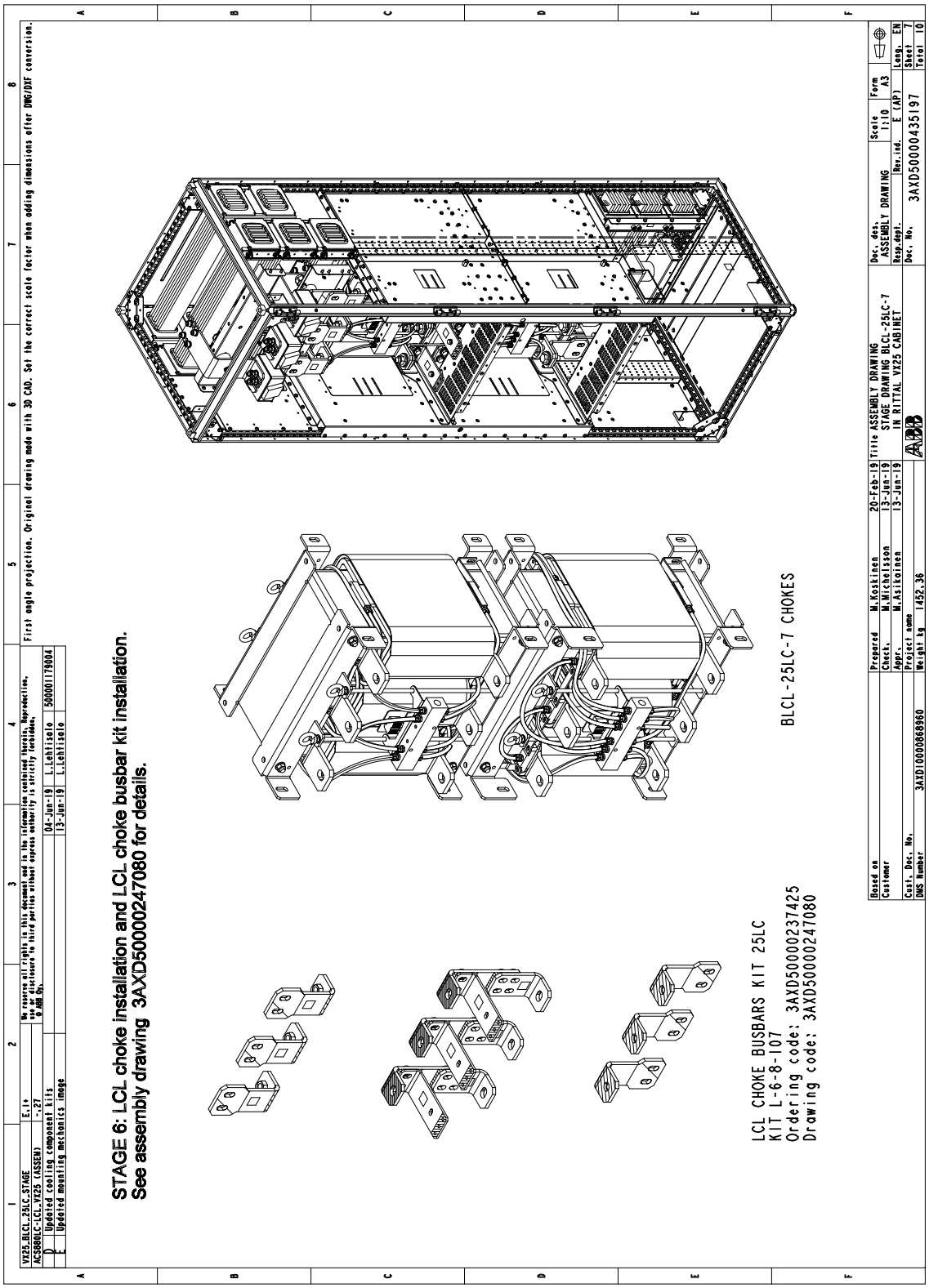

Stage 7: Heat exchanger, heat exchanger mechanics and cooling components installation

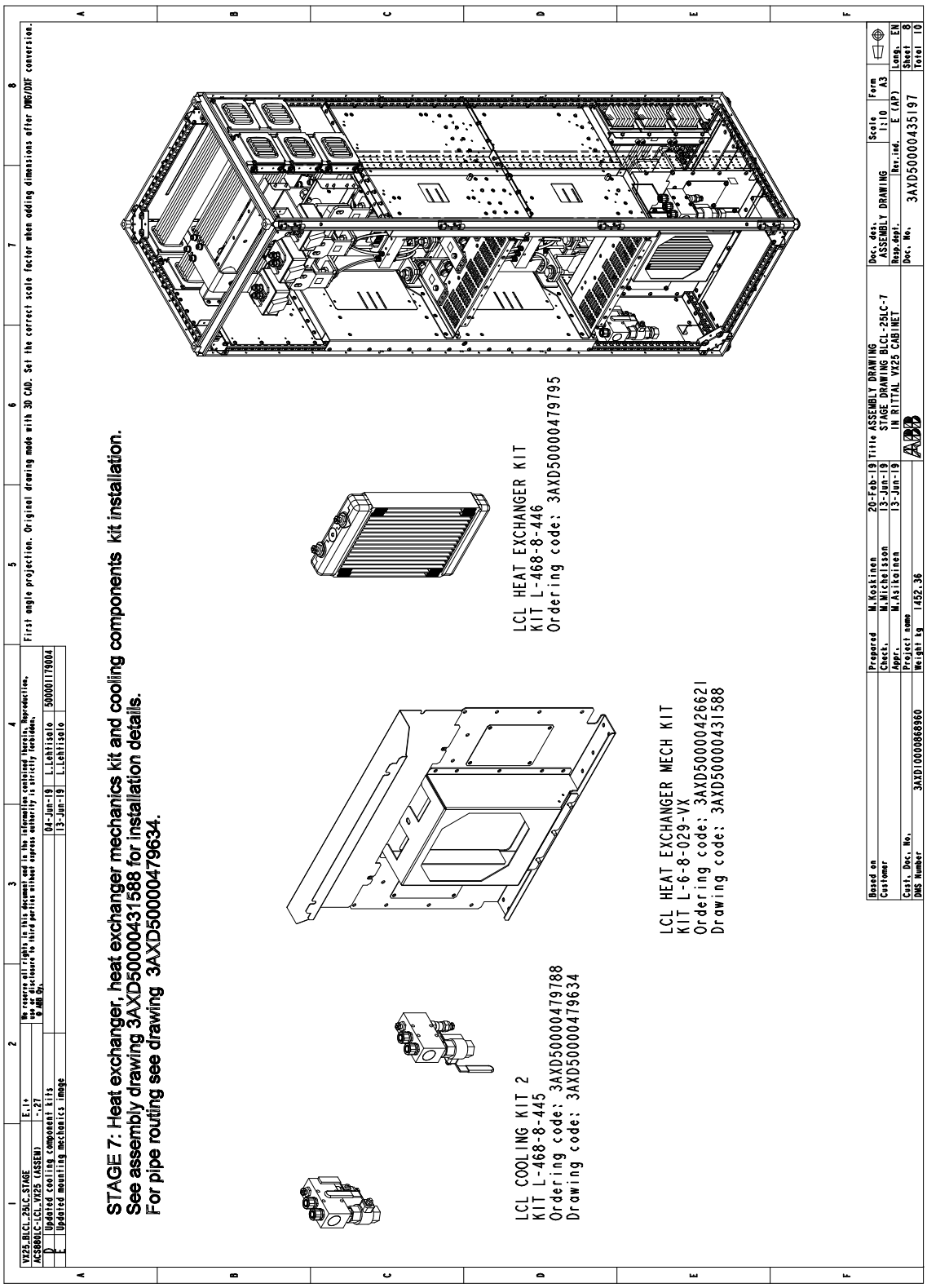

Stage 8: LCL capacitor support, fan support mechanics and fan installation

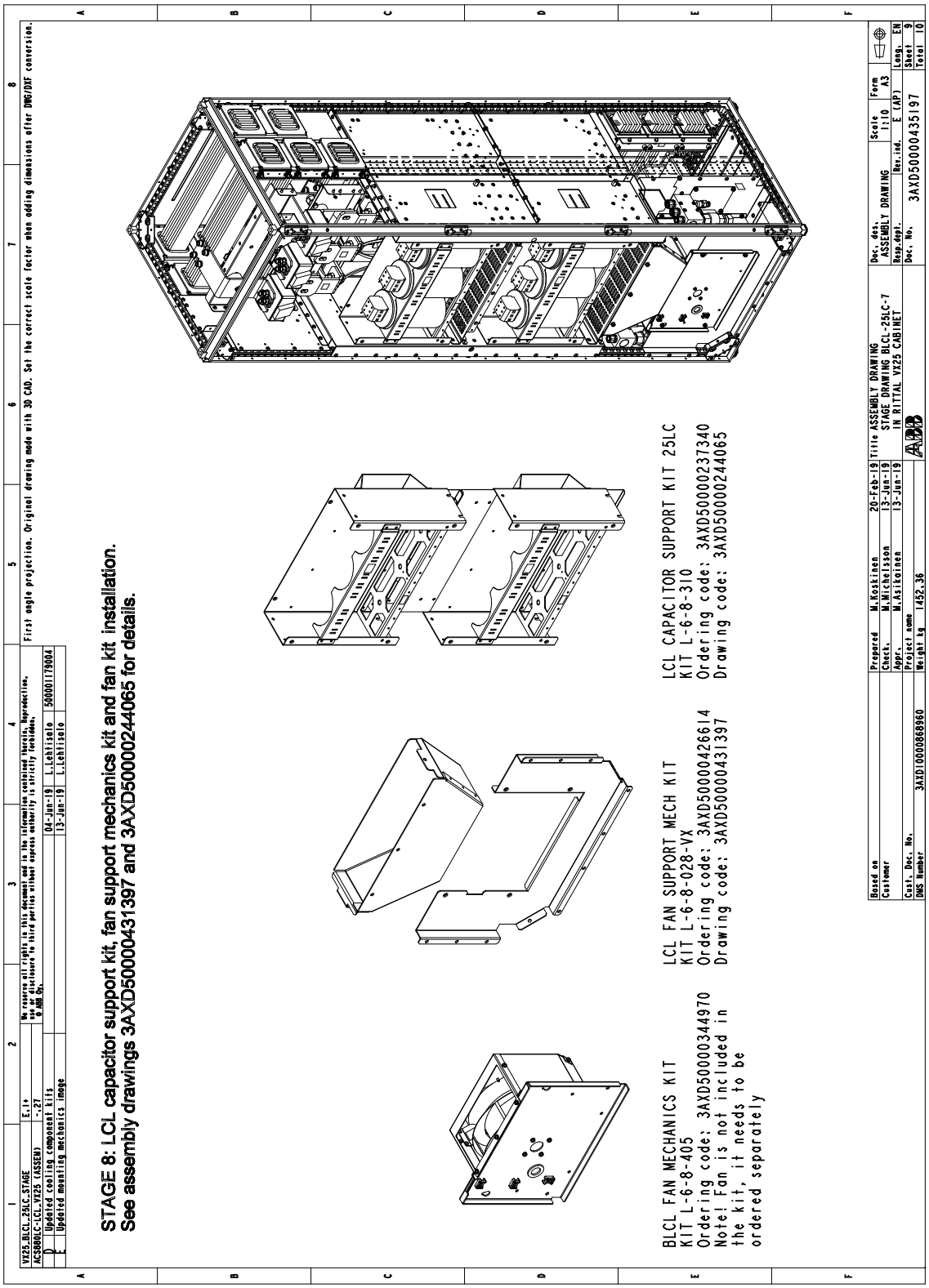

Stage 9: Installation of LCL shroud kit

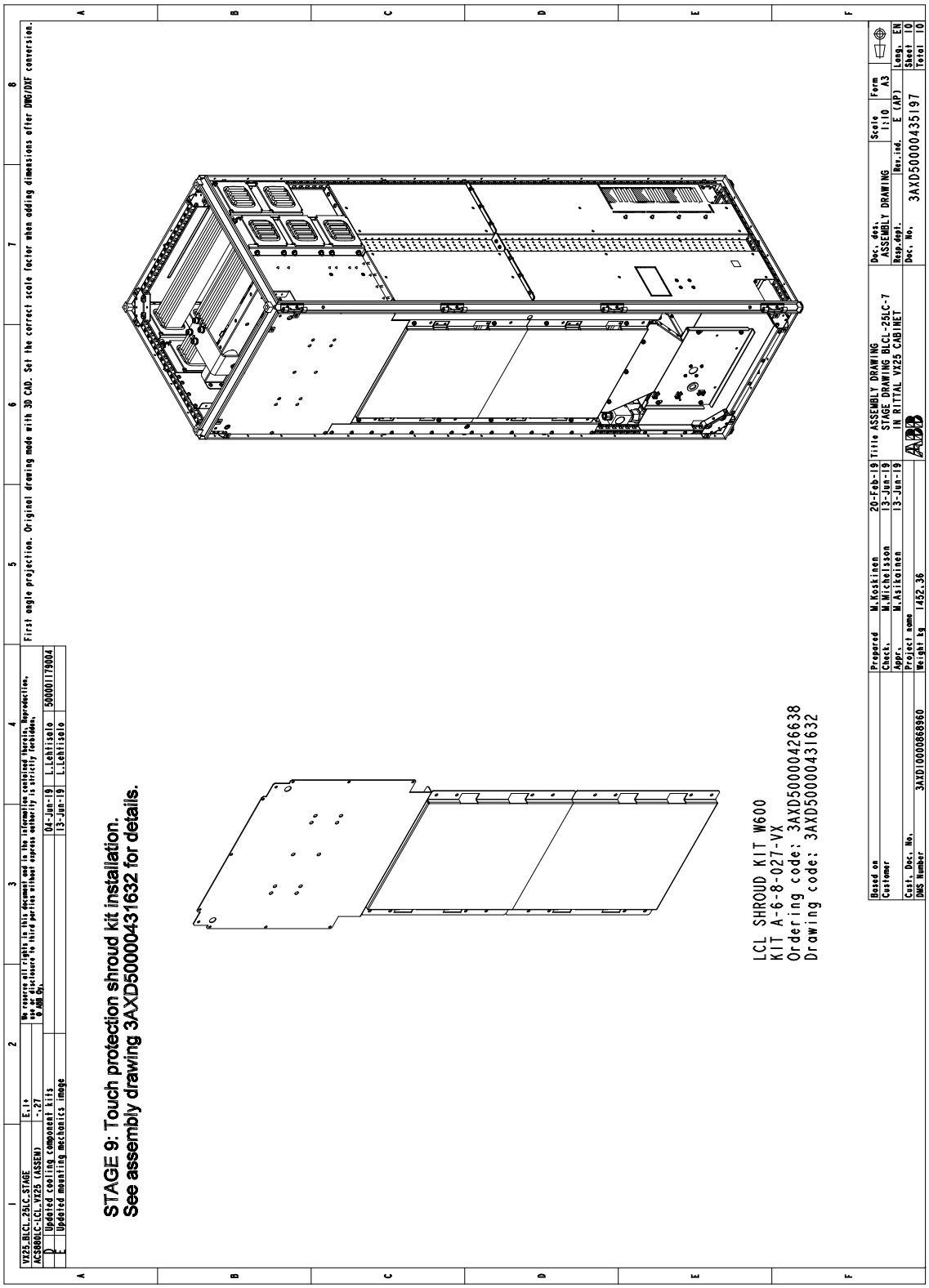

BLCL-25LC-7 in a 600 mm wide generic enclosure

Parts to be installed	Instruction code	Kit code	Kit ordering code
LCL fuse busbars	3AXD50000431724	L-6-8-105-VX	3AXD50000426683
LCL choke and LCL choke busbar installation	3AXD50000247080	L-6-8-107	3AXD50000237425
	-	BLCL-25LC-7 chokes	-
LCL choke mounting mechanics	3AXD50000431816	L-6-8-307-VX	3AXD50000426201
LCL capacitor support	3AXD50000244065	L-6-8-310	3AXD50000237340
Fan mechanics	-	L-6-8-405	3AXD50000344970
Heat exchanger, heat exchanger mechanics and cooling components installation	3AXD50000479634	L-468-8-445	3AXD50000479788
	3AXD50000431588	L-6-8-029-VX	3AXD50000426621
	-	L-468-8-446	3AXD50000479795

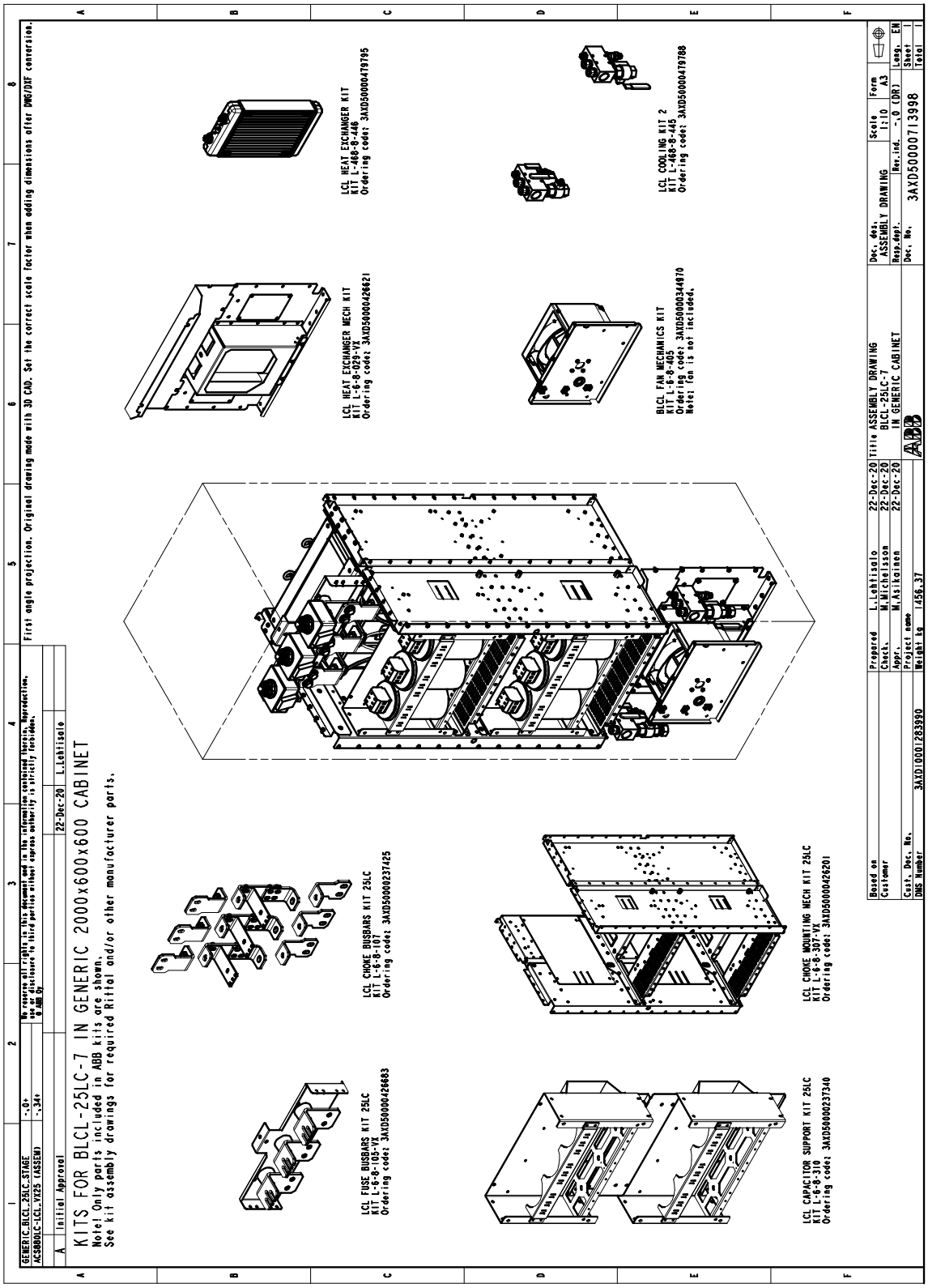
KITS FOR BLCL-25LC-7 IN GENERIC 2000x600x600 CABINET
Note! Only parts included in ABB kits are shown.
See kit assembly drawings for required Rittal and/or other manufacturer parts.
LCL FUSE BUSBARS KIT 25LC
KIT L-6-8-103-VX
Ordering code: 3AXD50000420683
LCL CHOKE BUSBARS KIT 25LC
KIT L-6-8-107
Ordering code: 3AXD50000237425
LCL CAPACITOR SUPPORT KIT 25LC
KIT L-6-8-310
Ordering code: 3AXD50000237340
LCL CHOKE MOUNTING MECH KIT 25LC
KIT L-6-8-307-VX
Ordering code: 3AXD50000426201
LCL HEAT EXCHANGER MECH KIT
KIT L-6-8-029-VX
Ordering code: 3AXD50000426821
LCL HEAT EXCHANGER KIT
KIT L-468-8-446
Ordering code: 3AXD50000479795
BLCL FAN MECHANICS KIT
KIT L-6-8-405
Ordering code: 3AXD50000344970
Note! fan is not included.
LCL COOLING KIT 2
KIT L-468-8-445
Ordering code: 3AXD50000479788
GENERIC_BLCL_25LC_STAGE
AC5000LC-LCL_VY25 (ASSEM)
Initial Approval
22-Dec-20 L.Lehtisalo
First angle projection. Original drawing made with 3D CAD. Set the correct scale factor when adding dimensions after DWG/DXF conversion.
Based on
Customer
Cust. Doc. No.
DMS Number
3AXD10001283990
Prepared L.Lehtisalo 22-Dec-20
Check. M.Michelsson 22-Dec-20
Appr. M.Asikainen 22-Dec-20
Project name
Weight kg 1456.37
Title ASSEMBLY DRAWING
BLCL-25LC-7
IN GENERIC CABINET
Doc. des. ASSEMBLY DRAWING
Resp.dept.
Doc. No. 3AXD50000713998
Scale 1:10
Rev.ind. -.0 (ORI)
Form A3
Lang. EN
Sheet 1
Total 1

One R8i module in a 400 mm wide Rittal VX25 enclosure

Layout drawing

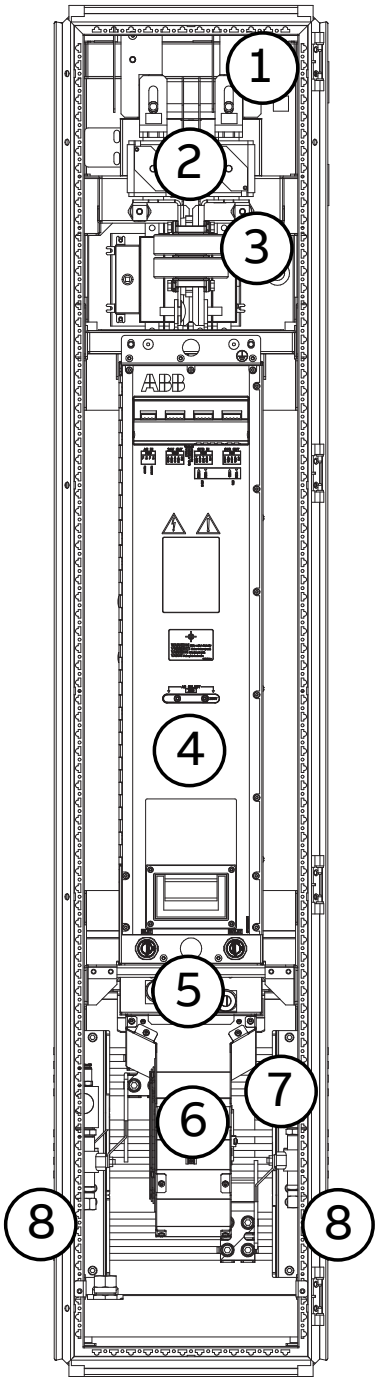

No.	Description
1	Common DC busbars (Rittal Flat-PLS)
2	DC fuses and optional DC switch
3	Common mode filter
4	IGBT supply module
5	Heat exchanger
6	Cooling fan
7	AC connection to LCL filter (Rittal Flat-PLS)
8	Inlet and outlet manifold with valves

Pipe routing example

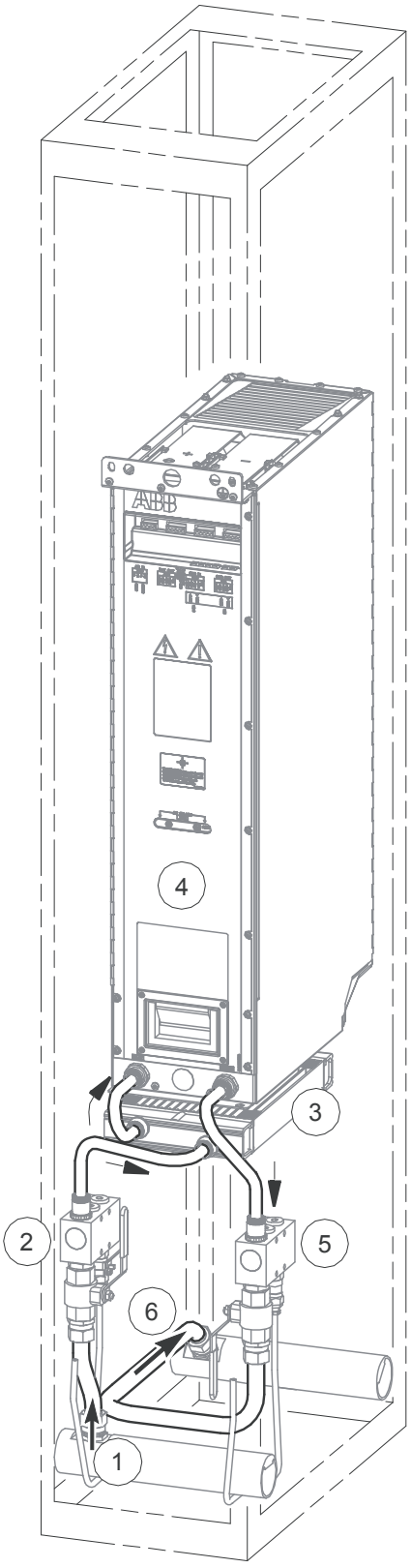

No.	Description
1	Coolant in
2	Inlet manifold with stop and drain valves
3	Heat exchanger
4	IGBT supply module
5	Outlet manifold with stop and drain valves
6	Coolant out

Installation stages

No.	Installation stage	Instruction code	Kit code	Kit ordering code
1	Baying parts	3AXD50000336340	-	-
	DC bus	3AXD50000333639	A-468-X-001-VX	3AXD50000333387
2	Side plate, module mounting mechanics and quick connectors	3AXD50000327591	L-468-8-020-VX	3AXD50000360543
		3AXD50000330461	L-4-8-301-VX	3AXD50000360598
		3AUA0000118667	A-468-8-100	3AUA0000119227
3	Flat-PLS support kit for AC and common AC connection busbars	3AXD50000370870	L-468-X-012-VX	3AXD50000371013
		3AXD50000352791	L-468-8-121-VX	3AXD50000371037
4	Fan, heat exchanger and cooling components	-	-	3AXD50000043886 / 3AXD50000045414
		-	L-468-8-440	3AXD50000041265
		3AXD50000048217	L-468-8-441	3AXD50000044084
5A	DC busbars	3AXD50000332861	L-4-8-201-VX	3AXD50000360604
		3AXD50000332885	L-4-8-251-VX	3AXD50000361021
		3AXD50000041311	L-468-8-230	3AXD50000041264
5B	DC switch, DC connection and common mode filter busbar kits	3AXD50000342600	L-4-8-254-VX	3AXD50000361038
		3AXD50000343614	L-46-8-207-VX	3AXD50000360567
		3AXD50000205042	L-46-8-233	3AXD50000200368
6	Module installation	-	-	-
7	Shrouding	3AXD50000353354	L-4-8-022-VX	3AXD50000361083

Overview of kits

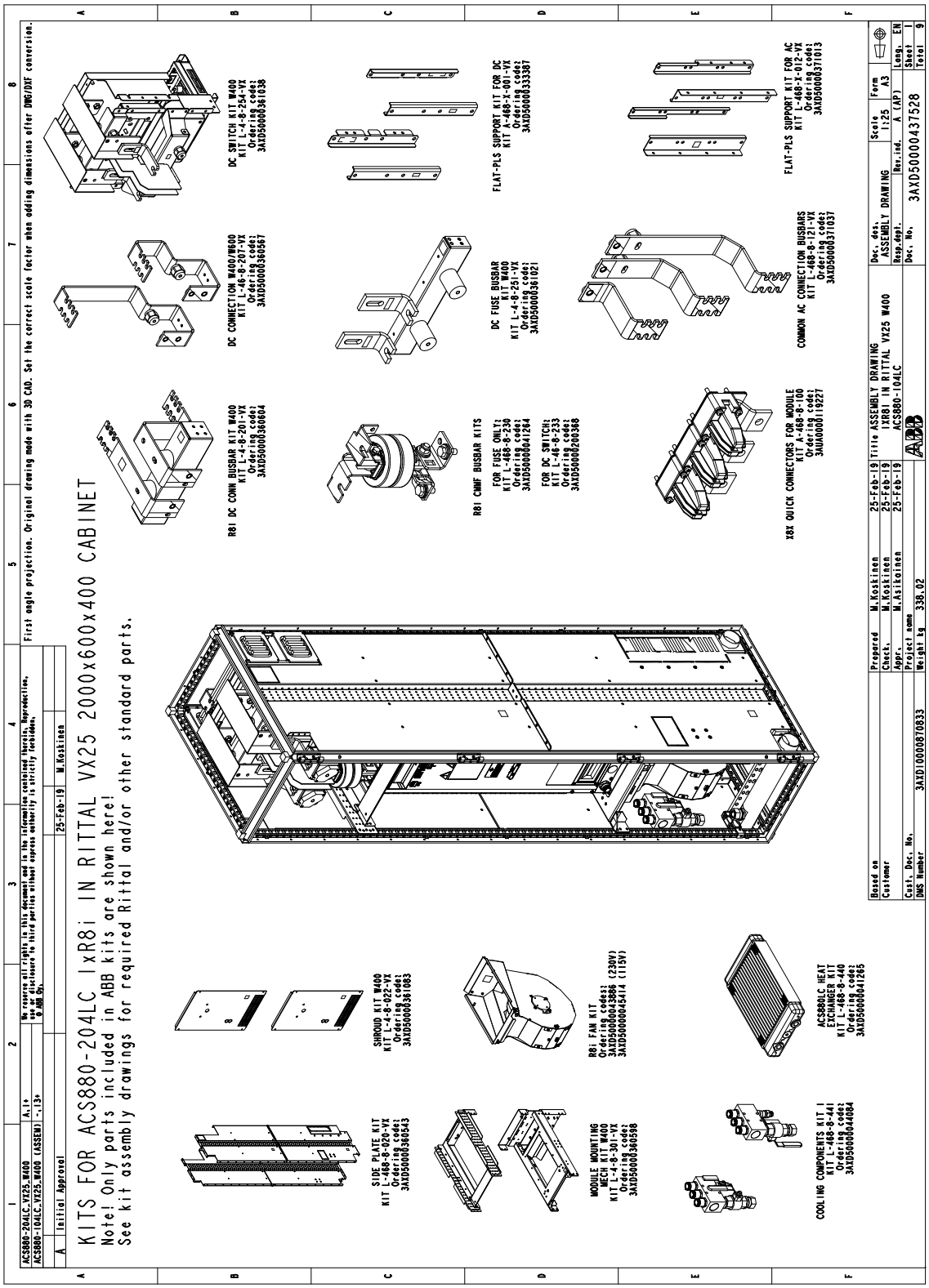

Stage 1: Installation of common parts

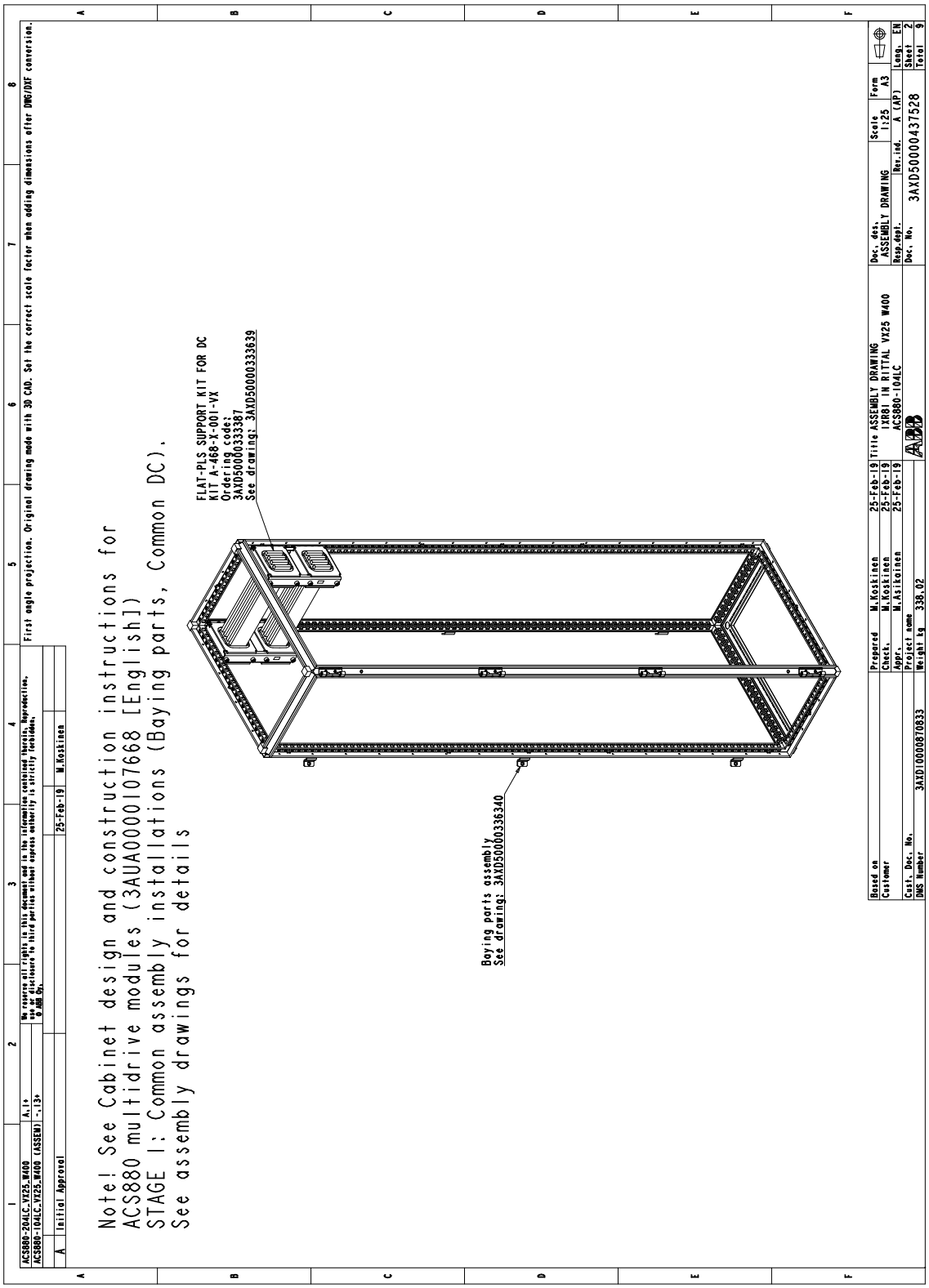

Stage 2: Side plate, module mounting mechanics and quick connectors

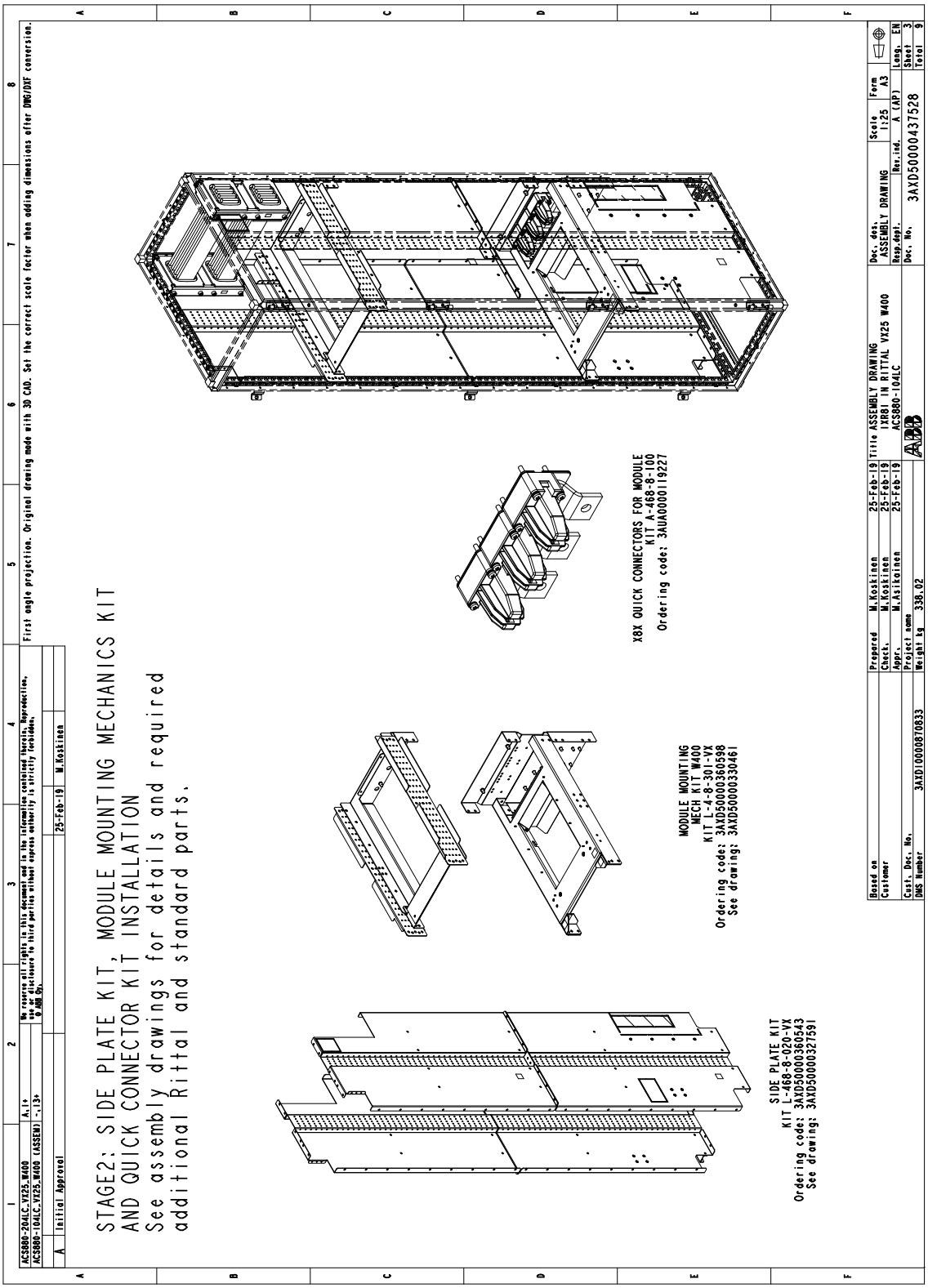

Stage 3: Flat-PLS support kit for AC and common AC connection busbars

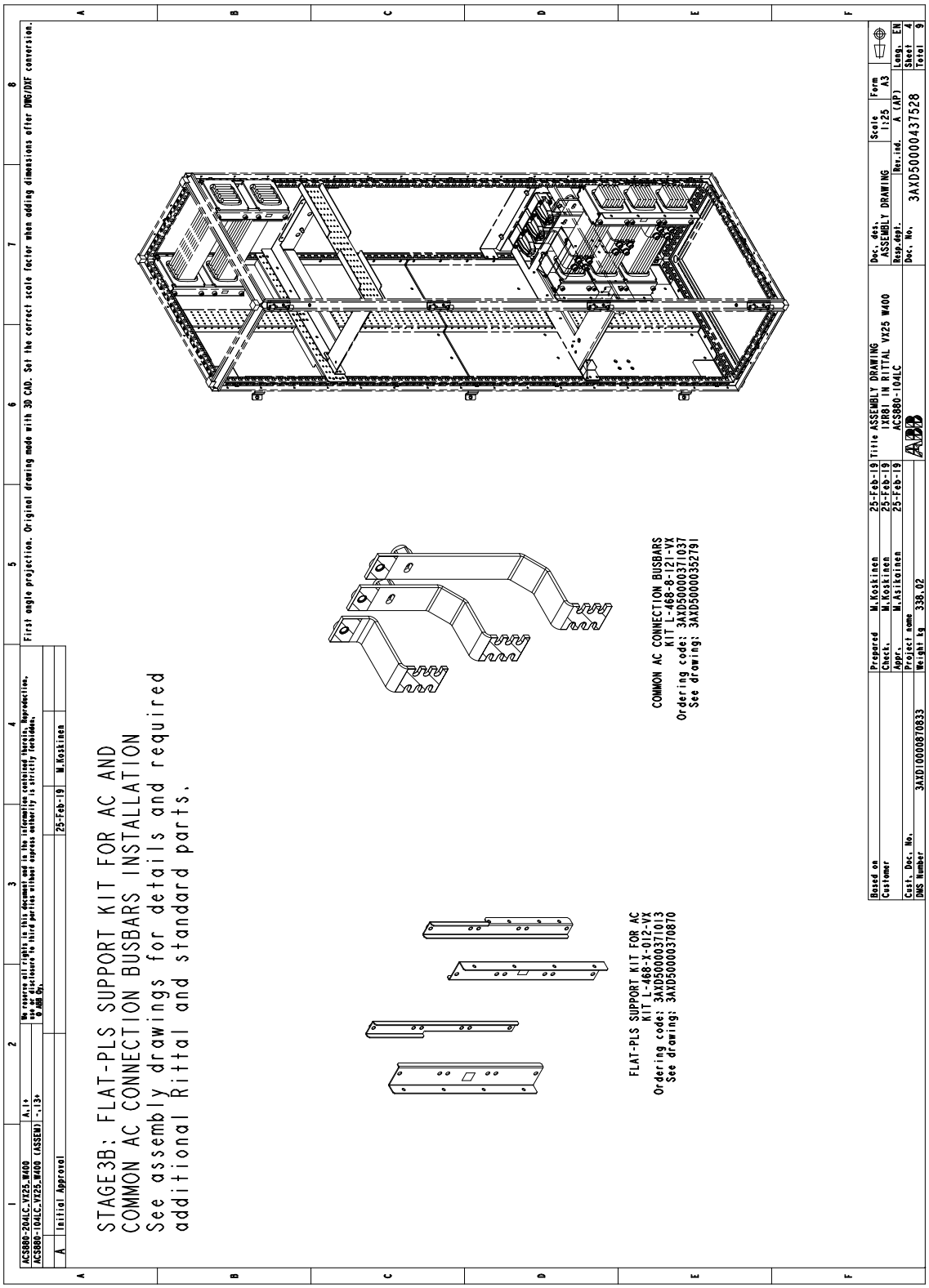

Stage 4: Fan, heat exchanger and cooling components

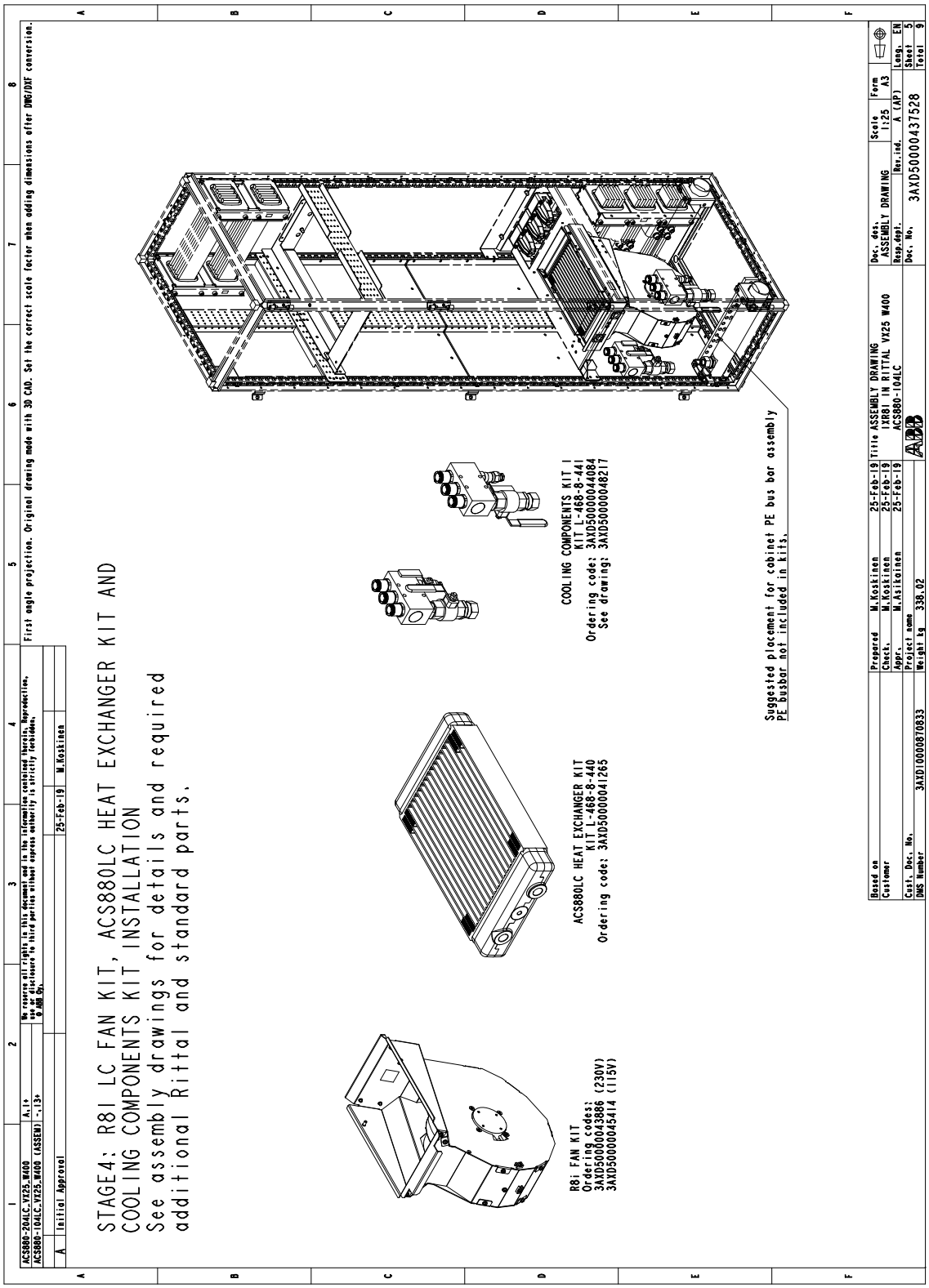

Stage 5A: Installation of DC busbars

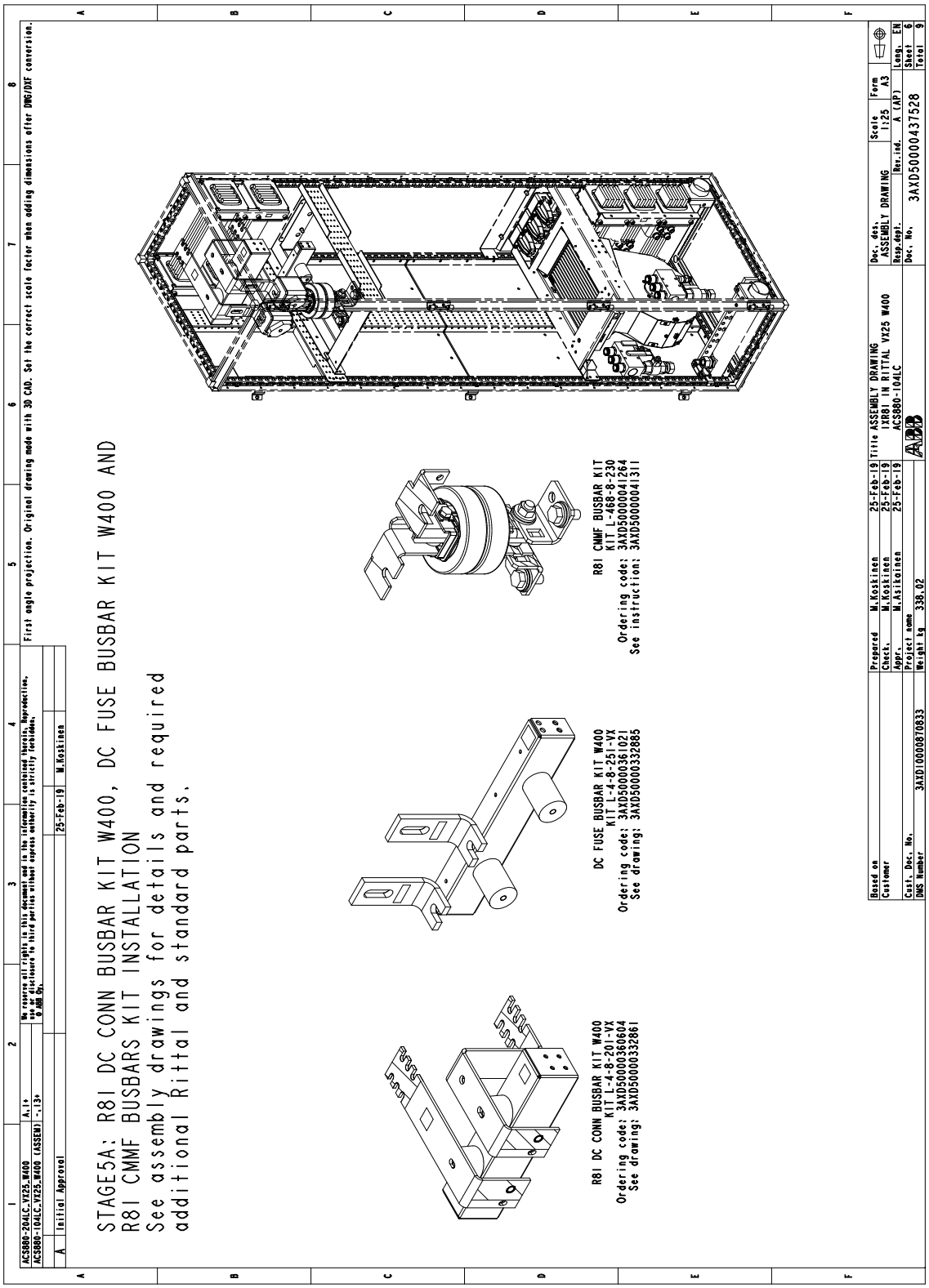

Stage 5B: Installation of DC switch, DC connection and common mode filter busbar kits

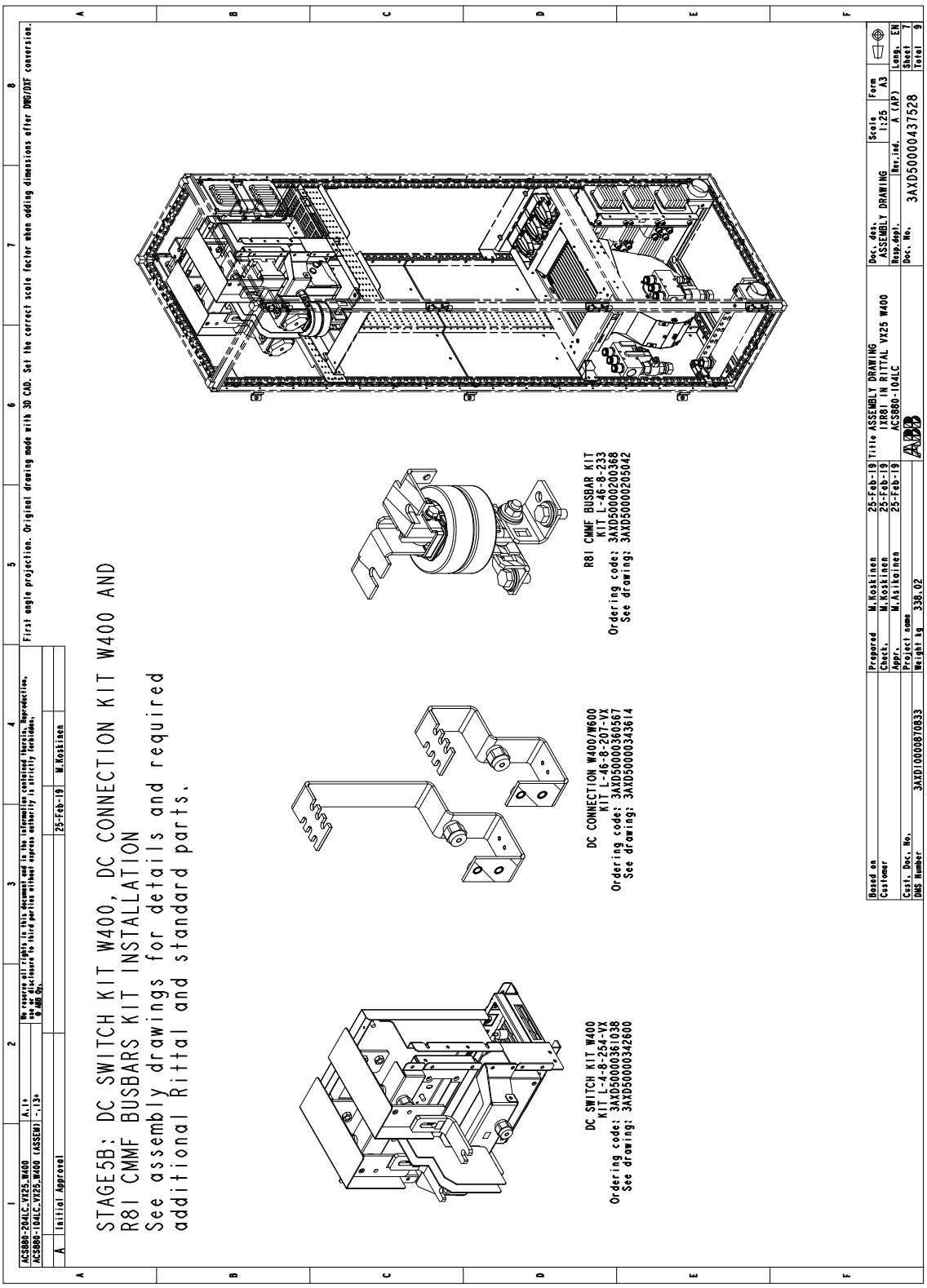

Stage 6: Module installation

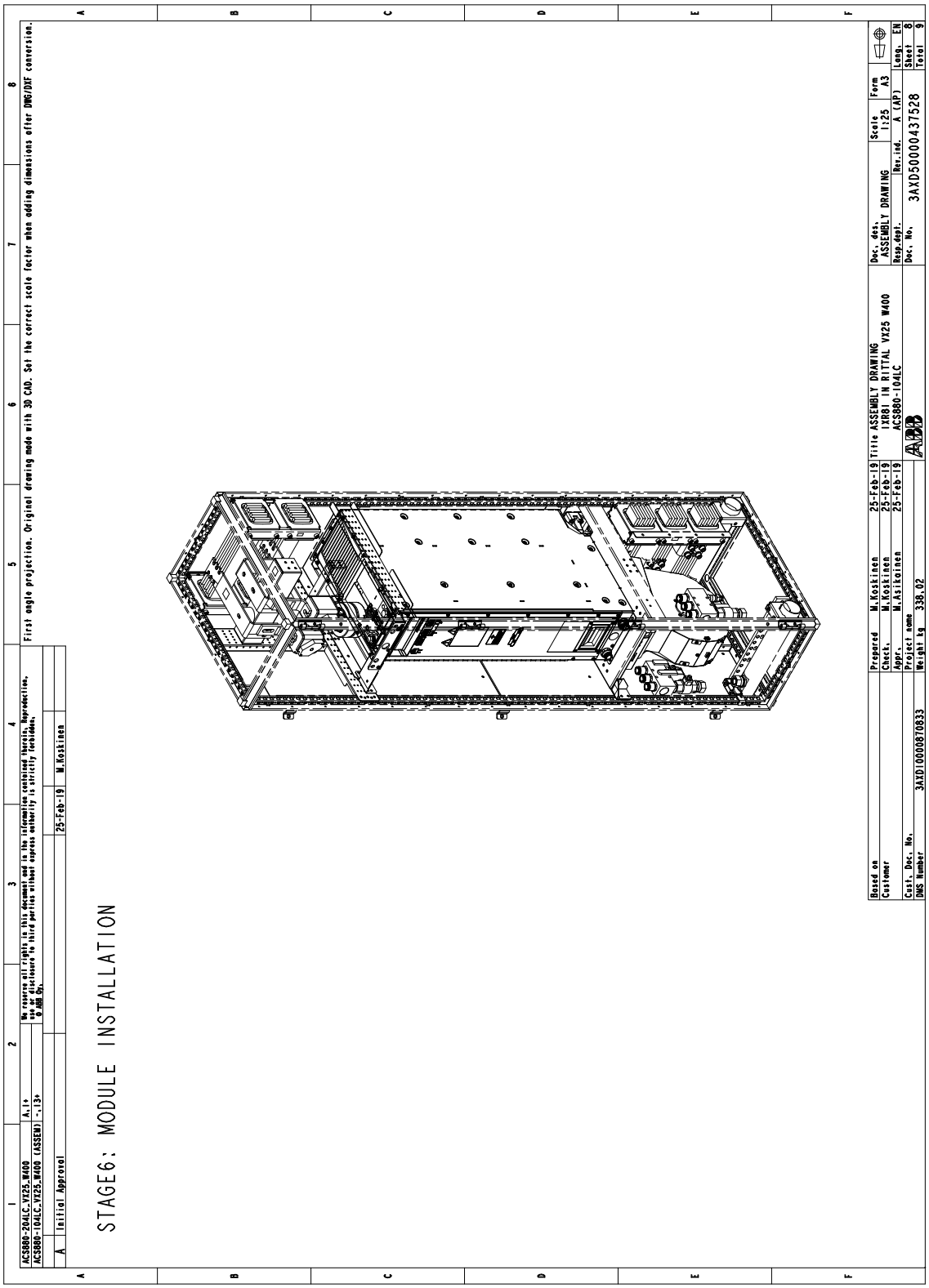

Stage 7: Installation of shrouding

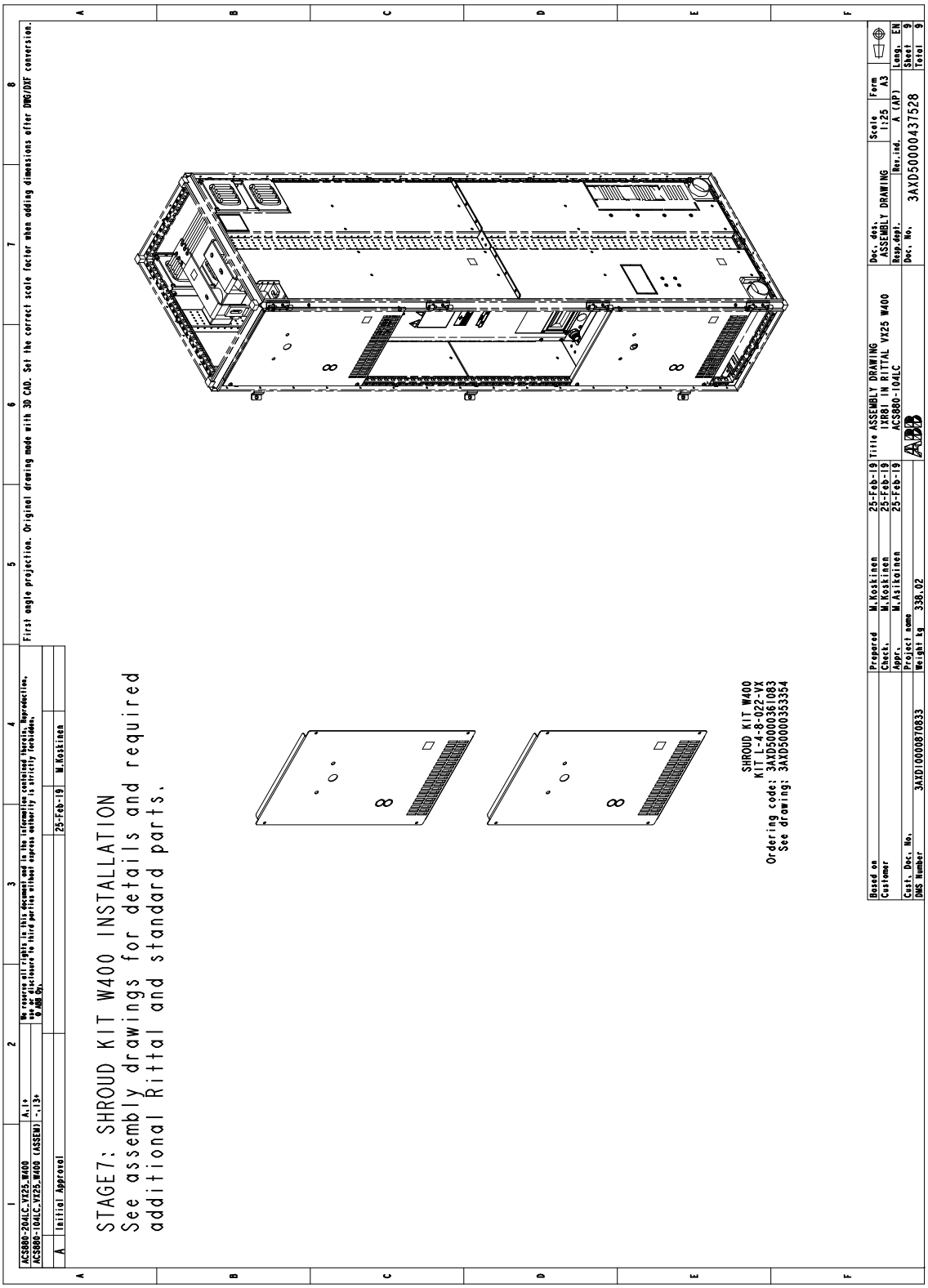

One R8i module in a 400 mm wide generic enclosure

Parts to be installed	Instruction code	Kit code	Kit ordering code
Cooling component kit	3AXD50000048217	L-468-8-441	3AXD50000044084
Quick connectors	3AUA0000118667	A-468-8-100	3AUA0000119227
Module mounting mechanics and cooling components	-	-	3AXD50000043886 / 3AXD50000045414
	-	L-4-8-301	3AXD50000043678
	-	L-468-8-440	3AXD50000041265
DC busbars (for configuration without DC switch) [1)]	3AXD50000540655	L-3-8-259	3AXD50000540150
	3AXD50000041311	L-468-8-230	3AXD50000041264
DC switch and busbars	3AXD50000342600	L-4-8-254-VX	3AXD50000361038
	3AXD50000205042	L-46-8-233	3AXD50000200368
Supply module	-	-	-
Shrouding	-	-	-

1) With this configuration, it is possible to install the kits to a 300 mm wide enclosure.

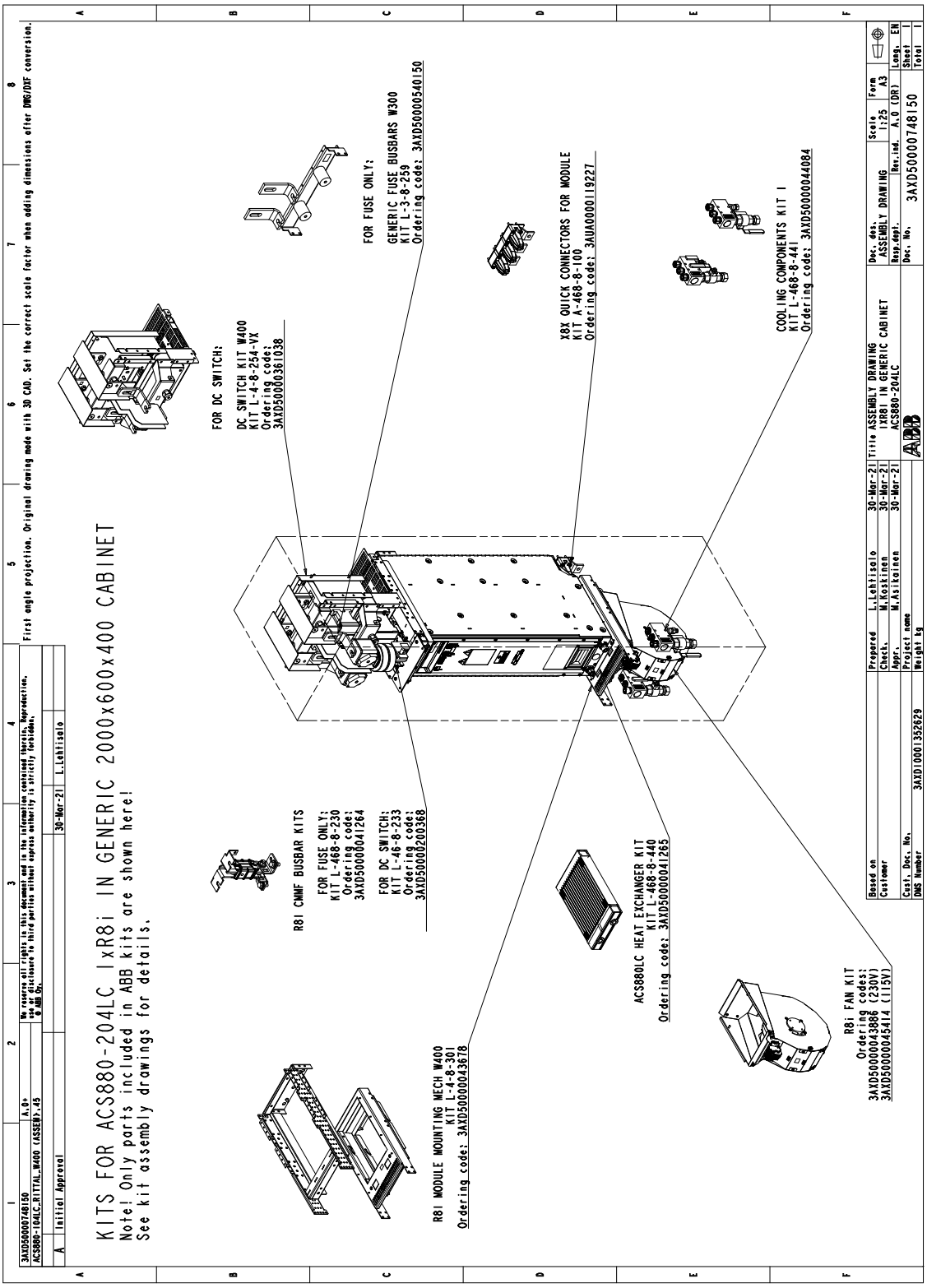
KITS FOR ACS880-204LC IxR8i IN GENERIC 2000x600x400 CABINET
Note! Only parts included in ABB kits are shown here!
See kit assembly drawings for details.
FOR DC SWITCH:
DC SWITCH KIT W400
KIT L-4-8-254-VX
Ordering code:
3AXD50000361038
FOR FUSE ONLY:
GENERIC FUSE BUSBARS W300
KIT L-3-8-259
Ordering code: 3AXD50000540150
X8X QUICK CONNECTORS FOR MODULE
KIT A-468-8-1003
Ordering code: 3AUA0000119227
COOLING COMPONENTS KIT I
KIT L-468-8-441
Ordering code: 3AXD50000044084
R8I CMMF BUSBAR KITS
FOR FUSE ONLY:
KIT L-468-8-230
Ordering code:
3AXD50000041264
FOR DC SWITCH:
KIT L-46-8-233
Ordering code:
3AXD50000200368
R8I MODULE MOUNTING MECH W400
KIT L-4-8-301
Ordering code: 3AXD50000043678
ACS880LC HEAT EXCHANGER KIT
KIT L-468-8-440
Ordering code: 3AXD50000041265
R8i FAN KIT
Ordering codes:
3AXD50000043886 (230V)
3AXD50000045414 (115V)
3AXD50000748150
IxR8I IN GENERIC CABINET
ACS880-204LC
ASSEMBLY DRAWING
Scale 1:25
Form A3
A.0 (DR)
Sheet 1
Total 1
3AXD10001352629
First angle projection. Original drawing made with 3D CAD. Set the correct scale factor when adding dimensions after DWG/DXF conversion.

Two R8i modules in a 600 mm wide Rittal VX25 enclosure

Layout drawing

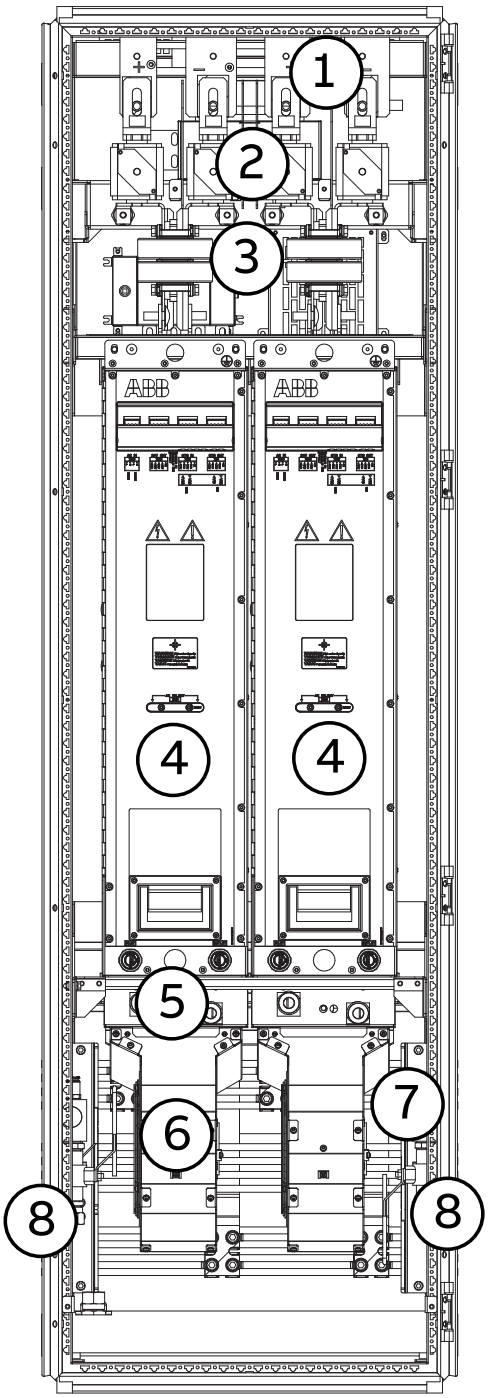

No.	Description
1	Common DC busbars (Rittal Flat-PLS)
2	DC fuses and optional DC switch
3	Common mode filter
4	IGBT supply module
5	Heat exchanger
6	Cooling fan
7	AC connection to LCL filter (Rittal Flat-PLS)
8	Inlet and outlet manifold with valves

Pipe routing example

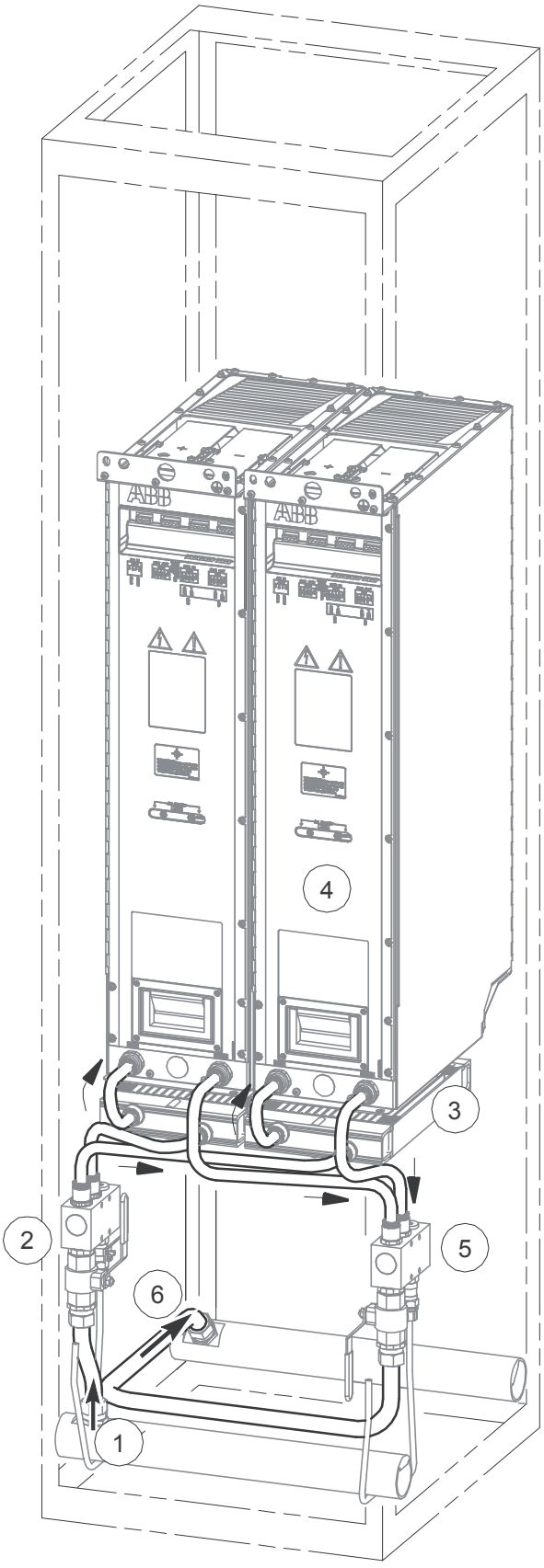

No.	Description
1	Coolant in
2	Inlet manifold with stop and drain valves
3	Heat exchanger
4	IGBT supply module
5	Outlet manifold with stop and drain valves
6	Coolant out

Installation stages

No.	Installation stage	Instruction code	Kit code	Kit ordering code
1	Baying parts	3AXD50000336340	-	-
	DC bus	3AXD50000333639	A-468-X-001-VX	3AXD50000333387
2	Side plate, module mounting mechanics and quick connectors	3AXD50000327591	L-468-8-020-VX	3AXD50000360543
		3AXD50000330201	L-6-8-302-VX	3AXD50000361090
		3AUA0000118667	A-468-8-100	3AUA0000119227
3	Flat-PLS support kit for AC and common AC connection busbars	3AXD50000370870	L-468-X-012-VX	3AXD50000371013
		3AXD50000352791	L-468-8-121-VX	3AXD50000371037
4	Fan, heat exchanger and cooling components	-	-	3AXD50000043886 / 3AXD50000045414
		-	L-468-8-440	3AXD50000041265
		3AXD50000048258	L-468-8-442	3AXD50000044182
5A	DC busbars	3AXD50000332229	L-6-8-202-VX	3AXD50000361106
		3AXD50000332106	L-6-8-252-VX	3AXD50000361229
		3AXD50000041311	L-468-8-230	3AXD50000041264
5B	DC switch, DC connection and common mode filter busbar kits	3AXD50000338740	L-6-8-255-VX	3AXD50000361243
		3AXD50000343614	L-46-8-207-VX	3AXD50000360567
		3AXD50000205042	L-46-8-233	3AXD50000200368
6	Module installation	-	-	-
7	Shrouding	3AXD50000353521	L-6-8-023-VX	3AXD50000361267

Overview of kits

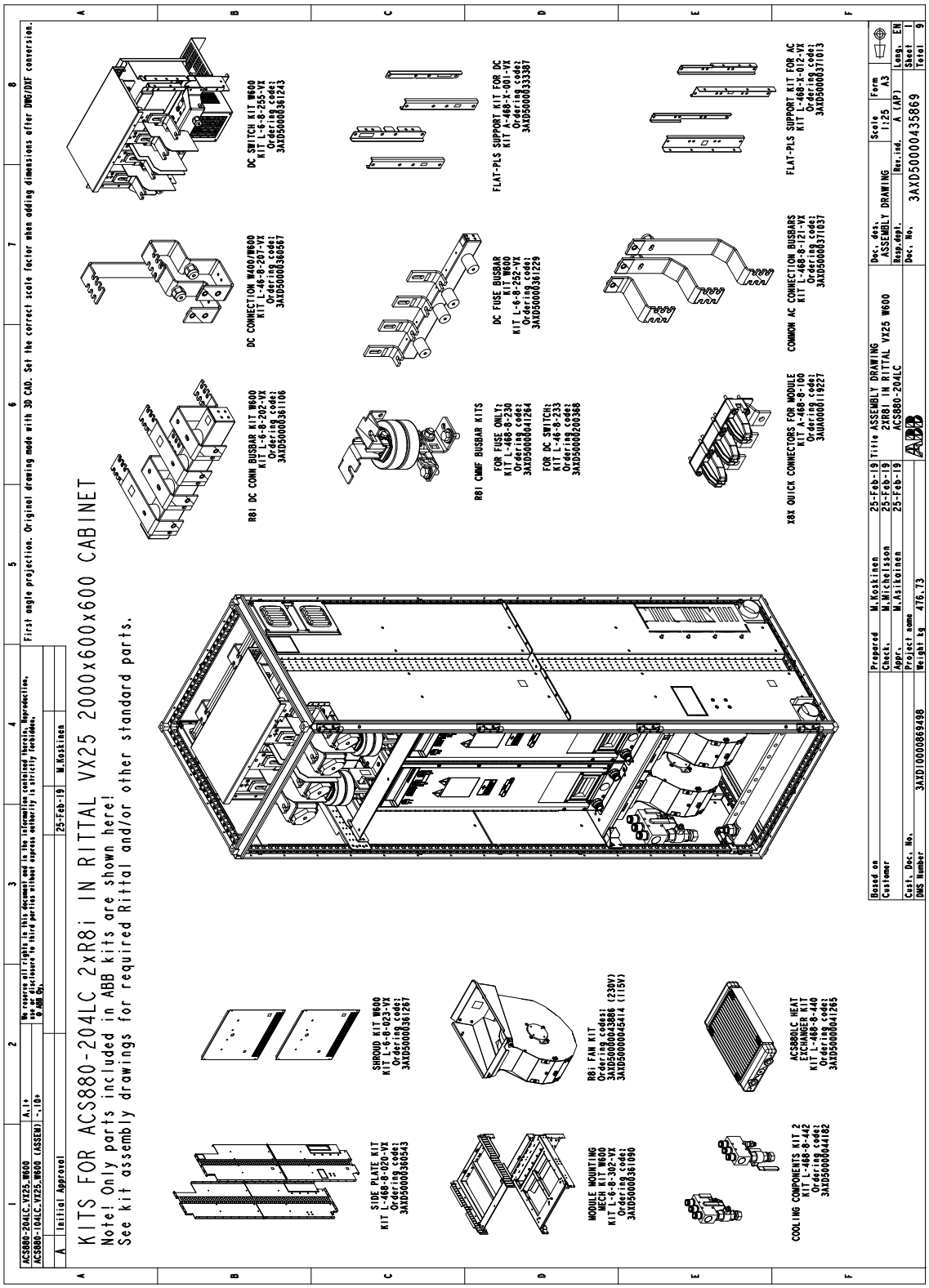

Stage 1: Installation of common parts

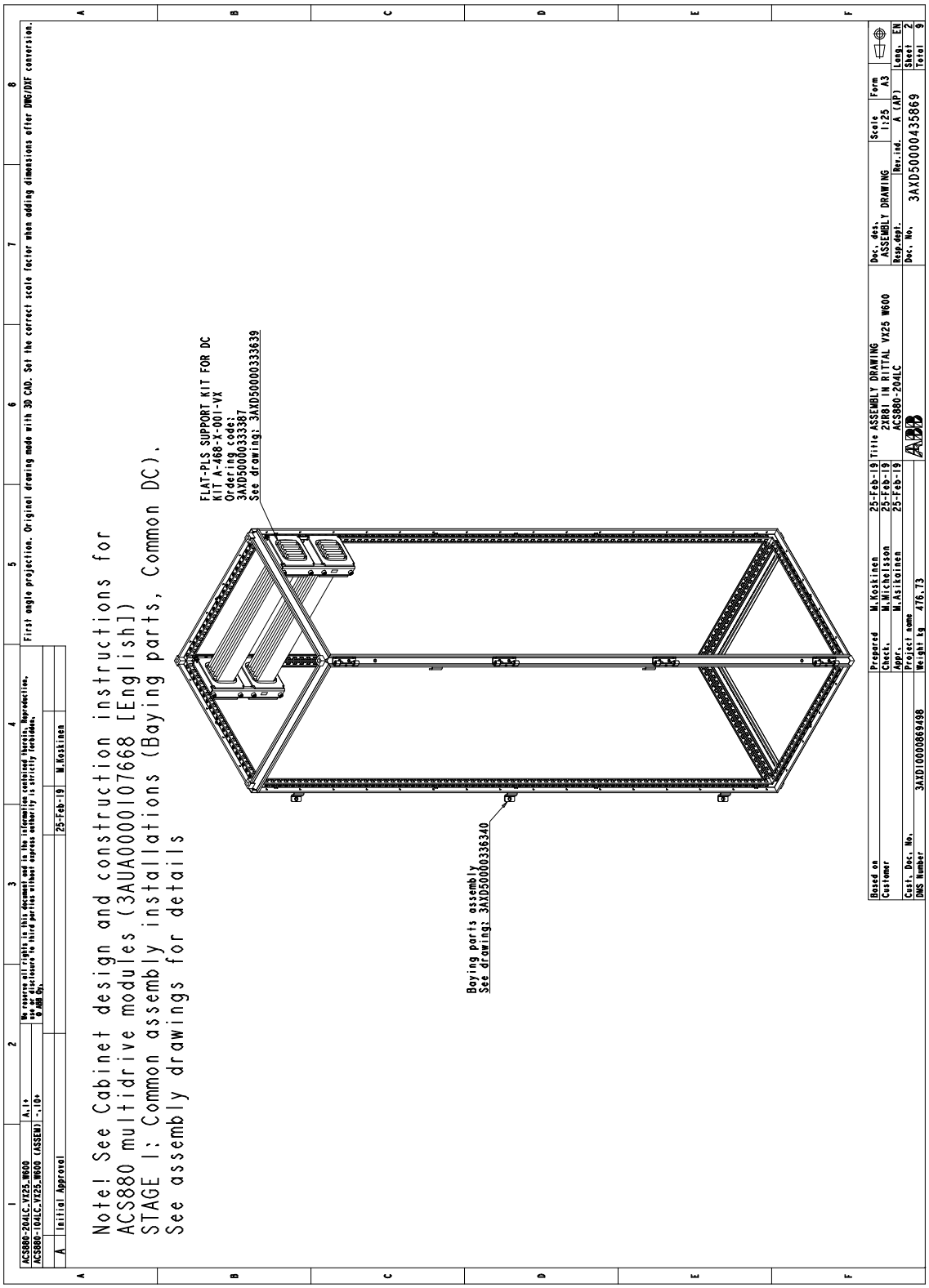

Stage 2: Side plate, module mounting mechanics and quick connectors

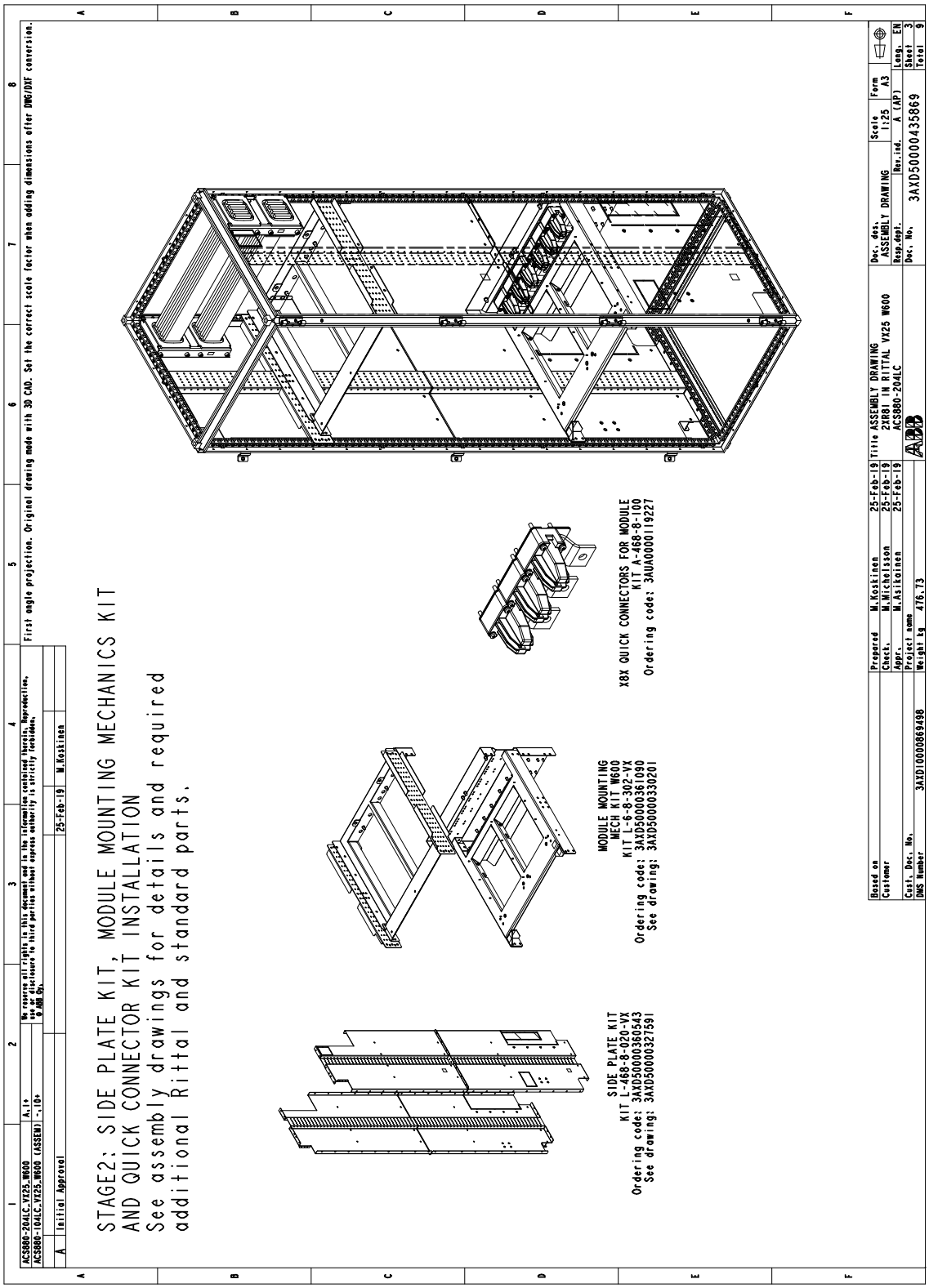

Stage 3: Flat-PLS support kit for AC and common AC connection busbars

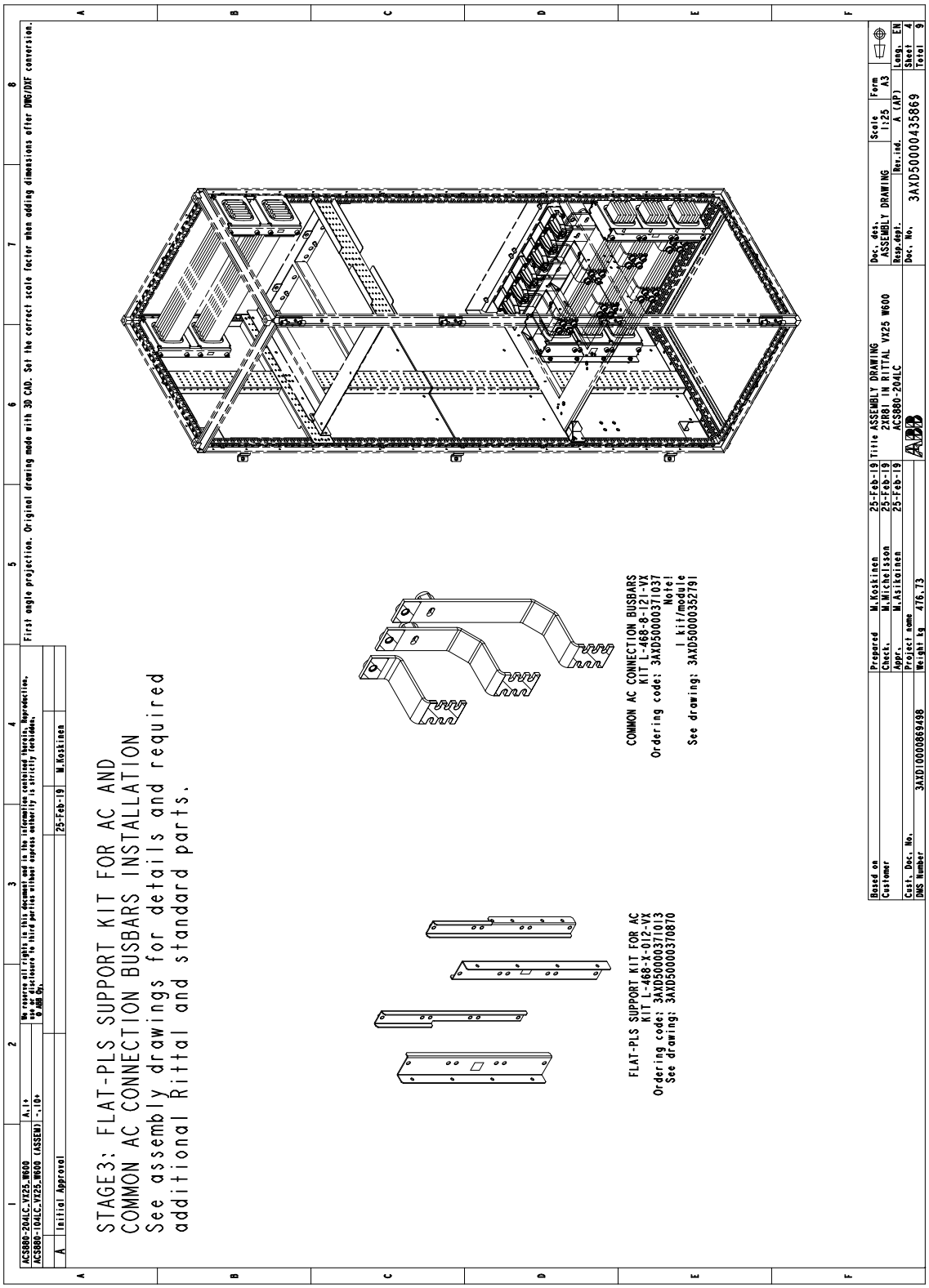

Stage 4: Fan, heat exchanger and cooling components

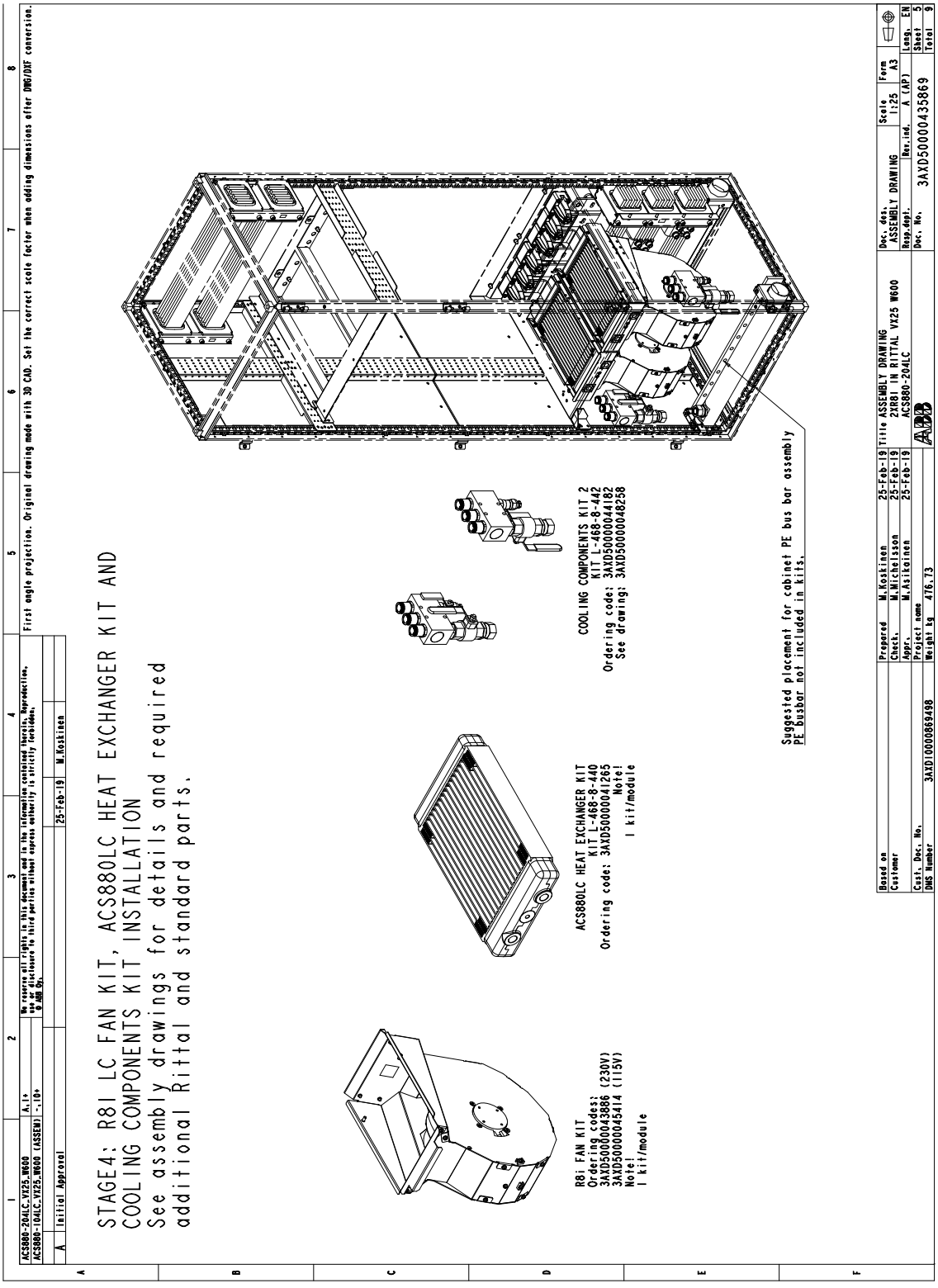

Stage 5A: Installation of DC busbars

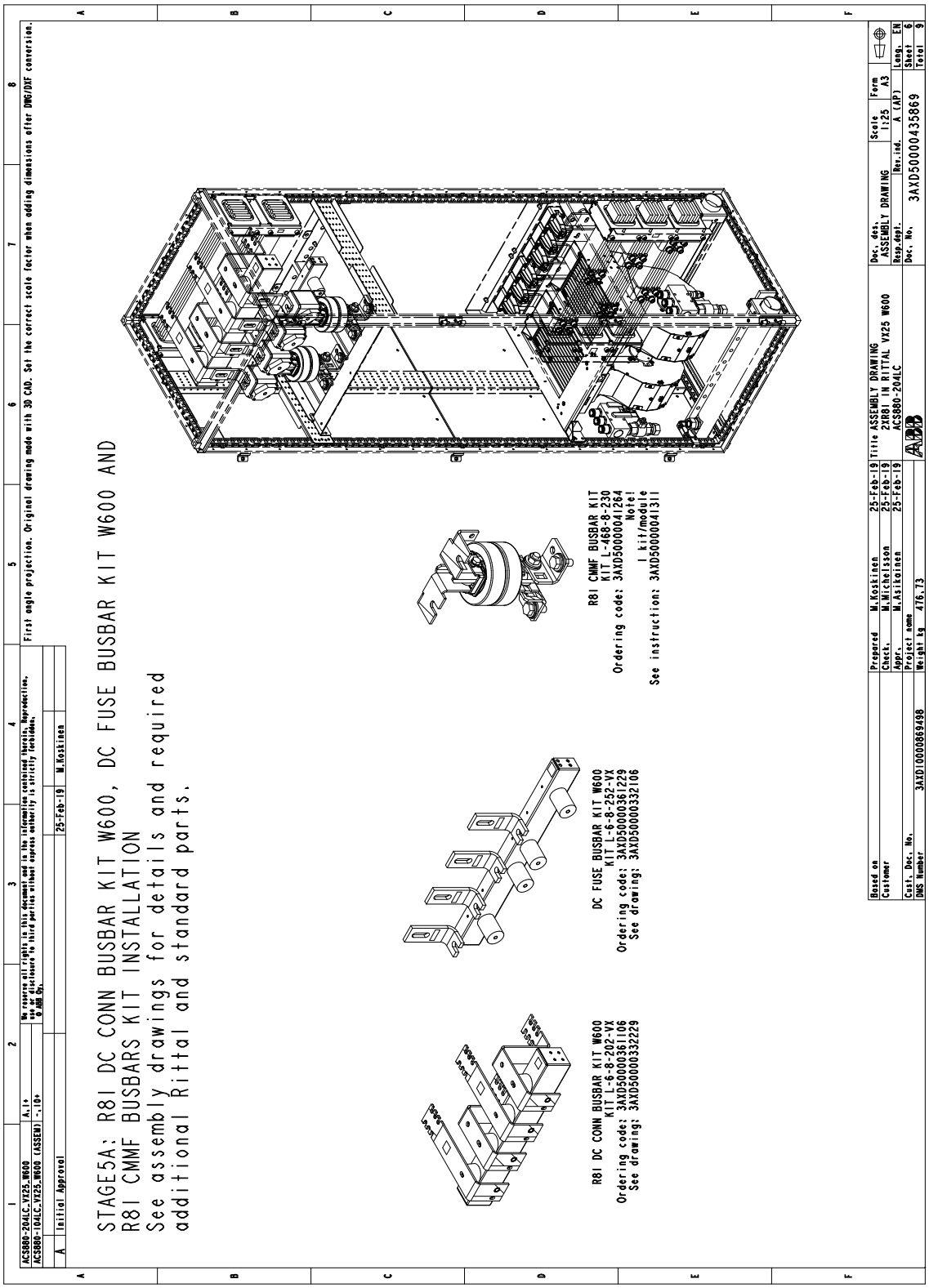

Stage 5B: Installation of DC switch, DC connection and common mode filter busbar kits

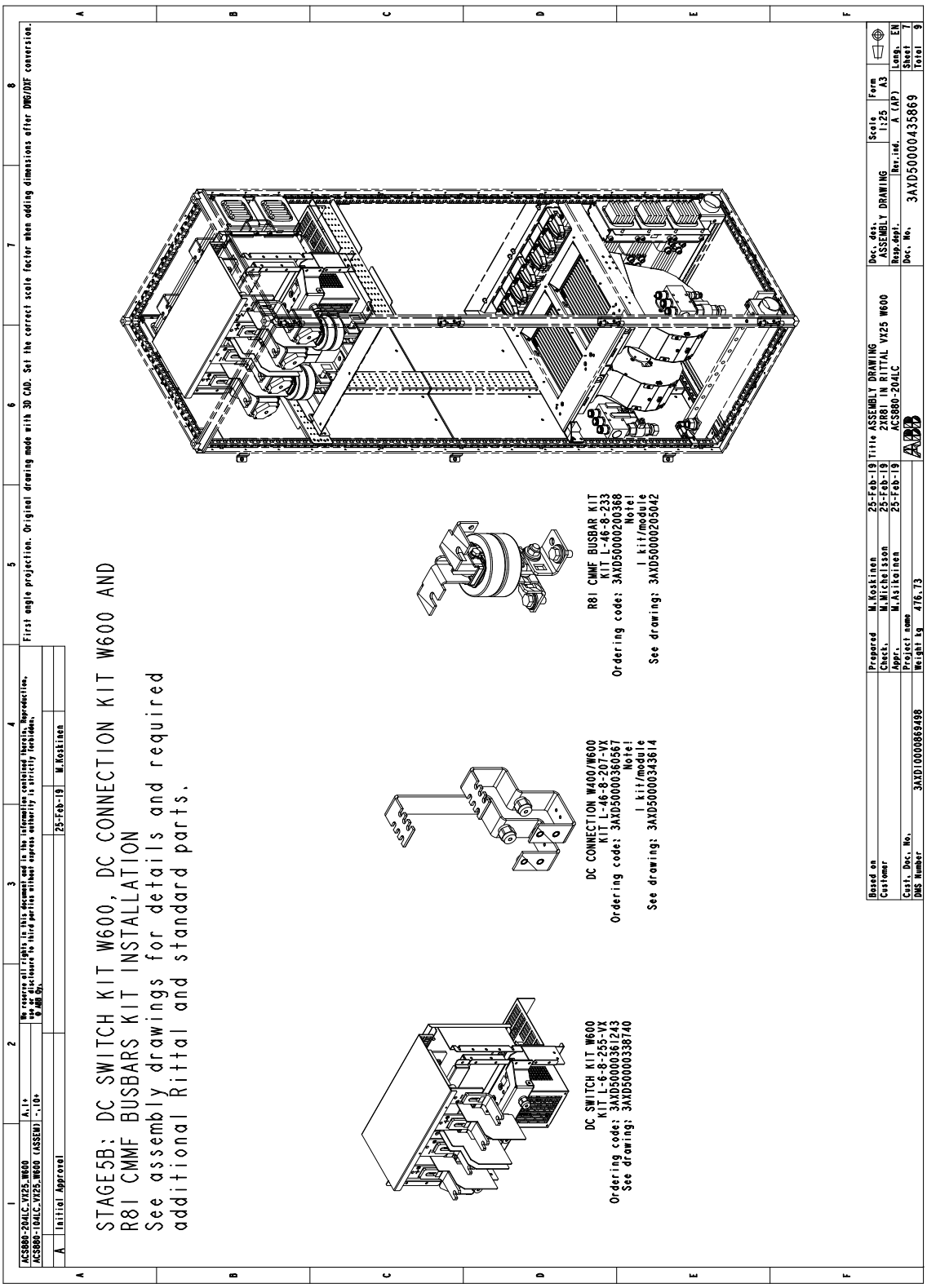

Stage 6: Module installation

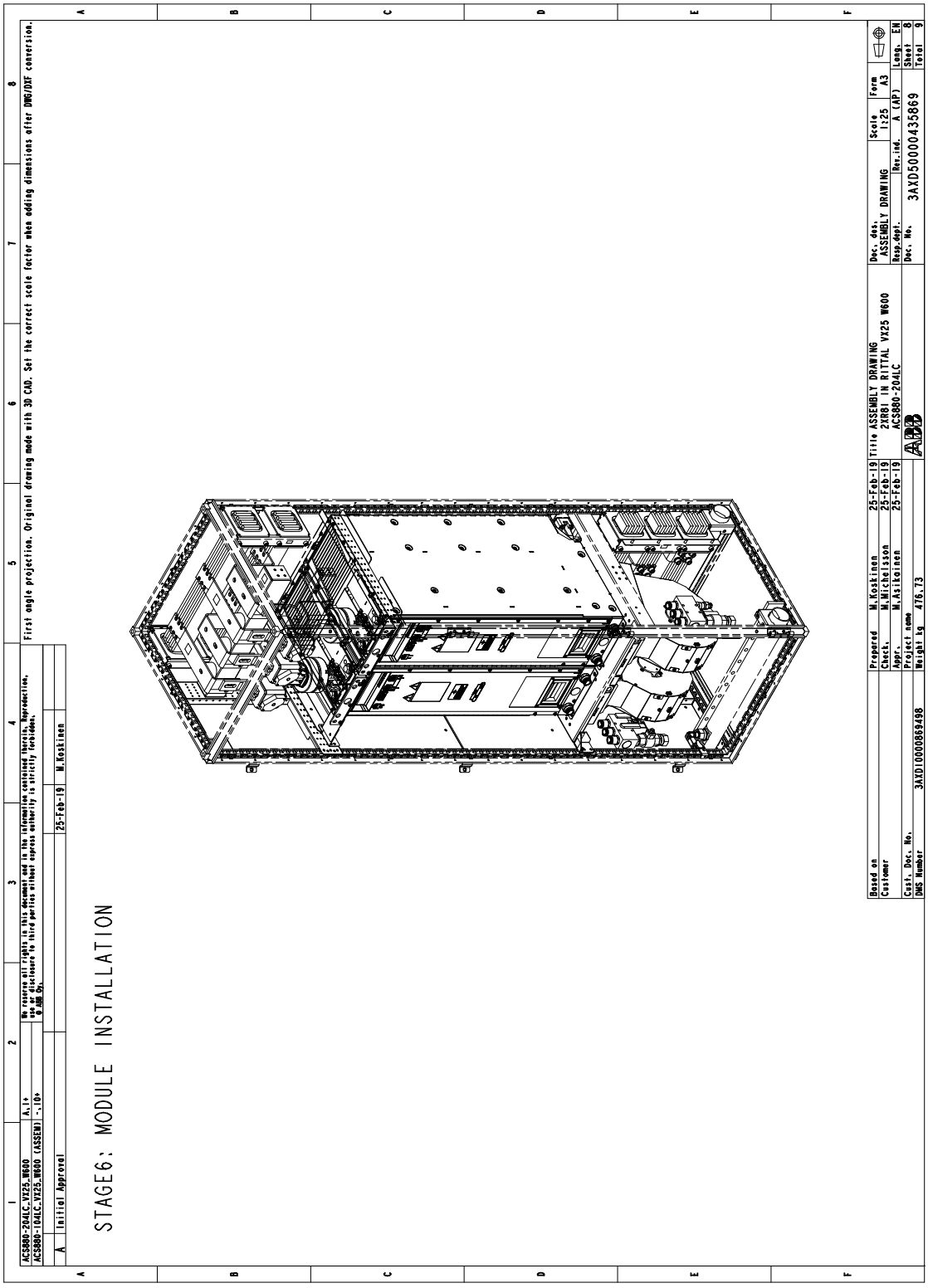

Stage 7: Installation of shrouding

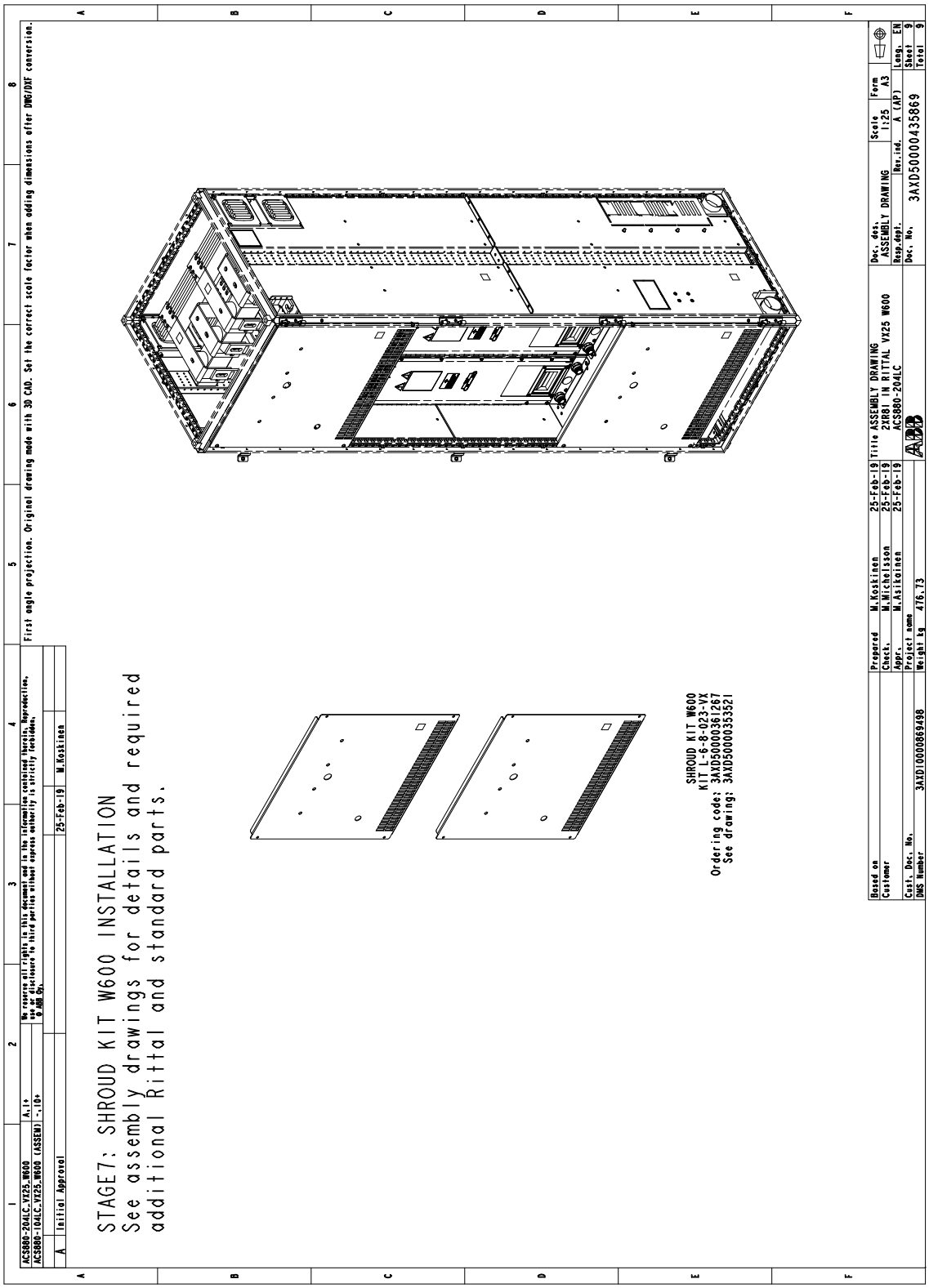

Two R8i modules in a 600 mm wide generic enclosure

Parts to be installed	Instruction code	Kit code	Kit ordering code
Cooling component kit	3AXD50000048258	L-468-8-442	3AXD50000044182
Quick connectors	3AUA0000118667	A-468-8-100	3AUA0000119227
Module mounting mechanics and cooling components	3AXD50000041836	L-6-8-302	3AXD50000041710
	-	-	3AXD50000043886 / 3AXD50000045414
		L-468-8-440	3AXD50000041265
DC busbars (for configuration without DC switch) [1)]	3AXD50000540723	L-5-8-260	3AXD50000540167
	3AXD50000041311	L-468-8-230	3AXD50000041264
DC switch and busbars	3AXD50000338740	L-6-8-255-VX	3AXD50000361243
	3AXD50000205042	L-46-8-233	3AXD50000200368
Supply modules	-	-	-
Shrouding	-	-	-

1) With this configuration, it is possible to install the kits to a 500 mm wide enclosure.

3AXD50000748174	A.0+	We reserve all rights in this document and in the information contained therein. Reproduction, use or disclosure to third parties without express authority is strictly forbidden. © ABB Oy.					First angle projection. Original drawing made with 3D CAD. Set the correct scale factor when adding dimensions after DWG/DXF conversion.
ACS880-104LC_RITTAL_W600_V2 (ASSEMB							
A	Initial Approval		30-Mar-21	L.Lehtisalo			

KITS FOR ACS880-204LC 2xR8i IN GENERIC 2000x600x600 CABINET

Note! Only parts included in ABB kits are shown here!
See kit assembly drawings for details.

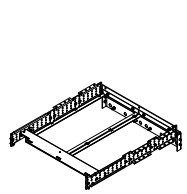

R8I MODULE MOUNTING MECH W600
KIT L-6-8-302
Ordering code: 3AXD50000041710

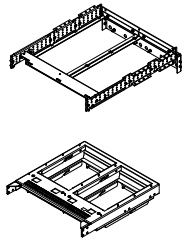

R8I CMMF BUSBAR KITS

FOR FUSE ONLY:
KIT L-468-8-230
Ordering code:
3AXD50000041264

FOR DC SWITCH:
KIT L-46-8-233
Ordering code:
3AXD50000200368

1 kit/module

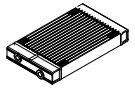

ACS880LC HEAT EXCHANGER KIT
KIT L-468-8-440
Ordering code: 3AXD50000041265
1 kit/module

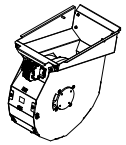

R8i FAN KIT
Ordering codes:
3AXD50000043886 (230V)
3AXD50000045414 (115V)
1 kit/module

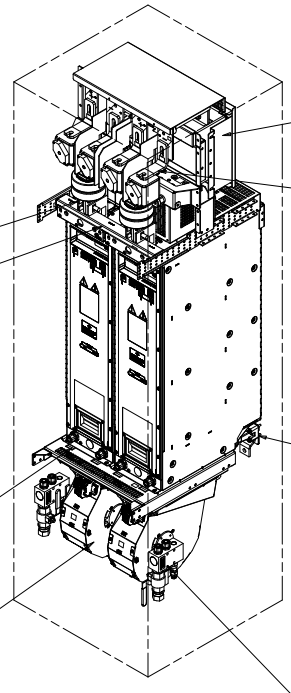

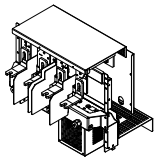

FOR DC SWITCH:

DC SWITCH KIT W600
KIT L-6-8-255-VX
Ordering code:
3AXD50000361243

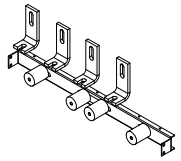

FOR FUSE ONLY:

GENERIC FUSE BUSBARS W500
KIT L-5-8-260
Ordering code: 3AXD50000540167

X8X QUICK CONNECTORS FOR MODULE
KIT A-468-8-100
Ordering code: 3AUA0000119227
1 kit/module

COOLING COMPONENTS KIT 2
KIT L-468-8-442
Ordering code: 3AXD50000044182

Based on		Prepared	L.Lehtisalo	30-Mar-21	Title ASSEMBLY DRAWING	Doc. des.	Scale	Form	
Customer		Check.	M.Koskinen	30-Mar-21	2XR8I IN GENERIC CABINET	ASSEMBLY DRAWING	1:25	A3	
		Appr.	M.Asikainen	30-Mar-21	ACS880-204LC	Resp.dept.	Rev.ind.	A.0 (DR)	Lang. EN
Cust. Doc. No.		Project name			ABB	Doc. No.	3AXD50000748174		Sheet 1
DMS Number	3AXD10001352873	Weight kg	14879883.85						Total 1

Three R8i modules in a 800 mm wide Rittal VX25 enclosure

Note: 3×R8i design with DC switches is not suitable for UL installations.

Layout drawing

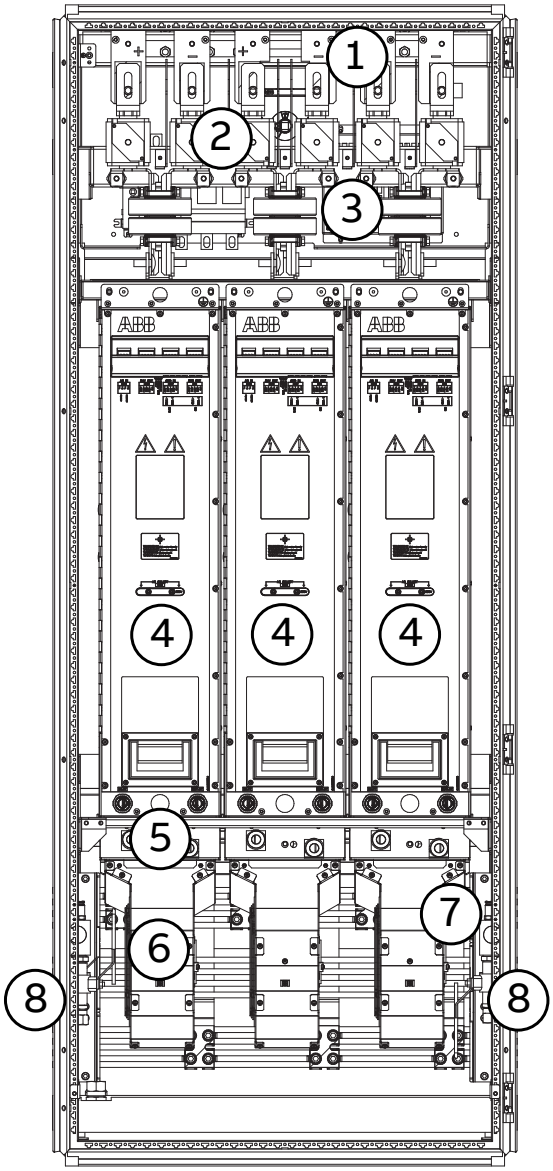

No.	Description
1	Common DC busbars (Rittal Flat-PLS)
2	DC fuses and optional DC switch
3	Common mode filter
4	IGBT supply module
5	Heat exchanger
6	Cooling fan
7	AC connection to LCL filter (Rittal Flat-PLS)
8	Inlet and outlet manifold with valves

Pipe routing example

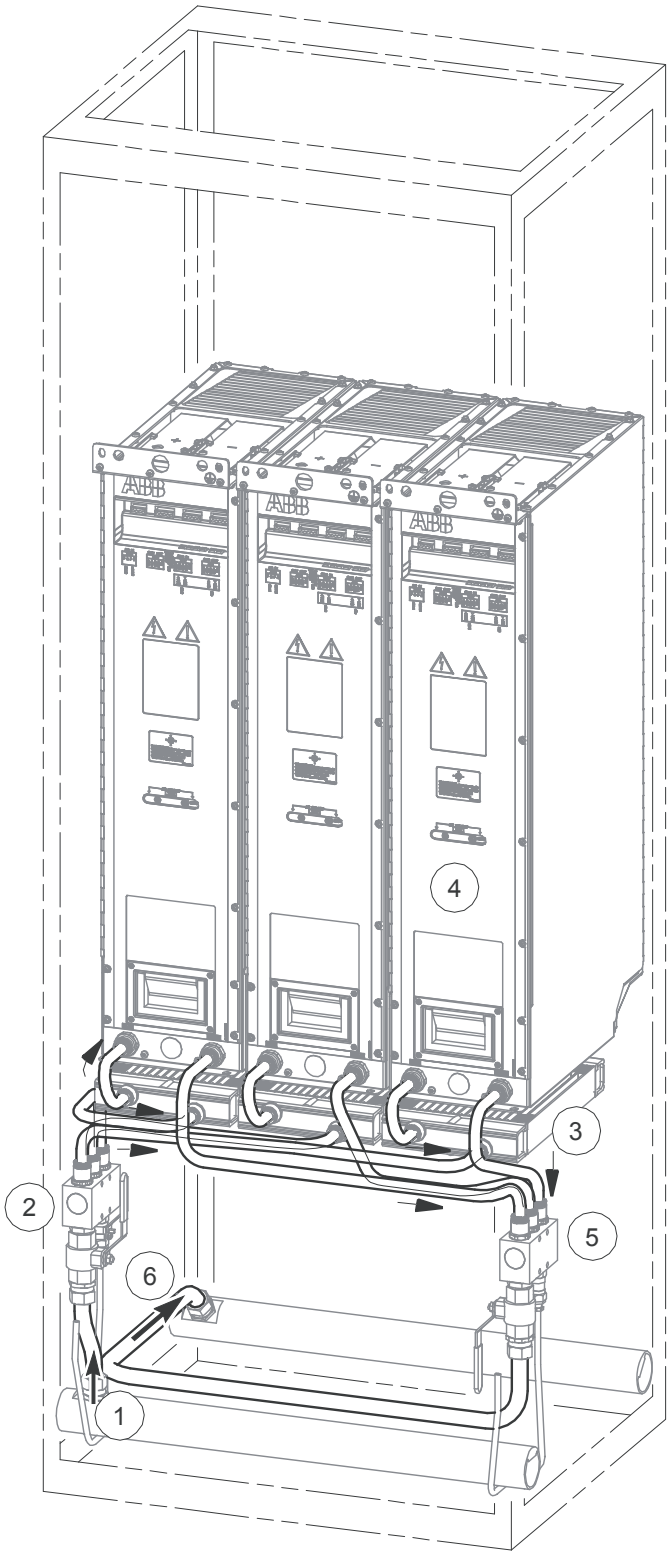

No.	Description
1	Coolant in
2	Inlet manifold with stop and drain valves
3	Heat exchanger
4	IGBT supply module
5	Outlet manifold with stop and drain valves
6	Coolant out

Installation stages

No.	Installation stage	Instruction code	Kit code	Kit ordering code
1	Baying parts	3AXD50000336340	-	-
	DC bus	3AXD50000333639	A-468-X-001-VX	3AXD50000333387
2	Side plate, module mounting mechanics and quick connectors	3AXD50000327591	L-468-8-020-VX	3AXD50000360543
		3AXD50000329502	L-8-8-303-VX	3AXD50000361274
		3AUA0000118667	A-468-8-100	3AUA0000119227
3	Flat-PLS support kit for AC and common AC connection busbars	3AXD50000370870	L-468-X-012-VX	3AXD50000371013
		3AXD50000352791	L-468-8-121-VX	3AXD50000371037
4	Fan, heat exchanger and cooling components	-	-	3AXD50000043886 / 3AXD50000045414
		-	L-468-8-440	3AXD50000041265
		3AXD50000048283	L-468-8-443	3AXD50000048136
5A	DC busbars	3AXD50000331567	L-8-8-203-VX	3AXD50000361281
		3AXD50000331765	L-8-8-253-VX	3AXD50000361298
		3AXD50000041311	L-468-8-230	3AXD50000041264
5B	DC switch, DC connection and common mode filter busbar kits	3AXD50000336999	L-8-8-256-VX	3AXD50000361304
		3AXD50000344185	L-8-8-208-VX	3AXD50000360574
		3AXD50000205226	L-8-8-234	3AXD50000200337
6	Module installation	-	-	-
7	Shrouding	3AXD50000353125	L-8-8-024-VX	3AXD50000361427

Overview of kits

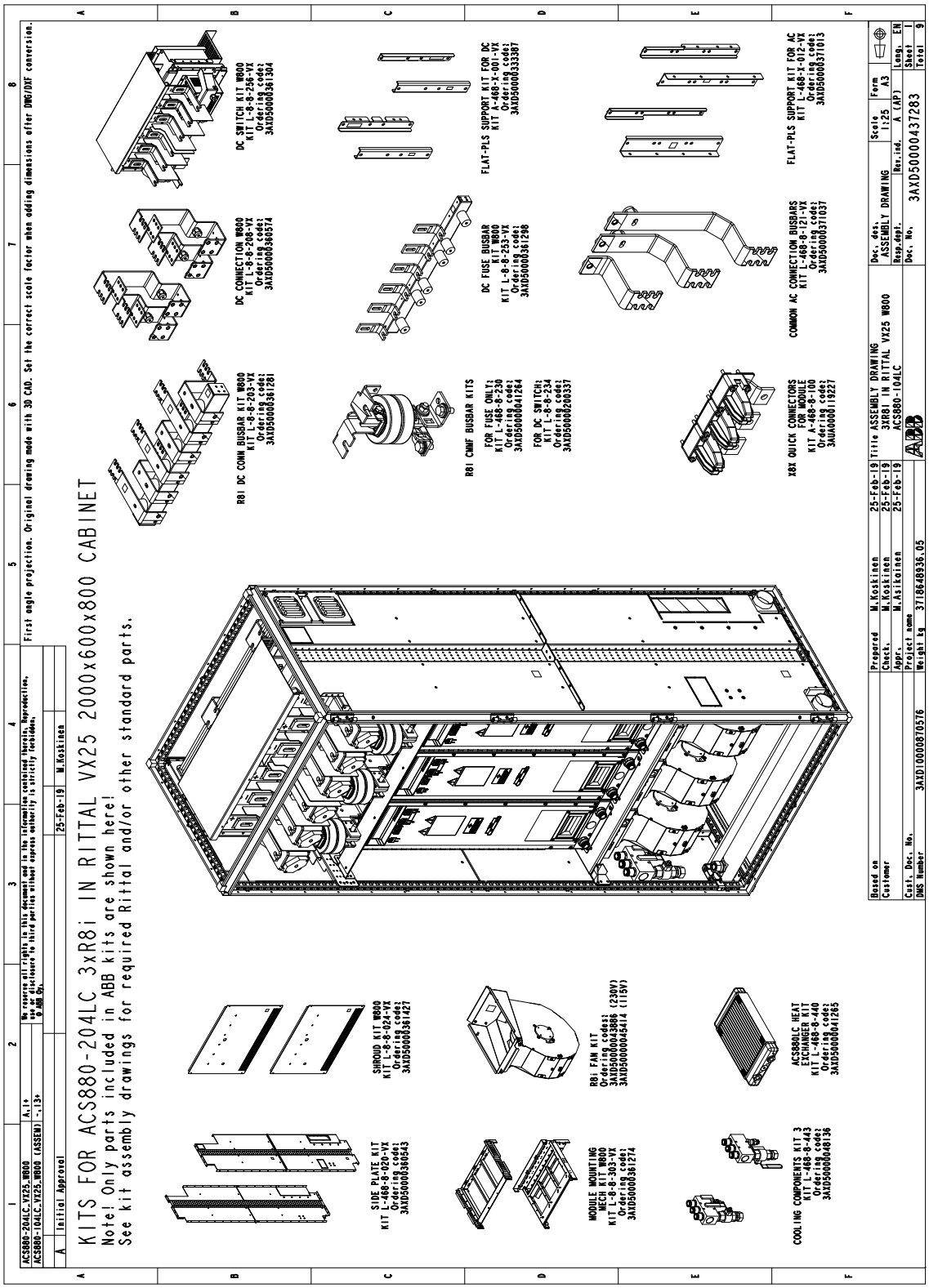

Stage 1: Installation of common parts

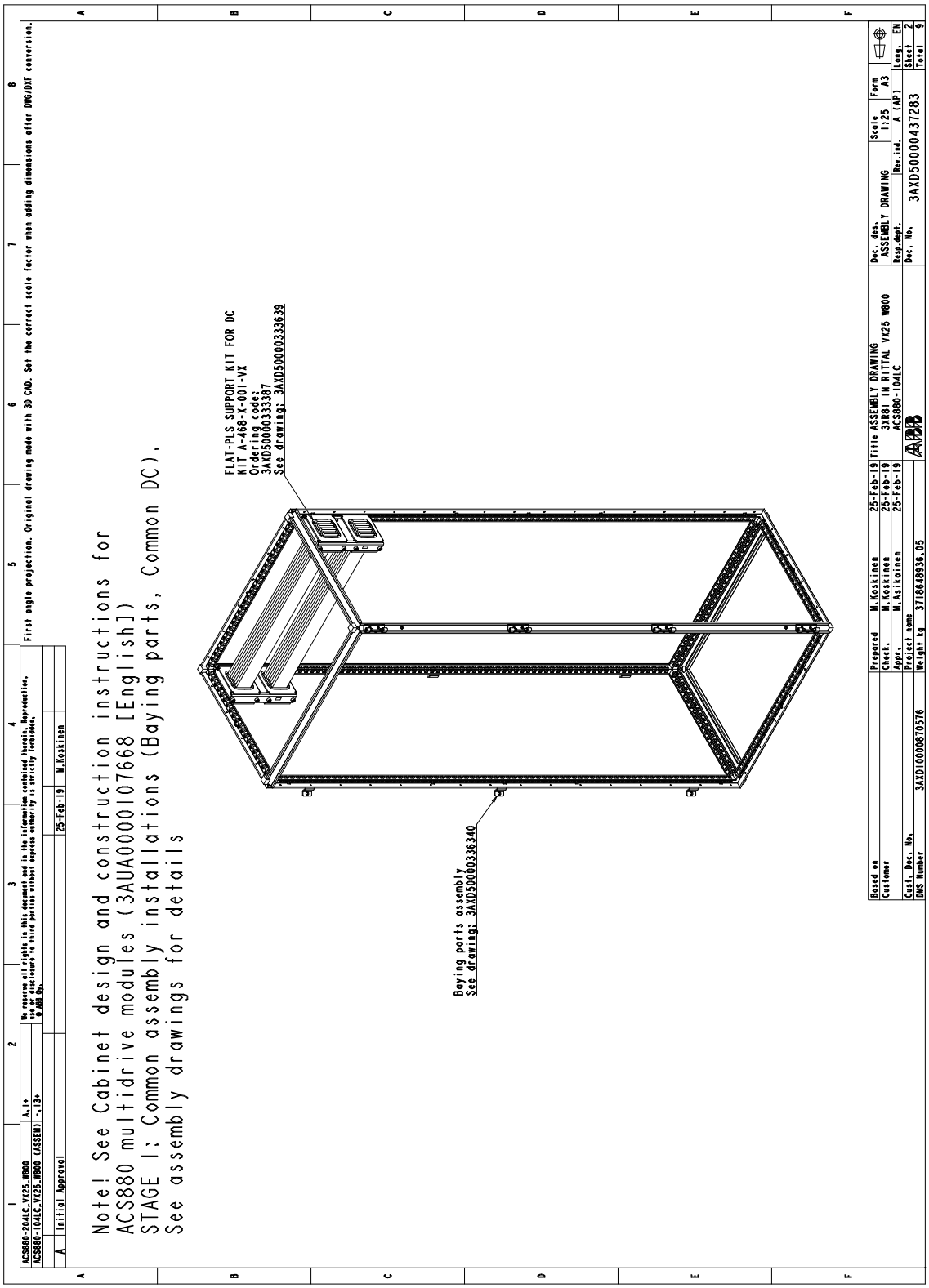

Stage 2: Side plate, module mounting mechanics and quick connectors

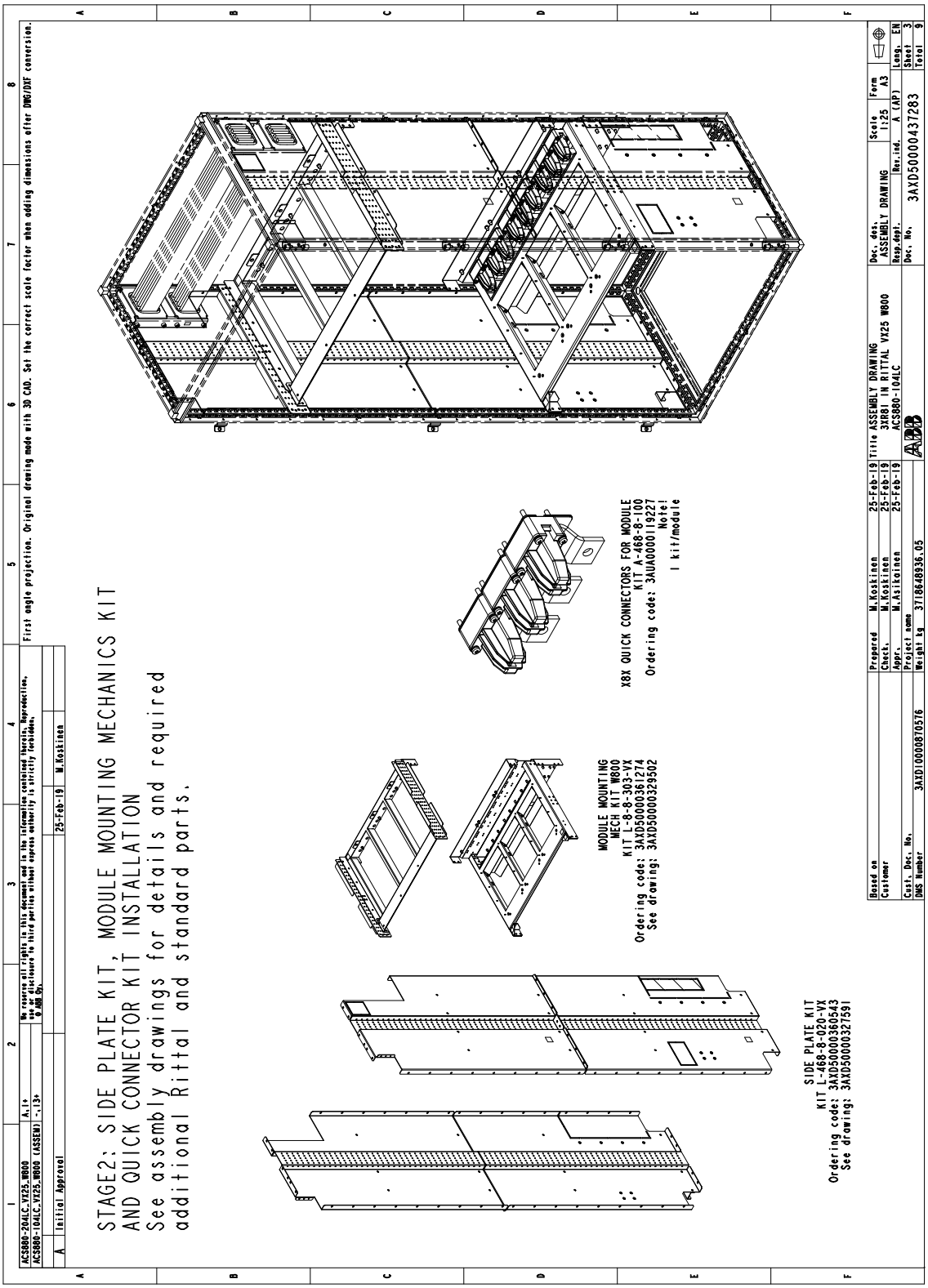

Stage 3: Flat-PLS support kit for AC and common AC connection busbars

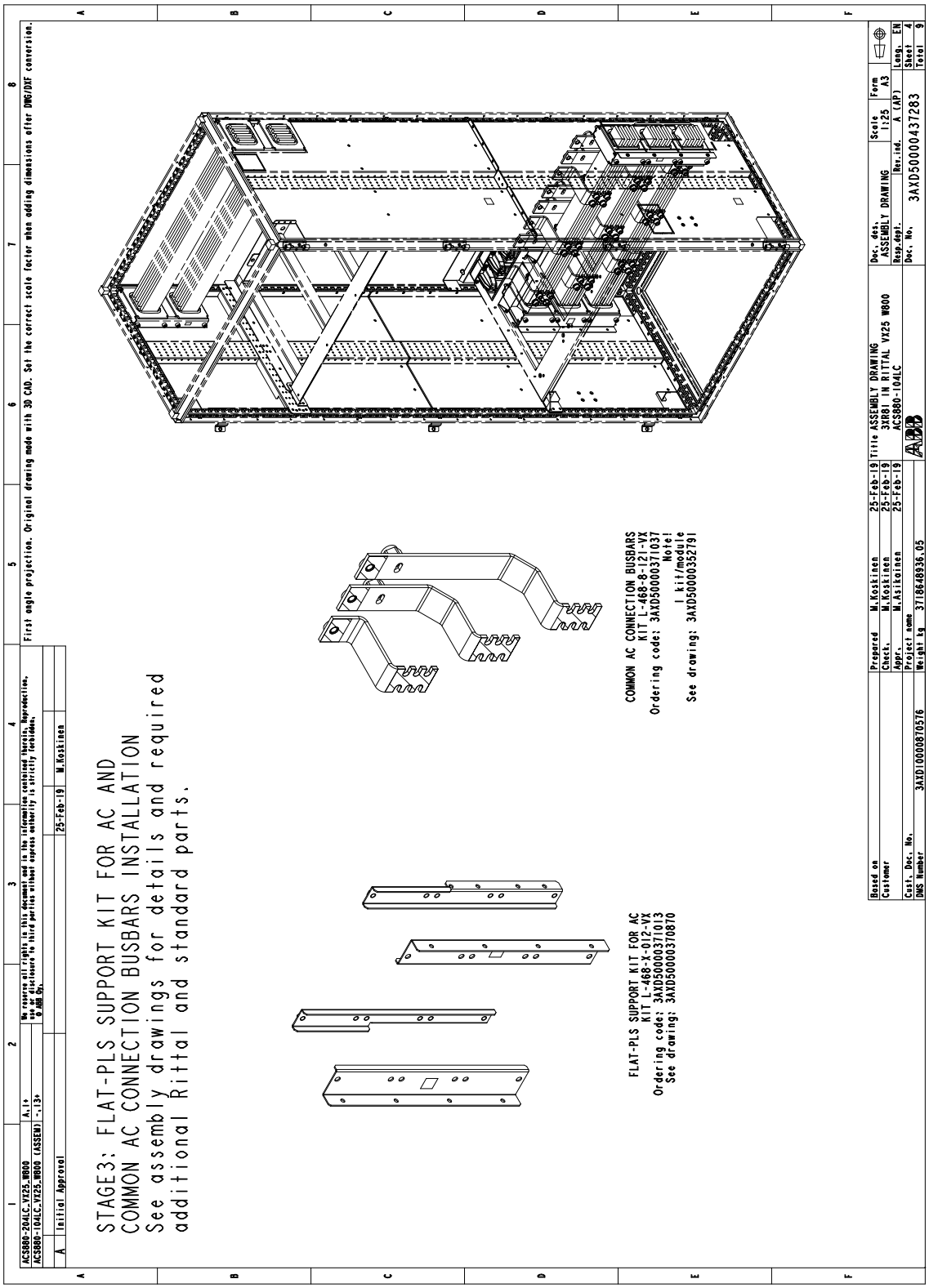

Stage 4: Fan, heat exchanger and cooling components

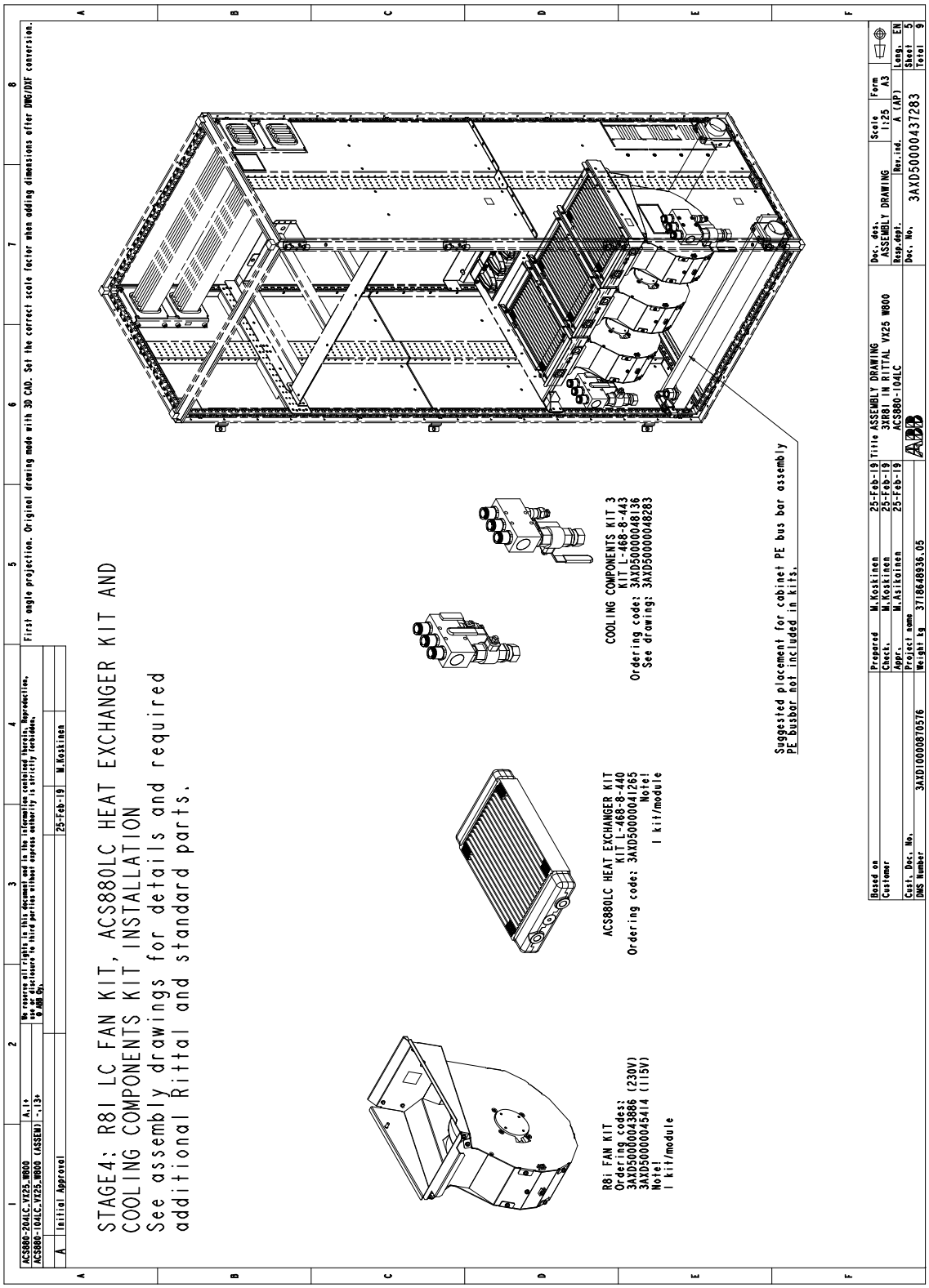

Stage 5A: Installation of DC busbars

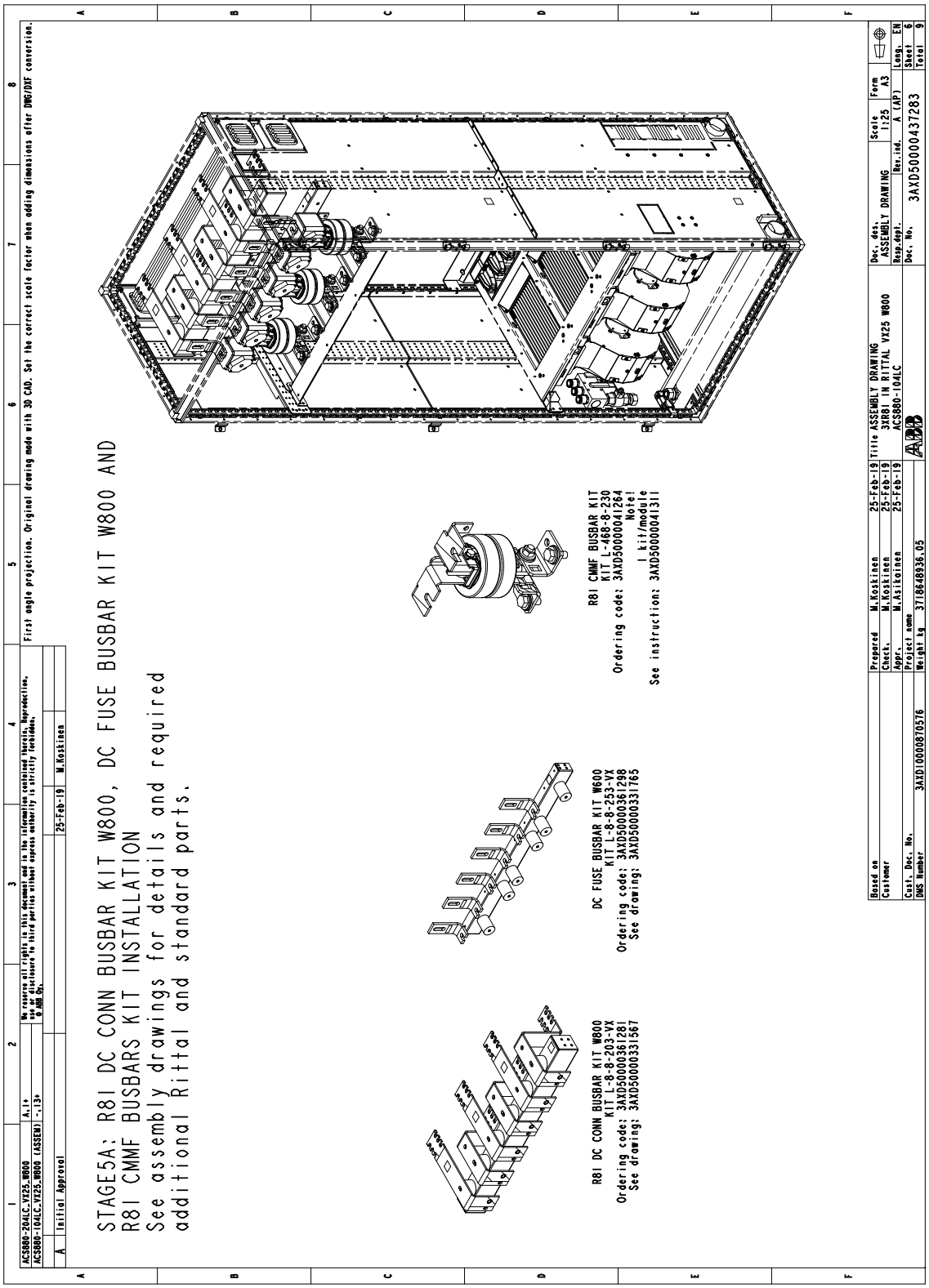

Stage 5B: Installation of DC switch, DC connection and common mode filter busbar kits

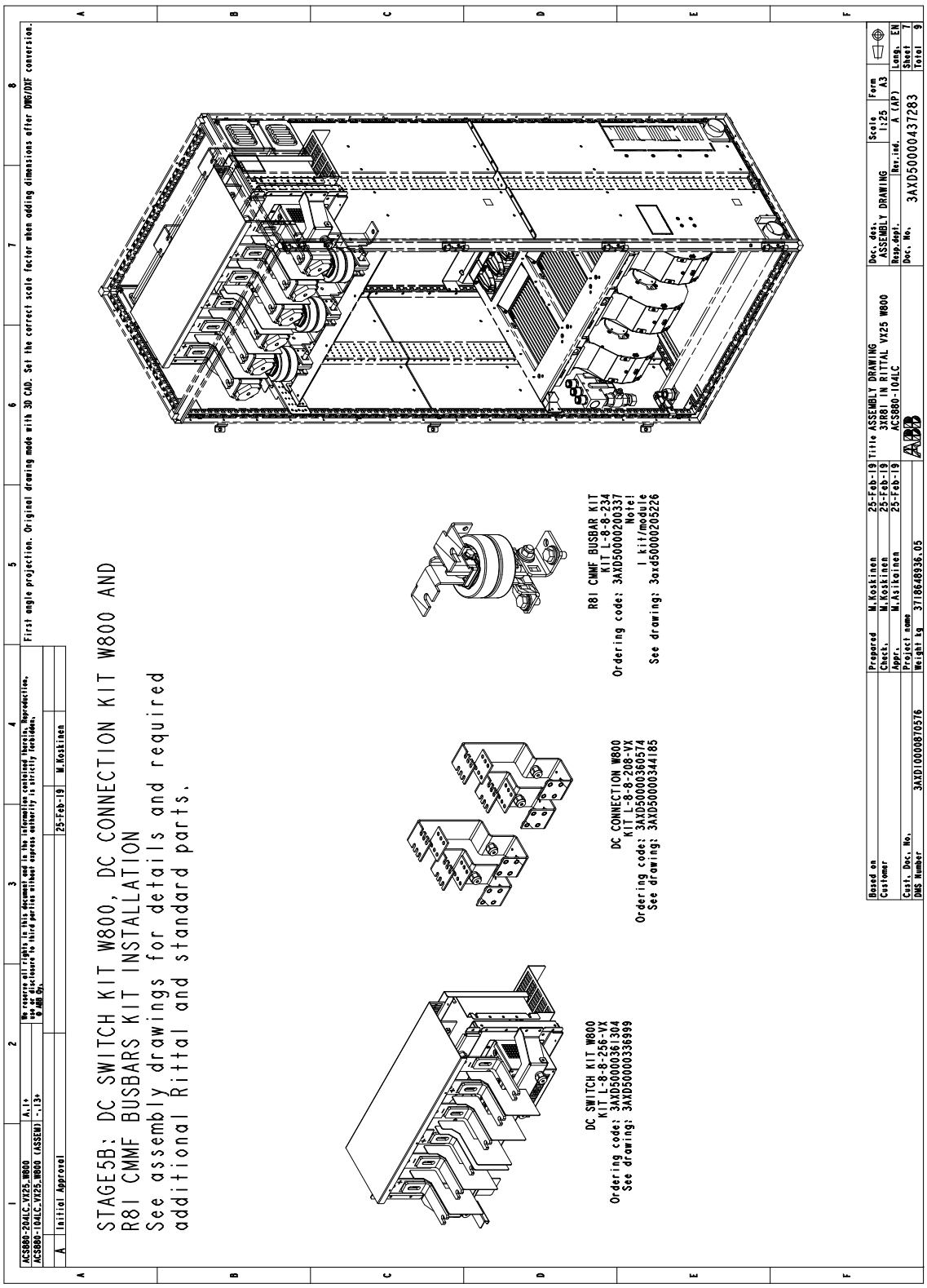

Stage 6: Module installation

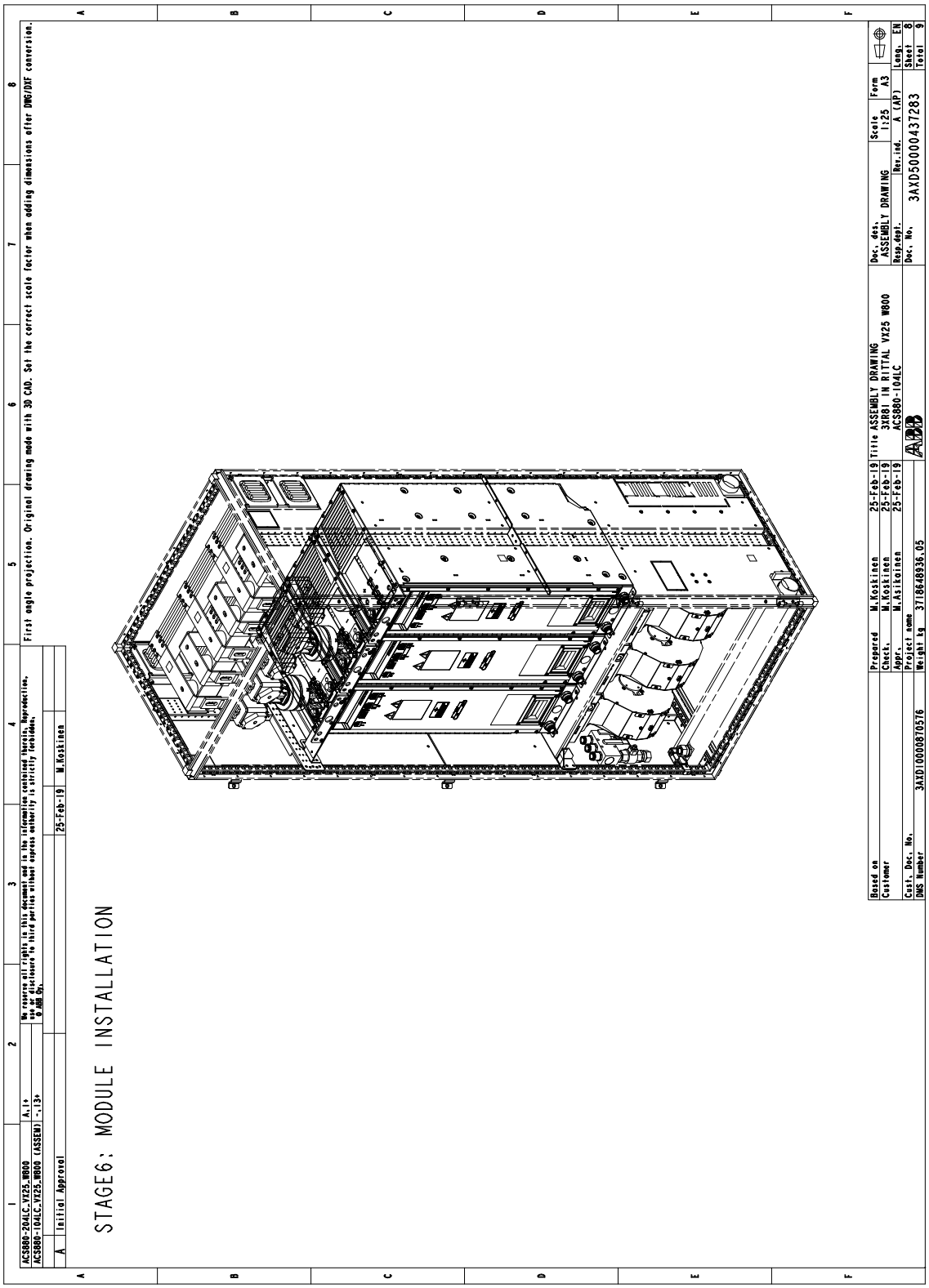

Stage 7: Installation of shrouding

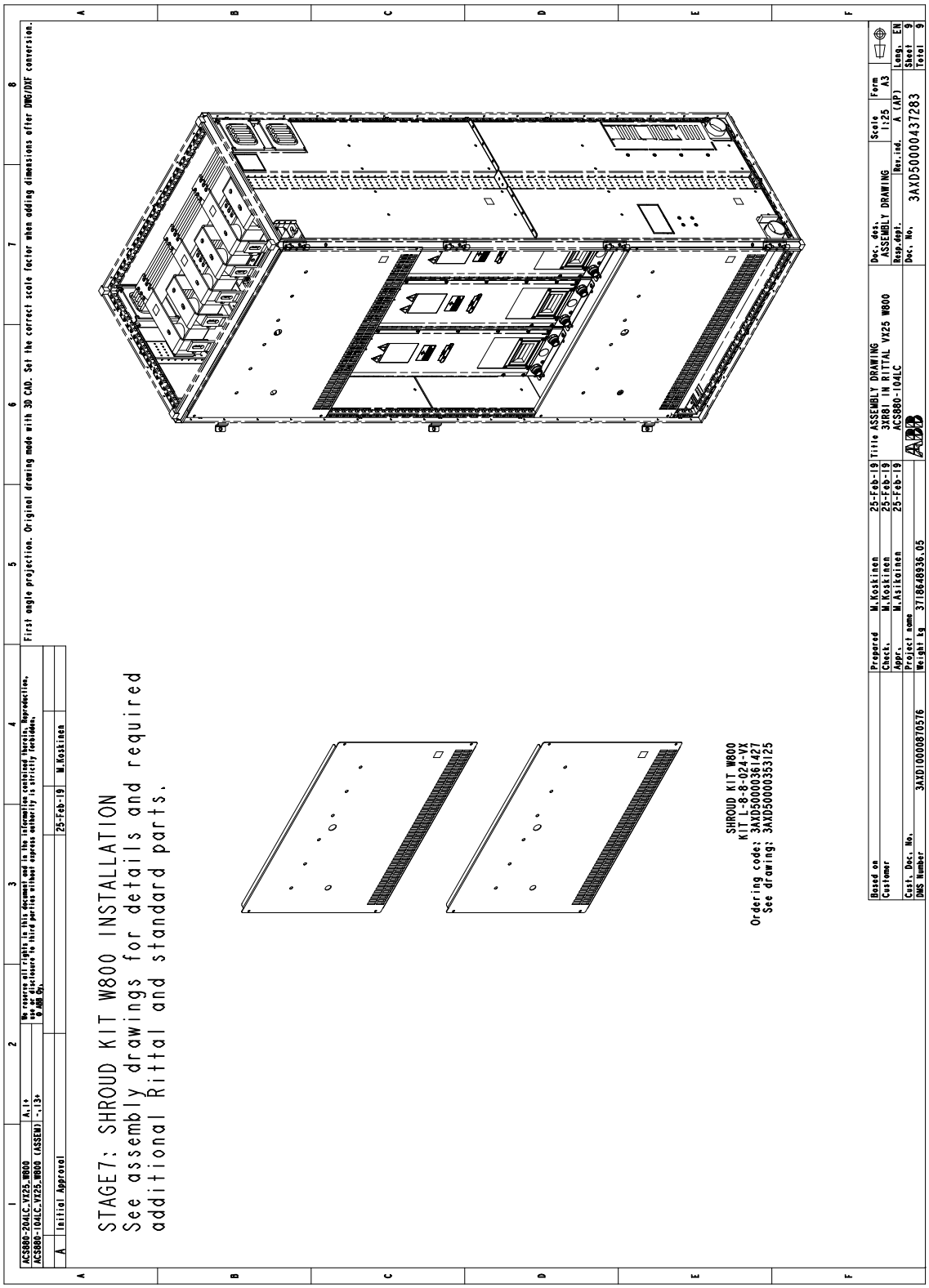

Three R8i modules in a 800 mm wide generic enclosure

Parts to be installed	Instruction code	Kit code	Kit ordering code
Cooling component kit	3AXD50000048283	L-468-8-443	3AXD50000048136
Quick connectors	3AUA0000118667	A-468-8-100	3AUA0000119227
Module mounting mechanics and cooling components	3AXD50000041461	L-8-8-303	3AXD50000041248
	-	-	3AXD50000043886 / 3AXD50000045414
		L-468-8-440	3AXD50000041265
DC busbars (for configuration without DC switch) [1)]	3AXD50000540693	L-7-8-261	3AXD50000540174
	3AXD50000041311	L-468-8-230	3AXD50000041264
DC switch and busbars	3AXD50000336999	L-8-8-256-VX	3AXD50000361304
	3AXD50000205226	L-8-8-234	3AXD50000200337
Supply modules	-	-	-
Shrouding	-	-	-

1) With this configuration, it is possible to install the kits to a 700 mm wide enclosure.

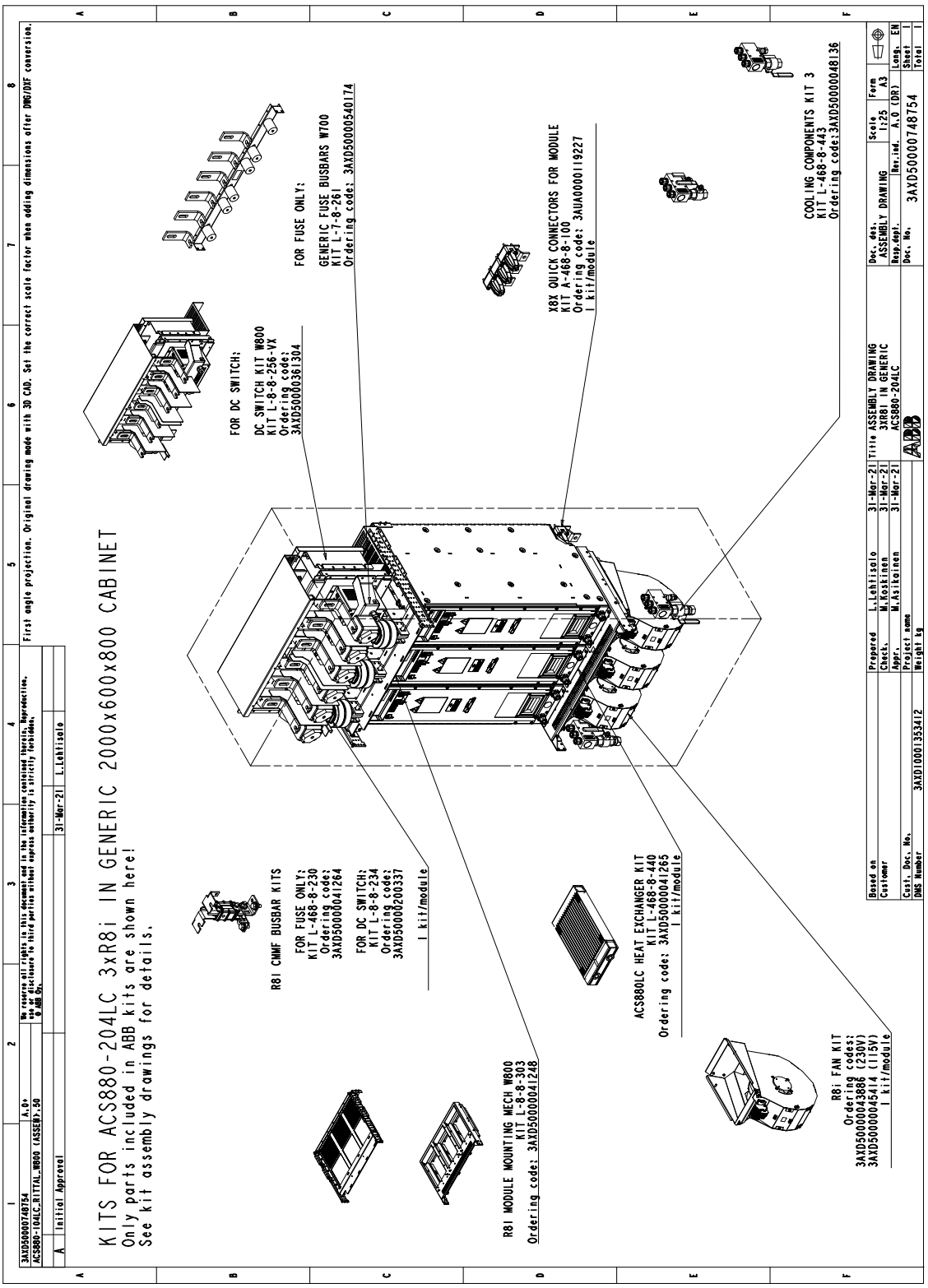
KITS FOR ACS880-204LC 3xR8i IN GENERIC 2000x600x800 CABINET
Only parts included in ABB kits are shown here!
See kit assembly drawings for details.
First angle projection. Original drawing made with 3D CAD. Set the correct scale factor when adding dimensions after DWG/DXF conversion.
FOR DC SWITCH:
DC SWITCH KIT W800
KIT L-8-256-VX
Ordering code:
3AXD50000361304
FOR FUSE ONLY:
GENERIC FUSE BUSBARS W700
KIT L-8-261
Ordering code: 3AXD50000540174
X8X QUICK CONNECTORS FOR MODULE
KIT A-468-8-100
Ordering code: 3AUA0000119227
1 kit/module
COOLING COMPONENTS KIT 3
KIT L-468-8-443
Ordering code:3AXD50000048136
R8i CMMF BUSBAR KITS
FOR FUSE ONLY:
KIT L-468-8-230
Ordering code:
3AXD50000041264
FOR DC SWITCH:
KIT L-8-234
Ordering code:
3AXD50000200337
1 kit/module
R8i MODULE MOUNTING MECH W800
KIT L-8-303
Ordering code: 3AXD50000041248
ACS880LC HEAT EXCHANGER KIT
KIT L-468-8-440
Ordering code: 3AXD50000041265
1 kit/module
R8i FAN KIT
Ordering codes:
3AXD50000043886 (230V)
3AXD50000045414 (115V)
1 kit/module
3AXD50000748754
A.0
Initial Approval
31-Mar-21
L.Lehtisalo
No reserve all rights in this document and in the information contained therein. Reproduction, use or disclosure to third parties without express authority is strictly forbidden. © ABB Oy.
Prepared L.Lehtisalo 31-Mar-21
Check. M.Koskinen 31-Mar-21
Appr. M.Asikainen 31-Mar-21
Project name
Weight kg
Based on
Customer
Cust. Doc. No.
DMS Number 3AXD10001353412
Title ASSEMBLY DRAWING
3NR8I IN GENERIC
ACS880-204LC
Doc. des. ASSEMBLY DRAWING
Resp.dept.
Doc. No. 3AXD50000748754
Scale 1:25
Ins. ind. A.0 (DR)
Form A3
Lang. EN
Sheet 1
Total 1

5

Electrical installation

Contents of this chapter

This chapter describes the electrical installation of the modules.

The wiring diagrams in this chapter are simplified presentations. For details, see the example circuit diagrams included in the manual.

Note: The instructions do not cover all possible cabinet constructions.

For more information on electrical installation, see ACS880 liquid-cooled multidrive cabinets and modules electrical planning (3AXD50000048634 [English]).

Safety and liability

WARNING!
Only qualified electrical professionals are allowed to do the work described in this chapter. Read the **complete safety instructions** before you install, commission, use or service the drive. The complete safety instructions are given in ACS880 liquid-cooled multidrive cabinets and modules safety instructions (3AXD50000048633 [English]).

Note: The installation must always be designed and made according to applicable local laws and regulations. ABB does not assume any liability whatsoever for any installation which breaches the local laws and/or other regulations. Furthermore, if the recommendations given by ABB are not followed, the drive system may experience problems that the warranty does not cover.

Electrical safety precautions

These electrical safety precautions are for all personnel who do work on the drive, motor cable or motor.

This procedure gives information on how to de-energize the drive and make it safe to do work on it. The procedure does not include all possible drive configurations.

WARNING!
Obey these instructions. If you ignore them, injury or death, or damage to the equipment can occur.

If you are not a qualified electrical professional, do not do installation or maintenance work.

Do these steps before you begin any installation or maintenance work.

1. Prepare for the work.
   - Make sure that you have a work order.
   - Do an on-site risk assessment or job hazard analysis.
   - Make sure that you have the correct tools available.
   - Make sure that the workers are qualified.
   - Select the correct personal protective equipment (PPE).
   - Stop the motor(s).
2. Clearly identify the work location and equipment.
3. Disconnect all possible voltage sources. Make sure that re-connection is not possible. Lock out and tag out.
   - If the drive is equipped with a DC/DC converter unit or a DC feeder unit: Open the disconnecting device of the energy storage connected to the unit. The disconnecting device is outside the drive cabinet. Then open the DC switch-disconnector [Q11] of the unit.
   - Open the main disconnecting device of the drive.
   - Open the charging switch if present.
   - Open the disconnector of the supply transformer. (The main disconnecting device in the drive cabinet does not disconnect the voltage from the AC input power busbars of the drive cabinet.)
   - Open the auxiliary voltage switch-disconnector (if present), and all other possible disconnecting devices that isolate the drive from dangerous voltage sources.
   - In the liquid cooling unit (if present), open the switch-disconnector of the cooling pumps.
   - If you have a permanent magnet motor connected to the drive, disconnect the motor from the drive with a safety switch or by other means.
   - Open the main isolating device of the drive.
   - Disconnect all dangerous external voltages from the control circuits.
   - After you disconnect power from the drive, always wait 5 minutes to let the intermediate circuit capacitors discharge before you continue.
4. Protect other energized parts in the work location against contact and take special precautions when close to bare conductors.
5. Measure that the installation is de-energized. Use a quality voltage tester. If the measurement requires removal or disassembly of shrouding or other cabinet

structures, obey the local laws and regulations applicable to live working (including – but not limited to – electric shock and arc protection).

- Before and after you measure the installation, verify the operation of the voltage tester on a known voltage source.
- Make sure that the voltage between the drive input power terminals (L1, L2, L3) and the grounding (PE) busbar is zero.
- Make sure that the voltage between the drive output terminals (T1/U, T2/V, T3/W) and the grounding (PE) busbar is zero.

  Important! Repeat the measurement also with the DC voltage setting of the tester. Measure between each phase and ground. There is a risk of dangerous DC voltage charging due to leakage capacitances of the motor circuit. This voltage can remain charged for a long time after the drive power-off. The measurement discharges the voltage.
- Make sure that the voltage between the drive DC busbars and the grounding (PE) busbar is zero.
- If the drive is equipped with a DC/DC converter unit or a DC feeder unit: Make sure that the voltage between the energy storage terminals of the unit (ES+ and ES-) and the grounding (PE) busbar is zero.

6. Install temporary grounding as required by the local regulations.
7. Ask for a permit to work from the person in control of the electrical installation work.

WARNING! In case of DC bus remaining energized, Personal Protective Equipment (PPE) of Level 2 is required for doing maintenance. Note that this is valid for work on every cabinet of the device.

Isolation from AC supply networks

1. Clearly identify the work location.
2. Disconnect all possible voltage sources.
   - Open the main switch-disconnector [Q1], or rack out the main breaker [Q1] of the drive (whichever is present). Note that some drives have two switch-disconnectors or main breakers [Q1.1 and Q1.2].
   - Open the disconnector of the supply transformer as the main disconnecting device of the drive does not remove the voltage from the input busbars of the drive or from the voltmeter, or BAMU auxiliary measurement unit, auxiliary control voltage switch, charging circuit disconnector [Q4] or others.
   - Make sure that reconnection is not possible. Lock the disconnectors to open position and attach a warning notice to them.
   - Disconnect any external power sources from the control circuits before you do work on the control cables.
   - After you disconnect the drive, always wait for 5 minutes to let the intermediate circuit capacitors discharge before you continue.
3. Protect any other energized parts in the work location against contact.
4. Take special precautions when close to bare conductors.
5. Measure that the installation is de-energized.
   - Use a multimeter with an impedance of at least 1 Mohm.
   - Make sure that the voltage between the drive input power terminals and the grounding (PE) busbar is close to 0 V.
6. Install temporary grounding as required by the local regulations. Close the grounding switch (if present), or connect the AC and DC busbars to PE with a temporary grounding tool.
7. Ask for a permit to work from the person in control of the electrical installation work.

Isolation from common DC bus

In case of units with DC voltage remaining: if there are several power sources for the DC bus, the supply unit which shall be isolated must be equipped with a DC switch-disconnector. In order to isolate the supply unit from the live DC bus, open the DC switch-disconnector [Q11] and also the charging switch [Q10] in EVERY cubicle containing supply modules. In addition, open the DC switch-disconnector of the AC circuit [Q40].

1. Clearly identify the work location.
2. Disconnect all possible voltage sources. Note that energy to the DC bus can also be fed back by motors, energy storages, etc.
   - Make sure that reconnection is not possible. Lock the disconnectors to open position and attach a warning notice to them.
   - Disconnect any external power sources from the control circuits before you do work on the control cables.
   - After you disconnect the drive, always wait for 5 minutes to let the intermediate circuit capacitors discharge before you continue.
3. Protect any other energized parts in the work location against contact.
4. Take special precautions when close to bare conductors.
5. Measure that the installation is de-energized.
   - Use a multimeter with an impedance of at least 1 Mohm.
   - Make sure that the voltage between the drive input power terminals and the grounding (PE) busbar is close to 0 V.
6. Install temporary grounding as required by the local regulations. Connect the DC busbars to PE with a temporary grounding tool.
7. Ask for a permit to work from the person in control of the electrical installation work.

General notes

Printed circuit boards

WARNING!
Use a grounding wristband when you handle printed circuit boards. Do not touch the boards unnecessarily. The boards contain components sensitive to electrostatic discharge.

Handling fiber optic cables

WARNING!
Obey these instructions. If you ignore them, damage to the equipment can occur.

- Handle the fiber optic cables with care.
- When you disconnect the fiber optic cables, always hold the connector, not the cable.
- Do not touch the ends of the fibers. They are sensitive to dirt.
- Do not bend the fiber optic cables too tightly. The minimum allowed bend radius is 35 mm (1.4 in).

Checking the insulation of the assembly

WARNING!
Do not do voltage withstand or insulation resistance tests on the drive. The tests can cause damage to the drive. Every drive is tested for insulation between the main circuit and the chassis at the factory. Also, there are voltage-limiting circuits inside the drive which cut down the testing voltage automatically.

Measuring the insulation resistance of the input power cable

Before you connect the input power cable to the drive, measure its insulation resistance according to local regulations.

Connecting the input power cables/busbars

Connection diagram (frame R7i)

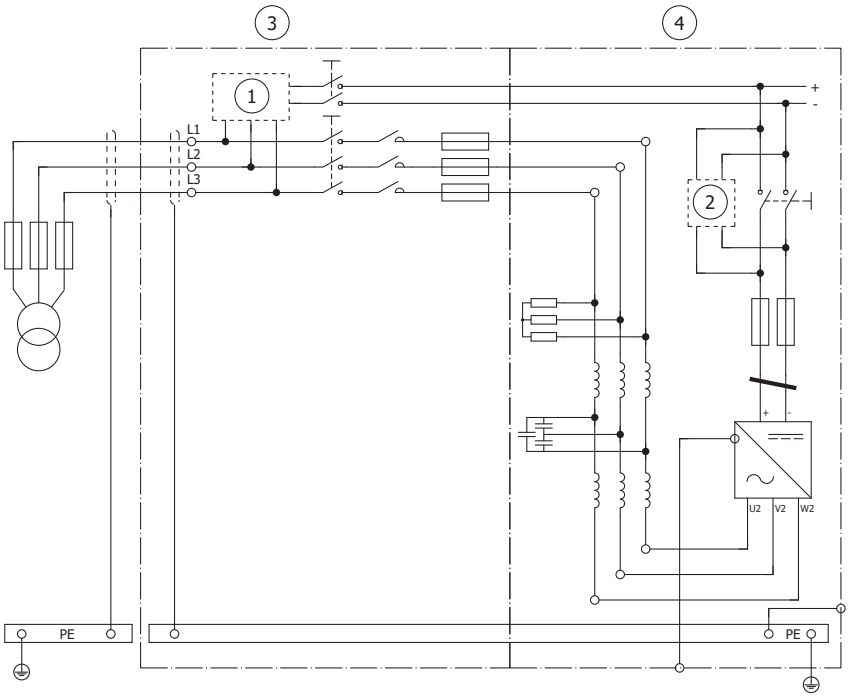

1	Components for the drive main charging circuit. For details, see the delivery-specific circuit diagrams.
2	Components for the supply module (DC) charging circuit. For details, see the delivery-specific circuit diagrams.
3	Incoming cubicle
4	IGBT supply module cubicle

Note: For the conductivity requirements for the shield and the PE conductor, and the cable selection instructions, see ACS880 liquid-cooled multidrives cabinets and modules electrical planning (3AXD50000048634 [English]).

Connection diagram (frame R8i and multiples)

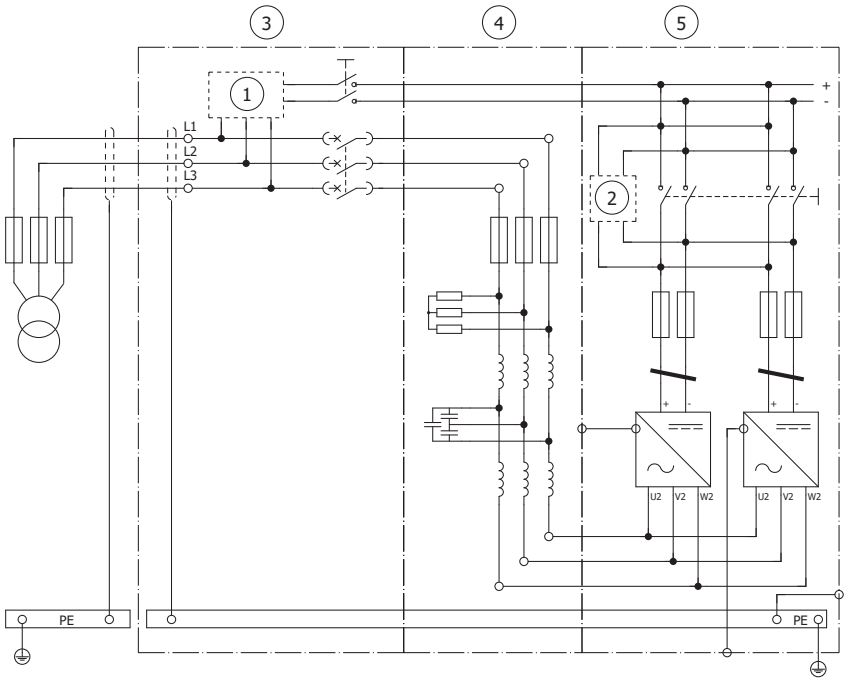

1	Components for main charging circuit. For details, see chapter Example circuit diagrams.
2	Components for DC charging circuit. For details, see chapter Example circuit diagrams.
3	Incoming cubicle
4	LCL filter cubicle
5	IGBT supply module cubicle

Notes:

For the conductivity requirements for the shield and the PE conductor, see ACS880 liquid-cooled multidrive cabinets and modules electrical planning (3AXD50000048634 [English]).

For the cable selection instructions, see ACS880 liquid-cooled multidrive cabinets and modules electrical planning (3AXD50000048634 [English]).

For the tightening torques, see Drive modules cabinet design and construction instructions (3AUA0000107668 [English]).

Connection procedure for power connections inside the IGBT supply module cubicle

For the cable types, see ACS880 liquid-cooled multidrive cabinets and modules electrical planning (3AXD50000048634 [English]).

WARNING!
Obey the safety instructions given in ACS880 liquid-cooled multidrives cabinets and modules safety instructions (3AXD50000048633 [English]). If you ignore the safety instructions, injury or death, or damage to the equipment can occur.

If you are not a qualified electrical professional, do not do installation or maintenance work.

WARNING!
Apply grease to stripped aluminum conductors before you attach them to non-coated aluminum cable lugs. Obey the grease manufacturer's instructions. Aluminum-aluminum contact can cause oxidation in the contact surfaces.

1. Stop the drive and do the steps in section Electrical safety precautions (page 142) before you start the work.
2. Open the door of the IGBT supply module cubicle and remove the shrouding (if any).
3. Make the connections in between the main circuit components inside the cabinet if not done yet. Do the connections according to the circuit diagrams delivered with the drive. If the connections are ready, check them against the final circuit diagrams. Do not use the example circuit diagrams in this manual as the sole source of information when doing or checking the connections.
   For the tightening torques, see the technical data.
4. Ground the modules by the top edge of the front plate. The grounding point is marked on the module. Connect the front plate to the frame support bracket with screws. The frame support bracket should have a galvanic connection to the PE busbar through the cabinet frame.

   Note: If the cabinet frame is painted (for example, Rittal VX25 enclosures), it is important to make sure that a good galvanic connection to ground (PE busbar) is achieved. You can, for example, remove the paint from the connection points and use star washers.

   Note: The connection to ground merely through the mounting screws and the cabinet chassis is not always good enough. To ensure the continuity of the protective bonding circuit, you can connect the modules to the cabinet PE busbar with a copper busbar or cable. The inductance and impedance of the PE conductor must be rated according to permissible touch voltage appearing under fault conditions (so that the fault point voltage will not rise excessively when a ground fault occurs). See ACS880 liquid-cooled multidrive cabinets and modules electrical planning (3AXD50000048634 [English]).
5. Refit any shrouding removed earlier and close the cubicle door.

Connection procedure

WARNING!
Obey the safety instructions given in ACS880 liquid-cooled multidrives cabinets and modules safety instructions (3AXD50000048633 [English]). If you ignore the safety instructions, injury or death, or damage to the equipment can occur.

If you are not a qualified electrical professional, do not do installation or maintenance work.

WARNING!
Apply grease to stripped aluminum conductors before you attach them to non-coated aluminum cable lugs. Obey the grease manufacturer's instructions. Aluminum-aluminum contact can cause oxidation in the contact surfaces.

The input power cables are connected outside the IGBT supply module cubicle, typically inside the incoming cubicle (ICU).

1. Stop the drive and do the steps in section Electrical safety precautions (page 142) before you start the work.
2. Open the door of the incoming cubicle and remove the shrouding.
3. Make sure that you have the following components installed in the incoming cubicle:
   - input power cable busbars
   - main breaker Q1/main switch-disconnector
   - charging circuit.
4. Make the interconnections (if not made yet) between:
   a. input power cable busbars
   b. main breaker Q1/main switch-disconnector
   c. AC busbars of the LCL cabinet / LCL filter.
5. Lead the input power cables into the cabinet. 360° grounding of the cable shield at the entry is recommended to suppress interference.
6. Twist the input power cable shields to bundles and connect to cabinet PE (ground) busbar. Connect the separate ground conductors/cables to cabinet PE (ground) busbar.
7. Connect the phase conductors to the input power cable busbars. See the tightening torques in technical data.
8. Lead the charging circuit supply cable into the cabinet. 360° grounding of the cable shield at the entry is recommended to suppress interference (not shown in the figure).
9. Twist the cable shield of the charging circuit cable to a bundle and connect to the cabinet PE (ground) busbar (not shown in the figure). Connect the separate ground conductors/cables to cabinet PE (ground) busbar.
10. Connect the phase conductors of the charging circuit supply cable to the charging circuit. The connections of the ABB-defined charging circuit with the terminal markings are shown in example circuit diagrams. See the tightening torques in technical data.

11. Inside the IGBT supply module cubicle, push the IGBT supply module into the quick connectors.
12. Ground the module (if not made yet). If the grounding via the module fixing screws is not good enough, connect a separate cable between the module grounding point and the cabinet PE busbar. The grounding point is marked on the module.

    Note: If the cabinet frame is painted (such as with Rittal VX25 enclosures), it is important to make sure that a good galvanic connection to ground (PE busbar) is achieved. You can, for example, remove the paint from the connection points and use star washers.

    Note: The connection to ground through fixing screws and the cabinet chassis is not always good enough. To ensure the continuity of the protective bonding circuit, you can connect the modules to the cabinet PE busbar with a copper busbar or cable. The inductance and impedance of the PE conductor must be rated according to permissible touch voltage appearing under fault conditions (so that the fault point voltage will not rise excessively when a ground fault occurs).

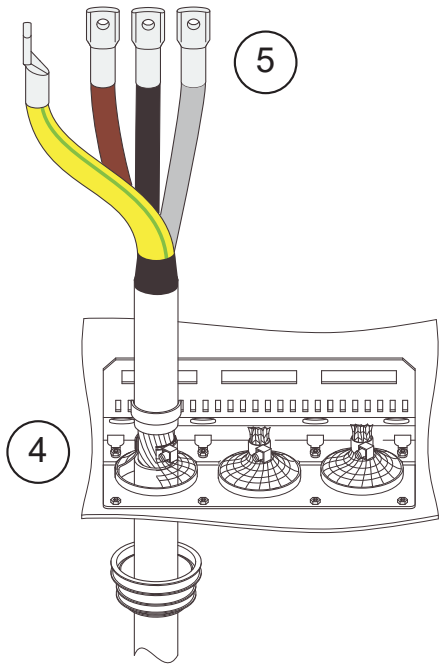

Note that this figure is an example of a cable entry that the cabinet installer has to acquire and install in the cabinet.

Connecting the LCL filter

By default, the LCL filter is protected against overheating (caused by a faulty fan, for example) with a thermistor, that is located in the choke of the LCL filter. If the filter temperature becomes too high, the IGBT supply module is automatically stopped. Temperature monitoring of the chokes and other temperature protections must always be connected to digital input XDI:1 on the control unit.

WARNING!
If the overheating protection is removed with parameter settings, the filter may be damaged permanently or cause a fire.

WARNING!
Use the LCL filter only with an ACS880-204LC IGBT supply module. Use the filter only with an IGBT supply module of an appropriate frame size.

Cabling the LCL filter

Cable every capacitor to every phase busbar. Do not wire capacitors to each other. See the cabling examples below.

Cabling example for BLCL-14LC-5

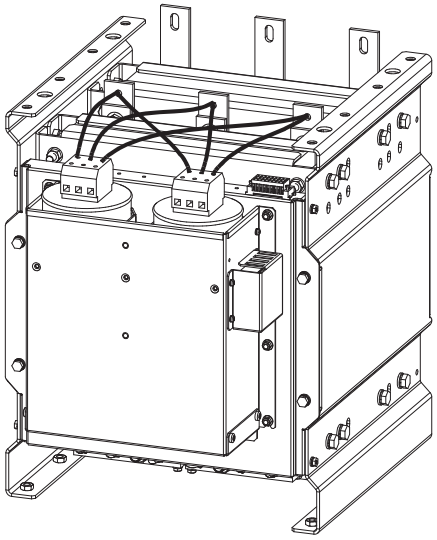

Cabling example for BLCL-15LC-7

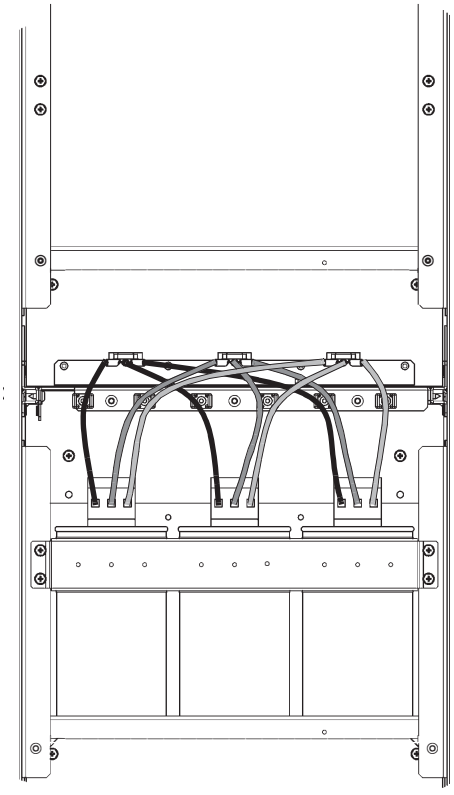

Cabling example for BLCL-24LC-7
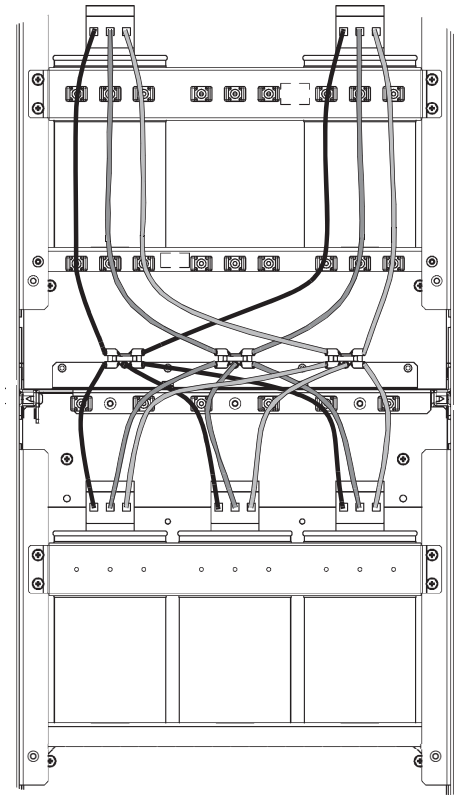
Example of not allowed cabling
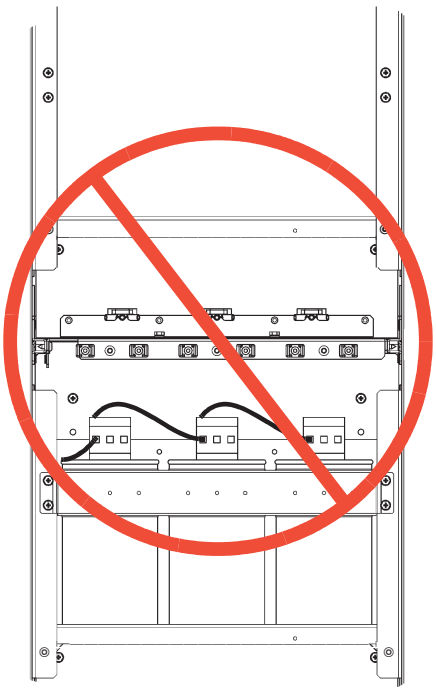

Cabling specification (frame R7i)

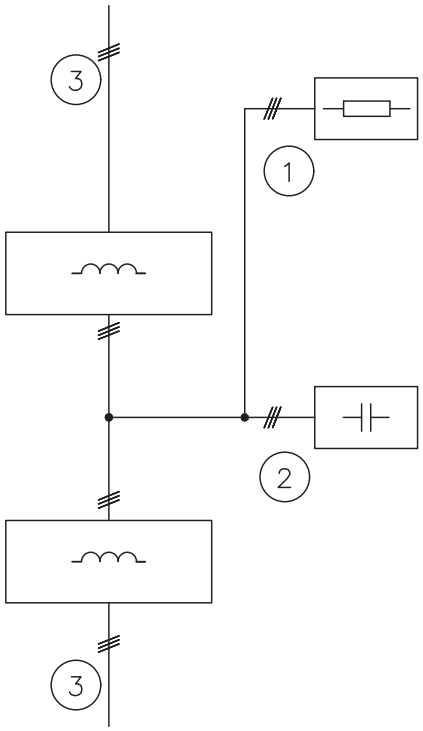

1	Resistor cabling: copper 2.5 mm² / 14 AWG Reinforced insulation 3 pcs of cables per resistor Cable lug bolt size: M5 (resistor)
2	Capacitor cabling: copper 16 mm² / 6 AWG Reinforced insulation 3 pcs of cables per capacitor Cable lug bolt size: M8 (LCL choke busbars)
3	Grid-side and converter-side busbars: ABB accessories kits

Cabling specification (frame R8i)

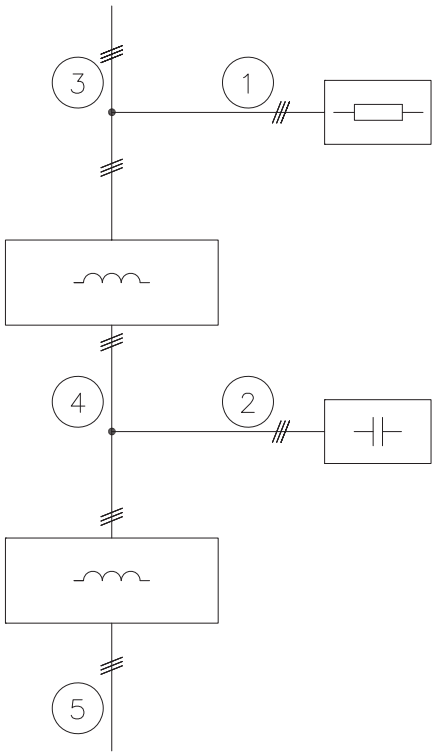

1	Resistor cabling: copper 2.5 mm² / 14 AWG Reinforced insulation 3 pcs of cables per resistor Cable lug bolt size: M5 (resistor), M6 or M5 (LCL choke busbars (see page 272) or LCL fuse busbars (see page 271))
2	Capacitor cabling: copper 16 mm² / 6 AWG Reinforced insulation 3 pcs of cables per capacitor Cable lug bolt size: M6 (LCL choke busbars (see page 272))
3	Grid-side busbars: ABB accessories kits
4	Busbars between chokes: ABB accessories kits
5	Converter-side busbars: ABB accessories kits

Main breaker / contactor

A main breaker or contactor is needed for the following reasons:

- If the LCL filter is connected to the AC input power supply while the IGBT supply module is not modulating/active, there is a risk that the filter responds to disturbance frequencies in a distorted AC input and starts resonating, which may cause permanent damage to the IGBT supply module, LCL filter and equipment connected to the DC bus. If the IGBT supply module is stopped, faulty or otherwise inactive, it cannot counteract the resonance of the filter.
- The IGBT supply module and the LCL filter cannot prevent power flow from the AC input to the DC bus and further to the ACS880-104LC inverter module(s). Even if the modulation of the IGBT supply module is stopped, the anti-parallel diodes in it enable power flow to the DC bus and to the inverter(s). In other words, merely stopping the IGBT supply module does not stop the system.
- The IGBT supply module is not protected against excessive current drawn from the DC bus. If the motoring power (power demanded from the DC bus) exceeds the supplying capability of the IGBT supply module, it trips. If the current demand remains or increases, the IGBT supply module is damaged.

See also ACS880 liquid-cooled multidrive cabinets and modules electrical planning (3AXD50000048634 [English]).

Installing the charging circuit

The cabinet builder must install and connect the charging circuit. For connections, see chapter Example circuit diagrams. Consult ABB for more information on the components and wirings needed. Note that ACS880-204LC contains two separate charging circuits: AC-DC charging circuit (line-up charging) and DC-DC charging circuit.

Activate and tune the charging function in the control program. For information on tuning the parameters, see the firmware manual of the supply unit.

Connecting the external power supply cable for the auxiliary circuit

Connectors are described in chapter Operation principle and hardware description.

Connecting the control cables

Connection diagram

See the example circuit diagrams, and the default I/O diagram.

Connection procedure

Note: The instructions below are based on an example cabinet construction. They are not applicable to all possible solutions but only clarify the principles.

The following procedure instructs how to connect the control cables of a supply unit. In the example, the power cables are routed to the cabinet through the bottom. Note that the figures in the procedure are examples.

For technical data and default I/O connections of the control unit, see The control unit (page 163).

WARNING!
Obey the safety instructions given in ACS880 liquid-cooled multidrives cabinets and modules safety instructions (3AXD50000048633 [English]). If you ignore the safety instructions, injury or death, or damage to the equipment can occur.

If you are not a qualified electrical professional, do not do installation or maintenance work.

1. Remove shrouding to access the cable entries and trunking inside the cubicle.
2. Run the control cables into the cubicle. If possible, arrange for a 360° grounding of the cable shield at the cable entry.
   If the outer surface of the shield is non-conductive, turn the shield inside out as shown below and wrap copper foil around the cable to keep the shielding continuous. Do not cut the grounding wire (if present).

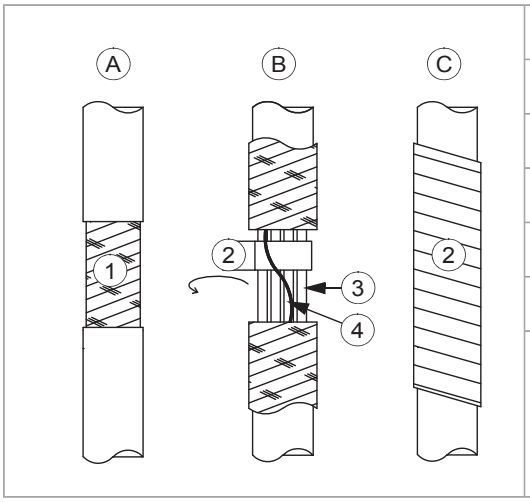

A	Stripped cable
B	Conductive surface of the shield exposed
C	Stripped part covered with copper foil
1	Cable shield
2	Copper foil
3	Shielded twisted pair
4	Grounding wire

3. Run the cables to the control unit (or other connection point). Use the existing trunking wherever possible.
4. Cut the cables to suitable length.

5. Strip the cable ends and conductors. When connecting to the drive I/O, also remove the shield along with the outer sheathing, and use electrical tape or shrink tubing to contain the strands. Elsewhere, twist the outer shield strands into a bundle, crimp a lug onto it and connect it to the nearest chassis grounding point.

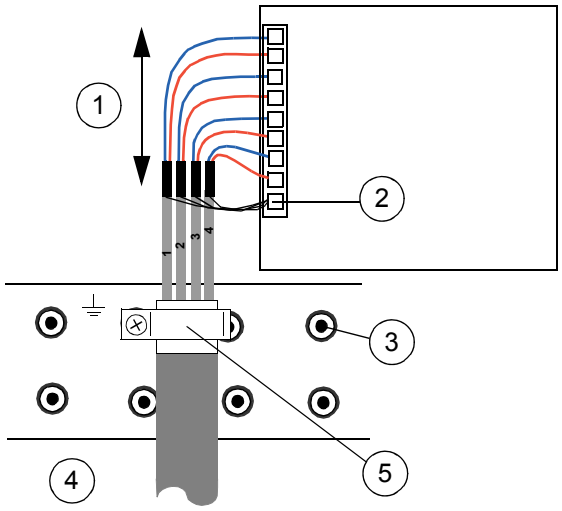

1	Keep as short as possible
2	SHIELD*
3	If no dedicated “shield” connector is provided, ground the inner cable shields to the chassis.
4	At the other end of the cable, leave the shield unconnected, or connect it to ground via a capacitor with a value of a few nanofarads.
5	Where grounding clamps are not available, twist the shield strands into a bundle, crimp a lug terminal onto it and fasten the lug to the chassis. Secure the cable into place with eg. cable ties.

6. Connect the conductors to appropriate terminals.
7. Refit any shrouds removed earlier.

Connectors X50…X59 and fiber optic connectors

Connectors X50…X59 and fiber optic connectors are described in chapter Operation principle and hardware description.

Connecting a PC

WARNING!
Do not connect the PC directly to the control panel connector of the control unit. It can cause damage.

A PC (with, for example, the Drive Composer PC tool) can be connected as follows:

1. To connect a control panel to the unit, either
   - insert the control panel into the panel holder or platform, or
   - use an Ethernet (eg, Cat 5e) networking cable.
2. Remove the USB connector cover on the front of the control panel.
3. Connect an USB cable (Type A to Type Mini-B) between the USB connector on the control panel (3a) and a free USB port on the PC (3b).
4. The panel will display an indication whenever the connection is active.
5. See the documentation of the PC tool for setup instructions.

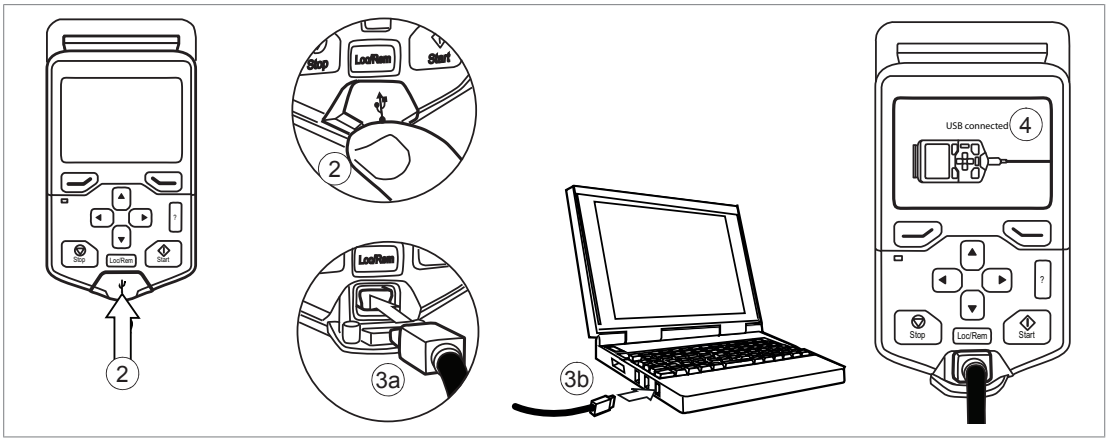

Installing option modules

WARNING!
Obey the safety instructions of the drive. If you ignore them, injury or death, or damage to the equipment can occur.

Pay attention to the free space required by the cabling or terminals coming to the option modules.

1. Do the steps in section Electrical safety precautions (page 142) before you start the work.
2. Pull out the lock (a) with a screw driver.

   Note: The location of the lock depends on the module type.
3. Install the module to a free option module slot on the control unit.
4. Push in the lock (a).
5. Tighten the grounding screw (b) to a torque of 0.8 N·m (7 lbf·in).

   Note: The screw tightens the connections and grounds the module. It is essential for fulfilling the EMC requirements and for proper operation of the module.

WARNING!
Do not use excessive force, or leave the screw too loose. Over-tightening can cause damage to the screw or module. A loose screw can cause an operation failure.

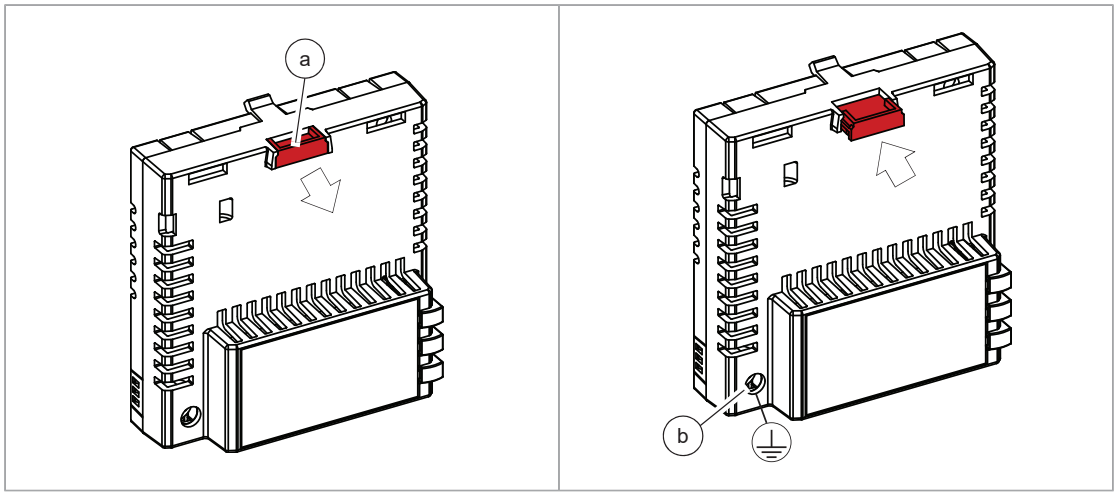

6. Connect the wiring to the module. Obey the instructions given in the documentation of the module.

If you need to remove the option module after it has been installed into the drive, use a suitable tool (e.g. small pliers) to carefully pull out the lock.

Installing and using CIO-01 I/O module

See CIO-01 I/O module and distributed I/O bus user's manual (3AXD50000126880 [English]).

6

The control unit

Contents of this chapter

This chapter

- describes the connections of the control unit
- contains the specifications of the inputs and outputs of the control unit.

General

The BCU-x2 or UCU-22…24 control unit is used with frame sizes R7i and R8i and multiples. The BCU-x2 consists of a BCON-12 control board (and a BIOC-01 I/O connector board and power supply board) built in a metal housing. The control unit is connected to the IGBT supply module(s) by fiber optic cables.

In this manual,

- the name “BCU-x2” represents the control unit types BCU-02, BCU-12 and BCU-22. These have a different number of power module connections (2, 7 and 12 respectively) but are otherwise similar.
- the name "UCU-22…24” represents the control unit types UCU-22 and UCU-23. These have a different number of power module connections (2 and 8 respectively) but are otherwise similar.

BCU layout

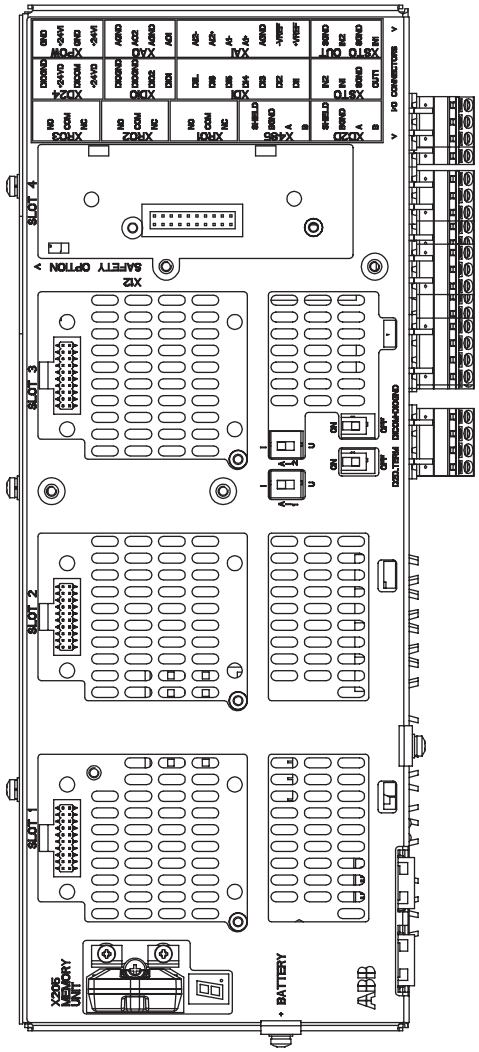

	Description
I/O	I/O terminals (see following diagram)
SLOT 1	I/O extension, encoder interface or fieldbus adapter module connection. (This is the sole location for an FDPI-02 diagnostics and panel interface.)
SLOT 2	I/O extension, encoder interface or fieldbus adapter module connection
SLOT 3	I/O extension, encoder interface, field-bus adapter or FSO safety functions module connection
SLOT 4	RDCO-0x DDCS communication option module connection
X205	Memory unit connection
BATTERY	Holder for real-time clock battery (BR2032)
AI1	Mode selector for analog input AI1 (I = current, U = voltage)
AI2	Mode selector for analog input AI2 (I = current, U = voltage)
D2D TERM	Termination switch for drive-to-drive link (D2D)
DICOM= DIOGND	Ground selection. Determines whether DICOM is separated from DIOGND (ie. the common reference for the digital in-puts floats). See the ground isolation diagram.
7-segment display Multicharacter indications are displayed as repeated sequences of characters	
	(“U” is indicated briefly before “o”.) Control program running
	Control program startup in progress
	(Flashing) Firmware cannot be started. Memory unit missing or corrupted
	Firmware download from PC to control unit in progress
	At power-up, the display may show short indications of eg. “1”, “2”, “b” or “U”. These are normal indications immedi-ately after power-up. If the display ends up showing any other value than those described, it indicates a hardware failure.

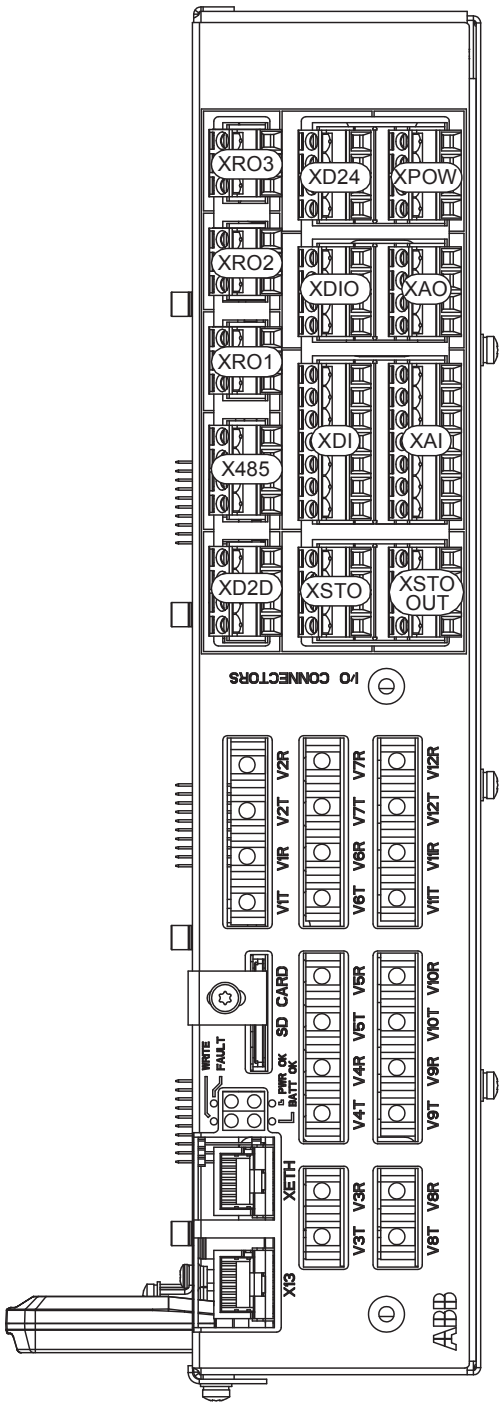

	Description
XAI	Analog inputs
XAO	Analog outputs
XDI	Digital inputs, Digital input interlock (DIIL)
XDIO	Digital input/outputs
XD2D	Drive-to-drive link
XD24	+24 V output (for digital inputs)
XETH	Ethernet port – Not in use
XPOW	External power input
XRO1	Relay output RO1
XRO2	Relay output RO2
XRO3	Relay output RO3
XSTO	Safe torque off connection (input signals)
XSTO OUT	Safe torque off connection (to inverter modules)
X12	(On the opposite side) Connection for FSO safety functions module (optional)
X13	Control panel / PC connection
X485	Not in use
V1T/V1R, V2T/V2R	Fiber optic connection to modules 1 and 2 (VxT = transmitter, VxR = receiver)
V3T/V3R … V7T/V7R	Fiber optic connection to modules 3…7 (BCU-12/22 only) (VxT = transmitter, VxR = receiver)
V8T/V8R … V12T/V12R	Fiber optic connection to modules 8…12 (BCU-22 only) (VxT = transmitter, VxR = receiver)
SD CARD	Data logger memory card for inverter module communication
BATT OK	Real-time clock battery voltage is higher than 2.8 V. If the LED is off when the control unit is powered, replace the battery.
FAULT	The control program has generated a fault. See the firmware manual of the supply/inverter unit.
PWR OK	Internal voltage supply is OK
WRITE	Writing to memory card in progress. Do not remove the memory card.

UCU-22...24 layout

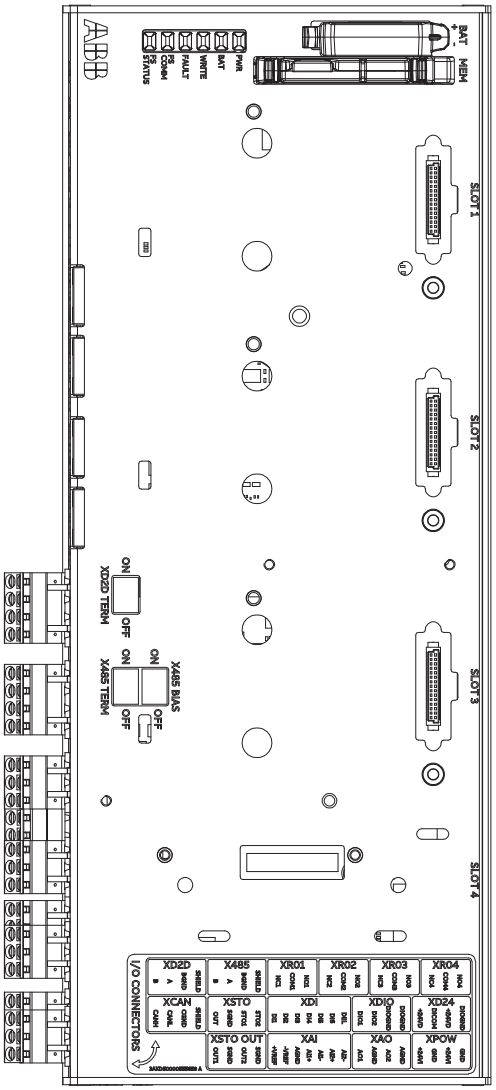

	Description
I/O	I/O terminals
SLOT 1	I/O extension, encoder interface or fieldbus adapter module connection. For F-type modules with USCA-02 adapter.
SLOT 2	I/O extension, encoder interface or fieldbus adapter module connection. For F-type modules with USCA-02 adapter.
SLOT 3	I/O extension, encoder interface or fieldbus adapter module connection. For F-type modules with USCA-02 adapter.
SLOT 4	RDCO-0x DDCS communication option module connection
MEM	UMU-01 memory unit connection. Data logger microSDHC memory card for inverter module communication is inside the memory unit.
BAT	Holder for real-time clock battery (BR2032)
XD2D TERM	Termination switches for drive-to-drive link (XD2D)
X485 TERM	RS-485 link termination switch
X485 BIAS	RS-485 link bias switch.
DICOM= DIOGND	Ground selection. Determines whether DICOM is separated from DIOGND (ie. the common reference for the digital inputs floats). Refer to the ground isolation diagram.

LED	Description
PWR	When the PWR LED is on, the voltage supply is sufficient.
BAT	When the BAT LED is on, the real-time clock battery voltage is higher than 2.5 V. If the LED is off, replace the battery.
WRITE	When the WRITE LED is on, writing to microSDHC memory card is in progress. Do not remove the microSDHC memory card.
FAULT	The control program has generated a fault. Refer to the firmware manual.
FS COMM	Reserved.
FS STATUS	Reserved.

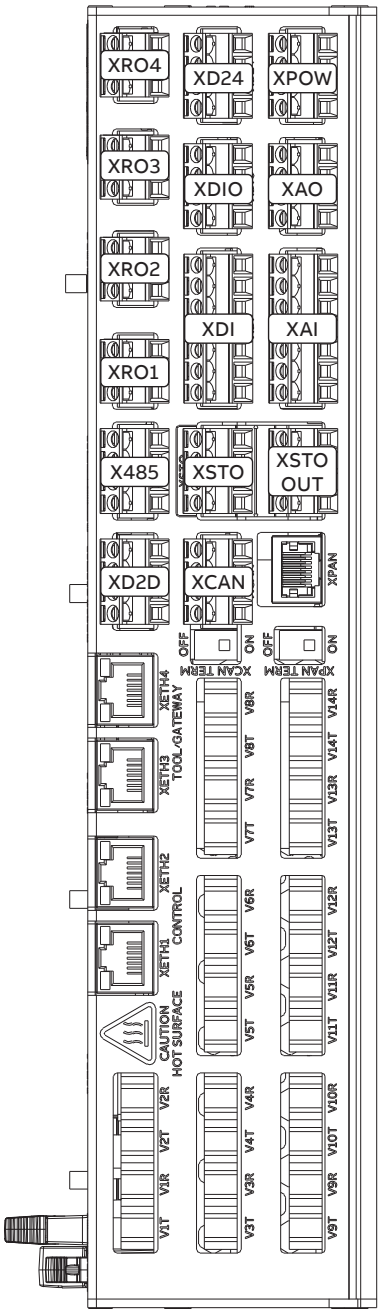

	Description
XAI	Analog input
XAO	Analog output
XCAN	Not in use
XCAN TERM	CAN bus termination switch
XDI	Digital input
XDIO	Digital input/output
XD2D	Drive-to-drive link
XD24	+24 V output (for digital input)
XETH1	Ethernet ports for fieldbus, internal switch
XETH2	
XETH3	Ethernet ports for tool communication, internal switch
XETH4	
XPAN	Control panel connection
XPAN TERM	Panel bus termination switch
XPOW	External power input
XRO1	Relay output RO1
XRO2	Relay output RO2
XRO3	Relay output RO3
XRO4	Relay output RO4, reserved.
XSTO	Safe torque off connection (input signals)
XSTO OUT	Safe torque off connection (to inverter modules)
X485	RS-485 link
V1T/V1R … V14T/V14R	Fiber optic connections to converter modules (VxT = transmitter, VxR = receiver)

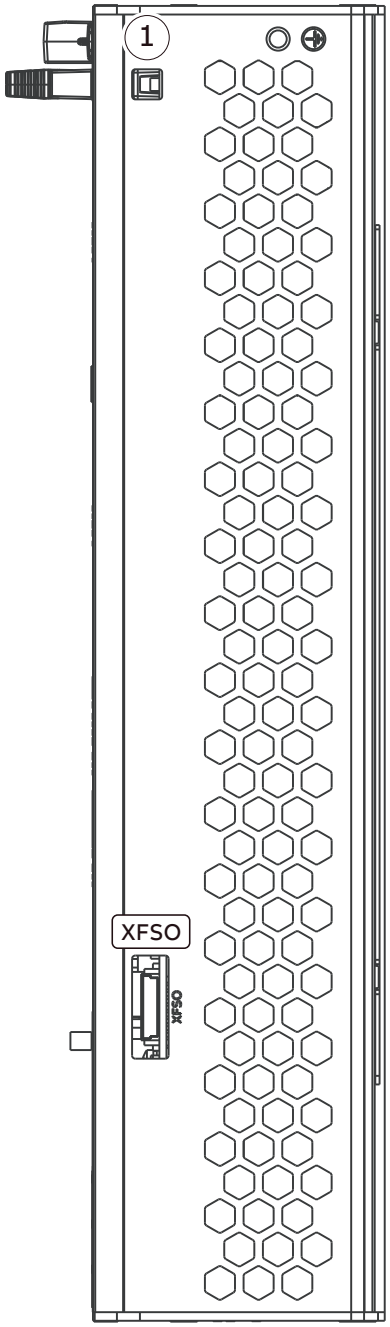

	Description
XFSO	Not in use
Environmental sensors (1)	Humidity and temperature measurements

Default I/O diagram of the supply control unit (BCU)

The diagram below shows the default I/O connections on the supply control unit (A51), and describes the use of the connections in the supply unit.

The wire size accepted by all screw terminals (for both stranded and solid wire) is 0.5 … 2.5 mm² (22 … 12 AWG). The tightening torque is 0.45 N·m (4 lbf·in).

Terminal			Description	
XD2D			Drive-to-drive link	
1 2 3 4	1	B	Not in use by default	
	2	A		
	3	BGND		
	4	Shield		
ON OFF	D2D.TERM		Drive-to-drive link termination switch [1]	
X485			RS485 connection	
5 6 7 8	5	B	Cooling fan monitoring (CIO module)	
	6	A		
	7	BGND		
	8	Shield		
XRO1, XRO2, XRO3			Relay outputs	
11 12 13 21 22 23 31 32 33	11	NC	Norm. closed	XRO1: **Charging** [2] (Energized = Closes charging contactor.) 250 V AC / 30 V DC, 2 A
	12	COM	Common	
	13	NO	Norm. open	
	21	NC	Norm. closed	XRO2: **Fault (-1)** [3] (Energized = Indicates no fault.) 250 V AC / 30 V DC, 2 A
	22	COM	Common	
	23	NO	Norm. open	
	31	NC	Norm. closed	XRO3: **MCB ctrl** [2] (Energized = Closes main contactor/breaker.) 250 V AC / 30 V DC, 2 A
	32	COM	Common	
	33	NO	Norm. open	
XSTO, XSTO OUT			Safe torque off [4]	
1 2 3 4 5 6 7 8	1	OUT	XSTO: Factory connection. Both circuits (power module, control unit) must be closed for the supply unit to start (IN1 and IN2 must be connected to OUT).	
	2	SGND		
	3	IN1		
	4	IN2		
	5	IN1	XSTO OUT: Not in use.	
	6	SGND		
	7	IN2		
	8	SGND		
XDI			Digital inputs	

Terminal			Description
1 2 3 4 5 6 7	1	DI1	**Temp fault**[3] (0 = overtemperature)
	2	DI2	**Run / enable**[3] (1 = run / enable)
	3	DI3	**MCB feedback**[2] (0 = main contactor/breaker open)
	4	DI4	Not in use by default. Can be used for eg, auxiliary circuit breaker fault.
	5	DI5	Not in use by default. Can be used for eg, earth fault monitoring.
	6	DI6	**Reset**[3] (0 -> 1 = fault reset)
	7	DIIL	Not in use by default. Can be used for eg, emergency stop.
XDIO			Digital input/outputs
1 2 3 4	1	DIO1	Not in use by default
	2	DIO2	Not in use by default
	3	DIOGND	Digital input/output ground
	4	DIOGND	Digital input/output ground
XD24			Auxiliary voltage output
5 6 7 8	1	+24VD	+24 V DC 200 mA[5]
	2	DICOM	Digital input ground
	3	+24VD	+24 V DC 200 mA[5]
	4	DIOGND	Digital input/output ground
ON OFF	DICOM=DIOGND		Ground selection switch[6]
XAI			Analog inputs, reference voltage output
1 2 3 4 5 6 7	1	+VREF	10 V DC, R_L 1…10 kohm
	2	-VREF	-10 V DC, R_L 1…10 kohm
	3	AGND	Ground
	4	AI1+	Not in use by default. 0(2)…10 V, R_{in} > 200 kohm[7]
	5	AI1-	
	6	AI2+	Not in use by default. 0(4)…20 mA, R_{in} = 100 ohm[8]
	7	AI2-	
– ⊃	AI1		AI1 current/voltage selection switch
– ⊃	AI2		AI2 current/voltage selection switch
XAO			Analog outputs
1 2 3 4	1	AO1	**Zero** (no signal indicated)[3] 0…20 mA, R_L < 500 ohm
	2	AGND	
	3	AO2	**Zero** (not signal indicated)[3] 0…20 mA, R_L < 500 ohm
	4	AGND	
XPOW			External power input
1 2 3 4	1	+24VI	24 V DC, 2.05 A
	2	GND	
	3	+24VI	
	4	GND	
X12			Safety functions module connection (not in use in supply units)
X13			Control panel connection

Terminal	Description
X205	Memory unit connection

1) Must be set to ON when the supply unit is the first or last unit on the drive-to-drive (D2D) link. On intermediate units, set termination to OFF.

2) Use of the signal in the control program. When parameter 120.30 External charge enable has value Yes (default setting), the control program reserves this I/O terminal for external charging circuit control and monitoring, and parameters 110.24 RO1 source and 110.30 RO3 source are write-protected. If the value is No, you can use the I/O terminal for other purposes.

3) Use of the signal in the control program (fixed). See also the delivery-specific circuit diagrams.

4) This input only acts as a true Safe torque off input in inverter units. In other applications (such as a supply or brake unit), de-energizing the IN1 and/or IN2 terminal will stop the unit but not constitute a SIL/PL classified safety function.

5) Total load capacity of these outputs is 4.8 W (200 mA at 24 V) minus the power taken by DIO1 and DIO2.

6) Determines whether DICOM is separated from DIOGND (ie, common reference for digital inputs floats). ON: DICOM connected to DIOGND. OFF: DICOM and DIOGND separate.

7) Current [0(4)…20 mA, R_{in} = 100 ohm] or voltage [0(2)…10 V, R_{in} > 200 kohm] input selected by switch AI1. Change of setting requires reboot of control unit.

8) Current [0(4)…20 mA, R_{in} = 100 ohm] or voltage [0(2)…10 V, R_{in} > 200 kohm] input selected by switch AI2. Change of setting requires reboot of control unit.

Default I/O diagram of the supply control unit (UCU-22…24)

The diagram below shows the default I/O connections on the supply control unit (A51), and describes the use of the connections in the supply unit.

The wire size accepted by all screw terminals (for both stranded and solid wire) is 0.5 … 2.5 mm^2 (22…12 AWG). The tightening torque is 0.45 N·m (4 lbf·in).

Terminal			Description	
XD2D			Drive-to-drive link	
1	1	B	Not in use by default	
2	2	A		
3	3	BGND		
4	4	SHIELD		
	XD2D TERM		Drive-to-drive link termination switch.	
X485			RS485 connection	
5	5	B	Not in use by default	
6	6	A		
7	7	BGND		
8	8	SHIELD		
	X485 BIAS		X485 bias selection switch	
	X485 TERM		X485 termination switch	
XCAN			CAN bus	
9	9	CANH	Not supported	
10	10	CANL		
11	11	CGND		
12	12	SHIELD	Control cable shield	
	XCAN TERM		CANopen termination switch	
XRO1			Relay output 1	
11	11	NC1	Norm. closed	XRO1: **Charging** [1] (Energized = Closes charging contactor.) 250 V AC / 30 V DC, 2 A
12	12	COM1	Common	
13	13	NO1	Norm. open	
XRO2			Relay output 2	
21	21	NC2	Norm. closed	XRO2: **Fault (-1)** [2] 250 V AC / 30 V DC, 2 A
22	22	COM2	Common	
23	23	NO2	Norm. open	
XRO3			Relay output 3	

Terminal			Description	
31 32 33	31	NC3	Norm. closed	XRO3: **MCB ctrl**[1] (Energized = Closes main contactor/breaker.) 250 V AC / 30 V DC, 2 A
	32	COM3	Common	
	33	NO3	Norm. open	
XRO4			Relay output 4	
41 42 43	41	NC4	Norm. closed	XRO4: Not supported 250 V AC / 30 V DC, 2 A
	42	COM4	Common	
	43	NO4	Norm. open	
XSTO			Safe torque off[3]	
1 2 3 4	1	OUT	XSTO: Factory connection. Both circuits must be closed for the supply to start (STO1 and STO2 must be connected to OUT).	
	2	SGND		
	3	STO1		
	4	STO2		
XSTO OUT			Safe torque off connection (to inverter modules)	
5 6 7 8	5	OUT1	XSTO OUT: Not in use	
	6	SGND		
	7	OUT2		
	8	SGND		
XDI			Digital inputs	
1 2 3 4 5 6 7	1	DI1	**Temp fault**[4] (0 = overtemperature)	
	2	DI2	**Run / enable**[4] (1 = run / enable)	
	3	DI3	**MCB feedback**[1] (0 = main contactor/breaker open)	
	4	DI4	Not in use by default. Can be used for eg, auxiliary circuit breaker fault.	
	5	DI5	Not in use by default. Can be used for eg, earth fault monitoring.	
	6	DI6	**Reset**[4] (0 -> = fault reset)	
	7	DIIL	Not in use by default. Can be used for eg, emergency stop.	
XDIO			Digital input/outputs	
1 2 3 4	1	DIO1	Not in use by default	
	2	DIO2	Not in use by default	
	3	DIOGND	Digital input/output ground	
	4	DIOGND	Digital input/output ground	
XD24			Auxiliary voltage output	
5 6 7 8	5	+24VD	+24 V DC 200 mA[5]	
	6	DICOM	Digital input ground	
	7	+24VD	+24 V DC 200 mA[5]	
	8	DIGND	Digital input/output ground	
	DICOM=DIOGND		Ground selection switch. Determines whether DICOM is separated from DIOGND (ie, common reference for digital inputs floats). ON: DICOM connected to DIOGND. OFF: DICOM and DIOGND separate.	

Terminal			Description
XAI			Analog inputs, reference voltage output
1 2 3 4 5 6 7	1	+VREF	10 V DC, R_L 1…10 kohm
	2	-VREF	-10 V DC, R_L 1…10 kohm
	3	AGND	Ground
	4	AI1+	Not in use by default. 0(2)…10 V, R_{in} > 200 kohm [6]
	5	AI1-	
	6	AI2+	Not in use by default. 0(4)…20 mA, R_{in} = 100 ohm [7]
	7	AI2-	
XAO			Analog outputs
1 2 3 4	1	AO1	**Zero** (no signal indicated)[4] 0…20 mA, R_L < 500 ohm
	2	AGND	
	3	AO2	**Zero** (not signal indicated)[4] 0…20 mA, R_L < 500 ohm
	4	AGND	
XPOW			External power input
1 2 3 4	1	+24V	24 V DC, 2.05 A
	2	GND	
	3	+24V	
	4	GND	
XFSO			Safety functions module connection. Not in use by default.
XETH1			Ethernet ports for fieldbus. Not in use by default.
XETH2			
XETH3			Ethernet ports for tool communication. Not in use by default.
XETH4			
XPAN			Control panel connection
	XPAN TERM		Control panel connection termination switch
MEM			Memory unit connection

1) Use of the signal in the control program. When parameter 120.30 External charge enable has value Yes (default setting), the control program reserves this I/O terminal for external charging circuit control and monitoring, and parameters 110.24 RO1 source and 110.30 RO3 source are write-protected. If the value is No, you can use the I/O terminal for other purposes.
2) Use of the signal in the control program (fixed). See also the delivery-specific circuit diagrams.
3) This input only acts as a true Safe torque off input in inverter units. In other applications (such as a supply or brake unit), de-energizing the STO1 and/or STO2 terminal will stop the unit but not constitute a SIL/PL classified safety function.
4) Use of the signal in the control program (fixed). See also the delivery-specific circuit diagrams.
5) Total load capacity of these outputs is 4.8 W (200 mA at 24 V) minus the power taken by DIO1 and DIO2.
6) Current [0(4)…20 mA, R_{in} = 100 ohm] or voltage [0(2)…10 V, R_{in} > 200 kohm]. Change of setting requires reboot of control unit.
7) Current [0(4)…20 mA, R_{in} = 100 ohm] or voltage [0(2)…10 V, R_{in} > 200 kohm]. Change of setting requires reboot of control unit.

Additional information on the connections

Power supply for the control unit (XPOW)

The control unit is powered from a 24 V DC, 2 A supply (ZCU, BCU) or a 24 V DC, 2.9 A supply (UCU) through terminal block XPOW. With a type BCU/UCU control unit, a second supply can be connected to the same terminal block for redundancy.

Using a second supply is recommended, if:

- the control unit needs to be kept operational during input power breaks, for example, because of continuous fieldbus communication
- immediate restart is needed after a power break (that is, no control unit power-up delay is allowed).

The X485 connector (BCU)

The X485 connector provides a connection for the optional CIO-01 I/O module. Refer to CIO-01 I/O module for distributed I/O bus control user's manual (3AXD50000126880 [English]) for more information.

This diagram shows the wiring for the module.

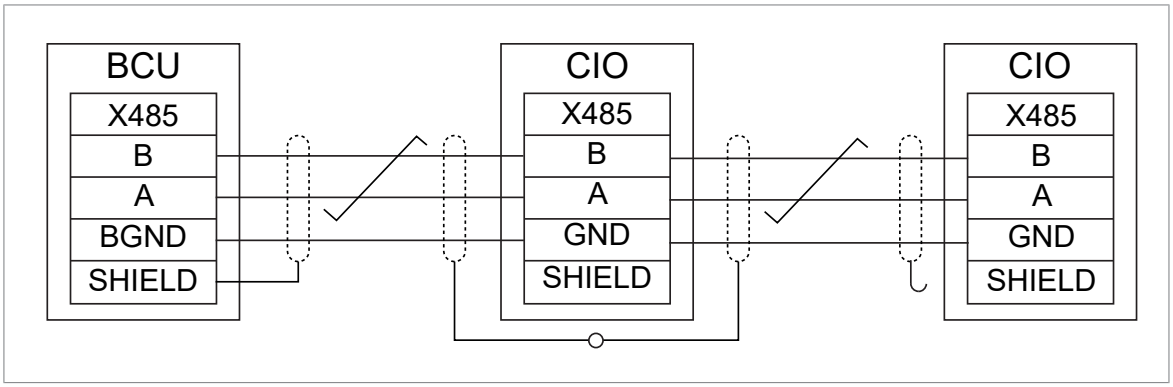

The X485 connector (UCU)

The X485 connector provides a connection for the optional CIO-01 I/O module. Refer to CIO-01 I/O module for distributed I/O bus control user's manual (3AXD50000126880 [English]) for more information.

This diagram shows the wiring for the module.

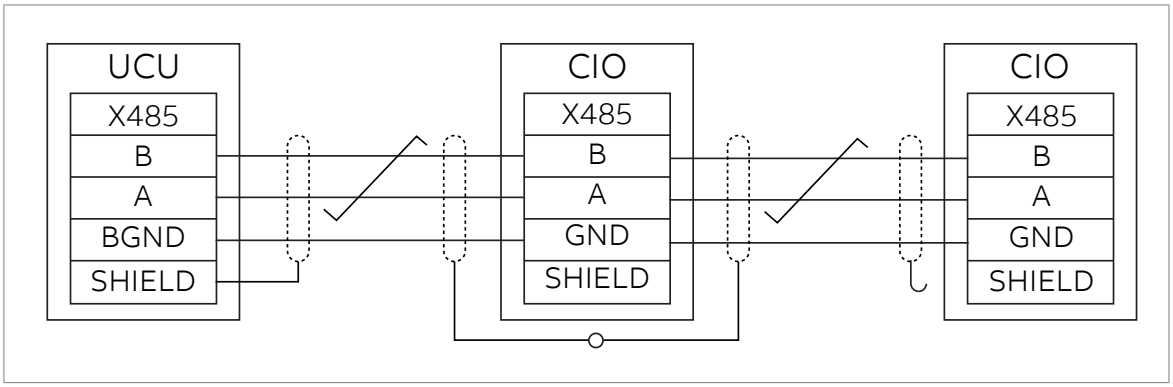

Terminate the I/O bus at its physical ends:

1. Set the termination resistor switch of the CIO-01 module on the end of the I/O bus to ON position.
2. Set the X485 termination switch (X485 TERM) of the UCU control unit to ON position to terminate the other end of the I/O bus.
3. Set the termination resistors of all other CIO-01 modules to OFF position.

Make sure that two devices in the I/O bus have the biasing on:

1. Set the X485 bias switch (X485 BIAS) of the UCU control unit to ON position.
2. Make sure that the termination resistor switch in one of the CIO-01 modules is set to ON position. This automatically starts the biasing.

Safe torque off (XSTO, XSTO OUT)

Note: The XSTO input only acts as a true Safe torque off input on the inverter control unit. De-energizing the STO input terminals of other units (supply, DC/DC converter, or brake unit) will stop the unit but not constitute a SIL/PL classified safety function.

FSO safety functions module connection (X12, with BCU only)

Refer to the applicable FSO module user's manual. Note that the FSO safety functions module is not used in supply, DC/DC converter or brake units.

Note: Control units that have a sticker with the text “No FSO support” are not compatible with the FSO safety functions module.

SDHC memory card slot

The BCU control unit has an on-board data logger that collects real-time data from the power modules to help fault tracing and analysis. The data is stored onto the SDHC memory card inserted into the SD CARD slot and can be analyzed by ABB service personnel.

MicroSDHC memory card slot

The UCU-22…24 has an on-board data logger that collects real-time data from the power modules to help fault tracing and analysis. The data is stored onto the microSDHC memory card inserted into the UMU memory unit and can be analyzed by ABB service personnel.

Connector data

Power supply (XPOW)	Connector pitch 5 mm, wire size 0.5 … 2.5 mm² (22…12 AWG) Maximum tightening torque 0.45 N·m (4 lbf·in) 24 V (±10%) DC, 2 A (BCU) 19…32 V DC, 2.9 A (UCU-22…24) External power input. Two supplies can be connected to the BCU and UCU-22…24 control units for redundancy.
Relay outputs RO1…RO3 (XRO1…XRO3 [BCU]) Relay outputs RO1…RO4 (XRO1…XRO4 [UCU-22…24])	Connector pitch 5 mm, wire size 0.5 … 2.5 mm² (22…12 AWG) Maximum tightening torque 0.45 N·m (4 lbf·in) 250 V AC / 30 V DC, 2 A Protected by varistors
+24 V output (XD24:2 and XD24:4)	Connector pitch 5 mm, wire size 0.5 … 2.5 mm² (22…12 AWG) Maximum tightening torque 0.45 N·m (4 lbf·in) Total load capacity of these outputs is 4.8 W (200 mA / 24 V) minus the power taken by DIO1 and DIO2.
Digital inputs DI1…DI6 (XDI:1…XDI:6)	Connector pitch 5 mm, wire size 0.5 … 2.5 mm² (22…12 AWG) Maximum tightening torque 0.45 N·m (4 lbf·in) 24 V logic levels: “0” < 5 V, “1” > 15 V R_{in}: 2.0 kohm Input type: NPN/PNP (DI1…DI5), PNP (DI6) Hardware filtering: 0.04 ms, digital filtering up to 8 ms (BCU) I_{max}: 15 mA (DI1…DI5), 5 mA (DI6)
Start interlock input DIIL (XDI:7)	Connector pitch 5 mm, wire size 0.5 … 2.5 mm² (22…12 AWG) Maximum tightening torque 0.45 N·m (4 lbf·in) 24 V logic levels: "0" < 5 V, "1" > 15 V R_{in}: 2.0 kohm Input type: NPN/PNP Hardware filtering: 0.04 ms, digital filtering up to 8 ms
Digital inputs/outputs DIO1 and DIO2 (XDIO:1 and XDIO:2) Input/output mode selection by parameters. DIO1 can be configured as a frequency input (0…16 kHz with hardware filtering of 4 microseconds) for 24 V level square wave signal (sinusoidal or other wave form cannot be used). (BCU) DIO1 can be configured as a frequency input (0…100 kHz with hardware filtering of 4 microseconds) for 24 V level square wave signal (sinusoidal or other wave form cannot be used). (UCU-22…24) In some control programs, DIO2 can be configured as a 24 V level square wave frequency output. Refer to the firmware manual, parameter group 11.	Connector pitch 5 mm, wire size 0.5 … 2.5 mm² (22…12 AWG) Maximum tightening torque 0.45 N·m (4 lbf·in) As inputs: 24 V logic levels: "0" < 5 V, "1" > 15 V. R_{in}: 2.0 kohm. Filtering: 1 ms. As outputs: Total output current from +24VD is limited to 200 mA 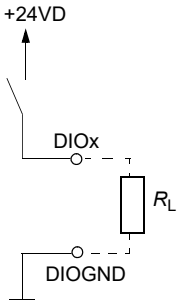

Reference voltage for analog inputs +VREF and -VREF (XAI:1 and XAI:2)	Connector pitch 5 mm, wire size 0.5 … 2.5 mm^2 (22…12 AWG) Maximum tightening torque 0.45 N·m (4 lbf·in) 10 V ±1% and -10 V ±1%, R_{load} 1…10 kohm Maximum output current: 10 mA
Analog inputs AI1 and AI2 (XAI:4 … XAI:7). Current/voltage input mode selection by switches (BCU) Current/voltage input mode selection by parameters 12.15 AI1 unit selection and 12.25 AI2 unit selection (UCU)	Connector pitch 5 mm, wire size 0.5 … 2.5 mm^2 (22…12 AWG) Maximum tightening torque 0.45 N·m (4 lbf·in) Current input: -20…20 mA, R_{in} = 100 ohm Voltage input: -10…10 V, R_{in} > 200 kohm Differential inputs, common mode range ±30 V Sampling interval per channel: 0.25 ms Hardware filtering: 0.25 ms Resolution: 11 bit + sign bit Inaccuracy: 1% of full scale range
Analog outputs AO1 and AO2 (XAO)	Connector pitch 5 mm, wire size 0.5 … 2.5 mm^2 (22…12 AWG) Maximum tightening torque 0.45 N·m (4 lbf·in) 0…20 mA, R_{load} < 500 ohm Frequency range: 0…500 Hz Resolution: 11 bit + sign bit Inaccuracy: 2% of full scale range
XD2D connector	Connector pitch 5 mm, wire size 0.5 … 2.5 mm^2 (22…12 AWG) Maximum tightening torque 0.45 N·m (4 lbf·in) Physical layer: RS-485 Transmission rate: 8 Mbit/s Cable type: Shielded twisted-pair cable with a twisted pair for data and a wire or another pair for signal ground (nominal impedance 100 … 165 ohm, for example Belden 9842) Maximum length of link: 50 m (164 ft) Termination by switch
RS-485 connection (X485)	Connector pitch 5 mm, wire size 0.5 … 2.5 mm^2 (22…12 AWG) Maximum tightening torque 0.45 N·m (4 lbf·in) Physical layer: RS-485 Cable type: Shielded twisted-pair cable with a twisted pair for data and a wire or another pair for signal ground (nominal impedance 100 … 165 ohm, for example Belden 9842) Maximum length of link: 50 m (164 ft) Termination and bias by switch (X485 TERM and X485 BIAS) (UCU-22…24)
CAN connection (XCAN [UCU-22…24])	Connector pitch 5 mm, wire size 0.5 … 2.5 mm^2 (22…12 AWG) Maximum tightening torque 0.45 N·m (4 lbf·in) Termination by switch (XCAN TERM) This connection is not supported by the firmware.

Safe torque off connection (XSTO)	Connector pitch 5 mm, wire size 0.5 … 2.5 mm^2 (22…12 AWG) Maximum tightening torque 0.45 N·m (4 lbf·in) Input voltage range: -3…30 V DC Logic levels: "0" < 5 V, "1" > 17 V. **Note:** For the unit to start, both connections must be “1”. This applies to all control units (including drive, inverter, supply, brake, DC/DC converter etc. control units), but SIL/PL classified Safe torque off functionality is only achieved through the XSTO connector of the drive/inverter control unit. Current consumption: 10 mA (continuous) per STO channel (UCU-22…24). The number of parallel drive/inverter modules does not have an effect on the current consumption. Current consumption: 66 mA (continuous) per STO channel per drive/inverter module (BCU) EMC (immunity) according to IEC 61326-3-1 and IEC 61800-5-2
Safe torque off output (XSTO OUT)	Connector pitch 5 mm, wire size 0.5 … 2.5 mm^2 (22…12 AWG) Maximum tightening torque 0.45 N·m (4 lbf·in) To STO connector of inverter module.
Control panel connection (X13 [BCU]) Control panel connection (XPAN [UCU-22…24])	Connector: RJ-45 Cable length < 100 m (328 ft) (BCU) Cable length < 50 m (164 ft) (UCU-22…24) Termination by switch (XPAN TERM) (UCU-22…24)
Ethernet connection (XETH [BCU]) Fieldbus Ethernet connection with internal switch (XETH1 and XETH2 [UCU-22…24]) Tool Ethernet connection with internal switch (XETH3 and XETH4 [UCU-22…24])	Connector: RJ-45 This connection is not supported by the firmware (BCU) Cable type: minimum requirement CAT5e (UCU-22…24)
SDHC memory card slot (SD CARD [BCU])	Memory card type: SDHC Maximum memory size: 4 GB
microSDHC memory card slot (microSDHC CARD [UCU-22…24])	Memory card type: microSDHC (minimum of class 4 speed grade) Supported memory size: 4 GB…32 GB
Battery	Real-time clock battery type: BR2032
The terminals of the control unit fulfill the Protective Extra Low Voltage (PELV) requirements. The PELV requirements of a relay output are not fulfilled if a voltage higher than 48 V is connected to the relay output.	

BCU ground isolation diagram

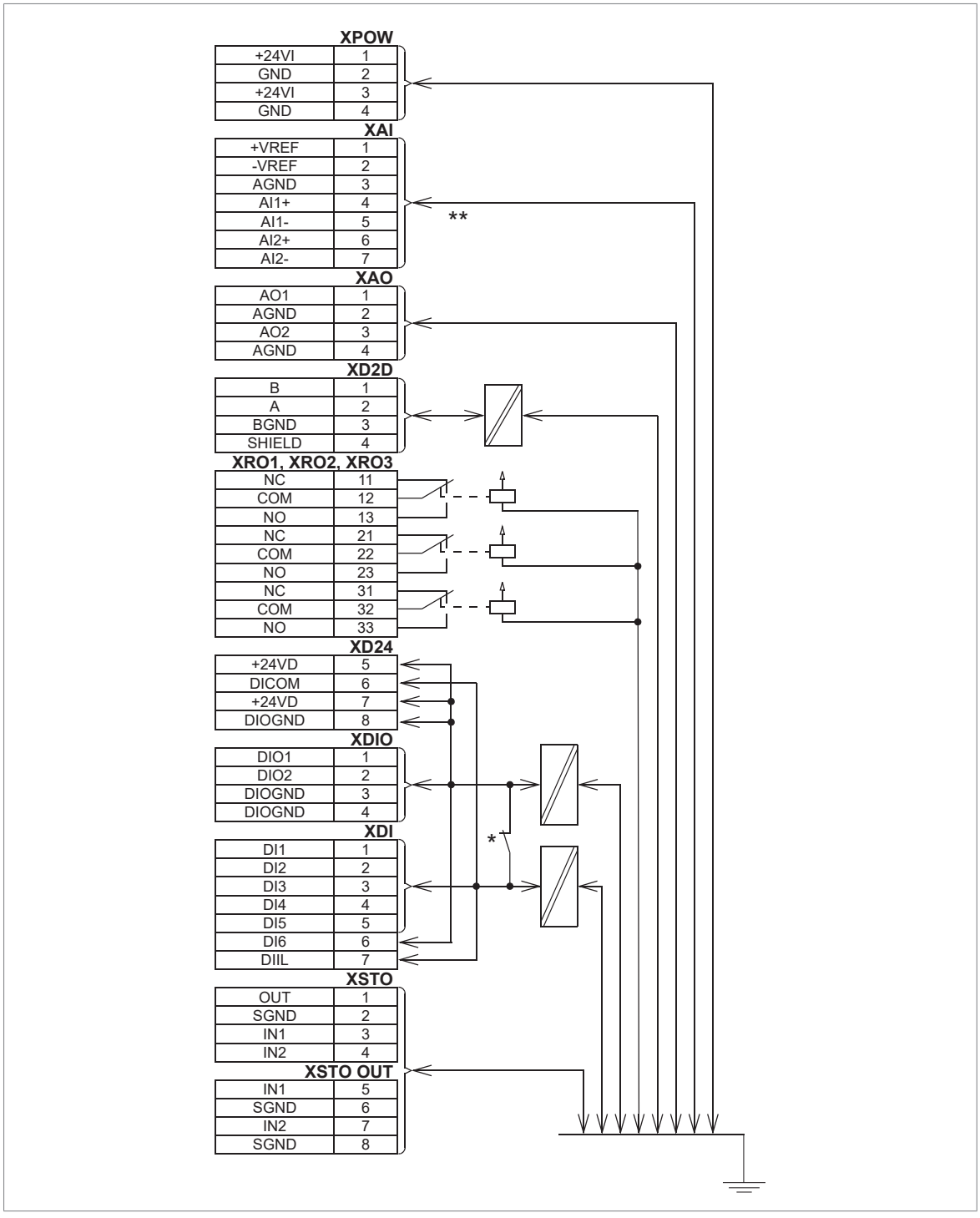

*Ground selector (DICOM=DIOGND) settings

DICOM=DIOGND: ON All digital inputs share a common ground (DICOM connected to DIOGND). This is the default setting.
DICOM=DIOGND: OFF Ground of digital inputs DI1…DI5 and DIIL (DICOM) is isolated from DIO signal ground (DIOGND). Isolation voltage 50 V.

**The maximum common mode voltage between each AI input and AGND is +30 V

UCU-22…24 ground isolation diagram

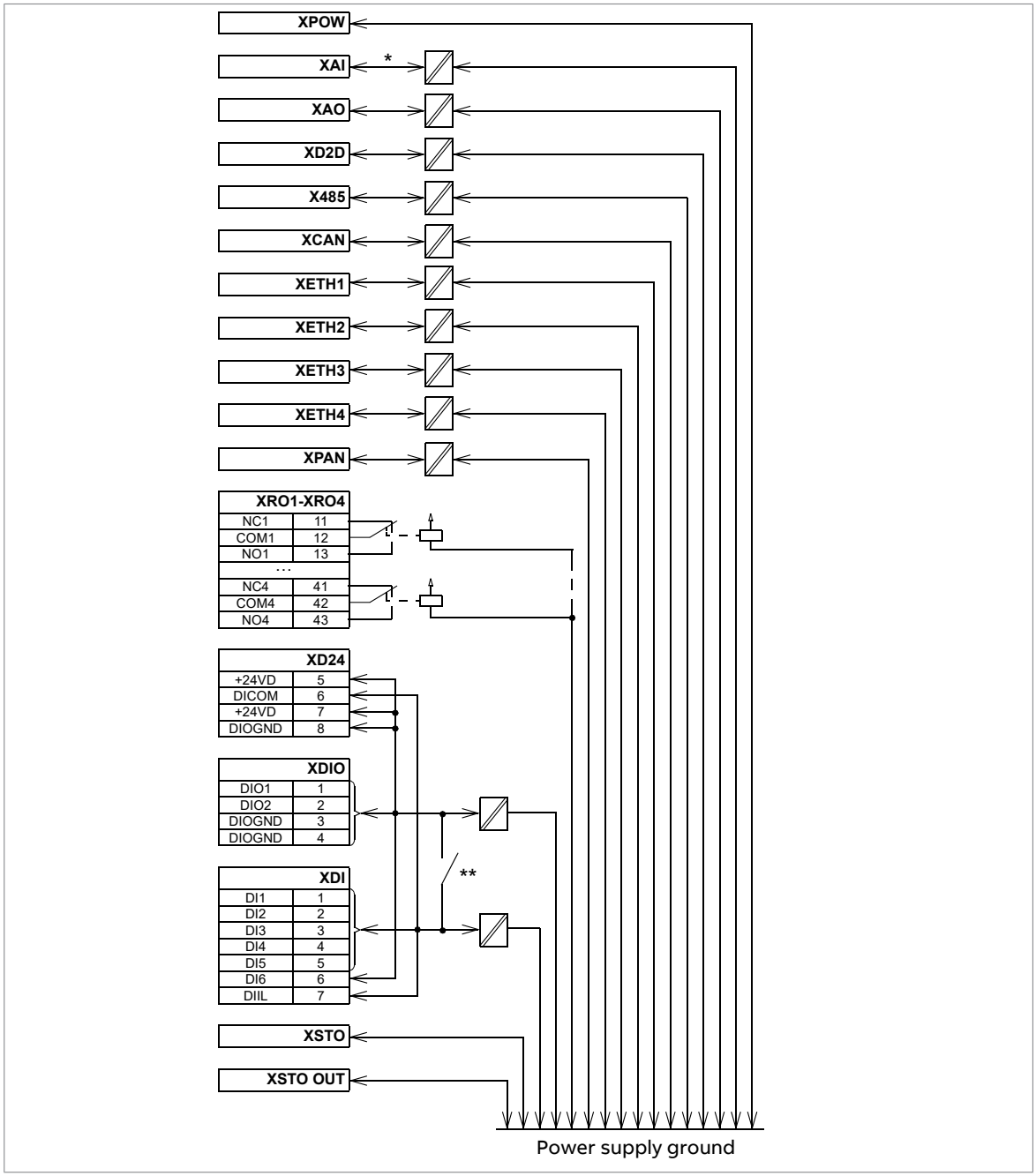

*The maximum common mode voltage between each AI input and AGND is ±30 V

****Ground selector (DICOM=DIOGND) settings**

DICOM=DIOGND: ON All digital inputs share a common ground (DICOM connected to DIOGND). This is the default setting.
DICOM=DIOGND: OFF Ground of digital inputs DI1…DI5 and DIIL (DICOM) is isolated from DIO signal ground (DIOGND). Isolation voltage 50 V.

7

Installation checklist

Contents of this chapter

This chapter contains a checklist for the mechanical and electrical installation of the drive.

Checklist

Examine the mechanical and electrical installation of the drive before start-up. Go through the checklist together with another person.

WARNING!
Obey the safety instructions of the drive. If you ignore them, injury or death, or damage to the equipment can occur. If you are not a qualified electrical professional, do not do installation, commissioning or maintenance work.

WARNING!
Stop the drive and do the steps in section Electrical safety precautions (page 142) before you start the work.

Make sure that ...	☑
The ambient operating conditions meet the drive ambient conditions specification and enclosure rating (IP code).	☐
The supply voltage matches the nominal input voltage of the drive. See the type designation label.	☐
The insulation resistance of the input power cable, motor cable and motor is measured according to local regulations and the manuals of the drive.	☐
The drive cabinet is attached to the floor, and if necessary due to vibration etc, also by its top to the wall or roof.	☐
The drive module is fastened properly to the enclosure.	☐

Make sure that ...	☑
If the drive is connected to a network other than a symmetrically grounded TN-S system: You have done all the required modifications (for example, you may need to disconnect the EMC filter or ground-to-phase varistor) See the electrical installation instructions in the supply unit manual.	☐
The enclosures of the equipment in the cabinet have proper galvanic connection to the cabinet protective earth (ground) busbar; The connection surfaces at the fastening points are bare (unpainted) and the connections are tight, or separate grounding conductors have been installed.	☐
The main circuit connections inside the drive cabinet correspond to the circuit diagrams.	☐
The control unit has been connected. See the circuit diagrams.	☐
Appropriate AC fuses and main disconnecting device are installed.	☐
There is an adequately sized protective earth (ground) conductor(s) between the drive and the switchboard, the conductor is connected to correct terminal, and the terminal is tightened to the correct torque. Grounding has also been measured according to the regulations.	☐
If the drive is equipped with a DC/DC converter unit: There is an adequately sized protective earth (ground) conductor between the energy storage and the DC/DC converter, the conductor is connected to the correct terminal, and the terminal is tightened to the correct torque. Proper grounding has also been measured according to the regulations.	☐
If the drive is equipped with a DC/DC converter unit: The energy storage cable is connected to the correct terminals of the DC/DC converter and energy storage, and the terminals are tightened to the correct torque.	☐
If the drive is equipped with a DC/DC converter unit: The energy storage is equipped with fuses for protecting the energy storage cable in a cable short-circuit situation.	☐
If the drive is equipped with a DC/DC converter unit: The energy storage is equipped with a disconnecting device.	☐
The input power cable is connected to the correct terminals, the phase order is correct, and the terminals are tightened to the correct torque.	☐
There is an adequately sized protective earth (ground) conductor between the motor and the drive. The conductor is connected to the correct terminal, and the terminal is tightened to the correct torque. Grounding has also been measured according to the regulations.	☐
The motor cable is connected to the correct terminals, the phase order is correct, and the terminals are tightened to the correct torque.	☐
The motor cable is routed away from other cables.	☐
No power factor compensation capacitors are connected to the motor cable.	☐
If an external brake resistor is connected to the drive: There is an adequately sized protective earth (ground) conductor between the brake resistor and the drive, and the conductor is connected to the correct terminal, and the terminals are tightened to the correct torque. Grounding has also been measured according to the regulations.	☐
If an external brake resistor is connected to the drive: The brake resistor cable is connected to the correct terminals, and the terminals are tightened to the correct torque.	☐
If an external brake resistor is connected to the drive: The brake resistor cable is routed away from other cables.	☐
The control cables are connected to the correct terminals, and the terminals are tightened to the correct torque.	☐
If a drive bypass connection will be used: The direct-on-line contactor of the motor and the drive output contactor are either mechanically and/or electrically interlocked, that is, they cannot be closed at the same time. A thermal overload device must be used for protection when bypassing the drive. Refer to local codes and regulations.	☐
There are no tools, foreign objects or dust from drilling inside the drive.	☐
The terminal box cover of the motor is in place. Cabinet shrouds are in place and doors are closed.	☐
The motor and the driven equipment are ready for power-up.	☐

Make sure that ...	☑
The coolant connections between cubicles (if any) and to the cooling circuit are tight.	☐
If the drive is equipped with a cooling unit: Make sure that the mechanical and electrical installation of the cooling unit is completed. Refer to the cooling unit documentation.	☐

8

Start-up

Contents of this chapter

This chapter instructs how to start up the IGBT supply unit.

The instructions are valid for the example IGBT supply unit with ACS880-204LC IGBT supply modules. The default device designations (if any) are given in square brackets, for example, main circuit breaker [Q1]. The same device designations are also used in the circuit diagrams, typically. They refer to the circuit diagram of the example installation by ABB.

Note: These instructions do not cover all possible cabinet constructions. Always refer to the delivery-specific circuit diagrams when proceeding with the start-up.

WARNING!
Only qualified electricians are allowed to do the work described in this chapter. Read the complete safety instructions and repeat the steps described in section Electrical safety precautions (page 142). The complete safety instructions are given in ACS880 liquid-cooled multidrive cabinets and modules safety instructions (3AXD50000048633 [English]). Ignoring the instructions can cause physical injury or death, or damage to the equipment.

WARNING!
Before you activate the automatic fault reset or automatic restart functions of the drive control program, make sure that no dangerous situations can occur. These functions reset the drive automatically and continue operation after a fault or supply break.

If you select an external source for the start command and it is on, the drive will start immediately after fault reset. See the firmware manual.

Start-up procedure

Tasks	☑
Safety	
WARNING! Obey the safety instructions during the start-up procedure. See ACS880 liquid-cooled multidrive cabinets and modules safety instructions (3AXD50000048633 [English]). Only qualified electricians are allowed to start-up the drive.	☐
Checks/Settings with no voltage connected	
WARNING! Ensure that the disconnector of the supply transformer is locked to the off (0) position, that means no voltage is, or can not be, connected to drive inadvertently. The no-load current of the IGBT supply unit must be taken into account if pretests (eg, factory tests) are made on the IGBT supply unit by using a temporary main AC supply. The no-load current circulates between the supply network and the LCL filter capacitors and therefore stresses the supply transformer. To avoid supply transformer overload, the supply transformer must be dimensioned according to 15% of IGBT supply unit nominal current. The transformer should be dedicated for the IGBT supply unit only, no other (sensitive) load shall be connected in same transformer secondary to avoid disturbance and malfunction. In case a generator is used as a supply, generator nominal power $P_{gen} > 0.3 \times P_{N,ISU}$. 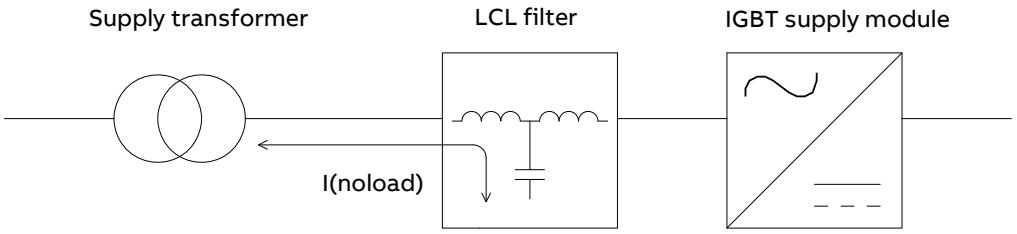 	☐
Check that the main disconnecting device (main switch-disconnector or main circuit breaker) [Q1] is switched off.	☐
Check the mechanical and electrical installation. See chapter Installation checklist.	☐
Check the settings of breakers/switches in the auxiliary circuits.	☐
Drives with a charging switch [Q3] and a DC switch-disconnector for line-up charging [Q40]: Open the charging circuit switch [Q3] and the DC switch-disconnector for line-up charging [Q40]. Open DC switch and unit charging switches, if voltage from the DC-side is sufficient.	☐
If time relays, or relays with delayed make contact or break contact are used in emergency stop circuits, check the relay time settings. See delivery-specific circuit diagrams and safety function specific documentation (if applicable).	☐
Disconnect the unfinished or unchecked 230 V AC cables that lead from the terminal blocks to the outside of the equipment.	☐
Check that both circuits of STO terminals on the supply control unit are closed (IN1 and IN2 must be connected to OUT). The supply unit cannot start is either circuit is open. Refer to the wiring diagrams delivered with the drive and chapter The control unit.	☐
Check that both channels of STO IN (X52) connector on IGBT supply module are connected to 24 V DC for the supply unit to start.	☐

Tasks	☑
Starting and checking the cooling system	
Fill up and bleed the internal cooling circuit. Start the cooling unit up. See section Filling up and bleeding the internal cooling circuit (page 296).	☐
Check the cooling system for leaks. Make sure that cooling circuit joints at the shipping split joining cubicles are tight and that all drain valves have been closed.	☐
Make sure that the coolant can flow freely in all cubicles. Make sure that the drive system cools down.	☐
Powering up the auxiliary circuit of the drive	
Make sure that it is safe to connect voltage. Ensure that: • nobody is working on the unit or circuits that have been wired from outside into the cabinets • covers of the motor terminal boxes are on.	☐
Close the circuit breakers supplying the auxiliary circuits.	☐
Close the cabinet doors.	☐
Close the main breaker of the supply transformer.	☐
Switch the auxiliary voltage switch on.	☐
Setting up the supply unit parameters	
Check the correct voltage range, parameter 195.01 Supply voltage.	☐
If your supply unit consists of more than one module, parameters 195.30 Parallel type filter and 195.31 Parallel connection rating id need to be set. First, select the correct voltage range with parameter 195.30 Parallel type filter. Then, select the correct supply unit type with parameter 195.31 Parallel connection rating id. If you need more information on the use of the control panel, see ACS-AP-I, -S, -W and ACH-AP-H, -W Assistant control panels user's manual (3AUA0000085685 [English]).	☐
Switch the control panel to the remote mode (Loc/Rem key) to enable control of the supply unit with the operating switch [S21].	☐
Powering up the main circuit of the drive	
WARNING! If the drive is equipped with a brake unit, make sure there are inverters connected to the intermediate circuit before closing the main circuit breaker [Q1]. A rule of thumb: The sum capacitance of the inverters connected must be at least 50% of the sum capacitance of all inverters. If there is not enough capacitive load at start, the DC voltage will overshoot the overvoltage limit, causing immediate start of the brake unit. Constant braking will overload brake choppers and resistors and cause overheating.	☐
Units with a DC switch-disconnector [Q11]: Make sure that all DC switch-disconnectors [Q11] are closed and charging switches [Q10] are open in all IGBT supply module cubicles. See also Additional instructions for closing the DC switch-disconnector (page 191).	☐
Switch the main disconnecting device (main switch-disconnector or main circuit breaker) [Q1] on.	☐
Drives with a charging switch [Q3] and a DC switch-disconnector for line-up charging [Q40]: Close the charging switch [Q3] and the DC switch-disconnector for line-up charging [Q40].	☐
Turn the operating switch [S21] to on (1) position to activate the Run enable signal.	☐

Tasks	☑
Validating the safety functions	
Validate the operation of safety functions (for example, emergency stop). **WARNING!** The safety functions are not safe before they are validated according to the instructions. See the function-specific manual for the validation tasks. Safety functions are optional. See the function-specific manual for the validation tasks.	☐
On-load checks	
Check that the supply module cooling fan rotates freely in the right direction.	☐
Validate the operation of safety functions (for example, emergency stop). **WARNING!** The safety functions are not safe before they are validated according to the instructions. Safety functions are optional. See the function-specific manual for the validation tasks.	☐

Switching the supply unit off

1. Stop the motors connected to inverter units.
2. Deactivate the Run enable signal to open the main circuit breaker [Q1]. This can be done, for example, with an operating switch [S21].

Additional instructions for closing the DC switch-disconnector

If the DC bus is not energized and the main DC switch-disconnector [Q11] is in OFF position, the main DC switch-disconnector [Q11] is mechanically locked to OFF position by interlock [K11]. In order to get the supply unit started there are two possibilities: the DC bus is powered up by another supply unit (if applicable), or the DC bus must be powered by means of the local charging control switch [S4], which forces the charging circuit on.

IGBT supply modules can then be charged as follows:

Note: Before local operation of the charging circuit via local charging control switch [S4], make sure that the main breaker(s) of the supply unit is racked in and the DC switch-disconnector for line-up charging [Q40] is closed.

- Force the charging circuit of the unit on via setting the local charging control switch [S4] to position “1”.
- Wait for a few seconds for the DC bus charging up to nominal voltage level.
- Charge the IGBT supply modules: close the charging switch [Q10] of the units that are to be powered up.
- After the IGBT supply modules are charged and the charging light [P11] on the cabinet door illuminates, the lock of DC switch-disconnector [Q11] is released. The main DC switch-disconnector [Q11] can now be closed, and the charging switch [Q10] opened.
- Repeat this for all IGBT supply module cubicles belonging to this supply unit.
- After that, set the local charging control switch [S4] back into OPEN position and the DC bus will be discharged again.

When the DC switch-disconnector [Q11] is in ON position, follow the normal start-up procedure to charge the line-up and to start the operation of the supply unit.

Charging sequence

Line-up charging: For details on charging sequence, refer to Powering up the main circuit of the drive in the start-up procedure above.

Unit charging: For details on charging sequence, refer to BSFC-02C and BSFC-12C charging controllers hardware manual (3AXD50000027498 [English]).

9

Maintenance

Contents of this chapter

This chapter instructs how to maintain the IGBT supply module and how to interpret its fault conditions. The information is valid for ACS880-204LC IGBT supply modules and the cabinet construction examples presented in this manual.

WARNING!
Only qualified electricians are allowed to do the work described in this chapter. Read the complete safety instructions before you install, commission, use or service the converter. The complete safety instructions are given in ACS880 liquid-cooled multidrive cabinets and modules safety instructions (3AXD50000048633 [English]).

Maintenance intervals

The tables below show the maintenance tasks which can be done by the end user. For ABB Service offering, refer to www.abb.com/drivesservices or consult your local ABB Service representative (www.abb.com/searchchannels).

Description of symbols

Action	Description
I	Inspection (visual inspection and maintenance action if needed)
P	Performance of on/off-site work (commissioning, tests, measurements or other work)
R	Replacement

Recommended maintenance intervals after start-up

Maintenance task/object	Years from start-up													
	0	1	2	3	4	5	6	7	8	9	10	11	12	...
Coolant														
Checking coolant antifreeze concentration		P	P	P	P	P	P	P	P	P	P	P	P	
Checking coolant quality			P		P		P		P		P		P	
Coolant draining and replacement							R						R	
Cooling fan and fan control														
Cooling fans 230 V AC 50/60 Hz and 24 V DC										R				
Cooling fans 115 V AC 50/60 Hz							R						R	
Frame R7i: Internal cooling fan for circuit boards										R				
CIO module for fan control (230 V AC) [1]										R				
CIO module for fan control (115 V AC) [1]							I/R						R	
Aging														
Control unit battery							R						R	
Control panel battery										R				
Connections and environment														
Quality of supply voltage		P	P	P	P	P	P	P	P	P	P	P	P	
Spare parts														
Spare parts		I	I	I	I	I	I	I	I	I	I	I	I	I
DC circuit capacitor reforming (spare modules and spare capacitors)		P	P	P	P	P	P	P	P	P	P	P	P	
Inspections by user														
Checking tightness of cable and busbar terminals. Tightening if needed.		I	I	I	I	I	I	I	I	I	I	I	I	I
Checking ambient conditions (dustiness, corrosion, temperature)		I	I	I	I	I	I	I	I	I	I	I	I	I
Checking coolant pipe connections		I	I	I	I	I	I	I	I	I	I	I	I	I
Other														
ABB SACE main circuit breaker maintenance		I	I	I	I	I	I	I	I	I	I	I	I	I
ABB contactors maintenance		I	I	I	I	I	I	I	I	I	I	I	I	I
Functional safety														
Safety function test	I See the maintenance information of the safety function.													
Safety component expiry (Mission time, T_M)	20 years													
														3AXD10000578918 rev T

[1] To replace CIO module or reset fan counters, see CIO-01 I/O module and distributed I/O bus user's manual (3AXD50000126880 [English]).

Note:

- Maintenance and component replacement intervals are based on the assumption that the equipment is operated within the specified ratings and ambient conditions. ABB recommends annual drive inspections to ensure the highest reliability and optimum performance.
- Long term operation near the specified maximum ratings or ambient conditions may require shorter maintenance intervals for certain components. Consult your local ABB Service representative for additional maintenance recommendations.

Maintenance timers and counters

The control program has maintenance timers and counters that can be configured to generate a warning when a pre-defined limit is reached. Each timer/counter can be set to monitor any parameter. This feature is especially useful as a service reminder. For more information, see the firmware manual.

Cooling system

For instructions on coolant replacement and checking the cooling system, see chapter Internal cooling circuit (page 293).

Cabinet

Cleaning the interior of the cabinet

WARNING!
Obey the safety instructions of the drive. If you ignore them, injury or death, or damage to the equipment can occur. If you are not a qualified electrical professional, do not do installation, commissioning or maintenance work.

WARNING!
Use a vacuum cleaner with antistatic hose and nozzle, and wear a grounding wristband. Using a normal vacuum cleaner creates static discharges which can damage circuit boards.

1. Stop the drive and do the steps in section Electrical safety precautions (page 142) before you start the work.
2. Open the cabinet door.
3. Clean the interior of the cabinet. Use a vacuum cleaner and a soft brush.
4. Clean the air inlets of the fans and air outlets of the modules (top).
5. Clean the air inlet gratings (if any) on the door.
6. Close the door.

Cooling fans

The lifespan of the cooling fans of the drive depends on running time, ambient temperature and dust concentration. See the firmware manual for the actual signal which indicates the running time of the cooling fan. Reset the running time signal after fan replacement. See also CIO-01 I/O module and distributed I/O bus user's manual (3AXD50000126880 [English]).

Replacement fans are available from ABB. Do not use other than ABB-specified spare parts.

Frame R7i – internal module fan replacement

WARNING!
Obey the safety instructions of the drive. If you ignore them, injury or death, or damage to the equipment can occur. If you are not a qualified electrical professional, do not do installation, commissioning or maintenance work.

WARNING!
Use the required personal protective equipment. Wear protective gloves and long sleeves. Some parts have sharp edges.

1. Stop the drive and do the steps in section Electrical safety precautions (page 142) before you start the work.
2. Detach and move aside the wiring in front of the module.
3. Remove the four screws that hold the faceplate of the module. Remove the faceplate.
4. Remove the two screws that attach the circuit board holder to the module frame.
5. Carefully pull the circuit board holder outward until you have access to the cooling fan at the bottom of the holder. Detach the wiring coming to the circuit boards if necessary.
6. Disconnect the wiring of the fan.
7. Remove the two screws that hold the fan. Remove the fan.
8. Install a new fan in reverse order to the above. Note that the direction of airflow is up.

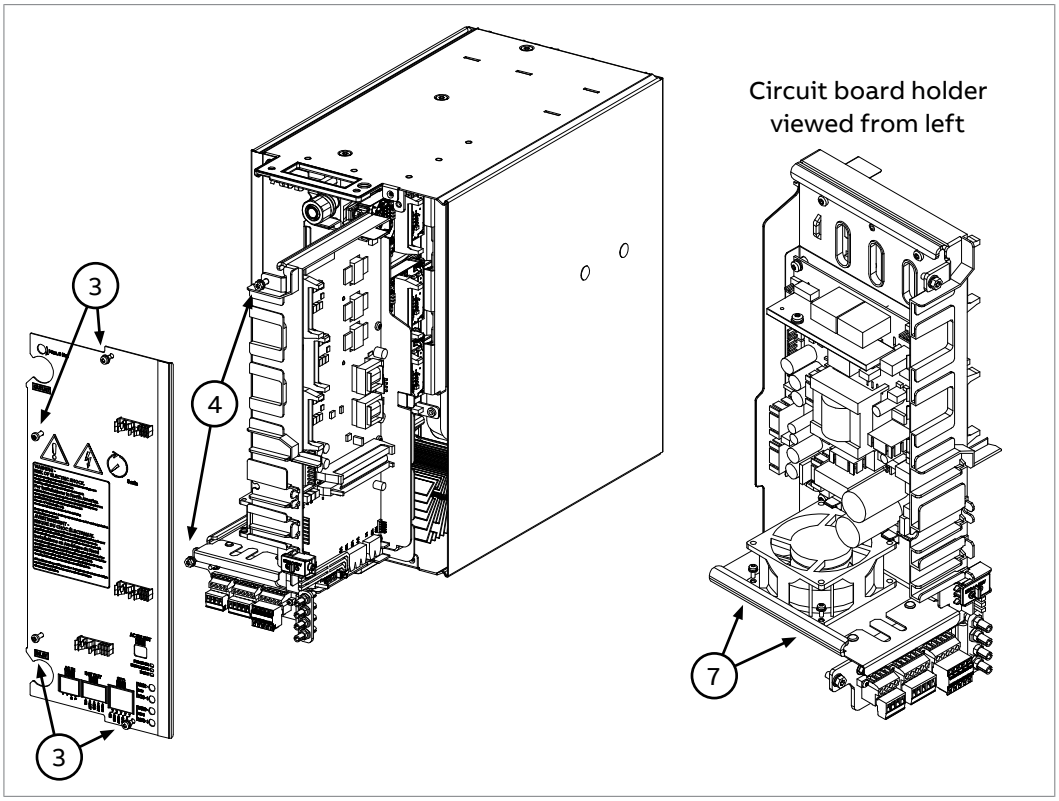
3
4
3
Circuit board holder
viewed from left
7

Replacing the cooling fan of the IGBT supply module (frame R8i)

WARNING!
Obey the safety instructions of the drive. If you ignore them, injury or death, or damage to the equipment can occur. If you are not a qualified electrical professional, do not do installation, commissioning or maintenance work.

WARNING!
Use the required personal protective equipment. Wear protective gloves and long sleeves. Some parts have sharp edges.

1. Stop the drive and do the steps in section Electrical safety precautions (page 142) before you start the work.
2. Remove any shrouding in front of the cooling fan in case of marine construction.
3. Disconnect the fan wiring. Remove the CIO module.
4. Remove the two retaining screws (a).
5. Pull the fan outwards to separate it from the heat exchanger housing.
6. Install new fan in reverse order. Align the guide pins (b) at the rear of the fan cowling with the slots (c) in the module bottom guide, then install the retaining screws (a).

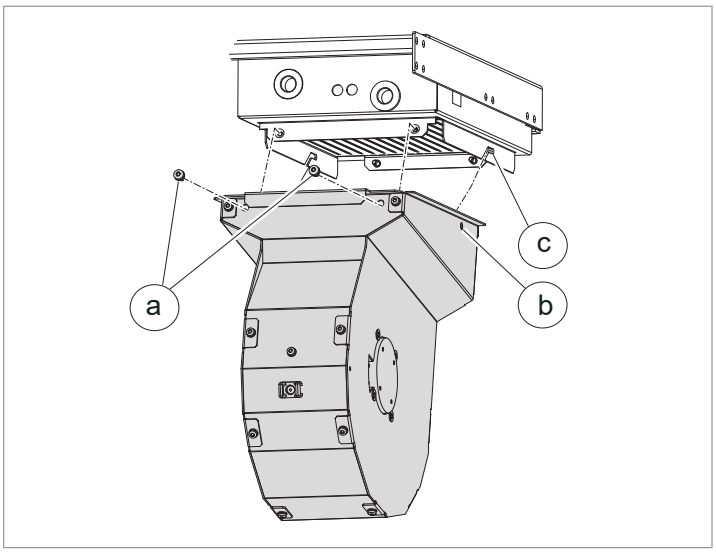

Replacing the cabinet cooling fan (frame R7i)

WARNING!
Wear protective gloves and long sleeves. Some parts have sharp edges.

1. Repeat the steps described in section Electrical safety precautions (page 142).
2. Remove any shrouding in front of the cooling fan.
3. Remove the four fastening screws.
4. Pull the fan housing outwards.
5. Disconnect the fan wiring.
6. Install a new fan in reverse order.

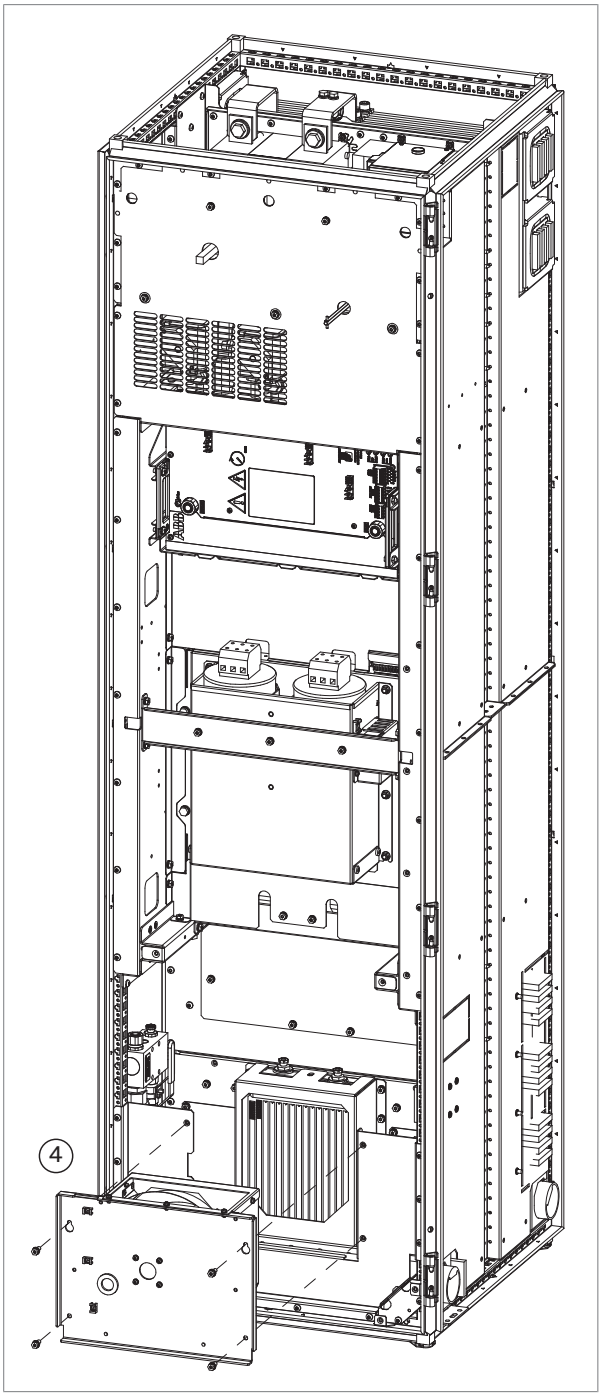
4

Replacing the cooling fan of the LCL filter (frame R8i)

WARNING!
Wear protective gloves and long sleeves. Some parts have sharp edges.

1. Repeat the steps described in section Electrical safety precautions (page 142).
2. Remove any shrouding in front of the cooling fan.
3. Disconnect the fan wiring.
4. Remove the four fastening screws.
5. Pull the fan housing outwards.
6. Install a new fan in reverse order.

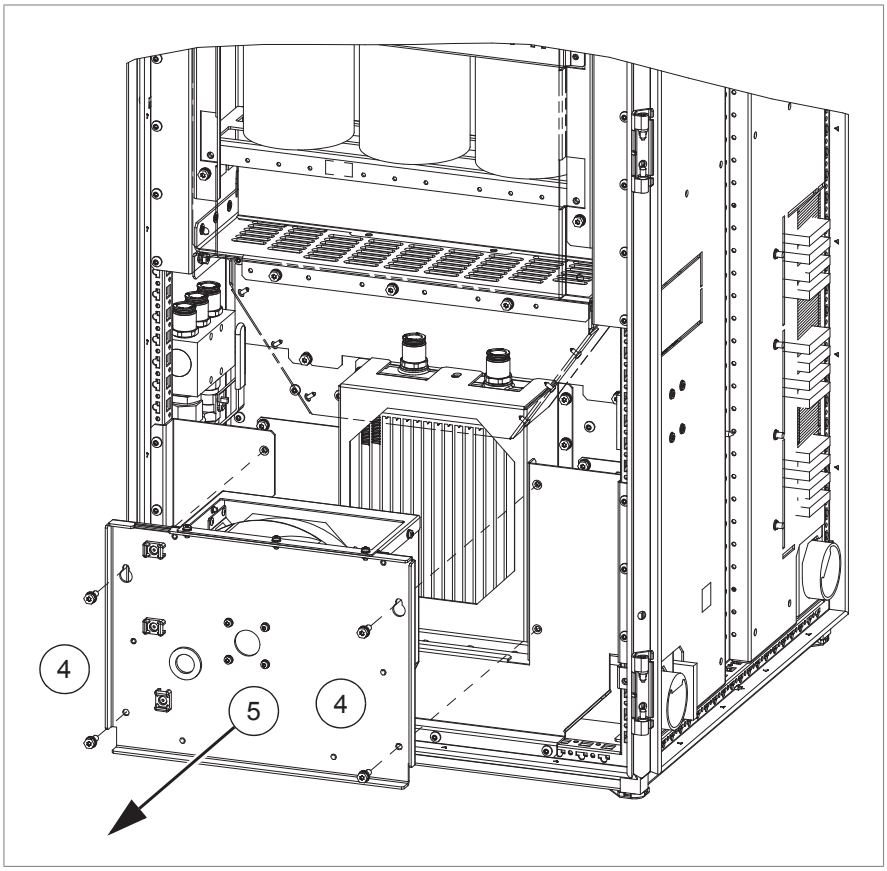

IGBT supply module

Replacing the IGBT supply module (frame R7i)

WARNING!
Obey the safety instructions given in ACS880 liquid-cooled multidrives cabinets and modules safety instructions (3AXD50000048633 [English]). If you ignore the safety instructions, injury or death, or damage to the equipment can occur.

If you are not a qualified electrical professional, do not do installation or maintenance work.

WARNING!
Make sure that the replacement module has exactly the same type code as the old module.

WARNING!
Stop the pumps and drain the coolant before you do work on the liquid cooling system. There is high-pressure hot coolant (6 bar, max. 50 °C) in the cooling circuit when it is in operation.

WARNING!
Use the required personal protective equipment. Wear protective gloves and long sleeves. Some parts have sharp edges.

Removing the module

1. Do the steps in section Electrical safety precautions (page 142).
2. Remove the shrouding in front of the module (if any).
3. Disconnect the wiring from the module and move it aside. Use cable ties to keep the wiring out of the way.
4. Close the inlet valve and outlet valve (located on the right-hand side of the cubicle). Lead the drain hoses (on both sides of the cubicle) into a suitable container. Open the drain valves (on both sides of the cubicle).
5. After the module has drained, disconnect the piping from the module.
6. Pull the module carefully out onto a suitable platform. Keep the module secured to a hoist or equivalent to prevent the module from falling. For information on using the lifting device, see Converter module lifting device for drive cabinets hardware manual (3AXD50000210268 [English]).

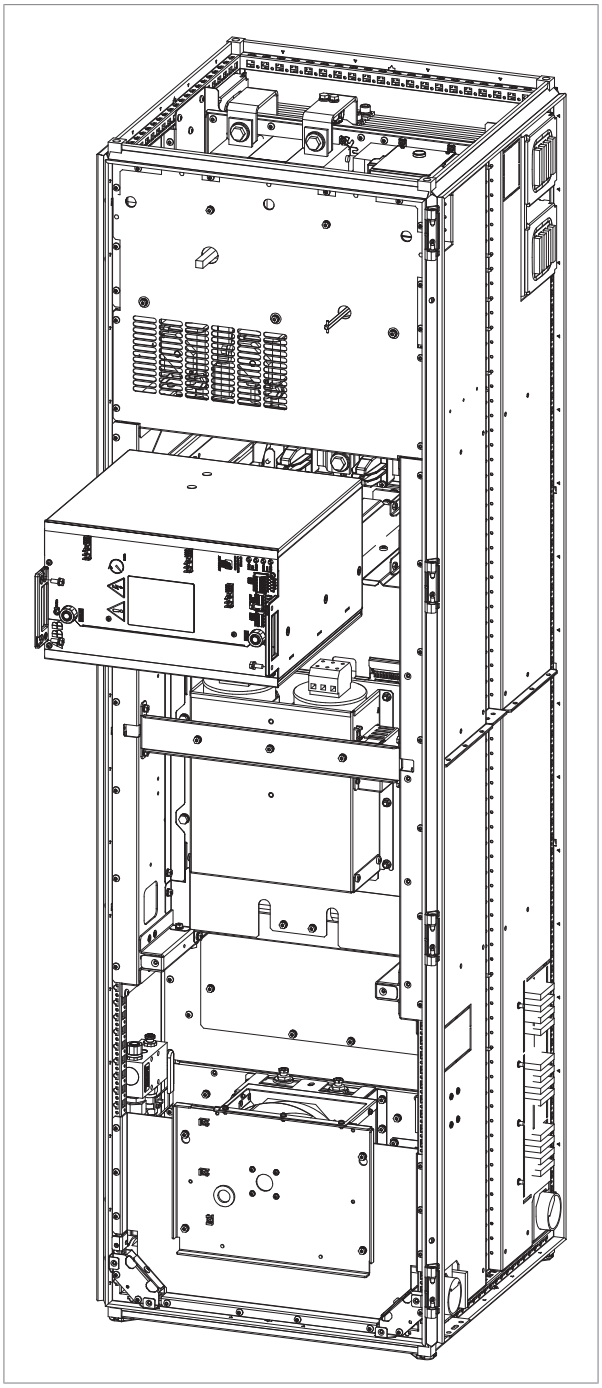

Reinstalling the module

1. Push the module carefully into its bay.
2. Tighten the locking screw (6 mm hex key) at the top of the module to 5 N·m [3.6 lbf·ft] maximum.
3. Fasten the module retaining screws at the top and the bottom of the module (two screws each).
4. Reconnect the coolant pipes to the module. Tighten to 20 N·m (14.75 lbf·ft).
5. Reconnect the control wiring to the module.
6. Fill up the cooling system. For instructions, see section Filling up and bleeding the internal cooling circuit.

Replacing the IGBT supply module (frame R8i)

WARNING!
Obey the safety instructions given in ACS880 liquid-cooled multidrives cabinets and modules safety instructions (3AXD50000048633 [English]). If you ignore the safety instructions, injury or death, or damage to the equipment can occur.

If you are not a qualified electrical professional, do not do installation or maintenance work.

WARNING!
Make sure that the replacement module has exactly the same type code as the old module.

WARNING!
Stop the pumps and drain the coolant before you do work on the liquid cooling system. There is high-pressure hot coolant (6 bar, max. 50 °C) in the cooling circuit when it is in operation.

WARNING!
Use the required personal protective equipment. Wear protective gloves and long sleeves. Some parts have sharp edges.

Assembling the service platform

The service platform is included in the cabinet delivery. It can be used when installing or servicing liquid-cooled R8i modules.

1. Fasten the triangular supports to the cabinet frame (5 × M6 screws for each support). Make sure that the guide pins are properly inserted in the holes of the frame. Tighten the screws to torque (max 5.5 N·m / 4 lb·ft).
2. Select the braces (4 pcs) according to the width of the cubicle and attach them to the supports.
3. Attach the support feet to the platform and adjust them to the correct height.
4. Attach the slide plate. Put the hooks (a) at the back of the slide plate through the holes in the cabinet frame. Align the slots (b) in the slide plate with the braces.
5. Fix the slide plate into place with the index screws (c) at the bottom of the slide plate.

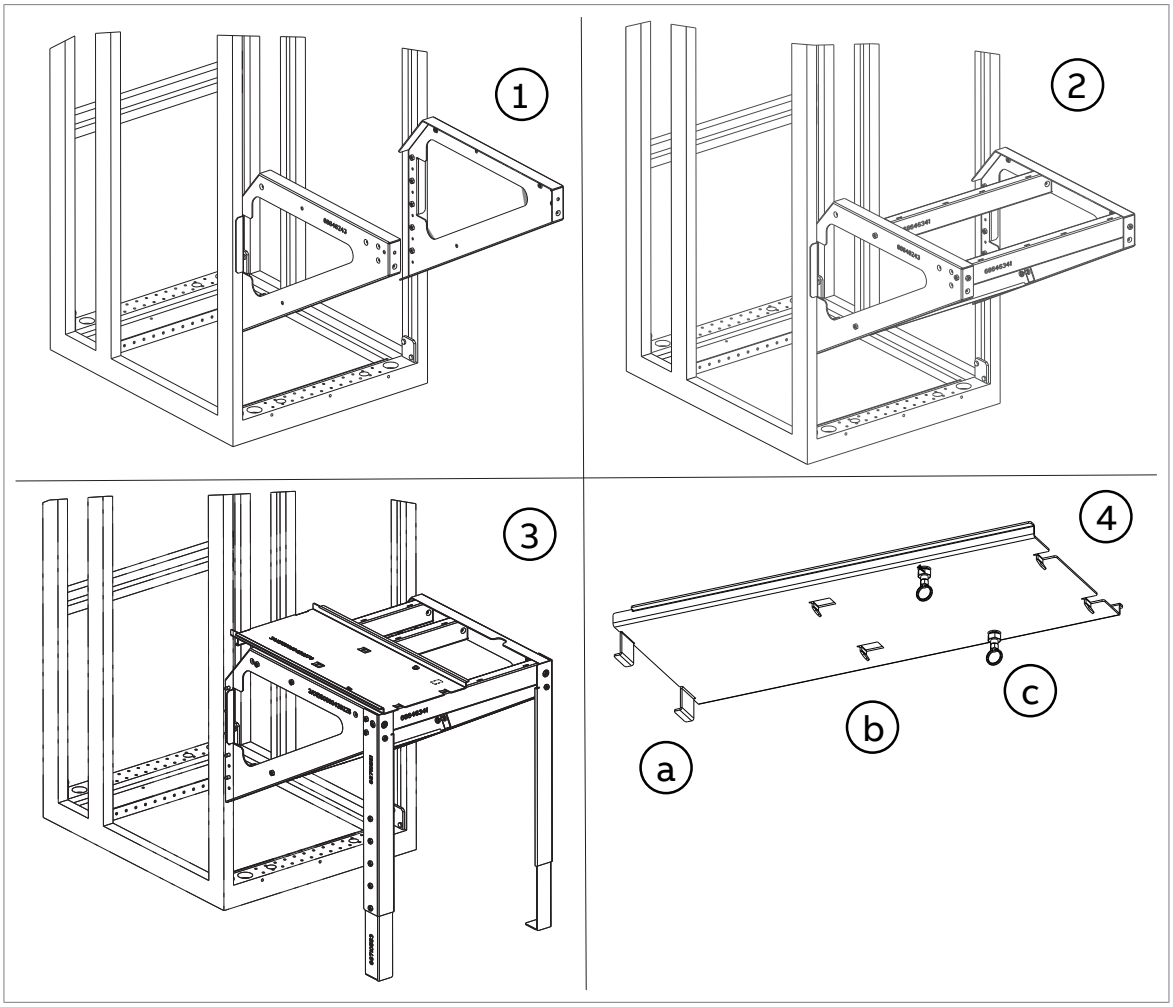

Removing the module

1. Do the steps in section Electrical safety precautions (page 142).
2. Remove the shrouding in front of the module.
3. Remove the locking screws of the swing-out frame (if present) and open it.
4. Disconnect the wiring from the module and move it aside. Use cable ties to keep the wiring out of the way.
5. Remove the L-shaped DC busbars at the top of the module. Make note of the orientation of the screws as well as the order of the washers.

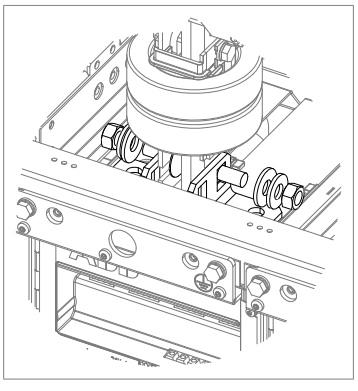

6. Close the inlet valve (a) and outlet valve (located on the right-hand side of the cubicle). Lead the drain hoses (b, on both sides of the cubicle) into a suitable container. Open the drain valves (c, on both sides of the cubicle). This will drain all modules in the cubicle.

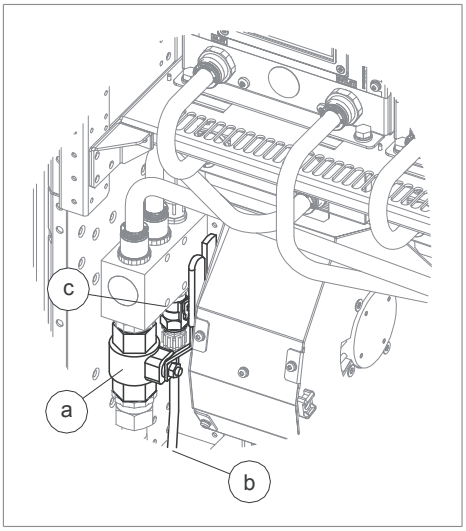

7. After the module has drained, disconnect the piping from the module.

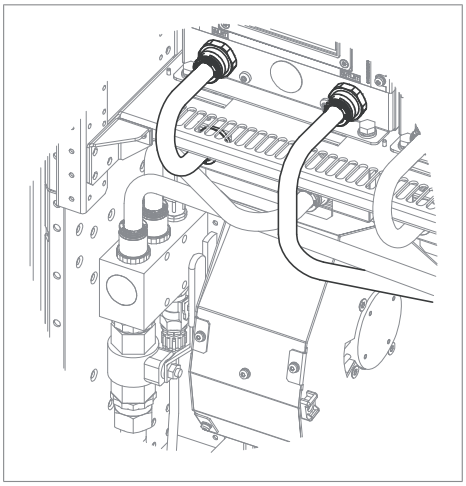

8. Remove the module retaining screws at the top and the bottom of the module.

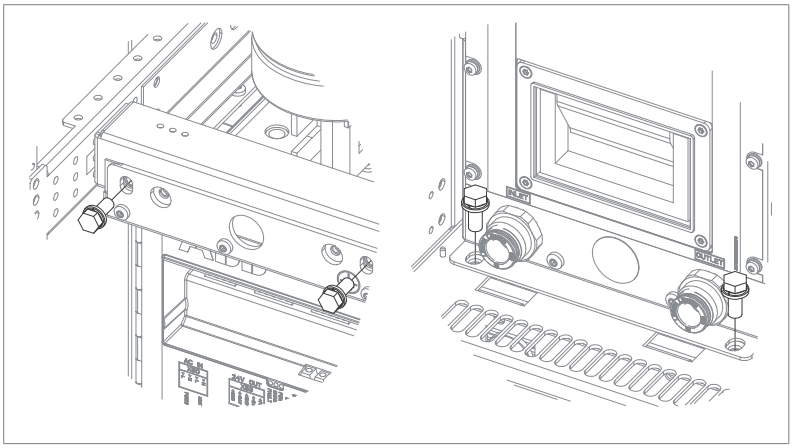

9. Pull the module carefully out onto a suitable platform. Keep the module secured to a hoist or equivalent to prevent the module from falling. For information on using the lifting device, see Converter module lifting device for drive cabinets hardware manual (3AXD50000210268 [English]).

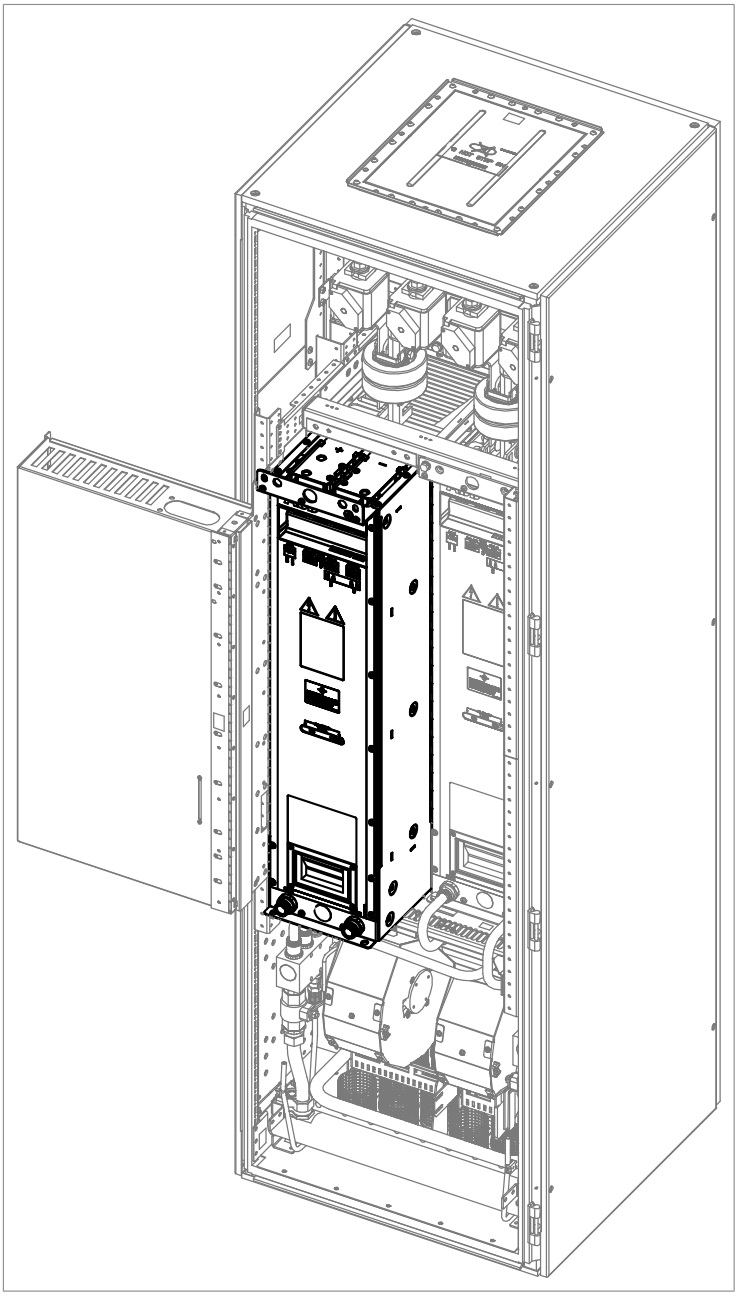

Reinstalling the module

1. Push the module carefully into its bay.
2. Fasten the retaining screws at the top and the bottom of the module.
3. Reinstall the DC busbars at the top of the module.
4. Reconnect the coolant pipes to the module. Tighten to specified torque. R8i module coolant connections: 15 N·m (11.1 lbf·ft). Other connections: 20 N·m (14.75 lbf·ft).
5. Reconnect the control wiring to the module.

6. Fill up the cooling system. For instructions, see section Filling up and bleeding the internal cooling circuit.
7. Close the swing-out frame (if present). Reinstall all shrouds removed earlier.

Capacitors

The intermediate DC circuit of the drive contains several electrolytic capacitors. Operating time, load, and surrounding air temperature have an effect on the life of the capacitors. Capacitor life can be extended by decreasing the surrounding air temperature.

Capacitor failure is usually followed by damage to the unit and an input cable fuse failure, or a fault trip. If you think that any capacitors in the drive have failed, contact ABB.

Reforming the capacitors

The capacitors must be reformed if the drive has not been powered (either in storage or unused) for a year or more. The manufacturing date is on the type designation label. For information on reforming the capacitors, refer to Capacitor reforming instructions (3BFE64059629 [English]).

Replacing the capacitors of the LCL filter (frame R7i)

WARNING!
Read the safety instructions given in ACS880 liquid-cooled multidrives cabinets and modules safety instructions (3AXD50000048633 [English]). If you ignore them, injury or death, or damage to the equipment can occur.

WARNING!
Wear protective gloves and long sleeves. Some parts have sharp edges.

1. Repeat the steps described in section Electrical safety precautions (page 142) before you start the work.
2. Remove the shrouding (if any).
3. Remove the busbar in front of the capacitor unit.
4. Disconnect the wiring of the capacitors.
5. Remove the fastening screws of the capacitor unit and slide the capacitor unit out.
6. Install a new capacitor unit in reverse order.
7. Close the door.

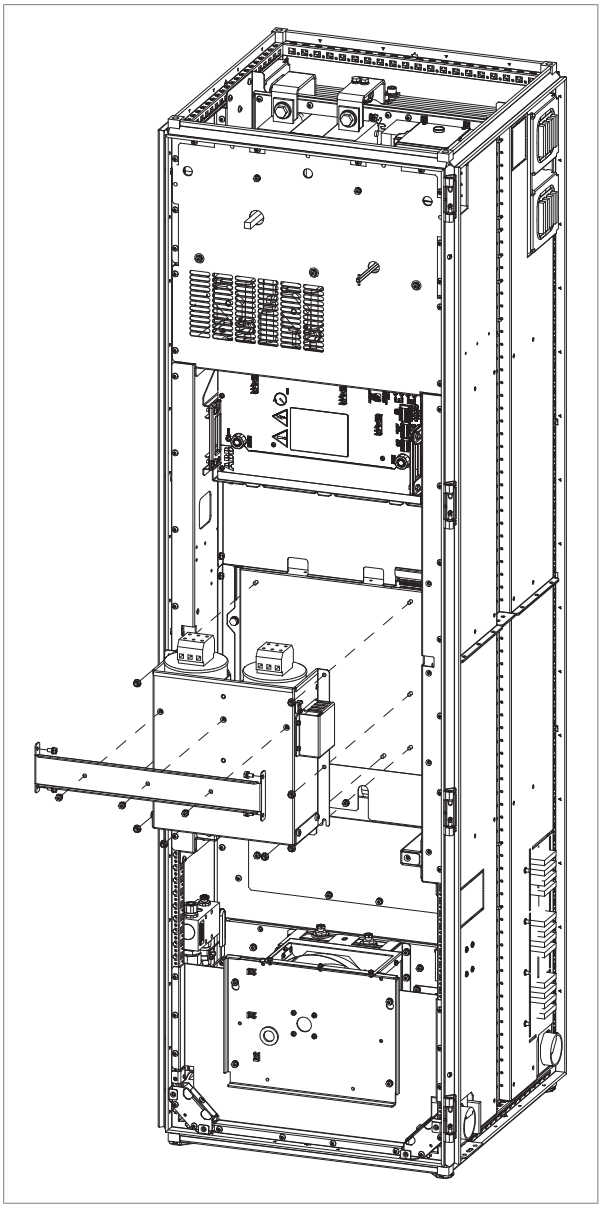

Replacing the DC fuses (frame R7i)

WARNING!
Obey the safety instructions of the drive. If you ignore them, injury or death, or damage to the equipment can occur.

WARNING!
Use the required personal protective equipment. Wear protective gloves and long sleeves. Some parts have sharp edges.

1. Stop the drive and do the steps in section Electrical safety precautions (page 142) before you start the work.
2. Open the door of the module cubicle.
3. Remove the shrouding in front of the fuses (upper part of the cabinet).
4. Check the condition of the fuses. In case of a blown fuse, replace all fuses with similar fuses: slacken the nuts of the screws of the fuses, and slide out the fuse blocks. Do not unscrew the nuts completely, not to drop them inside the cubicle.
5. Make note of the order of the washers on the screws.
6. Remove the screws, nuts and washers from the old fuses and attach them to the new fuses. Make sure to keep the washers in the original order.
7. Insert the new fuses into their slots in the cubicle. Pre-tighten the nuts first by hand or by applying a torque of no more than 5 N·m (3.7 lbf·ft).
8. Tighten the nuts to torque as follows:
   - Cooper-Bussmann fuses: 50 N·m (37 lbf·ft)
   - Mersen (Ferraz-Shawmut) fuses: 46 N·m (34 lbf·ft)
   - Other: Refer to the fuse manufacturer’s instructions.
9. Attach the shrouding and close the door.

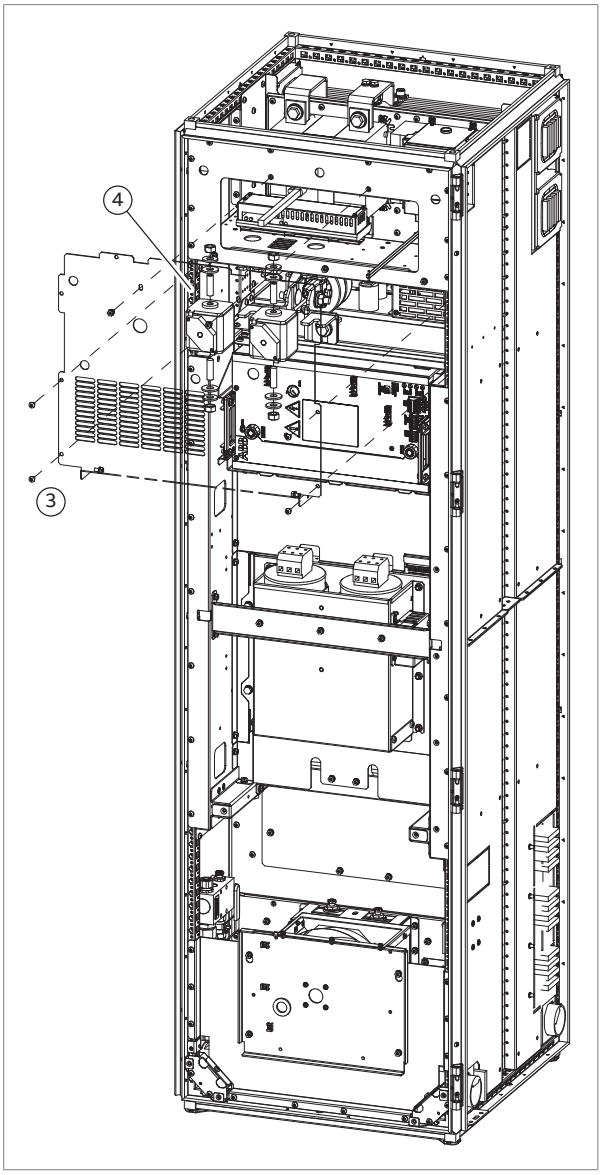

Control panel

Refer to ACS-AP-I, -S, -W and ACH-AP-H, -W Assistant control panels user’s manual (3AUA0000085685 [English]).

BCU control unit

Replacing the memory unit

After replacing a control unit, you can keep the existing parameter settings by transferring the memory unit from the defective control unit to the new control unit.

WARNING!
Obey the safety instructions given in ACS880 liquid-cooled multidrives cabinets and modules safety instructions (3AXD50000048633 [English]). If you ignore the safety instructions, injury or death, or damage to the equipment can occur.

If you are not a qualified electrical professional, do not do installation or maintenance work.

WARNING!
Do not remove or insert the memory unit when the control unit is powered.

1. Stop the drive and do the steps in section Electrical safety precautions (page 142) before you start the work.
2. Make sure that the control unit is not powered.
3. Remove the fastening screw and pull the memory unit out.
4. Install a memory unit in reverse order.

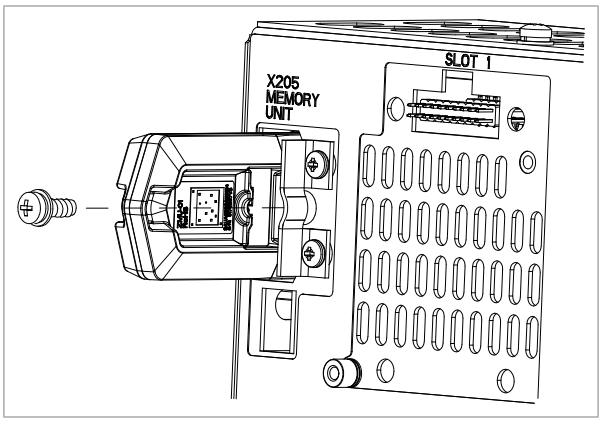

Replacing the BCU control unit battery

WARNING!
Obey the safety instructions given in ACS880 liquid-cooled multidrives cabinets and modules safety instructions (3AXD50000048633 [English]). If you ignore the safety instructions, injury or death, or damage to the equipment can occur.

If you are not a qualified electrical professional, do not do installation or maintenance work.

Replace the real-time clock battery if the BATT OK LED is not illuminated when the control unit is powered.

1. Stop the drive and do the steps in section Electrical safety precautions (page 142) before you start the work.
2. Undo the fastening screw and remove the battery.
3. Replace the battery with a new BR2032 battery.
4. Dispose of the old battery according to local disposal rules or applicable laws.
5. Set the real-time clock.

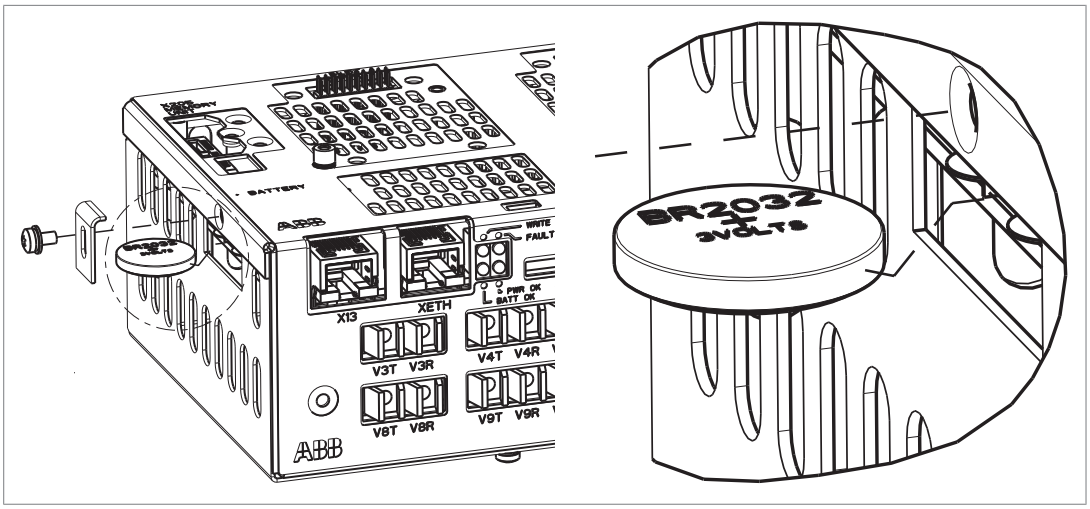

UCU control unit

Replacing the memory unit (UCU-22...24)

WARNING!
Obey the safety instructions of the drive. If you ignore them, injury or death, or damage to the equipment can occur. If you are not a qualified electrical professional, do not do installation, commissioning or maintenance work.

After replacing a control unit, you can keep the existing parameter settings by transferring the memory unit from the defective control unit to the new control unit.

WARNING!
Do not remove or install the memory unit when the control unit is powered.

1. Stop the drive and do the steps in section Electrical safety precautions (page 142) before you start the work.
2. Make sure that the control unit is not powered.
3. Push and hold in the clips on the memory unit. Pull the memory unit out.
4. Push the new memory unit in.

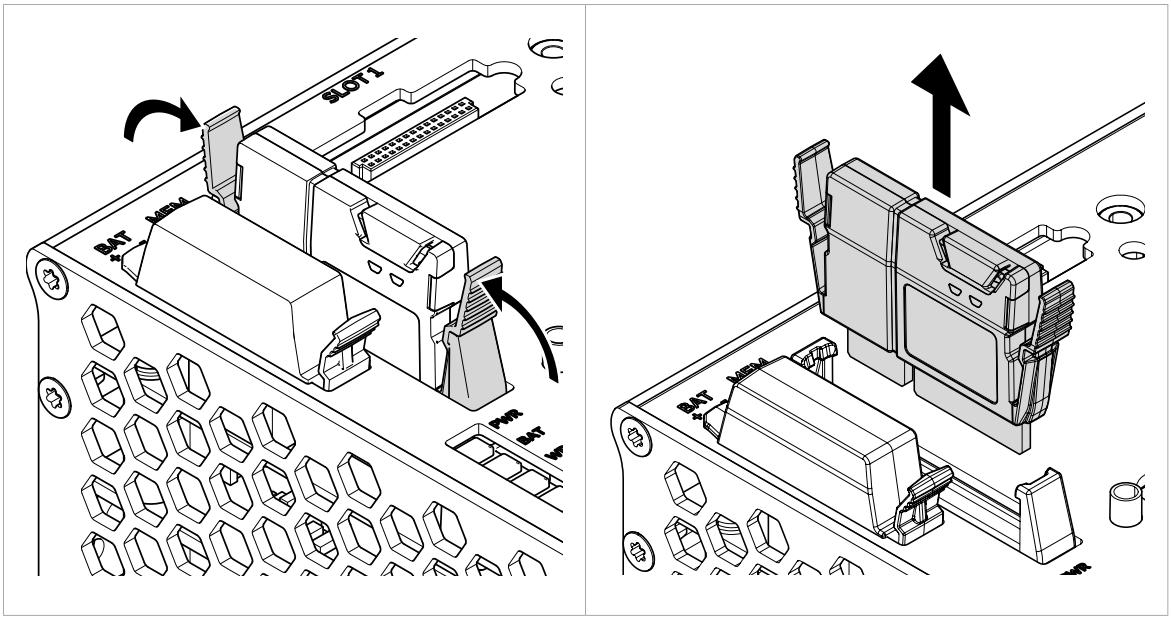

Replacing the UCU control unit battery

WARNING!
Obey the safety instructions of the drive. If you ignore them, injury or death, or damage to the equipment can occur. If you are not a qualified electrical professional, do not do installation, commissioning or maintenance work.

Replace the real-time clock battery if the BAT LED is off when the control unit is powered.

1. Stop the drive and do the steps in section Electrical safety precautions (page 142) before you start the work.
2. Open the battery cover.
3. Replace the battery with a new BR2032 battery.

   Note: The real-time clock stays set for 2 minutes without battery.
4. Close the battery cover.
5. Set the real-time clock if necessary.
6. Dispose of the old battery according to local disposal rules or applicable laws.

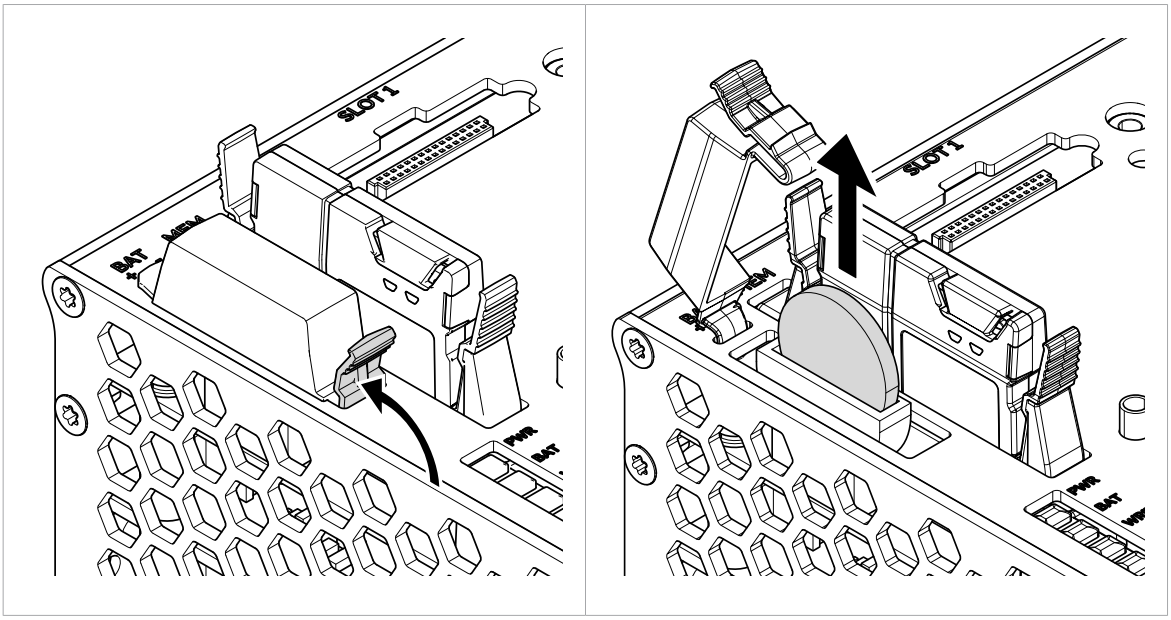

LEDs and other status indicators

Warnings and faults reported by the control program are displayed on the control panel or in the Drive composer PC tool. For further information, see the firmware manual delivered with the IGBT supply module.

Control panel and panel platform/holder LEDs

The ACS-AP-… control panel has a status LED. The control panel mounting platform or holder has two status LEDs. For their indications, see the following table.

Location	LED	Indication
Control panel	Continuous green	The unit is functioning normally.
	Flickering green	Data is transferred between the PC and the unit through the USB connection of the control panel.
	Flashing green	There is an active warning in the unit.
	Continuous red	There is an active fault in the unit.
	Flashing red	There is a fault that requires the stopping and restarting of the drive/converter/inverter.
	Flashing blue (ACS-AP-W only)	The Bluetooth interface is enabled, in discoverable mode, and ready for pairing.
	Flickering blue (ACS-AP-W only)	Data is being transferred through the Bluetooth interface of the control panel.
Control panel mounting platform or holder (with the control panel removed)	Red	There is an active fault in the unit.
	Green	Power supply for the control unit is OK.

R7i and R8i module LEDs

See chapter Operation principle and hardware description.

Reduced run

A “reduced run” function is available for supply/rectifier units consisting of parallel-connected modules. The function makes it possible to continue operation with limited current even if one (or more) module is out of service, for example, because of maintenance work.

In principle, reduced run is possible with only one module, but the physical requirements of operating the motor still apply; for example, the modules remaining in use must be able to provide enough current. For allowed configurations when using reduced run function, refer to the firmware manual of the supply unit.

Starting reduced run operation

WARNING!
Obey the safety instructions given in ACS880 liquid-cooled multidrives cabinets and modules safety instructions (3AXD50000048633 [English]). If you ignore the safety instructions, injury or death, or damage to the equipment can occur.

If you are not a qualified electrical professional, do not do installation or maintenance work.

WARNING!
Use the required personal protective equipment. Wear protective gloves and long sleeves. Some parts have sharp edges.

1. Stop the drive and do the steps in section Electrical safety precautions (page 142) before you start the work.
2. If the control unit is powered from the faulty module, connect the control unit to another 24 V DC power supply. ABB strongly recommends using an external power supply with supply/rectifier units consisting of parallel-connected modules.
3. Remove the module to be serviced from its bay.
4. Install an air baffle (for example, plexiglass) to the top module guide to block the airflow through the empty module bay.
5. Switch on the power to the supply/rectifier unit.
6. Enter the number of supply/rectifier modules present into parameter 195.13 Reduced run mode.
7. Reset all faults and start the supply/rectifier unit. The maximum current limit is now automatically set according to the new configuration. A mismatch between the number of detected modules (parameter 195.14) and the value set in 195.13 will generate a fault.

Resuming normal operation

WARNING!
Obey the safety instructions given in ACS880 liquid-cooled multidrives cabinets and modules safety instructions (3AXD50000048633 [English]). If you ignore the safety instructions, injury or death, or damage to the equipment can occur.

If you are not a qualified electrical professional, do not do installation or maintenance work.

1. Stop the drive and do the steps in section Electrical safety precautions (page 142) before you start the work.
2. Remove the air baffle from the module bay.
3. Reinstall the module into its bay.
4. Switch on the power to the supply/rectifier unit.
5. Enter "0" into parameter 195.13 Reduced run mode.

Functional safety components

The mission time of functional safety components is 20 years which equals the time during which failure rates of electronic components remain constant. This applies to the components of the standard Safe torque off circuit as well as any modules, relays and, typically, any other components that are part of functional safety circuits.

The expiry of mission time terminates the certification and SIL/PL classification of the safety function. The following options exist:

- Renewal of the whole drive and all optional functional safety module(s) and components.
- Renewal of the components in the safety function circuit. In practice, this is economical only with larger drives that have replaceable circuit boards and other components such as relays.

Note that some of the components may already have been renewed earlier, restarting their mission time. The remaining mission time of the whole circuit is however determined by its oldest component.

Contact your local ABB service representative for more information.

10

Ordering information

Contents of this chapter

This chapter lists the types and ordering codes of the unit components.

You can find the kit-specific assembly drawings, step-by-step instructions and detailed kit information on the Internet. Go to https://sites-apps.abb.com/sites/lvacdrivesengineeringsupport/content. If necessary, contact your local ABB representative.

Note:

- This chapter only lists the installation accessories available from ABB. All other parts must be sourced from a third party (such as Rittal) by the system integrator. For a listing, refer to the kit-specific installation instructions available at https://sites-apps.abb.com/sites/lvacdrivesengineeringsupport/content. For access, contact your local ABB representative.
- Parts that are labeled suitable for generic enclosures are not designed for any specific enclosure system. These parts are intended as a basis for further engineering, and may require additional parts to be fully usable.
  Installation accessories designed for generic enclosures are in fact designed for an inside width of 50 mm less than the nominal width of the enclosure. For example, a mechanical kit intended for 800 mm wide generic enclosure is designed for an inside width of 750 mm, and will not fit a 800 mm wide Rittal VX25 enclosure.

Kit code key

The kit codes shown in this chapter break down as follows.

The format of the kit code is x-w-s-yyy(-VX), for example, L-6-8-401 where:

- x = cooling method
  - A = air-cooled (some of these kits are also used with liquid-cooled drives)
  - L = liquid-cooled
- w = cabinet width
  - 4 = 400 mm
  - 6 = 600 mm
  - 8 = 800 mm
- s = module frame size / sizes
  - 1 = R1i
  - 2 = R2i
  - 3 = R3i
  - 4 = R4i
  - 5 = R5i
  - 6 = R6i/D6D
  - 7 = R7i/D7D/D7T
  - 8 = R8i/D8D/D8T
  - X = any, or not defined.
- yyy = consecutive numbering
  - 001…099 = Kits related to cabinets, for example, adapter plates

001…019	Common AC- and DC-related kits
020…049	Cabinet mechanics kits
050…059	Swing frame kits

  - 100…199 = Kits related to AC connection, for example, busbars

100…129	Kits with connection to AC
130…149	Kits with connection to module
150…199	Other kits related to AC connection

  - 200…299 = Kits related to DC connection, for example, busbars

200…229	Kits with connection to common DC
230…249	Kits with connection to module
250…299	Other kits related to DC connection

- 300…399 = Kits related to module installation, for example, mechanical supports

300…330	Module supporting kits, basic mechanical support
350…379	Shroud kits

- 400…499 = Other kits

400…419	Fan kits
420…439	Air guides
440…459	Cooling circuit kits

- VX = Kit specifically designed for the Rittal VX25 enclosure system. Many kits without this designation are also used with the VX25 system.

Frame R7i and multiples

IGBT supply modules

IGBT supply units consisting of frame R7i IGBT supply module are to be ordered as separate modules.

IGBT supply unit		Modules used	
Type	**Frame size**	**Qty**	**Ordering code (for options see below)**
U_N = 400 V			
ACS880-204LC-0270A-3	1×R7i	1	ACS880-104LC-0300A-3
ACS880-204LC-0340A-3	1×R7i	1	ACS880-104LC-0380A-3
ACS880-204LC-0420A-3	1×R7i	1	ACS880-104LC-0470A-3
ACS880-204LC-0530A-3	2×R7i	2	ACS880-104LC-0300A-3+E205
ACS880-204LC-0670A-3	2×R7i	2	ACS880-104LC-0380A-3+E205
ACS880-204LC-0770A-3	2×R7i	2	ACS880-104LC-0470A-3+E205
ACS880-204LC-1000A-3	3×R7i	3	ACS880-104LC-0380A-3+E205
ACS880-204LC-1180A-3	3×R7i	3	ACS880-104LC-0470A-3+E205
ACS880-204LC-1310A-3	4×R7i	4	ACS880-104LC-0380A-3+E205
ACS880-204LC-1500A-3	4×R7i	4	ACS880-104LC-0470A-3+E205
U_N = 500 V			
ACS880-204LC-0270A-5	1×R7i	1	ACS880-104LC-0300A-5
ACS880-204LC-0340A-5	1×R7i	1	ACS880-104LC-0380A-5
ACS880-204LC-0410A-5	1×R7i	1	ACS880-104LC-0460A-5
ACS880-204LC-0530A-5	2×R7i	2	ACS880-104LC-0300A-5+E205
ACS880-204LC-0670A-5	2×R7i	2	ACS880-104LC-0380A-5+E205
ACS880-204LC-0770A-5	2×R7i	2	ACS880-104LC-0460A-5+E205
ACS880-204LC-1000A-5	3×R7i	3	ACS880-104LC-0380A-5+E205
ACS880-204LC-1180A-5	3×R7i	3	ACS880-104LC-0460A-5+E205
ACS880-204LC-1310A-5	4×R7i	4	ACS880-104LC-0380A-5+E205
ACS880-204LC-1500A-5	4×R7i	4	ACS880-104LC-0460A-5+E205
U_N = 690 V			
ACS880-204LC-0260A-7	R7i	1	ACS880-104LC-0290A-7
ACS880-204LC-0310A-7	R7i	1	ACS880-104LC-0340A-7
ACS880-204LC-0350A-7	R7i	1	ACS880-104LC-0389A-7
The units below consist of multiple R7i modules connected in parallel. The power ratings of these units overlap the ratings of units built out of frame R8i modules. R8i modules are likely to be suitable for most applications, but these units can be considered instead if vertical space is limited, for example.			
ACS880-204LC-0500A-7	2×R7i	2	ACS880-104LC-0290A-7+E205
ACS880-204LC-0590A-7	2×R7i	2	ACS880-104LC-0340A-7+E205
ACS880-204LC-0680A-7	2×R7i	2	ACS880-104LC-0389A-7+E205
ACS880-204LC-0760A-7	3×R7i	3	ACS880-104LC-0290A-7+E205
ACS880-204LC-0880A-7	3×R7i	3	ACS880-104LC-0340A-7+E205
ACS880-204LC-1020A-7	3×R7i	3	ACS880-104LC-0389A-7+E205
ACS880-204LC-1170A-7	4×R7i	4	ACS880-104LC-0340A-7+E205

IGBT supply unit		Modules used	
Type	**Frame size**	**Qty**	**Ordering code (for options see below)**
ACS880-204LC-1340A-7	4×R7i	4	ACS880-104LC-0389A-7+E205

Ordering code format	Option codes
[Module type] +code [+code] … For example, **ACS880-104LC-0340A-7**	2×R7i…4×R7i: **+E205**: Internal du/dt filtering

Note: The following components are also required to construct a working IGBT supply unit and must be ordered separately:

- LCL filter
- An ACS-AP-x control panel is required for the commissioning of an ACS880 drive system, even if the Drive composer PC tool is used.
- Control unit
- Common mode filters
- Quick connector
- Fiber optic cabling from control unit to each IGBT supply module.

The other parts listed in this chapter for this frame size

- may be required by the application, or
- make the installation or use of the module easier.

LCL filters

LCL filter delivery contains LCL filter components as loose parts. LCL filter contains the grid-side choke, converter-side choke, capacitors and resistor. For contents, see Kit contents of the LCL filters.

ACS880-204LC-...	LCL filter		
	LCL filter type	Qty	Ordering code
U_N = 400 V			
0270A-3	BLCL-14LC-5	1	3AXD50000896332
0340A-3			
0420A-3			
0530A-3	BLCL-15LC-7	1	3AXD50000234417
0670A-3			
0770A-3			
1000A-3	BLCL-24LC-7	1	3AXD50000234431
1180A-3			
1310A-3	BLCL-25LC-7	1	3AXD50000234448
1500A-3			
U_N = 500 V			
0270A-5	BLCL-14LC-5	1	3AXD50000896332
0340A-5			
0410A-5			
0530A-5	BLCL-15LC-7	1	3AXD50000234417
0670A-5			
0770A-5			
1000A-5	BLCL-24LC-7	1	3AXD50000234431
1180A-5			
1310A-5	BLCL-25LC-7	1	3AXD50000234448
1500A-5			
U_N = 690 V			
0260A-7	BLCL-13LC-7	1	3AXD50000896431
0310A-7			
0350A-7			
0500A-7	BLCL-15LC-7	1	3AXD50000234417
0590A-7			
0680A-7			
0760A-7			
0880A-7	BLCL-24LC-7	1	3AXD50000234431
1020A-7			
1170A-7			
1340A-7	BLCL-25LC-7	1	3AXD50000234448

Control panel

The control panel is not included with the module but must be ordered separately. One control panel is required for the commissioning of an ACS880 drive system, even if the Drive Composer PC tool is used.

The control panel can be flush mounted on the cabinet door with the help of a door mounting kit. For more information on the control panel, see ACS-AP-I, -S, -W and ACH-AP-H, -W Assistant control panels user's manual (3AUA0000085685 [English]).

Type	Description	Ordering code	Illustration
ACS-AP-W	Control panel with Bluetooth	3AXD50000025965	
DPMP-01	Door mounting kit (IP55)	3AUA0000108878	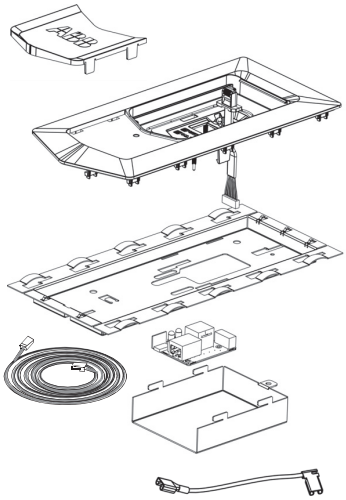
DPMP-02	Door mounting kit (IP65)	3AXD50000009374	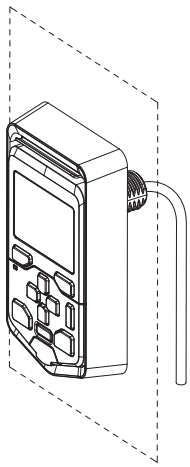

For more information on the door mounting kits, such as the contents of the kit, see the installation manuals:

- DPMP-01 mounting platform for control panels installation guide (3AUA0000100140 [English])
- DPMP-02/03 mounting platform for control panels installations guide (3AUA0000136205 [English]).

Control electronics

Control unit (BCU)

One BCU control unit is required per IGBT supply unit. The control unit is delivered with a memory unit containing the ACS880 IGBT supply control program.

IGBT supply module type	Control unit type	Ordering code
U_N = 690 V		
ACS880-204LC-0260A-7	BCU-02	3AXD50000002937
ACS880-204LC-0310A-7		
ACS880-204LC-0350A-7		
ACS880-204LC-0500A-7	BCU-02, if BAMU auxiliary measurement unit is not used BCU-12, if BAMU auxiliary measurement unit is used	3AXD50000002937 3AXD50000015806
ACS880-204LC-0590A-7		
ACS880-204LC-0680A-7		
ACS880-204LC-0760A-7	BCU-12	3AXD50000015806
ACS880-204LC-0880A-7		
ACS880-204LC-1020A-7		
ACS880-204LC-1170A-7		
ACS880-204LC-1340A-7		

IGBT supply module type	Control unit kit for optimal grid control (option +N8053)	Ordering code
U_N = 690 V		
ACS880-204LC-0260A-7	BCU N8053 kit 1×R7i OGC ISU	3AXD50000821310
ACS880-204LC-0310A-7		
ACS880-204LC-0350A-7		
ACS880-204LC-0500A-7	BCU N8053 kit 2×R7i OGC ISU	3AXD50000823253
ACS880-204LC-0590A-7		
ACS880-204LC-0680A-7		
ACS880-204LC-0760A-7	BCU N8053 kit 3×R7i OGC ISU	3AXD50000959969
ACS880-204LC-0880A-7		
ACS880-204LC-1020A-7		
ACS880-204LC-1170A-7	BCU N8053 kit 4×R7i OGC ISU	3AXD50000959976
ACS880-204LC-1340A-7		

Note: Fiber optic communication with another control unit (such as that of the inverter unit) requires an RDCO-0x DDCS communication module. For more information, see RDCO-0x DDCS communication option modules user's manual (3AFE64492209 [English]).

For more information on optional modules, see appropriate option module manual.

Control unit (UCU)

One UCU control unit is required per IGBT supply unit. The control unit is delivered with a memory unit containing the ACS880 IGBT supply control program.

IGBT supply module type	Control unit type	Ordering code
U_N = 400 V		
ACS880-204LC-0270A-3	UCU-22	ACS880UCU-204-22-0
ACS880-204LC-0340A-3		
ACS880-204LC-0420A-3		
ACS880-204LC-0530A-3	UCU-22, if BAMU auxiliary measurement unit is not used UCU-23, if BAMU auxiliary measurement unit is used	ACS880UCU-204-22-0 ACS880UCU-204-23-0
ACS880-204LC-0670A-3		
ACS880-204LC-0770A-3		
ACS880-204LC-1000A-3	UCU-23	ACS880UCU-204-23-0
ACS880-204LC-1180A-3		
ACS880-204LC-1310A-3		
ACS880-204LC-1500A-3		
U_N = 500 V		
ACS880-204LC-0270A-5	UCU-22	ACS880UCU-204-22-0
ACS880-204LC-0340A-5		
ACS880-204LC-0410A-5		
ACS880-204LC-0530A-5	UCU-22, if BAMU auxiliary measurement unit is not used UCU-23, if BAMU auxiliary measurement unit is used	ACS880UCU-204-22-0 ACS880UCU-204-23-0
ACS880-204LC-0670A-5		
ACS880-204LC-0770A-5		
ACS880-204LC-1000A-5	UCU-23	ACS880UCU-204-23-0
ACS880-204LC-1180A-5		
ACS880-204LC-1310A-5		
ACS880-204LC-1500A-5		

Ordering code format	Option codes
[Control unit type] + code [+code]… For example, ACS880UCU-204-22-0+N8010	**+N8010:** Application programming **+N8053:** Optimal grid control

The UCU control unit kit contains:

- UCU control unit with USCA-02 adapters.
- UMU-01 memory unit with the control program.

The following option module is to be installed on the control unit and must be ordered separately:

- RDCO-04C DDCS communication option module (ordering code: 3AXD50000868056).

Fiber optic cables

Each frame R7i module is connected to the control unit with a pair of fiber optic cables.

The following kits, each consisting of a pair of plastic fiber optic cables, are available from ABB:

Length	Kit type designation	Ordering code
2 m (6.6 ft)	NLWC-02	58988821
3 m (9.8 ft)	NLWC-03	58948233
5 m (16.4 ft)	NLWC-05	58948250
7 m (23 ft)	NLWC-07	58948268
10 m (32.8 ft)	NLWC-10	58948276

Auxiliary measurement unit (BAMU)

The BAMU is a measurement unit for precise voltage and current measurements. It is highly recommended for use with a weak network, and mandatory when used in a grid converter (i.e. when the optional optimal grid control functionality is used).

Frame size	Unit type	Ordering code
All	BAMU-12C	3AXD50000045879

For more information, see

- section Weak supply networks (page 41)
- Optimal grid control (option +N8053) for ACS880 multidrives (3AXD50000220717 [English])
- BAMU-12C auxiliary measurement unit hardware manual (3AXD50000117840 [English]).

Note: You must have adequate amount of fiber optic connections in the control unit if you use a BAMU auxiliary measurement unit with parallel-connected IGBT supply modules.

CIO-01 I/O module

CIO-01 I/O module for distributed I/O bus control is not included in the module delivery, but can be ordered separately. The distributed I/O bus controls and supervises each cabinet fan separately. It indicates malfunctioning fans by warning or fault messages. One CIO-01 can monitor and control up to 4 cabinet fans.

For more information, see CIO-01 I/O module and distributed I/O bus user's manual (3AXD50000126880 [English]).

Type	Data	Qty	Ordering code
CIO-01	CIO-01 I/O module for distributed I/O bus control	1	3AXD50000041983

Mechanical installation accessories

These kits include parts that are used for installing the module and the LCL filter in the enclosure.

Module, LCL filter, and electronics mounting parts

These parts attach to the VX25 enclosure frame and act as a mounting base for the module installation frame, the control unit, and other components.

Used with...	Qty	Ordering code	Kit code	Illustration
400/600/800 mm VX25 enclosure	1	3AXD50000360543	L-468-8-020-VX	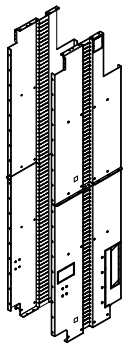 Instruction code: 3AXD50000327591
BLCL-14LC-5 (600 mm Rittal VX25 enclosure) BLCL-13LC-7 (600 mm Rittal VX25 enclosure)	1	3AXD50001013523	L-6-7-037-VX	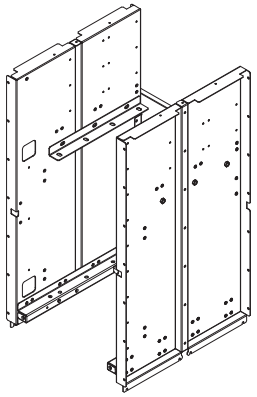 Instruction code: 3AXD50001012816

Module installation frame

The module can easily be inserted into (and extracted from) the installation frame. The frame has quick connectors at the back for the AC and DC power connections.

You can install the module in upright position (kit L-468-7-320) or on its side (kit L-6-7-038-VX). The latter can especially be used with LCL filter of type BLCL-13LC-7. AC power connection is on bottom part of the frame, and DC power connection is on top part of the frame.

For details of the module installation frames, see the dimension drawings.

Used with...	Qty	Ordering code	Kit code	Illustration
1×R7i	1 per module	3AXD50001013547	L-6-7-038-VX	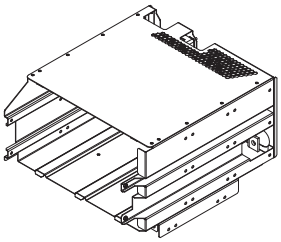 Instruction code:
2×R7i…4×R7i	1 per module	3AXD50000836444	L-468-7-320	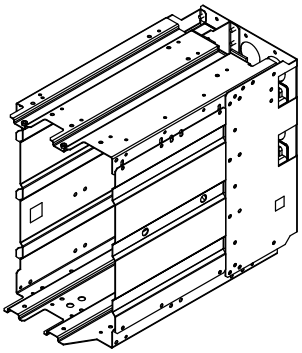 Instruction code: 3AXD50000837915

Marine support kit

This kit contains parts that can be used for reinforcing the cabinet structure for installation sites with vibration, for example in marine applications.

Used with...	Qty	Ordering code	Kit code	Illustration
600 mm VX25 enclosure with 1 module	1	3AXD50001013646	L-6-7-504-VX	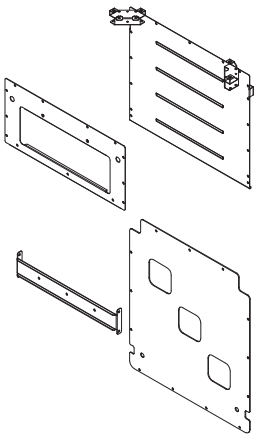 Instruction code: 3AXD50001062552

Shrouding and air guide

This kit contains the shrouds and the air guide, as well as the necessary brackets and screws, to cover the top and bottom parts of the cubicle.

Used with...	Qty	Ordering code	Kit code	Illustration
600 mm Rittal VX25 enclosure	1	3AXD50001013653	L-6-7-353-VX	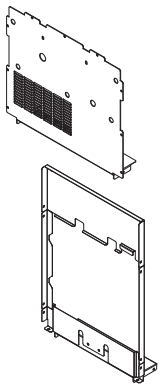 Instruction code: 3AXD50001062668

Pressure relief kit

The explosion exhaust plate acts as a pressure relief vent in case of arcing inside the cubicle. This part is installed on the roof of the cabinet.

Used with ...	Qty	Ordering code	Kit code	Illustration
VX25 enclosure	1 per cubicle	3AXD50000667277	L-68-X-461-VX	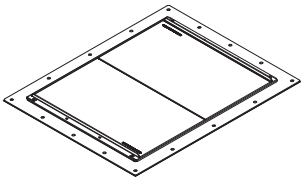 Instruction code:

Lifting device

Use the lifting device when replacing a module in the Rittal VX25 enclosure.

Frame	Enclosure	Qty	Ordering code	Illustration
R7i, R8i	Rittal VX25	1	3AXD50000439997	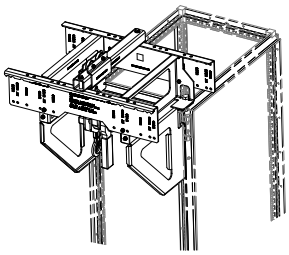 Instruction code: 3AXD50000210268, 3AXD50000439409

AC-side components

Main switch kit

You must equip the electric supply of a machinery with a main disconnecting device (IEC/EN60204-1). The main power line is equipped with a main a main switch [Q1]. Frames 2×R7i…4×R7i have main circuit breaker instead of switch and contactor. This section lists suitable main switches.

IGBT supply unit	Main switches (230 V / 115 V, IEC)		
Type	Type	Ordering code	Qty
U_N = 400 V			
ACS880-204LC-0270A-3	OT1000E12	3AXD50001056292	1
ACS880-204LC-0340A-3	OT1000E12	3AXD50001056292	1
ACS880-204LC-0410A-3	OT1000E12	3AXD50001056292	1
U_N = 500 V			
ACS880-204LC-0270A-5	OT1000E12	3AXD50001056292	1
ACS880-204LC-0310A-5	OT1000E12	3AXD50001056292	1
ACS880-204LC-0410A-5	OT1000E12	3AXD50001056292	1
U_N = 690 V			
ACS880-204LC-0260A-7	OT1000E12	3AXD50001056292	1
ACS880-204LC-0310A-7	OT1000E12	3AXD50001056292	1
ACS880-204LC-0350A-7	OT1000E12	3AXD50001056292	1

Main contactor

IGBT supply unit	Main contactor (230 V / 115 V, IEC)		
Type	Type	Ordering code	Qty
U_N = 400 V			
ACS880-204LC-0270A-3	AF460	64430742	1
ACS880-204LC-0340A-3	AF460	64430742	1
ACS880-204LC-0410A-3	AF460	64430742	1
U_N = 500 V			
ACS880-204LC-0270A-5	AF460	64430742	1
ACS880-204LC-0310A-5	AF460	64430742	1
ACS880-204LC-0410A-5	AF460	64430742	1
U_N = 690 V			
ACS880-204LC-0260A-7	AF400	64399730	1
ACS880-204LC-0310A-7	AF400	64399730	1
ACS880-204LC-0350A-7	AF400	64399730	1

Main circuit breakers and wagons

You must equip the electric supply of a machinery with a main disconnecting device (IEC/EN60204-1). Frames 2×R7i…4×R7i have main circuit breaker instead of switch and contactor. This section lists suitable main circuit breakers.

IGBT supply unit	Main circuit breakers (230 V, IEC)		
Type	**Type**	**Ordering code**	**Qty**
U_N = 400 V			
ACS880-204LC-0530A-3	E2.2S-A800	3AXD50000426522	1
ACS880-204LC-0670A-3	E2.2S-A1200	3AXD50000048328	1
ACS880-204LC-0770A-3	E2.2S-A1200	3AXD50000048328	1
ACS880-204LC-1000A-3	E2.2S-A1600	3AXD50000048327	1
ACS880-204LC-1180A-3	E2.2S-A1600	3AXD50000048327	1
ACS880-204LC-1310A-3	E2.2S-A2000	3AXD50000048330	1
ACS880-204LC-1500A-3	E2.2S-A2000	3AXD50000048330	1
U_N = 500 V			
ACS880-204LC-0530A-5	E2.2S-A800	3AXD50000426522	1
ACS880-204LC-0670A-5	E2.2S-A1200	3AXD50000048328	1
ACS880-204LC-0770A-5	E2.2S-A1200	3AXD50000048328	1
ACS880-204LC-0990A-5	E2.2S-A1600	3AXD50000048327	1
ACS880-204LC-1180A-5	E2.2S-A1600	3AXD50000048327	1
ACS880-204LC-1310A-5	E2.2S-A2000	3AXD50000048330	1
ACS880-204LC-1500A-5	E2.2S-A2000	3AXD50000048330	1
U_N = 690 V			
ACS880-204LC-0500A-7	E2.2S-A800	3AXD50000426522	1
ACS880-204LC-0590A-7	E2.2S-A800	3AXD50000426522	1
ACS880-204LC-0680A-7	E2.2S-A1200	3AXD50000048328	1
ACS880-204LC-0760A-7	E2.2S-A1200	3AXD50000048328	1
ACS880-204LC-0880A-7	E2.2S-A1200	3AXD50000048328	1
ACS880-204LC-1020A-7	E2.2S-A1600	3AXD50000048327	1
ACS880-204LC-1170A-7	E2.2S-A1600	3AXD50000048327	1
ACS880-204LC-1340A-7	E2.2S-A2000	3AXD50000048330	1

Content of the 230 V air circuit breakers:

• Ekip Dip LI 3p WMP	1SDA077648R1 (E2.2S-A 1200) 1SDA077658R1 (E2.2S-A 1600) 1SDA077668R1 (E2.2S-A 2000)
• YO E1.2..E6.2 220-240 Vac/dc	1SDA073674R1
• YC E1.2..E6.2 220-240 Vac/dc	1SDA073687R1
• YU E1.2..E6.2 220-240 Vac/dc	1SDA073700R1
• M E2.2..E6.2 220-250 Vac/dc	1SDA073725R1
• MOC E2.2..E6.2	1SDA073781R1
• AUX 6Q 400V E2.2..E6.2	1SDA073756R1
• KLC-S Key lock open N.20005 E2.2..E6.2	1SDA073792R1
• KLP-S Key lock racked in/out N.20005 E2.2...E6.2 1st key	1SDA073807R1
• TRIPLE CERTIFIC: UL/IEC/CCC	1SDA083022R1 (E2.2S)

IGBT supply unit	Main circuit breakers (115 V, IEC)		
Type	**Type**	**Ordering code**	**Qty**
U_N = 400 V			
ACS880-204LC-0530A-3	E2.2S-A800	3AXD50000445936	1
ACS880-204LC-0670A-3	E2.2S-A1200	3AXD50000048351	1
ACS880-204LC-0770A-3	E2.2S-A1200	3AXD50000048351	1
ACS880-204LC-1000A-3	E2.2S-A1600	3AXD50000048329	1
ACS880-204LC-1180A-3	E2.2S-A1600	3AXD50000048329	1
ACS880-204LC-1310A-3	E2.2S-A2000	3AXD50000048342	1
ACS880-204LC-1500A-3	E2.2S-A2000	3AXD50000048342	1
U_N = 500 V			
ACS880-204LC-0530A-5	E2.2S-A800	3AXD50000445936	1
ACS880-204LC-0670A-5	E2.2S-A1200	3AXD50000048351	1
ACS880-204LC-0770A-5	E2.2S-A1200	3AXD50000048351	1
ACS880-204LC-0990A-5	E2.2S-A1600	3AXD50000048329	1
ACS880-204LC-1180A-5	E2.2S-A1600	3AXD50000048329	1
ACS880-204LC-1310A-5	E2.2S-A2000	3AXD50000048342	1
ACS880-204LC-1500A-5	E2.2S-A2000	3AXD50000048342	1
U_N = 690 V			
ACS880-204LC-0500A-7	E2.2S-A800	3AXD50000445936	1
ACS880-204LC-0590A-7	E2.2S-A800	3AXD50000445936	1
ACS880-204LC-0680A-7	E2.2S-A1200	3AXD50000048351	1
ACS880-204LC-0760A-7	E2.2S-A1200	3AXD50000048351	1
ACS880-204LC-0880A-7	E2.2S-A1200	3AXD50000048351	1
ACS880-204LC-1020A-7	E2.2S-A1600	3AXD50000048329	1
ACS880-204LC-1170A-7	E2.2S-A1600	3AXD50000048329	1
ACS880-204LC-1340A-7	E2.2S-A2000	3AXD50000048342	1

Content of the 115 V air circuit breakers:

• Ekip Dip LI 3p WMP	1SDA077648R1 (E2.2S-A 1200) 1SDA077658R1 (E2.2S-A 1600) 1SDA077668R1 (E2.2S-A 2000)
• YO E1.2..E6.2 110-120 Vac/dc	1SDA073672R1
• YC E1.2..E6.2 110-120 Vac/dc	1SDA073685R1
• YU E1.2..E6.2 110-120 Vac/dc	1SDA073698R1
• M E2.2...E6.2 100-130 Vac/dc	1SDA073724R1
• MOC E2.2..E6.2	1SDA073781R1
• AUX 6Q 400V E2.2..E6.2	1SDA073756R1
• KLC-S Key lock open N.20005 E2.2..E6.2	1SDA073792R1
• KLP-S Key lock racked in/out N.20005 E2.2...E6.2 1st key	1SDA073807R1
• TRIPLE CERTIFIC: UL/IEC/CCC	1SDA083022R1 (E2.2S)

IGBT supply unit	Wagons (IEC)		
Type	**Type**	**Ordering code**	**Qty**
U_N = 400 V			
ACS880-204LC-0530A-3	E2.2-A W 2000	3AXD50000048354	1
ACS880-204LC-0670A-3	E2.2-A W 2000	3AXD50000048354	1
ACS880-204LC-0770A-3	E2.2-A W 2000	3AXD50000048354	1
ACS880-204LC-1000A-3	E2.2-A W 2000	3AXD50000048354	1
ACS880-204LC-1180A-3	E2.2-A W 2000	3AXD50000048354	1
ACS880-204LC-1310A-3	E2.2-A W 2000	3AXD50000048354	1
ACS880-204LC-1500A-3	E2.2-A W 2000	3AXD50000048354	1
U_N = 500 V			
ACS880-204LC-0530A-5	E2.2-A W 2000	3AXD50000048354	1
ACS880-204LC-0670A-5	E2.2-A W 2000	3AXD50000048354	1
ACS880-204LC-0770A-5	E2.2-A W 2000	3AXD50000048354	1
ACS880-204LC-0990A-5	E2.2-A W 2000	3AXD50000048354	1
ACS880-204LC-1180A-5	E2.2-A W 2000	3AXD50000048354	1
ACS880-204LC-1310A-5	E2.2-A W 2000	3AXD50000048354	1
ACS880-204LC-1500A-5	E2.2-A W 2000	3AXD50000048354	1
U_N = 690 V			
ACS880-204LC-0500A-7	E2.2-A W FP 2000	3AXD50000048354	1
ACS880-204LC-0590A-7	E2.2-A W FP 2000	3AXD50000048354	1
ACS880-204LC-0680A-7	E2.2-A W FP 2000	3AXD50000048354	1
ACS880-204LC-0760A-7	E2.2-A W FP 2000	3AXD50000048354	1
ACS880-204LC-0880A-7	E2.2-A W FP 2000	3AXD50000048354	1
ACS880-204LC-1020A-7	E2.2-A W FP 2000	3AXD50000048354	1
ACS880-204LC-1170A-7	E2.2-A W FP 2000	3AXD50000048354	1
ACS880-204LC-1340A-7	E2.2-A W FP 2000	3AXD50000048354	1

Content of the 115 V and 230 V wagons:

- W FP Iu=2000 3p HR HR UL / 1SDA079698R1 (E2.2-A W FP 2000)
- AUP 5 contacts 400V E2.2...E6.2 - left set 1SDA080373R1

IEC busbar shim kit

For adapting E2.2S-A main circuit breaker to IEC bus bars, use bus bar shim kit. The following shim kit is available.

Type	Data	Ordering code	Illustration
E2.2S-A	EMAX2 E2.2 busbar shim kit	3AXD50000286324	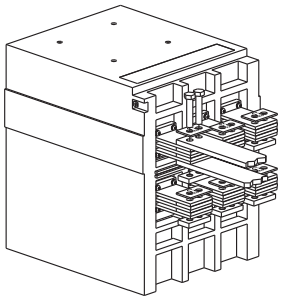 Instruction code: 3AXD50000286072

Main circuit breaker and wagon cover

One cover is needed for each main circuit breaker/wagon pair. See Drive modules cabinet design and construction instructions (3AUA0000107668 [English]) for further details regarding arc protection.

IEC: IP54 flange, key N.20005 E2.2…E6.2, 1SDA073869R1, ordering code: 3AXD50000049760

UL: Hinged Window, APWK2016H, ordering code 3AUA0000222786

Main fuses

IGBT supply unit	Main fuses			
Type	Type	Size	Ordering code	Qty
U_N = 400 V				
ACS880-204LC-0270A-3	170M4413	450	68731623	3
ACS880-204LC-0340A-3	170M4415	550	68731631	3
ACS880-204LC-0420A-3	170M4417	700	64607383	3
ACS880-204LC-0530A-3	170M6413	900	3AXD50000000148	3
ACS880-204LC-0670A-3	170M6415	1100	68731658	3
ACS880-204LC-0770A-3	170M6416	1250	68244463	3
ACS880-204LC-1000A-3	170M7061	1600	3AUA0000220709	3
ACS880-204LC-1180A-3	170M7062	2000	68689589	3
ACS880-204LC-1310A-3	170M7063	2500	68752591	3
ACS880-204LC-1500A-3	170M7063	2500	68752591	3
U_N = 500 V				
ACS880-204LC-0270A-5	170M4413	450	68731623	3
ACS880-204LC-0340A-5	170M4415	550	68731631	3
ACS880-204LC-0410A-5	170M4417	700	64607383	3
ACS880-204LC-0530A-5	170M6413	900	3AXD50000000148	3
ACS880-204LC-0670A-5	170M6415	1100	68731658	3
ACS880-204LC-0770A-5	170M6416	1250	68244463	3
ACS880-204LC-1000A-5	170M7061	1600	3AUA0000220709	3
ACS880-204LC-1180A-5	170M7062	2000	68689589	3
ACS880-204LC-1310A-5	170M7063	2500	68752591	3

IGBT supply unit	Main fuses			
Type	Type	Size	Ordering code	Qty
ACS880-204LC-1500A-5	170M7063	2500	68752591	3
U_N = 690 V				
ACS880-204LC-0260A-7	170M4413	450	68731623	3
ACS880-204LC-0310A-7	170M4414	500	3AXD50000000242	3
ACS880-204LC-0350A-7	170M4416	630	3AXD50000000246	3
ACS880-204LC-0500A-7	170M6413	900	3AXD50000000148	3
ACS880-204LC-0590A-7	170M6414	1000	68333296	3
ACS880-204LC-0680A-7	170M6415	1100	68731658	3
ACS880-204LC-0760A-7	170M6416	1250	68244463	3
ACS880-204LC-0880A-7	170M7061	1600	3AUA0000220709	3
ACS880-204LC-1020A-7	170M7062	2000	68689589	3
ACS880-204LC-1170A-7	170M7062	2000	68689589	3
ACS880-204LC-1340A-7	170M7063	2500	68752591	3

AC fuses

The AC fuses protect the input cables and the module against short circuits.

IGBT supply unit	AC fuses			
Type	Type	Size	Ordering code	Qty
U_N = 400 V				
ACS880-204LC-0530A-3	170M4413	450	68731623	6
ACS880-204LC-0670A-3	170M4415	550	68731631	6
ACS880-204LC-0770A-3	170M4417	700	64607383	6
ACS880-204LC-1000A-3	170M4415	550	68731631	9
ACS880-204LC-1180A-3	170M4417	700	64607383	9
ACS880-204LC-1310A-3	170M4415	550	68731631	12
ACS880-204LC-1500A-3	170M4417	700	64607383	12
U_N = 500 V				
ACS880-204LC-0530A-5	170M4413	450	68731623	6
ACS880-204LC-0670A-5	170M4415	550	68731631	6
ACS880-204LC-0770A-5	170M4417	700	64607383	6
ACS880-204LC-1000A-5	170M4415	550	68731631	9
ACS880-204LC-1180A-5	170M4417	700	64607383	9
ACS880-204LC-1310A-5	170M4415	550	68731631	12
ACS880-204LC-1500A-5	170M4417	700	64607383	12
U_N = 690 V				
ACS880-204LC-0500A-7	170M4413	450	68731623	6
ACS880-204LC-0590A-7	170M4414	500	3AXD50000000242	6
ACS880-204LC-0680A-7	170M4416	630	3AXD50000000246	6
ACS880-204LC-0760A-7	170M4413	450	68731623	9
ACS880-204LC-0880A-7	170M4414	500	3AXD50000000242	9

IGBT supply unit	AC fuses			
Type	Type	Size	Ordering code	Qty
ACS880-204LC-1020A-7	170M4416	630	3AXD50000000246	9
ACS880-204LC-1170A-7	170M4414	500	3AXD50000000242	12
ACS880-204LC-1340A-7	170M4416	630	3AXD50000000246	12

AC-DC charging kits for line-up charging

The capacitor bank of the IGBT supply module needs to be charged during the start-up before connecting the module to a three-phase power line. The charging kit contains the main parts of the charging circuit.

Note: The charging components are dimensioned for DC link capacitances equal to 3 × IGBT supply unit DC capacitance (1×ISU + 2×INU), 5 × IGBT supply unit DC capacitance (1×ISU + 4×INU) and 7 × IGBT supply unit DC capacitance (1×ISU + 6×INU). For example, 1×ISU + 2×INU means that there is one ISU with two INUs with the same capacitance. There can be more INUs as long as the capacitance limit is not exceeded. If the total DC link capacitance (including IGBT supply and inverter module DC capacitances) exceeds these limits, the components must be redimensioned. Contact ABB representative for more information. The capacitances of the IGBT supply module types and the inverter module types are specified in their technical data tables. The maximum allowed number of charging cycles of the DC capacitors (ie, power-ups by applying power) is two in five minutes.

The following table shows the charging kits available for each module type.

ACS880-204LC-...	2×INU		4×INU		6×INU	
	Ordering code (IEC)	Max. capa-citance (mF)	Ordering code (IEC)	Max. capa-citance (mF)	Ordering code (IEC)	Max. capa-citance (mF)
U_N = 400 V						
0270A-3	3AXD50000250776	28.8	3AXD50000250776	48.0	3AXD50000250776	67.2
0340A-3	3AXD50000250776	28.8	3AXD50000250776	48.0	3AXD50000250776	67.2
0420A-3	3AXD50000250776	28.8	3AXD50000250776	48.0	3AXD50000250776	67.2
0530A-3	3AXD50000250776	57.6	3AXD50000250776	96.0	3AXD50000250776	134.4
0670A-3	3AXD50000250776	57.6	3AXD50000250776	96.0	3AXD50000250776	134.4
0770A-3	3AXD50000250776	57.6	3AXD50000250776	96.0	3AXD50000250776	134.4
1000A-3	3AXD50000250776	86.4	3AXD50000250776	144.0	3AXD50000250776	201.6
1180A-3	3AXD50000250776	86.4	3AXD50000250776	144.0	3AXD50000250776	201.6
1310A-3	3AXD50000250776	115.2	3AXD50000250776	192.0	3AXD50000250776	268.8
1500A-3	3AXD50000250776	115.2	3AXD50000250776	192.0	3AXD50000250776	268.8
U_N = 500 V						
0270A-5	3AXD50000250776	28.8	3AXD50000250776	48.0	3AXD50000250776	67.2
0340A-5	3AXD50000250776	28.8	3AXD50000250776	48.0	3AXD50000250776	67.2
0410A-5	3AXD50000250776	28.8	3AXD50000250776	48.0	3AXD50000250776	67.2
0530A-5	3AXD50000250776	57.6	3AXD50000250776	96.0	3AXD50000250776	134.4
0670A-5	3AXD50000250776	57.6	3AXD50000250776	96.0	3AXD50000250776	134.4
0770A-5	3AXD50000250776	57.6	3AXD50000250776	96.0	3AXD50000250776	134.4
1000A-5	3AXD50000250776	86.4	3AXD50000250776	144.0	3AXD50000250776	201.6
1180A-5	3AXD50000250776	86.4	3AXD50000250776	144.0	3AXD50000250776	201.6
1310A-5	3AXD50000250776	115.2	3AXD50000250776	192.0	3AXD50000250776	268.8
1500A-5	3AXD50000250776	115.2	3AXD50000250776	192.0	3AXD50000250776	268.8
U_N = 690 V						
0260A-7	3AXD50000250776	15.9	3AXD50000250776	26.5	3AXD50000250776	37.1
0310A-7	3AXD50000250776	15.9	3AXD50000250776	26.5	3AXD50000250776	37.1
0350A-7	3AXD50000250776	15.9	3AXD50000250776	26.5	3AXD50000250776	37.1
0500A-7	3AXD50000250776	32.1	3AXD50000250776	53.5	3AXD50000250776	74.9
0590A-7	3AXD50000250776	32.1	3AXD50000250776	53.5	3AXD50000250776	74.9
0680A-7	3AXD50000250776	32.1	3AXD50000250776	53.5	3AXD50000250776	74.9
0760A-7	3AXD50000250776	48.0	3AXD50000250776	80.0	3AXD50000250790	112.0
0880A-7	3AXD50000250776	48.0	3AXD50000250776	80.0	3AXD50000250790	112.0
1020A-7	3AXD50000250776	48.0	3AXD50000250776	80.0	3AXD50000250790	112.0
1170A-7	3AXD50000250776	63.9	3AXD50000250790	106.5	3AXD50000250790	149.1
1340A-7	3AXD50000250776	63.9	3AXD50000250790	106.5	3AXD50000250790	149.1

For charging kit contents, see the technical data.

AC busbars

Used with	Qty	Ordering code	Kit code	Illustration
600 mm VX25 enclosure	1	3AXD50001013516	L-6-7-114-VX	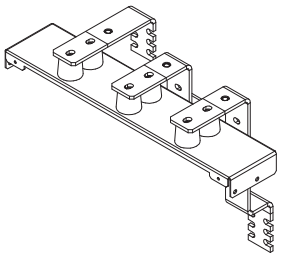 Instruction code: 3AXD50001012540
600 mm VX25 enclosure	1	3AXD50001013530	L-6-7-115-VX	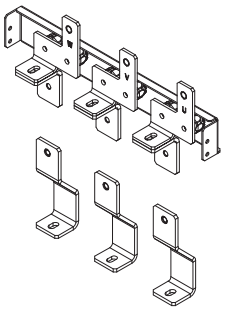 Instruction code: 3AXD50001013387
600 mm VX25 enclosure	1	3AXD50000371013	L-6-X-012-VX	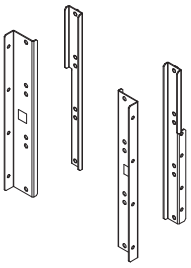 Instruction code: 3AXD50000370870

DC-side components

DC bus installation parts (for Rittal VX25 enclosures)

The brackets in this kit act as a mounting base for the busbar supports of the Rittal Flat-PLS DC bus and ensure its correct placement and alignment inside the cabinet line-up.

The designs shown in this manual for Rittal VX25 enclosures use the Rittal Flat-PLS busbar system. Make sure that the current in the drive system does not exceed the current-carrying capacity of the busbars.

Used with ...	Qty	Ordering code	Kit code	Illustration
VX25 enclosure	1 kit per cubicle	3AXD50000333387	A-468-X-001-VX	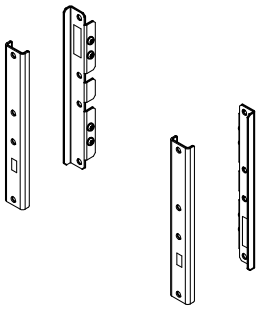 Instruction code: 3AXD50000333639

DC connection parts (for Rittal VX25 enclosures)

Used with...	Qty	Ordering code	Kit code	Illustration
600 mm VX25 enclosure	1	3AXD50001013554	L-6-7-275-VX	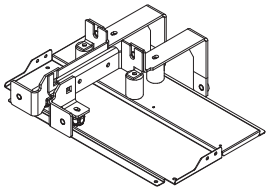 Instruction code: 3AXD50001048426

Units with DC switch

Used with...	Qty	Ordering code	Kit code	Illustration
600 mm VX25 enclosure and OT600		3AXD50001013608	L-6-7-219-VX	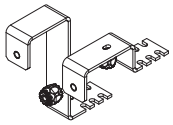 Instruction code: 3AXD50001060497

Used with...	Qty	Ordering code	Kit code	Illustration
600 mm VX25 enclosure and OT600	1	3AXD50001013578	L-6-7-277-VX	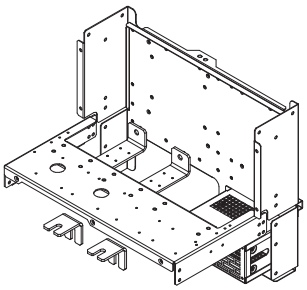 Instruction code: 3AXD50001050757

Units without DC switch (fuses only)

Used with...	Qty	Ordering code	Kit code	Illustration
600 mm VX25 enclosure	1	3AXD50001013615	L-6-7-220-VX	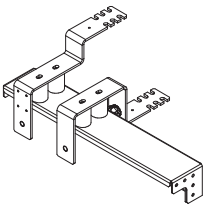 Instruction code: 3AXD50001059330
600 mm VX25 enclosure	1	3AXD50001058944	L-6-7-279-VX	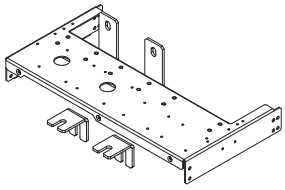 Instruction code: 3AXD50001059750

DC fuses

IGBT supply unit	DC fuses			
Type	Type	Size	Ordering code	Qty
U_N = 400 V				
ACS880-204LC-0270A-3	170M6543	550	3AXD50000698752	2
ACS880-204LC-0340A-3	170M6545	700	68735980	2
ACS880-204LC-0420A-3	170M6547	900	63919381	2
ACS880-204LC-0530A-3	170M6543	550	3AXD50000698752	4
ACS880-204LC-0670A-3	170M6545	700	68735980	4
ACS880-204LC-0770A-3	170M6547	900	63919381	4
ACS880-204LC-1000A-3	170M6545	700	68735980	6
ACS880-204LC-1180A-3	170M6547	900	63919381	6
ACS880-204LC-1310A-3	170M6545	700	68735980	8
ACS880-204LC-1500A-3	170M6547	900	63919381	8

IGBT supply unit	DC fuses			
Type	Type	Size	Ordering code	Qty
U_N = 500 V				
ACS880-204LC-0270A-5	170M6543	550	3AXD50000698752	2
ACS880-204LC-0340A-5	170M6545	700	68735980	2
ACS880-204LC-0410A-5	170M6547	900	63919381	2
ACS880-204LC-0530A-5	170M6543	550	3AXD50000698752	4
ACS880-204LC-0670A-5	170M6545	700	68735980	4
ACS880-204LC-0770A-5	170M6547	900	63919381	4
ACS880-204LC-1000A-5	170M6545	700	68735980	6
ACS880-204LC-1180A-5	170M6547	900	63919381	6
ACS880-204LC-1310A-5	170M6545	700	68735980	8
ACS880-204LC-1500A-5	170M6547	900	63919381	8
U_N = 690 V				
ACS880-204LC-0260A-7	170M6543	550	3AXD50000698752	2
ACS880-204LC-0310A-7	170M6544	630	63903167	2
ACS880-204LC-0350A-7	170M6545	700	68735980	2
ACS880-204LC-0500A-7	170M6543	550	3AXD50000698752	4
ACS880-204LC-0590A-7	170M6544	630	63903167	4
ACS880-204LC-0680A-7	170M6545	700	68735980	4
ACS880-204LC-0760A-7	170M6543	550	3AXD50000698752	6
ACS880-204LC-0880A-7	170M6544	630	63903167	6
ACS880-204LC-1020A-7	170M6545	700	68735980	6
ACS880-204LC-1170A-7	170M6544	630	63903167	8
ACS880-204LC-1340A-7	170M6545	700	68735980	8

DC switch-disconnector kits for unit charging

For further information on using the kits, see section Supply unit control devices (page 36).

Used with... ACS880-204LC-...	IEC/UL	Switch type Handle type Shaft type	Qty	Ordering code	Instruction code
0270A-3 0340A-3 0410A-3 0270A-5 0310A-5 0410A-5 0260A-7 0310A-7 0350A-7	IEC	OT630E11 OHB145J12 OXP12X465	1	3AXD50000823376	3AXD50000823352

The kit contains the following components:

- DC switch-disconnector (type indicated in table)
- Operating handle (type indicated in table)

- Operating shaft (type indicated in table)
- Two OA1G10 and two OA3G01 auxiliary contacts
- OTZT2A (OT4…) or OTZT3A (OT6…) interlock
- PDAL2/24DC interlock
- OHZX10 alignment ring.

Note that the kits are not available for frames 2×R7i…4×R7i. Contact your local ABB representative.

Unit charging components (for units with DC switch-disconnector)

A unit charging circuit is required if the supply unit is equipped with a DC switch/disconnector.

Unit charging kit for frame 1×R7i

IEC/UL	Switch type	Qty	Ordering code	Instruction code
IEC	OS160GD04F	1	3AXD50000826933	3AXD50000827046

The kit contains the following components:

- Charging switch (type indicated in table) with terminal shrouds
- OHB65J6 operating handle
- OXP6X430 operating shaft
- 2 pcs of OA3G01 auxiliary contacts
- BSFC-12C charging controller
- 4 pcs 170M2676 fuses and fuse holders (kit 3AXD50000826940 contains FWJ-30A fuses and conversion parts)
- OHZX10 alignment ring.

Charging resistors for frame 1×R7i

Used with...	Qty	Ordering code	Data
Frame R7i with DC switch (IEC)	4	10028531	33 ohm

Fiber optic cables

A pair of optical cables is needed to connect the charging controller to the supply module.

The following kits, each consisting of a pair of plastic fiber optic cables, are available from ABB:

Length	Kit type designation	Ordering code
2 m (6.6 ft)	NLWC-02	58988821
3 m (9.8 ft)	NLWC-03	58948233
5 m (16.4 ft)	NLWC-05	58948250
7 m (23 ft)	NLWC-07	58948268
10 m (32.8 ft)	NLWC-10	58948276

Switch-disconnector for line-up charging

Load break switch is needed when the delivery contains both line-up charging and unit charging. For further information on using the kits, see section Supply unit control devices (page 36).

Used with...	Switch-disconnector for line-up charging (IEC)				
	Type	Rating	Qty	Ordering code	Instruction code
Frame 1×R7i	OT630E11 kit	630 A, 1000 V	1	3AXD50000507078	3AXD50000660582

The kit contains the following components:

- OXP12X250 operating shaft
- OHB150J12P operating handle
- OA1G10 auxiliary contact
- OHZX10 alignment ring.

Common mode filters

Common mode filtering reduces bearing currents and is required for electromagnetic compatibility (EMC). The filtering is implemented by installing two toroidal cores onto the DC busbars.

Used with	Qty	Ordering code	Kit code	Illustration
All enclosure types	2 per module	3AXD50000566785	-	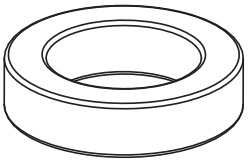

Cooling system parts

Cooling system parts (600 mm VX25 enclosure with 1 module)

Note that the fans and heat exchangers are not available for frames 2×R7i...4×R7i. Contact your local ABB representative.

Component	Qty	Ordering code	Kit code	Illustration
Heat exchanger assembly	1	3AXD50001013622	L-6-7-446-VX	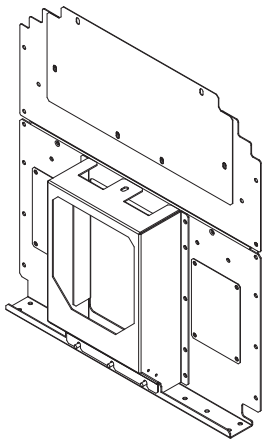 Instruction code: 3AXD50001061906
Fan mechanics	1	3AXD50001013639	L-6-7-447-VX	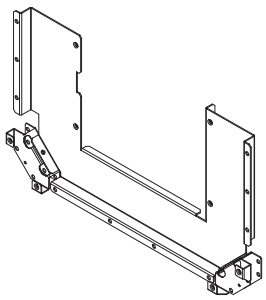 Instruction code: 3AXD50001062439
BLCL-13LC-7 (600 mm Rittal VX25 enclosure)	1 / filter cubicle	3AXD50000344970	L-6-8-405	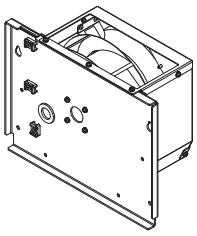 **Note:** Fan to be ordered separately.
BLCL-13LC-7 (600 mm Rittal VX25 enclosure)	1	3AXD50000479795	L-468-8-446	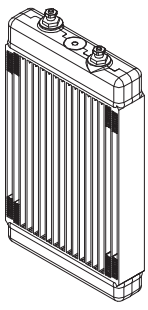 Instruction code: 3AXD50000431588

Cabinet fans (600 mm VX25 enclosure with 1 module)

The fan is selected according to the auxiliary voltage.

Auxiliary voltage	Qty	Ordering code
230 V AC (50/60 Hz)	1	3AXD50000050763
115 V AC (50/60 Hz)	1	3AXD50000050767

Coolant distribution manifold kits

Enclosure	Qty	Ordering code	Kit code	Illustration
400 mm VX25 enclosure with 1 module	1	3AXD50000044084	L-468-8-441	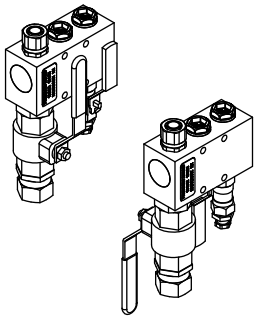 Instruction code: 3AXD50000048217

The manifold kits contain:

Inlet and outlet manifolds

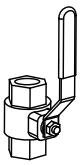 Inlet and outlet valves

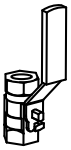 Drain valves

Nipples for connecting the valves to manifolds

Connectors for PA piping

Plugs for unused piping connectors

Chokes for flow limitation – not used with the ACS880-204LC.

You must order the following parts separately as they are not included in the manifold kits:

- Connectors to attach to inlet, outlet and drain valves
- Connectors to attach to main pipes

- Pipes between main pipe and inlet/outlet valves
- Main pipes
- Drain pipes.

Note: The inlet and outlet valves have an R3/4" internal thread. The drain valves have an R3/8" internal thread.

Piping

PA (polyamide) pipe is available in various diameters on 50-meter reels. Refer to the image for application.

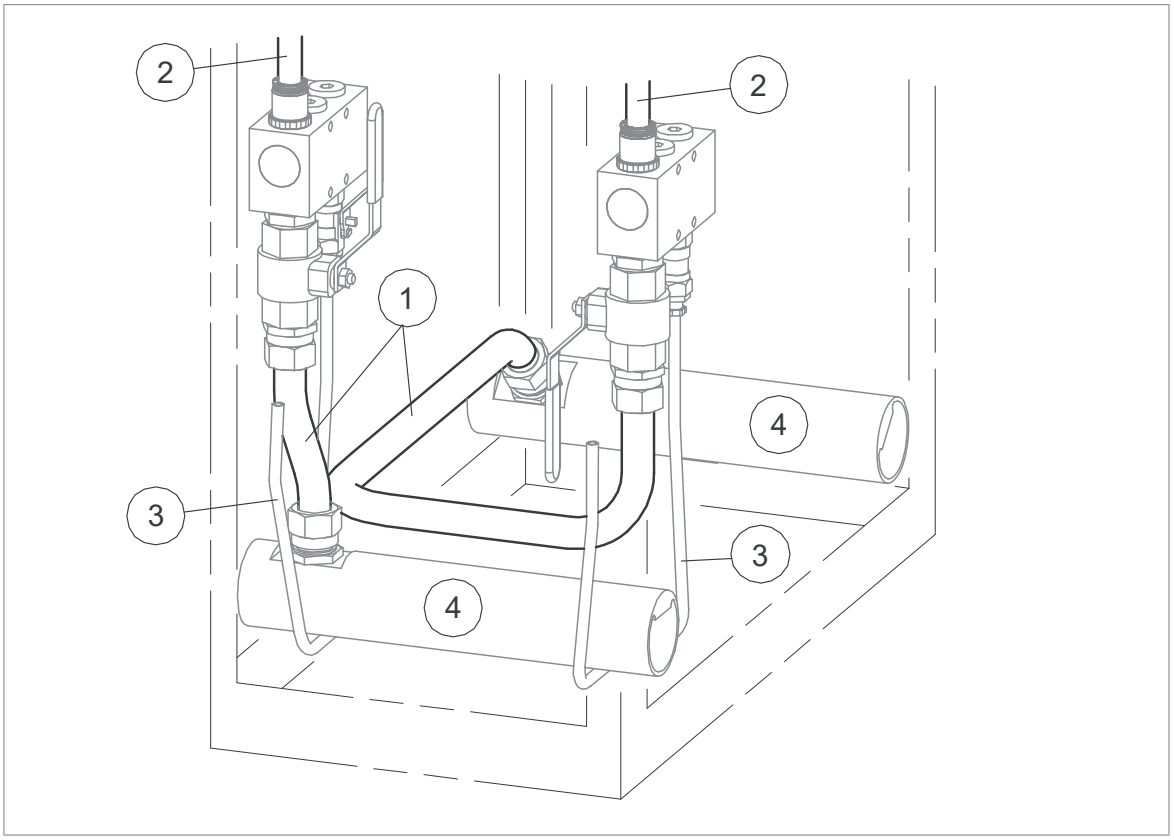

Item	Data	Ordering code
1	PA12P40, 22/18 mm, 50 m	3AXD50000441419
2[1)]	PA12P40, 16/13 mm, 50 m PA12P40, 6/4 mm, 100 m	3AXD50000047488 3AXD50001075316
3	PA11P40, 8/6 mm, 50 m	3AXD50000419302
4	Not part of standard product offering	

1) Use 16/13 mm pipe for the R7i module and LCL filter, which are connected in series between the manifolds. Use 8/6 mm pipe for the heat exchanger, which is connected in parallel with the module and LCL filter between the manifolds.

Frame R8i and multiples

IGBT supply modules

IGBT supply units consisting of frame R8i IGBT supply modules are to be ordered as separate modules.

IGBT supply unit		Modules used	
Type	**Frame size**	**Qty**	**Ordering code (for options see below)**
U_N = 690 V			
ACS880-204LC-0360A-7	R8i	1	ACS880-104LC-0390A-7+E205
ACS880-204LC-0400A-7	R8i	1	ACS880-104LC-0430A-7+E205
ACS880-204LC-0450A-7	R8i	1	ACS880-104LC-0480A-7+E205
ACS880-204LC-0480A-7	R8i	1	ACS880-104LC-0530A-7+E205
ACS880-204LC-0560A-7	R8i	1	ACS880-104LC-0600A-7+E205
ACS880-204LC-0620A-7	R8i	1	ACS880-104LC-0670A-7+E205
ACS880-204LC-0700A-7	R8i	1	ACS880-104LC-0750A-7+E205
ACS880-204LC-0770A-7	R8i	1	ACS880-104LC-0850A-7+E205
ACS880-204LC-0930A-7	2×R8i	2	ACS880-104LC-0530A-7+E205
ACS880-204LC-1090A-7	2×R8i	2	ACS880-104LC-0600A-7+E205
ACS880-204LC-1180A-7	2×R8i	2	ACS880-104LC-0670A-7+E205
ACS880-204LC-1360A-7	2×R8i	2	ACS880-104LC-0750A-7+E205
ACS880-204LC-1500A-7	2×R8i	2	ACS880-104LC-0850A-7+E205
ACS880-204LC-1800A-7	3×R8i	3	ACS880-104LC-0670A-7+E205
ACS880-204LC-2020A-7	3×R8i	3	ACS880-104LC-0750A-7+E205
ACS880-204LC-2220A-7	3×R8i	3	ACS880-104LC-0850A-7+E205
ACS880-204LC-2670A-7	4×R8i	4	ACS880-104LC-0750A-7+E205
ACS880-204LC-2930A-7	4×R8i	4	ACS880-104LC-0850A-7+E205

Ordering code format	Option codes
[Module type] +code [+code] … For example, **ACS880-104LC-0480A-7 +E205**	**+E205**: Internal du/dt filtering. Standard with 690 V modules.

Note: The following components are also required to construct a working IGBT supply unit and must be ordered separately:

- LCL filter
- An ACS-AP-x control panel is required for the commissioning of an ACS880 drive system, even if the Drive composer PC tool is used.
- Control unit
- Common mode filters
- Quick connector
- Fiber optic cabling from control unit to each IGBT supply module.

The other parts listed in this chapter for this frame size

- may be required by the application, or
- make the installation or use of the module easier.

LCL filters

LCL filter delivery contains LCL filter components as loose parts. LCL filter contains the grid-side choke, converter-side choke, capacitors and resistor. For contents, see Kit contents of the LCL filters.

ACS880-204LC-...	LCL filter		
	LCL filter type	Qty	Ordering code
U_N = 690 V			
0360A-7	BLCL-15LC-7	1	3AXD50000234417
0400A-7	BLCL-15LC-7	1	3AXD50000234417
0450A-7	BLCL-15LC-7	1	3AXD50000234417
0480A-7	BLCL-15LC-7	1	3AXD50000234417
0560A-7	BLCL-15LC-7	1	3AXD50000234417
0620A-7	BLCL-15LC-7	1	3AXD50000234417
0700A-7	BLCL-15LC-7	1	3AXD50000234417
0770A-7	BLCL-15LC-7	1	3AXD50000234417
0930A-7	BLCL-24LC-7	1	3AXD50000234431
1090A-7	BLCL-24LC-7	1	3AXD50000234431
1180A-7	BLCL-24LC-7	1	3AXD50000234431
1360A-7	BLCL-25LC-7	1	3AXD50000234448
1500A-7	BLCL-25LC-7	1	3AXD50000234448
1800A-7	BLCL-24LC-7	2	3AXD50000234431
2020A-7	BLCL-24LC-7	2	3AXD50000234431
2220A-7	BLCL-24LC-7	2	3AXD50000234431
2670A-7	BLCL-25LC-7	2	3AXD50000234448
2930A-7	BLCL-25LC-7	2	3AXD50000234448

Control panel

The control panel is not included with the module but must be ordered separately. One control panel is required for the commissioning of an ACS880 drive system, even if the Drive Composer PC tool is used.

The control panel can be flush mounted on the cabinet door with the help of a door mounting kit. For more information on the control panel, see ACS-AP-I, -S, -W and ACH-AP-H, -W Assistant control panels user's manual (3AUA0000085685 [English]).

Type	Description	Ordering code	Illustration
ACS-AP-W	Control panel with Bluetooth	3AXD50000025965	
DPMP-01	Door mounting kit (IP55)	3AUA0000108878	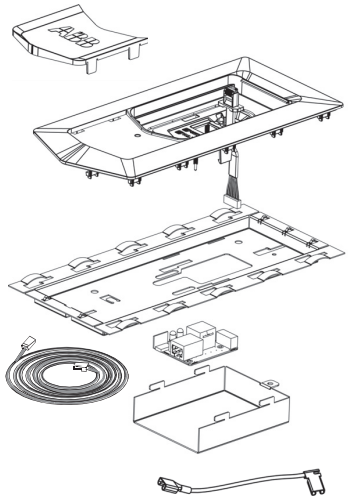
DPMP-02	Door mounting kit (IP65)	3AXD50000009374	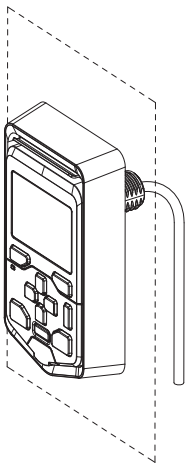

For more information on the door mounting kits, such as the contents of the kit, see the installation manuals:

- DPMP-01 mounting platform for control panels installation guide (3AUA0000100140 [English])
- DPMP-02/03 mounting platform for control panels installations guide (3AUA0000136205 [English]).

Control electronics

Control unit

One BCU control unit is required per IGBT supply unit. The type of the control unit depends on the number of IGBT supply modules as shown below. The control unit is delivered with a memory unit containing the ACS880 IGBT supply control program.

Frame size	Control unit type	Ordering code
R8i	BCU-02	3AXD50000002937
2×R8i...4×R8i	BCU-12	3AXD50000015806

Frame size	Control unit kit for optimal grid control (option +N8053)	Ordering code
R8i	BCU N8053 kit 1×R8i OGC ISU	3AXD50000821129
2×R8i	BCU N8053 kit 2×R8i OGC ISU	3AXD50000821136
3×R8i	BCU N8053 kit 3×R8i OGC ISU	3AXD50000821150
4×R8i	BCU N8053 kit 4×R8i OGC ISU	3AXD50000821167

Note: Fiber optic communication with another control unit (such as that of the inverter unit) requires an RDCO-0x DDCS communication module. For more information, see RDCO-0x DDCS communication option modules user's manual (3AFE64492209 [English]).

For more information on optional modules, see appropriate option module manual.

Fiber optic cables

Each frame R8i module is connected to the control unit with a pair of fiber optic cables.

The following kits, each consisting of a pair of plastic fiber optic cables, are available from ABB:

Length	Kit type designation	Ordering code
2 m (6.6 ft)	NLWC-02	58988821
3 m (9.8 ft)	NLWC-03	58948233
5 m (16.4 ft)	NLWC-05	58948250
7 m (23 ft)	NLWC-07	58948268
10 m (32.8 ft)	NLWC-10	58948276

Auxiliary measurement unit (BAMU)

The BAMU is a measurement unit for precise voltage and current measurements. It is highly recommended for use with a weak network, and mandatory when used in a grid converter (i.e. when the optional optimal grid control functionality is used).

Frame size	Unit type	Ordering code
All	BAMU-12C	3AXD50000045879

For more information, see

- section Weak supply networks (page 41)
- Optimal grid control (option +N8053) for ACS880 multidrives (3AXD50000220717 [English])
- BAMU-12C auxiliary measurement unit hardware manual (3AXD50000117840 [English]).

Note: You must have adequate amount of fiber optic connections in the control unit if you use a BAMU auxiliary measurement unit with parallel-connected IGBT supply modules.

CIO-01 I/O module

CIO-01 I/O module for distributed I/O bus control is not included in the module delivery, but can be ordered separately. The distributed I/O bus controls and supervises each cabinet fan separately. It indicates malfunctioning fans by warning or fault messages. One CIO-01 can monitor and control up to 4 cabinet fans.

For more information, see CIO-01 I/O module and distributed I/O bus user's manual (3AXD50000126880 [English]).

Type	Data	Qty	Ordering code
CIO-01	CIO-01 I/O module for distributed I/O bus control	1	3AXD50000041983

Mechanical installation accessories

These kits include parts that are used for installing the module and LCL filter in the enclosure.

Adapter kit (for Rittal VX25 enclosures)

These parts attach to the left-hand and right-hand sides of the VX25 enclosure frame and act as a mounting base for the module guides of the supply modules.

Used with...	Qty	Ordering code	Kit code	Illustration
400/600/800 mm VX25 enclosure	1	3AXD50000360543	L-468-8-020-VX	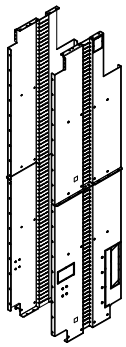 Instruction code: 3AXD50000327591
BLCL-15LC-7, BLCL-24LC-7 and BLCL-25LC-7 (600 mm Rittal VX25 enclosure)	1	3AXD50000426652	L-468-8-314-VX	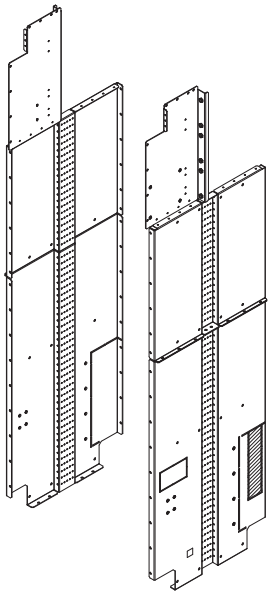 Instruction code: 3AXD50000429653

Module top/bottom guides

This kit contains the frames that support the module at the top and the bottom.

Used with...	Qty	Ordering code	Kit code	Illustration
400 mm generic enclosure	1	3AXD50000043678	L-4-8-301	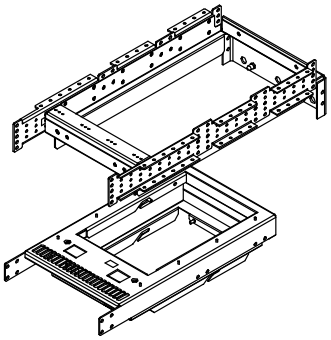 Instruction code: 3AXD50000043726
400 mm Rittal VX25 enclosure	1	3AXD50000360598	L-4-8-301-VX	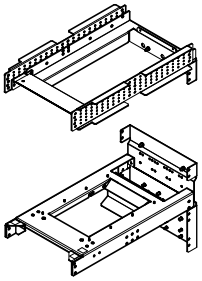 Instruction code: 3AXD50000330461
600 mm generic enclosure	1	3AXD50000041710	L-6-8-302	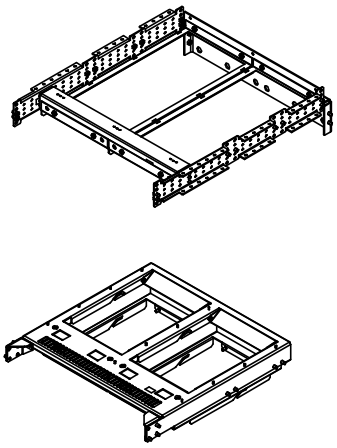 Instruction code: 3AXD50000041836
600 mm Rittal VX25 enclosure	1	3AXD50000361090	L-6-8-302-VX	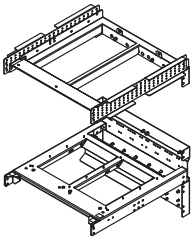 Instruction code: 3AXD50000330201

Used with...	Qty	Ordering code	Kit code	Illustration
800 mm generic enclosure	1	3AXD50000041248	L-8-8-303	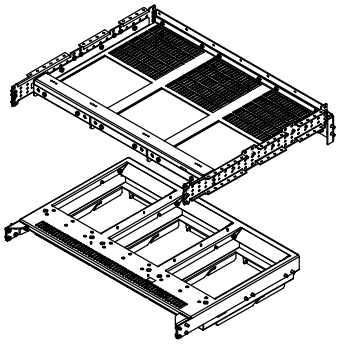 Instruction code: 3AXD50000041461
800 mm Rittal VX25 enclosure	1	3AXD50000361274	L-8-8-303-VX	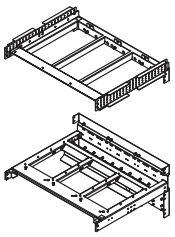 Instruction code: 3AXD50000329502

Shrouding

This kit contains the shroud to cover the top part of the cubicle with the necessary brackets and screws.

Used with...	Qty	Ordering code	Kit code	Illustration
400 mm Rittal VX25 enclosure	1	3AXD50000361083	L-4-8-022-VX	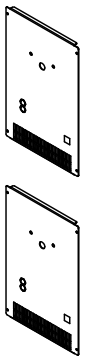 Instruction code: 3AXD50000353354
600 mm Rittal VX25 enclosure	1	3AXD50000361267	L-6-8-023-VX	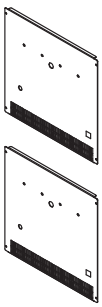 Instruction code: 3AXD50000353521
800 mm Rittal VX25 enclosure	1	3AXD50000361427	L-8-8-024-VX	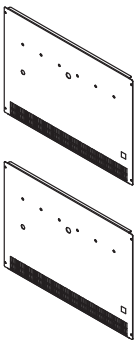 Instruction code: 3AXD50000353125

Used with...	Qty	Ordering code	Kit code	Illustration
BLCL-15LC-7, BLCL-24LC-7 and BLCL-25LC-7 (600 mm Rittal VX25 enclosure)	1	3AXD50000426638	A-6-8-027-VX	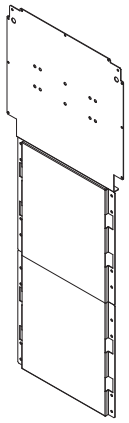 Instruction code: 3AXD50000431632

Marine support kit for LCL filters

Used with...	Qty	Ordering code	Kit code	Illustration
BLCL-15LC-7, BLCL-24LC-7 and BLCL-25LC-7 (600 mm Rittal VX25 enclosure)	1	3AXD50000457885	L-6-8-500-VX	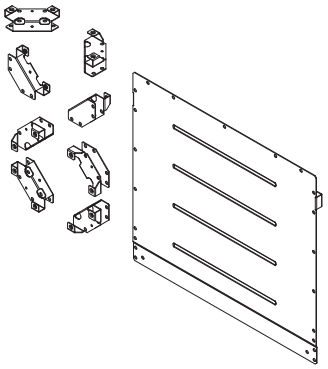

Lifting device

Use the lifting device when replacing a module in the Rittal VX25 enclosure.

Frame	Enclosure	Qty	Ordering code	Illustration
R7i, R8i	Rittal VX25	1	3AXD50000439997	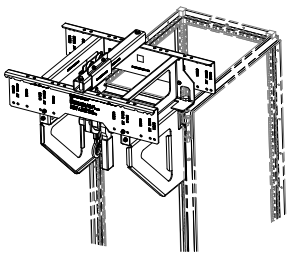 Instruction code: 3AXD50000210268, 3AXD50000439409

AC-side components

Main circuit breakers and wagons

You must equip the electric supply of a machinery with a main disconnecting device (IEC/EN60204-1). The main power line is equipped with a main a main circuit breaker [Q1]. This section lists suitable main circuit breakers.

IGBT supply unit	Main circuit breakers (230 V, IEC)		
Type	Type	Ordering code	Qty
U_N = 690 V			
ACS880-204LC-0360A-7	E2.2S-A800	3AXD50000426522	1
ACS880-204LC-0400A-7	E2.2S-A800	3AXD50000426522	1
ACS880-204LC-0450A-7	E2.2S-A800	3AXD50000426522	1
ACS880-204LC-0480A-7	E2.2S-A800	3AXD50000426522	1
ACS880-204LC-0560A-7	E2.2S-A800	3AXD50000426522	1
ACS880-204LC-0620A-7	E2.2S-A800	3AXD50000426522	1
ACS880-204LC-0700A-7	E2.2S-A1200	3AXD50000048328	1
ACS880-204LC-0770A-7	E2.2S-A1200	3AXD50000048328	1
ACS880-204LC-0930A-7	E2.2S-A1200	3AXD50000048328	1
ACS880-204LC-1090A-7	E2.2S-A1600	3AXD50000048327	1
ACS880-204LC-1180A-7	E2.2S-A1600	3AXD50000048327	1
ACS880-204LC-1360A-7	E2.2S-A2000	3AXD50000048330	1
ACS880-204LC-1500A-7	E2.2S-A2000	3AXD50000048330	1
ACS880-204LC-1800A-7	E4.2S-A2500	3AXD50000048343	1
ACS880-204LC-2020A-7	E4.2S-A2500	3AXD50000048343	1
ACS880-204LC-2220A-7	E4.2S 3200	3AXD50000048346	1
ACS880-204LC-2670A-7	E4.2V 4000	3AXD50000189571	1
ACS880-204LC-2930A-7	E4.2V 4000	3AXD50000189571	1

IGBT supply unit	Main circuit breakers (230 V, UL)		
Type	Type	Ordering code	Qty
U_N = 690 V			
ACS880-204LC-0360A-7	E4.2V-A 800	3AXD50000826018	1
ACS880-204LC-0400A-7	E4.2V-A 800	3AXD50000826018	1
ACS880-204LC-0450A-7	E4.2V-A 800	3AXD50000826018	1
ACS880-204LC-0480A-7	E4.2V-A 800	3AXD50000826018	1
ACS880-204LC-0560A-7	E4.2V-A 800	3AXD50000826018	1
ACS880-204LC-0620A-7	E4.2V-A 800	3AXD50000826018	1
ACS880-204LC-0700A-7	E4.2V-A 1600	3AXD50000826025	1
ACS880-204LC-0770A-7	E4.2V-A 1600	3AXD50000826025	1
ACS880-204LC-0930A-7	E4.2V-A 1600	3AXD50000826025	1
ACS880-204LC-1090A-7	E4.2V-A 1600	3AXD50000826025	1
ACS880-204LC-1180A-7	E4.2V-A 1600	3AXD50000826025	1
ACS880-204LC-1360A-7	E4.2V-A 2000	3AXD50000828128	1
ACS880-204LC-1500A-7	E4.2V-A 2000	3AXD50000828128	1
ACS880-204LC-1800A-7	E4.2V-A 2500	3AXD50000826049	1
ACS880-204LC-2020A-7	E4.2V-A 2500	3AXD50000826049	1
ACS880-204LC-2220A-7	E4.2V-A 2500	3AXD50000826049	1
ACS880-204LC-2670A-7	E4.2V-A 2000	3AXD50000828128	2
ACS880-204LC-2930A-7	E4.2V-A 2000	3AXD50000828128	2

Content of the 230 V air circuit breakers:

• Ekip Dip LI 3p WMP	1SDA077648R1 (E2.2S-A 1200) 1SDA077658R1 (E2.2S-A 1600) 1SDA077668R1 (E2.2S-A 2000) 1SDA078458R1 (E4.2S-A 2500) 1SDA072501R1 (E4.2S 3200) 1SDA079138R1 (E6.2V-A 5000)
• YO E1.2..E6.2 220-240 Vac/dc	1SDA073674R1
• YC E1.2..E6.2 220-240 Vac/dc	1SDA073687R1
• YU E1.2..E6.2 220-240 Vac/dc	1SDA073700R1
• M E2.2..E6.2 220-250 Vac/dc	1SDA073725R1
• MOC E2.2..E6.2	1SDA073781R1
• AUX 6Q 400V E2.2..E6.2	1SDA073756R1
• KLC-S Key lock open N.20005 E2.2..E6.2	1SDA073792R1
• KLP-S Key lock racked in/out N.20005 E2.2...E6.2 1st key	1SDA073807R1
• TRIPLE CERTIFIC: UL/IEC/CCC *	1SDA083022R1 (E2.2S), 1SDA083025R1 (E4.2S), 1SDA083028R1 (E6.2V)

* = Certificate not included in E4.2S 3200.

For adapting E2.2S-A, E4.2S-A and E6.2V-A air circuit breakers to IEC bus bars, use bus bar shim kit. See IEC busbar shim kits (page 267).

IGBT supply unit	Wagons (IEC)		
Type	Type	Ordering code	Qty
U_N = 690 V			
ACS880-204LC-0360A-7	E2.2-A W FP 2000	3AXD50000048354	1
ACS880-204LC-0400A-7	E2.2-A W FP 2000	3AXD50000048354	1
ACS880-204LC-0450A-7	E2.2-A W FP 2000	3AXD50000048354	1
ACS880-204LC-0480A-7	E2.2-A W FP 2000	3AXD50000048354	1
ACS880-204LC-0560A-7	E2.2-A W FP 2000	3AXD50000048354	1
ACS880-204LC-0620A-7	E2.2-A W FP 2000	3AXD50000048354	1
ACS880-204LC-0700A-7	E2.2-A W FP 2000	3AXD50000048354	1
ACS880-204LC-0770A-7	E2.2-A W FP 2000	3AXD50000048354	1
ACS880-204LC-0930A-7	E2.2-A W FP 2000	3AXD50000048354	1
ACS880-204LC-1090A-7	E2.2-A W FP 2000	3AXD50000048354	1
ACS880-204LC-1180A-7	E2.2-A W FP 2000	3AXD50000048354	1
ACS880-204LC-1360A-7	E2.2-A W FP 2000	3AXD50000048354	1
ACS880-204LC-1500A-7	E2.2-A W FP 2000	3AXD50000048354	1
ACS880-204LC-1800A-7	E4.2-A W FP 2500	3AXD50000039281	1
ACS880-204LC-2020A-7	E4.2-A W FP 2500	3AXD50000039281	1
ACS880-204LC-2220A-7	E4.2 W FP 3200	3AXD50000048356	1
ACS880-204LC-2670A-7	E4.2 W FP 4000	3AXD50000189588	1
ACS880-204LC-2930A-7	E4.2 W FP 4000	3AXD50000189588	1

Content of the 115 V and 230 V wagons:

- W FP Iu=2000 3p HR HR UL / W FP Iu=2500 3p HR HR UL / WAGON W FP Iu=5000 HR HR UL — 1SDA079698R1 (E2.2-A W FP 2000) / 1SDA079700R1 (E4.2-A W FP 2500) / 1SDA079706R1 (E6.2-A W FP 5000)
- AUP 5 contacts 400V E2.2...E6.2 - left set — 1SDA080373R1

The exception is E4.2_W_FP_3200_HR-HR_IEC:

- W FP Iu=3200 HR HR, IEC — 1SDA073913R1 (E4.2 W FP 3200)
- AUP 5 contacts 400V E2.2...E6.2, IEC — 1SDA073764R1

For adapting E2.2S-A, E4.2S-A and E6.2V-A air circuit breakers to IEC bus bars, use bus bar shim kit. See IEC busbar shim kits (page 267).

IGBT supply unit	Main circuit breakers (115 V, IEC)		
Type	Type	Ordering code	Qty
U_N = 690 V			
ACS880-204LC-0360A-7	E2.2S-A800	3AXD50000445936	1
ACS880-204LC-0400A-7	E2.2S-A800	3AXD50000445936	1
ACS880-204LC-0450A-7	E2.2S-A800	3AXD50000445936	1
ACS880-204LC-0480A-7	E2.2S-A800	3AXD50000445936	1
ACS880-204LC-0560A-7	E2.2S-A800	3AXD50000445936	1
ACS880-204LC-0620A-7	E2.2S-A800	3AXD50000445936	1
ACS880-204LC-0700A-7	E2.2S-A1200	3AXD50000048351	1
ACS880-204LC-0770A-7	E2.2S-A1200	3AXD50000048351	1
ACS880-204LC-0930A-7	E2.2S-A1200	3AXD50000048351	1
ACS880-204LC-1090A-7	E2.2S-A1600	3AXD50000048329	1
ACS880-204LC-1180A-7	E2.2S-A1600	3AXD50000048329	1
ACS880-204LC-1360A-7	E2.2S-A2000	3AXD50000048342	1
ACS880-204LC-1500A-7	E2.2S-A2000	3AXD50000048342	1
ACS880-204LC-1800A-7	E4.2S-A2500	3AXD50000048345	1
ACS880-204LC-2020A-7	E4.2S-A2500	3AXD50000048345	1
ACS880-204LC-2220A-7	E4.2S 3200	3AXD50000048341	1
ACS880-204LC-2670A-7	E4.2V 4000	3AXD50000231980	1
ACS880-204LC-2930A-7	E4.2V 4000	3AXD50000231980	1

IGBT supply unit	Main circuit breakers (115 V, UL)		
Type	Type	Ordering code	Qty
U_N = 690 V			
ACS880-204LC-0360A-7	E4.2V-A 800	3AXD50000826148	1
ACS880-204LC-0400A-7	E4.2V-A 800	3AXD50000826148	1
ACS880-204LC-0450A-7	E4.2V-A 800	3AXD50000826148	1
ACS880-204LC-0480A-7	E4.2V-A 800	3AXD50000826148	1
ACS880-204LC-0560A-7	E4.2V-A 800	3AXD50000826148	1
ACS880-204LC-0620A-7	E4.2V-A 800	3AXD50000826148	1
ACS880-204LC-0700A-7	E4.2V-A 1600	3AXD50000826155	1
ACS880-204LC-0770A-7	E4.2V-A 1600	3AXD50000826155	1
ACS880-204LC-0930A-7	E4.2V-A 1600	3AXD50000826155	1
ACS880-204LC-1090A-7	E4.2V-A 1600	3AXD50000826155	1
ACS880-204LC-1180A-7	E4.2V-A 1600	3AXD50000826155	1
ACS880-204LC-1360A-7	E4.2V-A 2000	3AXD50000826162	1
ACS880-204LC-1500A-7	E4.2V-A 2000	3AXD50000826162	1
ACS880-204LC-1800A-7	E4.2V-A 2500	3AXD50000826179	1
ACS880-204LC-2020A-7	E4.2V-A 2500	3AXD50000826179	1
ACS880-204LC-2220A-7	E4.2V-A 2500	3AXD50000826179	1
ACS880-204LC-2670A-7	E4.2V-A 2000	3AXD50000826162	2
ACS880-204LC-2930A-7	E4.2V-A 2000	3AXD50000826162	2

Content of the 115 V air circuit breakers:

- Ekip Dip LI 3p WMP — 1SDA077648R1 (E2.2S-A 1200)
1SDA077658R1 (E2.2S-A 1600)
1SDA077668R1 (E2.2S-A 2000)
1SDA078458R1 (E4.2S-A 2500)
1SDA072501R1 (E4.2S 3200)
1SDA079138R1 (E6.2V-A 5000)
- YO E1.2..E6.2 110-120 Vac/dc — 1SDA073672R1
- YC E1.2..E6.2 110-120 Vac/dc — 1SDA073685R1
- YU E1.2..E6.2 110-120 Vac/dc — 1SDA073698R1
- M E2.2...E6.2 100-130 Vac/dc — 1SDA073724R1
- MOC E2.2..E6.2 — 1SDA073781R1
- AUX 6Q 400V E2.2..E6.2 — 1SDA073756R1
- KLC-S Key lock open N.20005 E2.2..E6.2 — 1SDA073792R1
- KLP-S Key lock racked in/out N.20005 E2.2...E6.2 1st key — 1SDA073807R1
- TRIPLE CERTIFIC: UL/IEC/CCC * — 1SDA083022R1 (E2.2S),
1SDA083025R1 (E4.2S),
1SDA083028R1 (E6.2V)

* = Certificate not included in E4.2S 3200.

For adapting E2.2S-A, E4.2S-A and E6.2V-A air circuit breakers to IEC bus bars, use bus bar shim kit. See IEC busbar shim kits (page 267).

Content of the 115 V wagons:

- W FP Iu=2000 3p HR HR UL /
W FP Iu=2500 3p HR HR UL /
WAGON W FP Iu=5000 HR HR UL — 1SDA079698R1 (E2.2-A W FP 2000)
1SDA079700R1 (E4.2-A W FP 2500)
1SDA079706R1 (E6.2-A W FP 5000)
- AUP 5 contacts 400V E2.2...E6.2 - left set — 1SDA080373R1

The exception is E4.2_W_FP_3200_HR-HR_IEC:

- W FP Iu=3200 HR HR, IEC — 1SDA073913R1 (E4.2 W FP 3200)
- AUP 5 contacts 400V E2.2...E6.2, IEC — 1SDA073764R1

For adapting E2.2S-A, E4.2S-A and E6.2V-A air circuit breakers to IEC bus bars, use bus bar shim kit. See IEC busbar shim kits (page 267).

Frame size	Wagons (UL)		
	Type	Ordering code	Qty
1×R8i … 3×R8i	E4.2-A W FP 2500	3AXD50000039281	1
4×R8i	E4.2-A W FP 2500	3AXD50000039281	2

IEC busbar shim kits

The following shim kits are available for adapting E2.2S-A and E4.2S-A main circuit breakers to IEC busbars.

Type	Data	Ordering code	Illustration
E2.2S-A	EMAX2 E2.2 busbar shim kit	3AXD50000286324	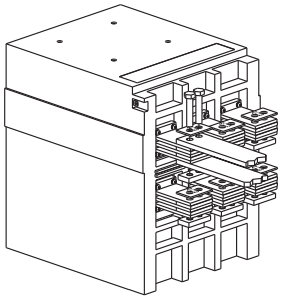 Instruction code: 3AXD50000286072
E4.2S-A	EMAX2 E4.2 busbar shim kit	3AXD50000286782	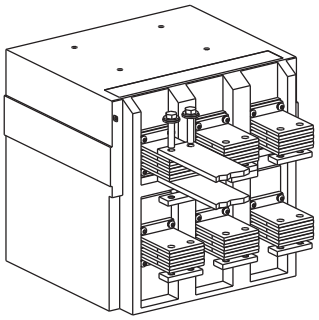 Instruction code: 3AXD50000286973

Main circuit breaker and wagon cover

One cover is needed for each main circuit breaker/wagon pair. See Drive modules cabinet design and construction instructions (3AUA0000107668 [English]) for further details regarding arc protection.

IEC: IP54 flange, key N.20005 E2.2…E6.2, 1SDA073869R1, ordering code: 3AXD50000049760

UL: Hinged Window, APWK2016H, ordering code 3AUA0000222786

AC fuses

The AC fuses protect the input cables and the module against short circuits.

IGBT supply unit	AC fuses				
Type	Type	A	V	Ordering code	Qty
U_N = 690 V					
ACS880-204LC-0360A-7	170M6410	630	690	68335418	3
ACS880-204LC-0400A-7	170M6411	700	690	3AXD50000000175	3
ACS880-204LC-0450A-7	170M6412	800	690	68731640	3
ACS880-204LC-0480A-7	170M6412	800	690	68731640	3
ACS880-204LC-0560A-7	170M6413	900	690	3AXD50000000148	3
ACS880-204LC-0620A-7	170M6414	1000	690	68333296	3
ACS880-204LC-0700A-7	170M6416	1250	690	68244463	3
ACS880-204LC-0770A-7	170M6417	1400	690	3AXD50000000150	3
ACS880-204LC-0930A-7	170M7061	1600	690	3AUA0000220709	3
ACS880-204LC-1090A-7	170M7062	2000	690	68689589	3
ACS880-204LC-1180A-7	170M7062	2000	690	68689589	3
ACS880-204LC-1360A-7	170M7063	2500	690	68752591	3
ACS880-204LC-1500A-7	170M7063	2500	690	68752591	3
ACS880-204LC-1800A-7	170M7061	1600	690	3AUA0000220709	6
ACS880-204LC-2020A-7	170M7062	2000	690	68689589	6
ACS880-204LC-2220A-7	170M7062	2000	690	68689589	6
ACS880-204LC-2670A-7	170M7063	2500	690	68752591	6
ACS880-204LC-2930A-7	170M7063	2500	690	68752591	6

AC-DC charging kits for line-up charging

The capacitor bank of the IGBT supply module needs to be charged during the start-up before connecting the module to a three-phase power line. The charging kit contains the main parts of the charging circuit.

Note: The charging components are dimensioned for DC link capacitances equal to 3 × IGBT supply unit DC capacitance (1×ISU + 2×INU), 5 × IGBT supply unit DC capacitance (1×ISU + 4×INU) and 7 × IGBT supply unit DC capacitance (1×ISU + 6×INU). For example, 1×ISU + 2×INU means that there is one ISU with two INUs with the same capacitance. There can be more INUs as long as the capacitance limit is not exceeded. If the total DC link capacitance (including IGBT supply and inverter module DC capacitances) exceeds these limits, the components must be redimensioned. Contact ABB representative for more information. The capacitances of the IGBT supply module types and the inverter module types are specified in their technical data tables. The maximum allowed number of charging cycles of the DC capacitors (ie, power-ups by applying power) is two in five minutes.

The following table shows the charging kits available for each module type.

ACS880-204LC-...	2×INU		4×INU		6×INU	
	Ordering code (IEC)	Max. capa-citance (mF)	Ordering code (IEC)	Max. capa-citance (mF)	Ordering code (IEC)	Max. capa-citance (mF)
U_N = 690 V						
0360A-7	3AXD50000250776	18	3AXD50000250776	30	3AXD50000250783	42
0400A-7	3AXD50000250776	18	3AXD50000250776	30	3AXD50000250783	42
0450A-7	3AXD50000250776	18	3AXD50000250776	30	3AXD50000250783	42
0480A-7	3AXD50000250776	18	3AXD50000250776	30	3AXD50000250783	42
0560A-7	3AXD50000250776	27	3AXD50000250783	45	3AXD50000250783	63
0620A-7	3AXD50000250776	27	3AXD50000250783	45	3AXD50000250783	63
0700A-7	3AXD50000250776	27	3AXD50000250783	45	3AXD50000250783	63
0770A-7	3AXD50000250776	27	3AXD50000250783	45	3AXD50000250783	63
0930A-7	3AXD50000250776	36	3AXD50000250783	60	3AXD50000250783	84
1090A-7	3AXD50000250783	54	3AXD50000250783	90	3AXD50000250790	126
1180A-7	3AXD50000250783	54	3AXD50000250783	90	3AXD50000250790	126
1360A-7	3AXD50000250783	54	3AXD50000250783	90	3AXD50000250790	126
1500A-7	3AXD50000250783	54	3AXD50000250783	90	3AXD50000250790	126
1800A-7	3AXD50000250783	81	3AXD50000250790	135	3AXD50000250806	189
2020A-7	3AXD50000250783	81	3AXD50000250790	135	3AXD50000250806	189
2220A-7	3AXD50000250783	81	3AXD50000250790	135	3AXD50000250806	189
2670A-7	3AXD50000250790	108	3AXD50000250806	180	3AXD50000251216	252
2930A-7	3AXD50000250790	108	3AXD50000250806	180	3AXD50000251216	252

ACS880-204LC-...	2×INU		4×INU		6×INU	
	Ordering code (UL)	Max. capa-citance (mF)	Ordering code (UL)	Max. capa-citance (mF)	Ordering code (UL)	Max. capa-citance (mF)
U_N = 690 V						
0360A-7	3AXD50000686308	18	3AXD50000686308	30	3AXD50000686612	42
0400A-7	3AXD50000686308	18	3AXD50000686308	30	3AXD50000686612	42
0450A-7	3AXD50000686308	18	3AXD50000686308	30	3AXD50000686612	42
0480A-7	3AXD50000686308	18	3AXD50000686308	30	3AXD50000686612	42
0560A-7	3AXD50000686308	27	3AXD50000686612	45	3AXD50000686612	63
0620A-7	3AXD50000686308	27	3AXD50000686612	45	3AXD50000686612	63
0700A-7	3AXD50000686308	27	3AXD50000686612	45	3AXD50000686612	63
0770A-7	3AXD50000686308	27	3AXD50000686612	45	3AXD50000686612	63
0930A-7	3AXD50000686308	36	3AXD50000686612	60	3AXD50000686612	84
1090A-7	3AXD50000686612	54	3AXD50000686612	90	3AXD50000686629	126
1180A-7	3AXD50000686612	54	3AXD50000686612	90	3AXD50000686629	126
1360A-7	3AXD50000686612	54	3AXD50000686612	90	3AXD50000686629	126
1500A-7	3AXD50000686612	54	3AXD50000686612	90	3AXD50000686629	126
1800A-7	3AXD50000686612	81	3AXD50000686629	135	3AXD50000686636	189
2020A-7	3AXD50000686612	81	3AXD50000686629	135	3AXD50000686636	189
2220A-7	3AXD50000686612	81	3AXD50000686629	135	3AXD50000686636	189
2670A-7	3AXD50000686629	108	3AXD50000686636	180	3AXD50000686643	252
2930A-7	3AXD50000686629	108	3AXD50000686636	180	3AXD50000686643	252

For charging kit contents, see the technical data.

AC busbars for LCL filters

Used with ...	Qty	Ordering code	Kit code	Illustration
BLCL-15LC-7 (600 mm Rittal VX25 enclosure)	1	3AXD50000237470	L-6-8-108	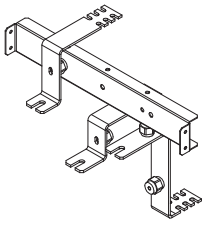 Instruction code: 3AXD50000248476
BLCL-24LC-7 (600 mm Rittal VX25 enclosure)	1	3AXD50000237487	L-6-8-109	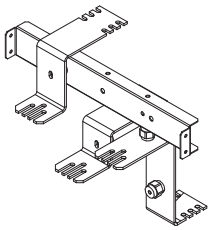 Instruction code: 3AXD50000249206

Used with ...	Qty	Ordering code	Kit code	Illustration
BLCL-25LC-7 (600 mm Rittal VX25 enclosure)	1	3AXD50000237494	L-6-8-110	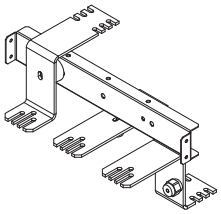 Instruction code: 3AXD50000249534
BLCL-15LC-7, BLCL-24LC-7and BLCL-25LC-7 (600 mm Rittal VX25 enclosure)	1	3AXD50000237371	L-6-X-012	Instruction code: 3AXD50000245987

LCL fuse busbars

Used with ...	Qty	Ordering code	Kit code	Illustration
BLCL-15LC-7 (600 mm Rittal VX25 or generic enclosure)	1	3AXD50000426669	L-6-8-103-VX	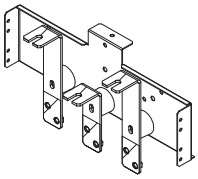 Instruction code: 3AXD50000431601
BLCL-24LC-7 (600 mm Rittal VX25 or generic enclosure)	1	3AXD50000426676	L-6-8-104-VX	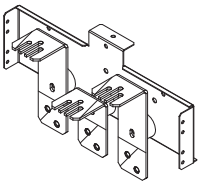 Instruction code: 3AXD50000431403
BLCL-25LC-7 (600 mm Rittal VX25 or generic enclosure)	1	3AXD50000426683	L-6-8-105-VX	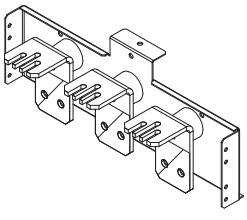 Instruction code: 3AXD50000431724

LCL choke busbars

Used with ...	Qty	Ordering code	Kit code	Illustration
BLCL-15LC-7 and BLCL-24LC-7 (600 mm Rittal VX25 or generic enclosure)	1	3AXD50000237418	L-6-8-106	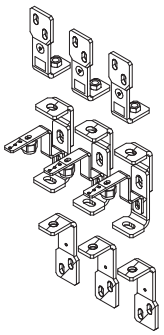 Instruction code: 3AXD50000247097
BLCL-25LC-7 (600 mm Rittal VX25 or generic enclosure)	1	3AXD50000237425	L-6-8-107	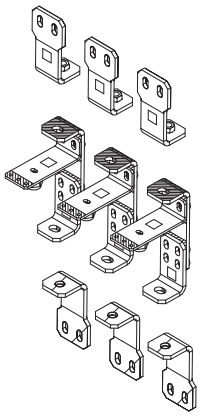 Instruction code: 3AXD50000247080
BLCL-15LC-7 and BLCL-24LC-7 (600 mm Rittal VX25 or generic enclosure)	1	3AXD50000237517	L-6-8-311	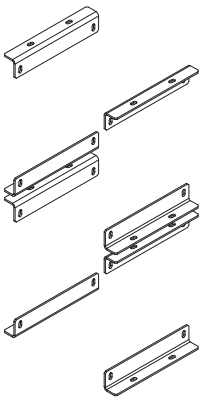 Instruction code: 3AXD50000249893

LCL choke installation kits

Used with ...	Qty	Ordering code	Kit code	Illustration
BLCL-15LC-7 and BLCL-24LC-7 (600 mm Rittal VX25 or generic enclosure)	1	3AXD50000426195	L-6-8-306-VX	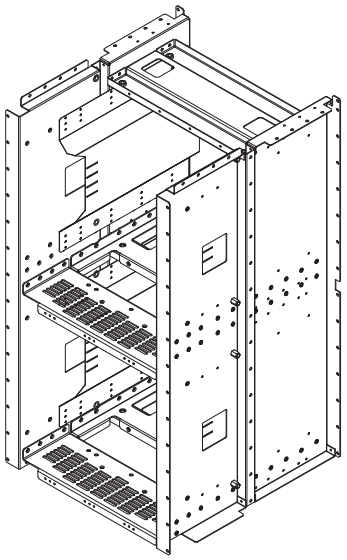 Instruction code: 3AXD50000431915
BLCL-25LC-7 (600 mm Rittal VX25 or generic enclosure)	1	3AXD50000426201	L-6-8-307-VX	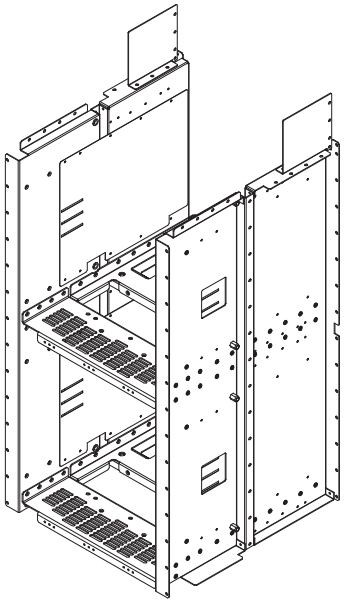 Instruction code: 3AXD50000431816

LCL capacitor installation kits

Used with ...	Qty	Ordering code	Kit code	Illustration
BLCL-15LC-7 (600 mm Rittal VX25 or generic enclosure)	1	3AXD50000237319	L-6-8-308	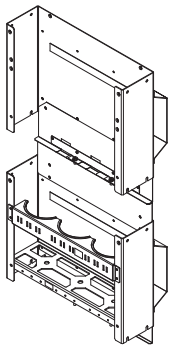 Instruction code: 3AXD50000244065
BLCL-24LC-7 (600 mm Rittal VX25 or generic enclosure)	1	3AXD50000237333	L-6-8-309	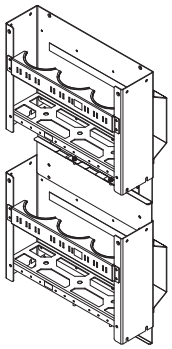 Instruction code: 3AXD50000244065
BLCL-25LC-7 (600 mm Rittal VX25 or generic enclosure)	1	3AXD50000237340	L-6-8-310	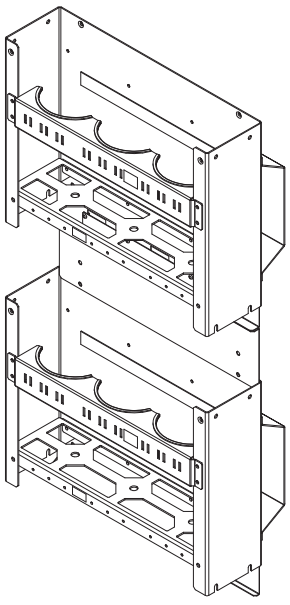 Instruction code: 3AXD50000244065

LCL ISU connection kits

Used with ...	Qty	Ordering code	Kit code	Illustration
BLCL-15LC-7 and BLCL-24LC-7 (600 mm Rittal VX25 enclosure)	1	3AXD50000426690	L-6-8-101-VX	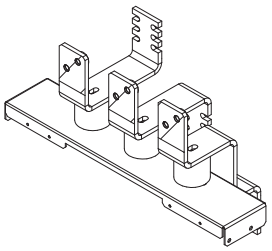 Instruction code: 3AXD50000431717
BLCL-25LC-7 (600 mm Rittal VX25 enclosure)	1	3AXD50000426706	L-6-8-102-VX	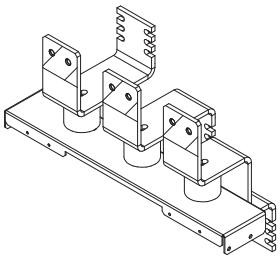 Instruction code: 3AXD50000431502
BLCL-15LC-7, BLCL-24LC-7 and BLCL-25LC-7 (600 mm Rittal VX25 enclosure)	1	3AXD50000371013	L-6-X-012-VX	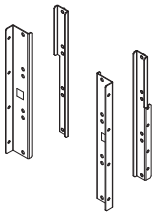 Instruction code: 3AXD50000370870

AC busbars

The power input of the supply module is connected to the module through a quick connector.

Used with ...	Qty	Ordering code	Kit code	Illustration
400/600/800 mm Rittal VX25 enclosure	1 / module	3AXD50000371037	L-468-8-121-VX	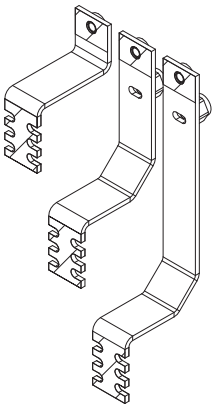 Instruction code: 3AXD50000352791

Quick connector

The power input is connected to the module through a quick connector.

Used with	Qty	Ordering code	Kit code	Illustration
All enclosure types	1 per module	3AUA0000119227	A-468-8-100	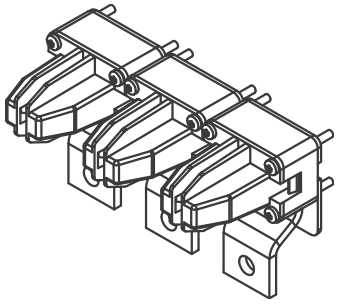 Instruction code: 3AUA0000118667

DC-side components

DC bus installation parts (for Rittal VX25 enclosures)

The brackets in this kit act as a mounting base for the busbar supports of the Rittal Flat-PLS DC bus and ensure its correct placement and alignment inside the cabinet line-up.

Note: The designs presented in this manual for Rittal VX25 enclosures employ the Rittal Flat-PLS busbar system. Make sure that the current carrying capability of the busbars is not exceeded at any point of the drive system.

Used with ...	Qty	Ordering code	Kit code	Illustration
400/600/800 mm Rittal VX25 enclosure	1 kit per cubicle	3AXD50000333387	A-468-X-001-VX	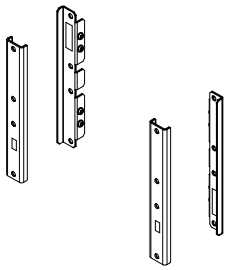 Instruction code: 3AXD50000333639

DC connection parts 1 of 2 (for Rittal VX25 enclosures)

These parts connect the Flat-PLS busbars to the DC fuses.

Used with...	Qty	Ordering code	Kit code	Illustration
400 mm Rittal VX25 enclosure	1	3AXD50000360604	L-4-8-201-VX	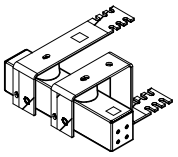 Instruction code: 3AXD50000332861
	1	3AXD50000361021	L-4-8-251-VX	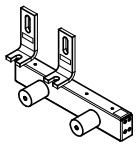 Instruction code: 3AXD50000332885
600 mm Rittal VX25 enclosure	1	3AXD50000361106	L-6-8-202-VX	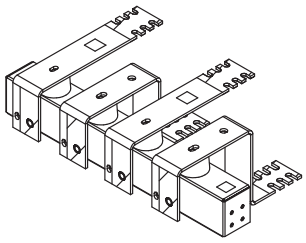 Instruction code: 3AXD50000332229
	1	3AXD50000361229	L-6-8-252-VX	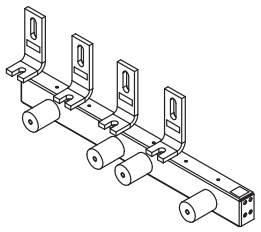 Instruction code: 3AXD50000332106

Used with...	Qty	Ordering code	Kit code	Illustration
800 mm Rittal VX25 enclosure	1	3AXD50000361281	L-8-8-203-VX	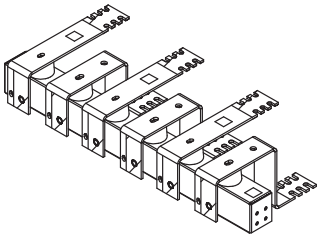 Instruction code: 3AXD50000331567
	1	3AXD50000361298	L-8-8-253-VX	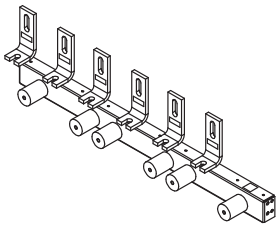 Instruction code: 3AXD50000331765

DC connection parts 1 of 2 (for generic enclosures)

These parts provide the DC connection between the DC output (busbars or otherwise) and the DC fuses.

Used with...	Qty	Ordering code	Kit code	Illustration
400 mm generic enclosure without DC switch	1	3AXD50000540150	L-3-8-259	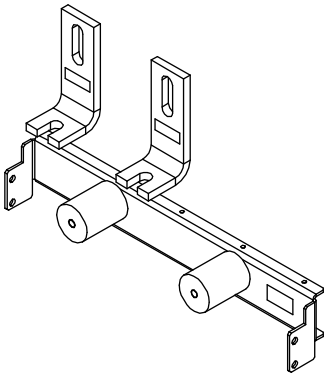 Instruction code: 3AXD50000540655

Used with...	Qty	Ordering code	Kit code	Illustration
400 mm generic enclosure with DC switch	1	3AXD50000361038	L-4-8-254-VX	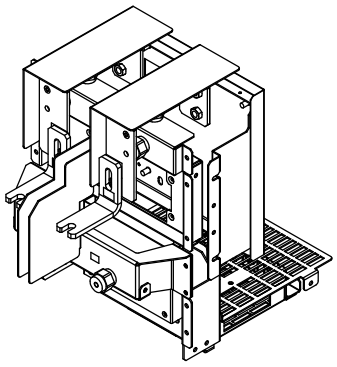 Instruction code: 3AXD50000342600
600 mm generic enclosure without DC switch	1	3AXD50000540167	L-5-8-260	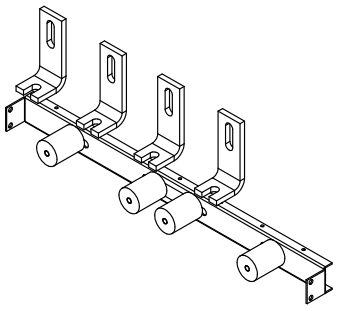 Instruction code: 3AXD50000540723
600 mm generic enclosure with DC switch	1	3AXD50000361243	L-6-8-255-VX	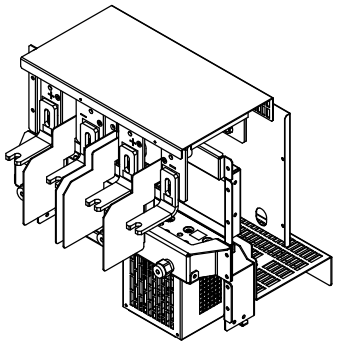 Instruction code: 3AXD50000338740
800 mm generic enclosure without DC switch	1	3AXD50000540174	L-7-8-261	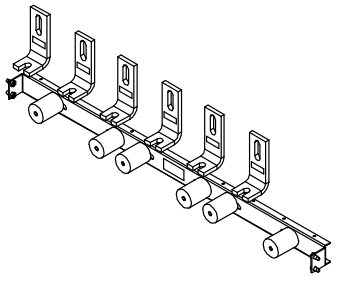 Instruction code: 3AXD50000540693

Used with...	Qty	Ordering code	Kit code	Illustration
800 mm generic enclosure with DC switch **Note:** 3×R8i design with DC switches is not suitable for UL installations.	1	3AXD50000361304	L-8-8-256-VX	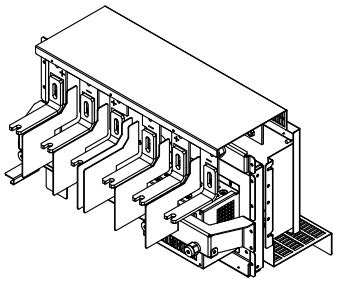 Instruction code: 3AXD50000336999

DC fuses

DC fuses protect the module and drive DC bus against short circuits.

IGBT supply unit	DC fuses			
Type	**Type**	**Rating [A]**	**Ordering code**	**Qty**
U_N = 690 V				
ACS880-204LC-0360A-7	170M6546	800	63919128	2
ACS880-204LC-0400A-7	170M6546	800	63919128	2
ACS880-204LC-0450A-7	170M6547	900	63919381	2
ACS880-204LC-0480A-7	170M6548	1000	63916749	2
ACS880-204LC-0560A-7	170M6549	1100	68736021	2
ACS880-204LC-0620A-7	170M6500	1250	63919462	2
ACS880-204LC-0700A-7	170M6501	1400	3AUA0000086673	2
ACS880-204LC-0770A-7	170M6501	1400	3AUA0000086673	2
ACS880-204LC-0930A-7	170M6548	1000	63916749	4
ACS880-204LC-1090A-7	170M6549	1100	68736021	4
ACS880-204LC-1180A-7	170M6500	1250	63919462	4
ACS880-204LC-1360A-7	170M6501	1400	3AUA0000086673	4
ACS880-204LC-1500A-7	170M6501	1400	3AUA0000086673	4
ACS880-204LC-1800A-7	170M6500	1250	63919462	6
ACS880-204LC-2020A-7	170M6501	1400	3AUA0000086673	6
ACS880-204LC-2220A-7	170M6501	1400	3AUA0000086673	6
ACS880-204LC-2670A-7	170M6501	1400	3AUA0000086673	8
ACS880-204LC-2930A-7	170M6501	1400	3AUA0000086673	8

DC switch-disconnector kits for unit charging

For further information on using the kits, see section Supply unit control devices (page 36).

Used with...	DC switch-disconnector kits for unit charging (IEC)			
	Switch type Handle type	Qty	Ordering code	Instruction code
Frame R8i with DC switch-disconnector	OT1600E11 OHB150J12P	1	3AXD50000227037	3AXD50000330720
Frame 2×R8i with DC switch-disconnector	OT1600E22 OHB274J12	1	3AXD50000227044	
Frame 3×R8i with DC switch-disconnector	OT2500E22 OHB274J12	1	3AXD50000227051	

The kit contains the following components:

- DC switch (type indicated in table)
- Operating handle (type indicated in table)
- OXP12X395 operating shaft
- OA1G10 and OA3G01 auxiliary contacts
- OTZT4A and PDAL2/24DC interlocks
- OHZX10 alignment ring.

Used with...	DC switch-disconnector kits for unit charging (UL)			
	Switch type Handle type	Qty	Ordering code	Instruction code
Frame R8i with DC switch-disconnector	OT1200U11 OHB150J12P	1	3AXD50000227068	3AXD50000330720
Frame 2×R8i with DC switch-disconnector	OT1200U22 OHB274J12	1	3AXD50000227075	

DC charging kits for unit charging (for units with DC switch-disconnector)

Used with...	DC charging kits for unit charging (IEC)			
	Switch type	Qty	Ordering code	Instruction code
Frames R8i and 2×R8i with DC switch-disconnector	OS160GD04F	1	3AXD50000226801	3AXD50000450978
Frame 3×R8i with DC switch-disconnector	OS200DZ22F	1	3AXD50000227020	

The kit contains the following components:

- Charging switch (type indicated in table) with terminal shrouds
- OHB65J6 operating handle
- OXP6X290 operating shaft
- 2 pcs of OA3G01 auxiliary contacts
- BSFC-12C charging controller
- 170M2676 fuses
- OHZX10 alignment ring.

Used with...	DC charging kits for unit charging (UL)			
	Switch type	Qty	Ordering code	Instruction code
Frames R8i and 2×R8i with DC switch-disconnector	OS100GJ04F	1	3AXD50000227013	3AXD50000450978

The kit contains the following components:

- Charging switch (type indicated in table) with terminal shrouds and support
- OXP6X290 operating shaft
- OHB65J6 operating handle
- Combi screws M4×8
- 2 pcs of OA3G01 auxiliary contacts
- BSFC-12C charging controller
- FWJ 30A fuses and fuse clips
- OHZX10 alignment ring.

Note: Charging resistors are not included in the kit and must be ordered separately.

Charging resistors for unit charging (for units with DC switch-disconnector)

Used with...	Qty (IEC)	Qty (UL)	Ordering code (IEC/UL)	Data
Frame R8i with DC switch-disconnector	4	4	10028531	33 ohm
Frame 2×R8i with DC switch-disconnector	6	6		
Frame 3×R8i with DC switch-disconnector	8	10		
Frame 4×R8i with DC switch-disconnector	12	12		

DC switch-disconnector for line-up charging

Load break switch is needed when the delivery contains both line-up charging and unit charging. For further information on using the kits, see section Supply unit control devices (page 36).

Used with...	DC switch-disconnector for line-up charging (IEC)				
	Type	Rating	Qty	Ordering code	Instruction code
Frame R8i	OT630E11 kit	630 A, 1000 V	1	3AXD50000507078	3AXD50000660582
Frame 2×R8i					
Frame 3×R8i					
Frame 4×R8i					

Used with...	DC switch-disconnector for line-up charging (UL)			
	Type	Qty	Ordering code	Instruction code
Frame R8i	OT630U11	1	3AXD50000686674	3AXD50000660582
Frame 2×R8i				
Frame 3×R8i				
Frame 4×R8i				

The kits above contain the following components:

- OXP12X250 operating shaft
- OHB150J12P operating handle
- OA1G10 auxiliary contact
- OHZX10 alignment ring.

DC connection parts 2 of 2

These parts connect the DC fuses to the module.

Used with ...	Qty	Ordering code	Kit code	Illustration
All enclosure types	1 / module	3AXD50000041264	L-468-8-230	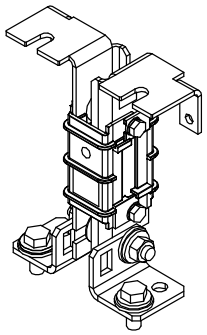 Instruction code: 3AXD50000041311 **Note:** Filters to be ordered separately.

Flat-PLS busbars (common DC) for LCL filters

Used with ...	Qty	Ordering code	Kit code	Illustration
BLCL-15LC-7, BLCL-24LC-7and BLCL-25LC-7 (600 mm Rittal VX25 enclosure)	1	3AXD50000333387	A-468-X-001-VX	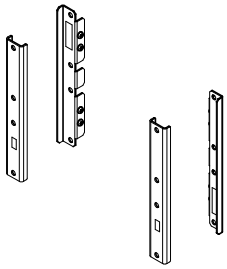 Instruction code: 3AXD50000333639

Charging mechanics

Used with ...	Qty	Ordering code	Kit code	Illustration
400 mm Rittal VX25 enclosure	1	3AXD50000361038	L-4-8-254-VX	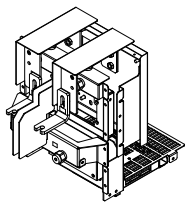 Instruction code: 3AXD50000342600
600 mm Rittal VX25 enclosure	1	3AXD50000361243	L-6-8-255-VX	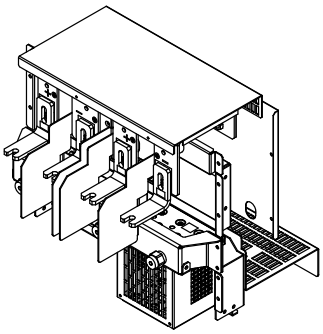 Instruction code: 3AXD50000338740
800 mm Rittal VX25 enclosure	1	3AXD50000361304	L-8-8-256-VX	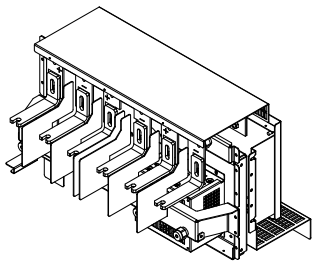 Instruction code: 3AXD50000336999

DC connection charging mechanics

Used with ...	Qty	Ordering code	Kit code	Illustration
400 mm and 600 mm Rittal VX25 enclosures	1 / module	3AXD50000360567	L-46-8-207-VX	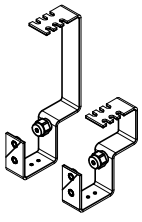 Instruction code: 3AXD50000343614
800 mm Rittal VX25 enclosure	1	3AXD50000360574	L-8-8-208-VX	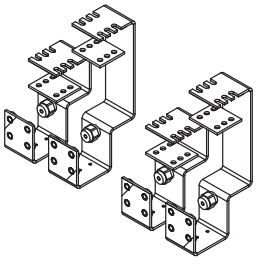 Instruction code: 3AXD50000344185

Common mode filter busbars

Used with ...	Qty	Ordering code	Kit code	Illustration
400 mm and 600 mm Rittal VX25 and generic enclosures	1 / module	3AXD50000200368	L-46-8-233	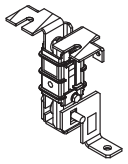 Instruction code: 3AXD50000205042
800 mm Rittal VX25 and generic enclosures	1 / module	3AXD50000200337	L-8-8-234	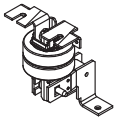 Instruction code: 3AXD50000205226 **Note:** Filters to be ordered separately.

Common mode filters

Common mode filtering reduces bearing currents and is required for electromagnetic compatibility (EMC). The filtering is implemented by installing two toroidal cores onto the DC busbars.

Used with	Qty	Ordering code	Kit code	Illustration
All enclosure types	2 per module	3AXD50000566785	-	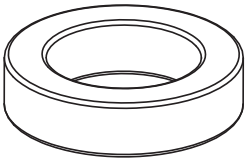

Cooling system parts for supply modules

Coolant distribution manifold kits

Enclosure	Qty	Ordering code	Kit code	Illustration
400/600/800mm VX25 and generic enclosure (1 module)	1	3AXD50000044084	L-468-8-441	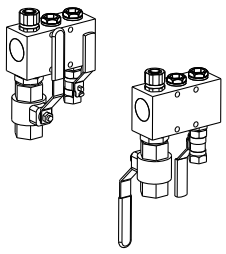 Instruction code: 3AXD50000048217

Enclosure	Qty	Ordering code	Kit code	Illustration
400/600/800mm VX25 and generic enclosure (2 modules)	1	3AXD50000044182	L-468-8-442	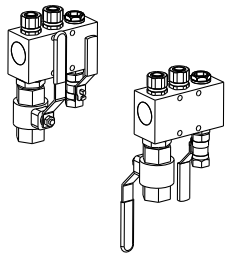 Instruction code: 3AXD50000048258
400/600/800mm VX25 and generic enclosure (3 modules)	1	3AXD50000048136	L-468-8-443	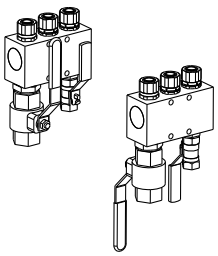 Instruction code: 3AXD50000048283

The manifold kits contain:

Inlet and outlet manifolds

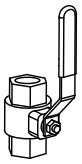 Inlet and outlet valves

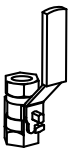 Drain valves

Nipples for connecting the valves to manifolds

Connectors for PA piping

Plugs for unused piping connectors

Chokes for flow limitation – not used with the ACS880-204LC.

You must order the following parts separately as they are not included in the manifold kits:

- Connectors to attach to inlet, outlet and drain valves
- Connectors to attach to main pipes
- Pipes between main pipe and inlet/outlet valves

- Main pipes
- Drain pipes.

Note: The inlet and outlet valves have an R3/4" internal thread. The drain valves have an R3/8" internal thread.

Piping

PA (polyamide) pipe is available in various diameters on reels. Refer to the figure for application.

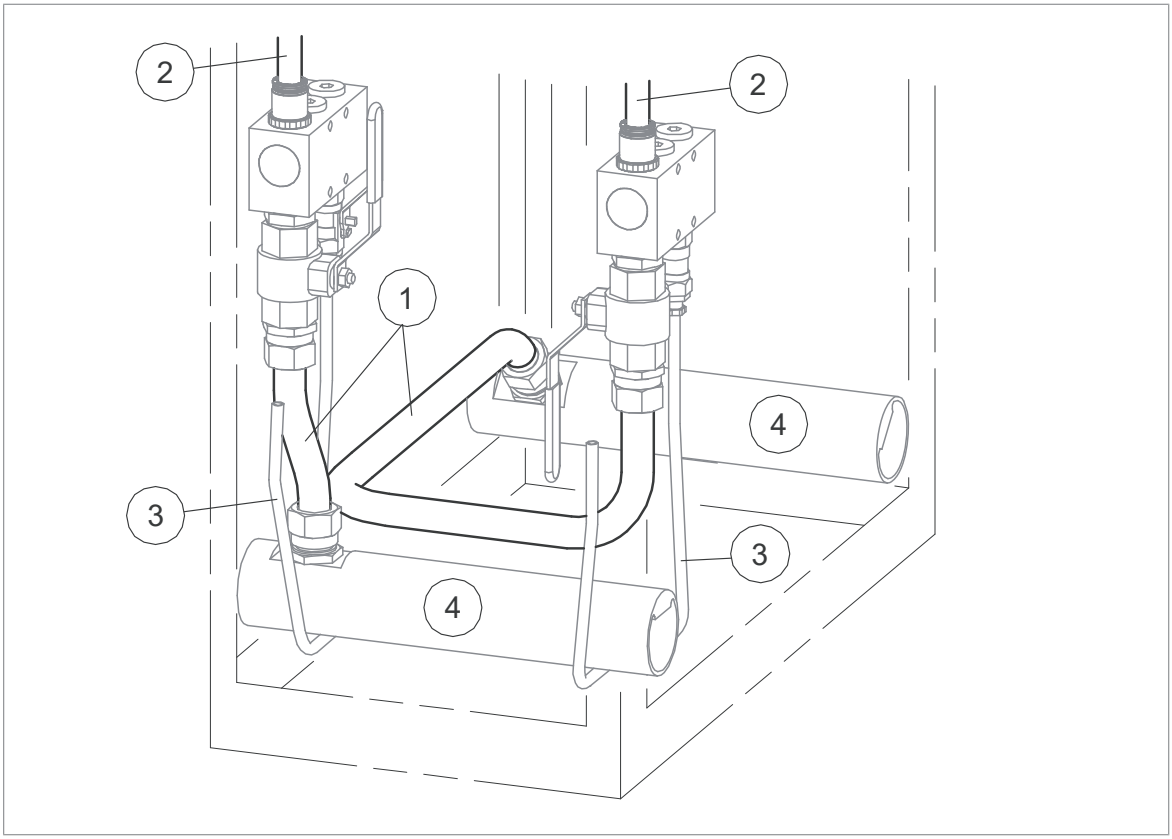

Item	Data	Ordering code
1	PA12P40, 22/18 mm, 50 m	3AXD50000441419
2[1)]	PA12P40, 16/13 mm, 50 m PA12P40, 6/4 mm, 100 m	3AXD50000047488 3AXD50001075316
3	PA11P40, 8/6 mm, 50 m	3AXD50000419302
4	Not part of standard product offering	

1) Use 16/13 mm pipe between the modules and the manifolds. If the heat exchanger is connected in parallel with the module(s), use 8/6 mm or 6/4 mm pipe between the heat exchanger and the manifolds. If the heat exchanger is connected in series with the module(s), use 16/13 mm pipe.

Heat exchanger

The kit includes the heat exchanger and the connectors for piping.

Used with ...	Qty	Ordering code	Kit code	Illustration
All enclosure types	1 per module	3AXD50000041265	L-468-8-440	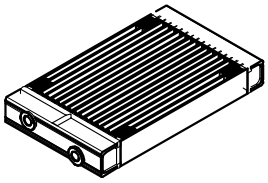

Cooling system parts for LCL filters

Used with ...	Qty	Ordering code	Kit code	Illustration
BLCL-15LC-7, BLCL-24LC-7 and BLCL-25LC-7 (600 mm Rittal VX25 or generic enclosure)	1 / filter cubicle	3AXD50000344970	L-6-8-405	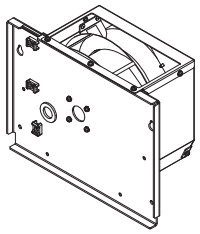 **Note:** Fan to be ordered separately.
BLCL-15LC-7, BLCL-24LC-7 and BLCL-25LC-7 (600 mm Rittal VX25 enclosure)	1	3AXD50000426614	L-6-8-028-VX	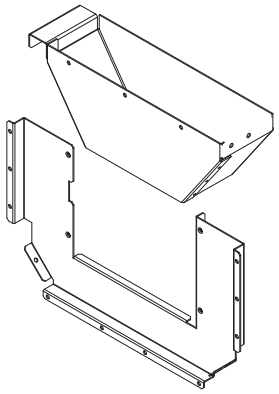 Instruction code: 3AXD50000431397
BLCL-15LC-7, BLCL-24LC-7 and BLCL-25LC-7 (600 mm Rittal VX25 or generic enclosure)	1	3AXD50000426621	L-6-8-029-VX	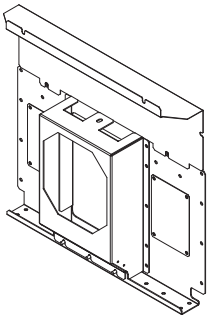 Instruction code: 3AXD50000431588

Used with ...	Qty	Ordering code	Kit code	Illustration
BLCL-15LC-7, BLCL-24LC-7 and BLCL-25LC-7 (600 mm Rittal VX25 or generic enclosure)	1	3AXD50000479795	L-468-8-446	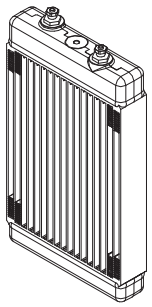 Instruction code: 3AXD50000431588
BLCL-15LC-7 (600 mm Rittal VX25 or generic enclosure)	1	3AXD50000479771	L-468-8-444	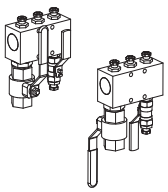 Instruction code: 3AXD50000479498
BLCL-24LC-7 and BLCL-25LC-7 (600 mm Rittal VX25 or generic enclosure)	1	3AXD50000479788	L-468-8-445	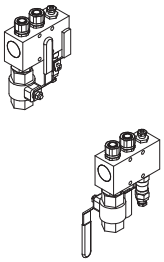 Instruction code: 3AXD50000479634

Cooling fans for LCL filters

The fan blows air through the heat exchanger, circulating the air inside the cabinet. The fan is selected according to the auxiliary voltage.

Auxiliary voltage	Qty	Ordering code
230 V AC (50/60 Hz)	1 / filter cubicle	3AXD50000050763
115 V AC (50/60 Hz)	1 / filter cubicle	3AXD50000050767

Cooling fans for IGBT supply modules

The fan blows air through the heat exchanger and through the module, circulating the air inside the cabinet. The kit contains the fan installed into its cowling which mounts to the module bottom guide.

The fan is selected according to the auxiliary voltage.

Auxiliary voltage	Qty	Ordering code	Illustration
230 V AC (50/60 Hz)	1 / module	3AXD50000043886	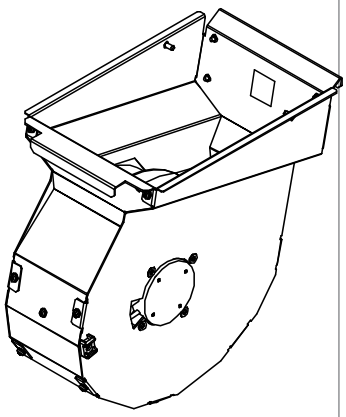
115 V AC (50/60 Hz)	1 / module	3AXD50000045414	

11

Internal cooling circuit

Contents of this chapter

The cooling system of a liquid-cooled drive consists of two circuits: the internal cooling circuit and the external cooling circuit. The internal cooling circuit covers the heat-generating electrical components of the drive and transfers the heat to the cooling unit. In the cooling unit, the heat is transferred to the external cooling circuit which is usually part of a larger external cooling system. This chapter deals with the internal cooling circuit.

Applicability

The information in this chapter is applicable to cabinet-built ACS880 liquid-cooled drives. Except where otherwise indicated, the information is also applicable to drives built out of ACS880 liquid-cooled multidrives modules.

Internal cooling system

Each cubicle has an inlet and an outlet manifold, fitted with a stop valve and a drain valve. The stop valves can be closed to isolate all modules in the cubicle from the main cooling circuit.

In cabinet line-ups built by ABB, valves are color-coded:

- Blue – Open during operation
- Red – Closed during operation

The following diagram shows the coolant pipe connections in a drive system consisting of a supply unit and an inverter unit. Other units, such as brake units, DC/DC converter units have similar cooling arrangements. Other cubicles containing components that require cooling may also contain heat exchangers.

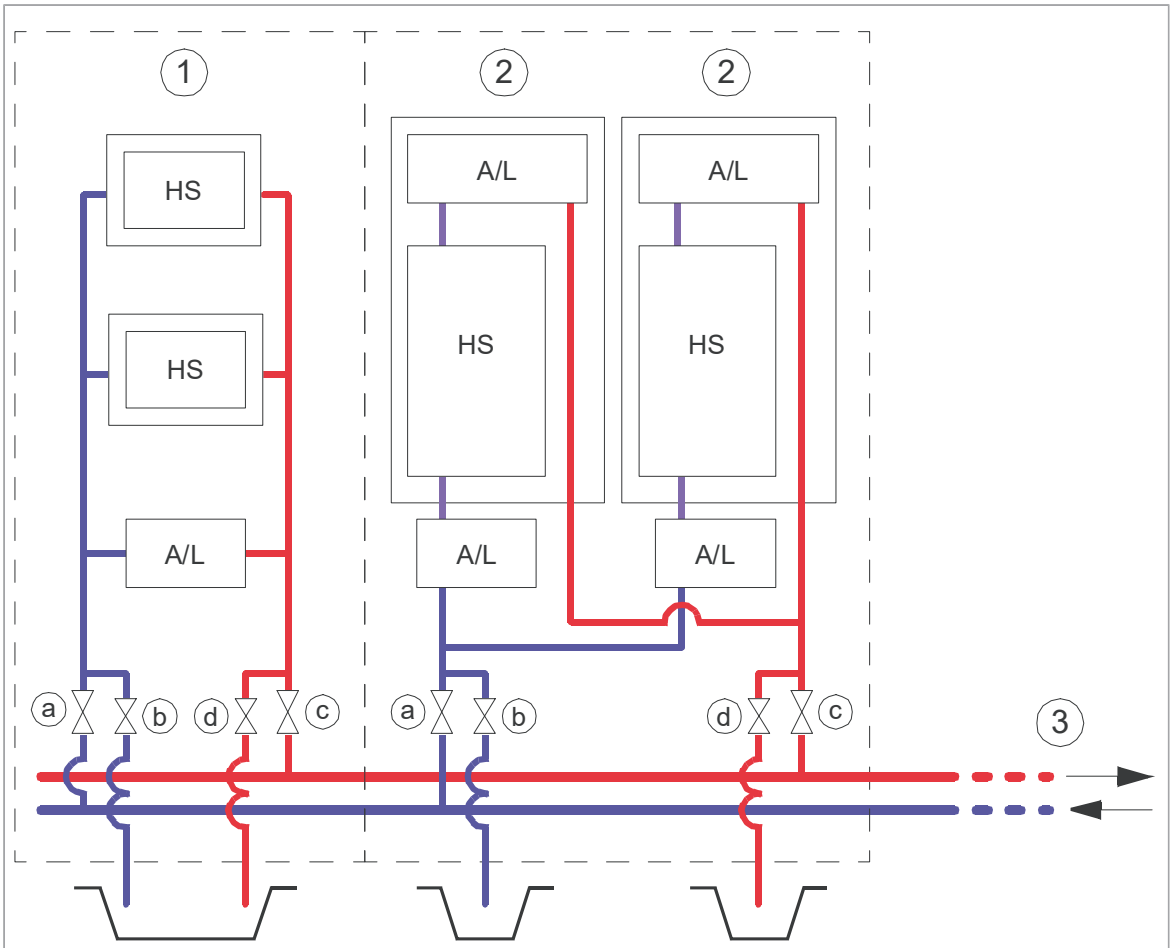

1	Supply modules. The drawing shows the configuration of a diode supply unit with two modules, ie. there is a common air-to-liquid exchanger in the cubicle. With an IGBT supply unit, each module has a dedicated air-to-liquid exchanger as shown for item 2.
2	Inverter modules
3	To/From cooling unit
A/L	Air-to-liquid heat exchanger
HS	Heat sink
a	Inlet valve
b	Inlet-side drain valve
c	Outlet valve
d	Outlet-side drain valve

The coolant used with ACS880 liquid-cooled drive systems is Antifrogen® L 25% or 50% mixture. See Coolant specification (page 298).

Connection to a cooling unit

Connection to an ACS880-1007LC cooling unit

Refer to ACS880-1007LC cooling unit user's manual (3AXD50000129607 [English]).

Connection to a custom cooling unit

General requirements

Equip the system with an expansion vessel to damp pressure rise due to volume changes when the temperature varies. Equip the system with a pump that provides a nominal flow and pressure. Keep the pressure within the limits specified in Technical data (page 298). Install a pressure regulator to make sure that the maximum permissible operating pressure is not exceeded.

Install a bleed valve at the highest point of the cooling circuit, and a drain valve at the lowest point.

The materials that can be used are listed in Cooling circuit materials (page 300).

Coolant temperature control

The temperature of the coolant in the internal cooling circuit must be kept within the limits specified in Technical data (page 298). Note that the minimum temperature is dependent on ambient temperature and relative humidity.

Filling up and bleeding the internal cooling circuit

Both the drive and coolant must be at room temperature before filling up the cooling circuit.

WARNING!
Make sure that the maximum permissible operating pressure is not exceeded. When necessary regulate the pressure to appropriate level by draining excess coolant out of the system.

WARNING!
Bleeding of the cooling circuit is very important and has to be done with great care. Air bubbles in the cooling circuit may reduce or completely block coolant flow and lead to overheating. Let the air out of the cooling system while filling in coolant and, eg. after any power module replacements.

Drive line-ups with an ACS880-1007LC cooling unit

Obey the filling up and bleeding instructions in ACS880-1007LC cooling unit user's manual (3AXD50000129607 [English]).

Drive line-ups with a custom cooling unit

Note:

- In filling up the system, the drain valves in the line-up are used only to vent the air from the circuit so that it can be displaced by the coolant. The actual bleeding of the circuit must be done via an external bleed valve installed at the highest point of the cooling circuit. The most practical location for the valve is usually near or at the cooling unit.
- Observe the instructions given by the manufacturer of the cooling unit. Pay special attention to filling up and bleeding the pumps properly as they may be damaged if operated when dry.
- Draining coolant into the sewer system is not allowed.

1. Open the bleed valve at the cooling unit.
2. Open the inlet valve and the outlet-side drain valve of one cubicle. Keep the outlet valve and the inlet-side drain valve closed.
3. Attach a hose to the outlet-side drain valve and lead it into a suitable container.
4. Fill the circuit with coolant. For the coolant specification, refer to section Coolant specification (page 298).
   To minimize foaming, do not exceed the filling flow rate of 5 l/min (1.3 US gallon/min).
5. As the piping and modules in the cubicle fills up, coolant starts to flow from the hose. Let some coolant flow out, then close the drain valve.
6. Close the inlet valve.
7. Repeat steps 2…6 for all cubicles in the line-up.
8. Open the inlet and outlet valves in all cubicles. Let any air remaining in the system out through the bleed valve at the cooling unit.

9. Close the bleed valve at the cooling unit.
10. Continue to fill in coolant until a base pressure of approximately 250 kPa is achieved.
11. Open the bleed valve of the pump to let out any air.
12. Re-check the pressure and add coolant if necessary.
13. Start the coolant pump. Let any air remaining in the system out through the bleed valve at the cooling unit.
14. After one to two minutes, stop the pump or block the coolant flow with a valve.
15. Re-check the pressure and add coolant if necessary.
16. Repeat steps 13…15 a few times until all air is let out of the cooling circuit. Listen for a humming sound and/or feel the piping for vibration to find out if there is still air left in the circuit.

Draining the internal cooling circuit

The modules in each cubicle can be drained through the drain valves without draining the whole internal cooling circuit.

WARNING!
Hot, pressurized coolant can be present in the cooling circuit. Do not work on the cooling circuit before the pressure is released by stopping the pumps and draining coolant.

1. Attach hoses to each drain valve in the cubicle to be drained. Lead the hoses into a suitable container. Make sure the ends of the hoses are not immersed in coolant at any point so that air can displace the coolant in the system.
2. Open the drain valves. Wait until all coolant has drained.

   Note: Draining coolant into the sewer system is not allowed.
3. If required, dry the piping with compressed oil-free air of less than 6 bar.
4. If the drive is to be stored in temperatures below 0 °C (32 °F),
   - dry the cooling circuit with air,
   - fill the cooling circuit with coolant specified under Coolant specification (page 298).
   - drain the cooling circuit again.

Maintenance intervals

As a general rule, the quality of the coolant should be checked at intervals of two years. This can be done by distributors of Antifrogen® L (see www.clariant.com) if a 250 milliliter sample is provided.

Technical data

Coolant specification

Coolant type

Antifrogen® L (by Clariant International Ltd, www.clariant.com) 25% or 50% mixture, available from Clariant distributors and ABB Service representatives.

Do not dilute the coolant. It is ready to use.

Antifrogen® L 25% mixture is usable in storage temperatures down to -16 °C (3.2 °F). Antifrogen® L 50% mixture is usable in storage temperatures down to -40 °C (-40 °F).

Note that operation below 0 °C (32 °F) is not permitted regardless of the freezing point of the coolant.

WARNING!
The warranty does not cover damage that occurs from the use of incorrect coolant.

Temperature limits

Ambient temperature: See the technical data of the drive/unit.

Freeze protection: The freezing point of the coolant is determined by the concentration of heat transfer fluid in the mixture.

The higher the concentration of heat transfer fluid, the higher the viscosity of the coolant. This results in a higher pressure loss in the system. See Pressure limits (page 300).

The nominal current ratings of drive system modules apply to an Antifrogen® L / water solution of 25/75% (volume). With the Antifrogen® L concentration between 25% and 50%, the drive output current must be derated by 1/3 percentage point per 1 p.p. increase in Antifrogen® L concentration. The drawing below shows the derating factor *(k)* in relation to Antifrogen® L concentration.

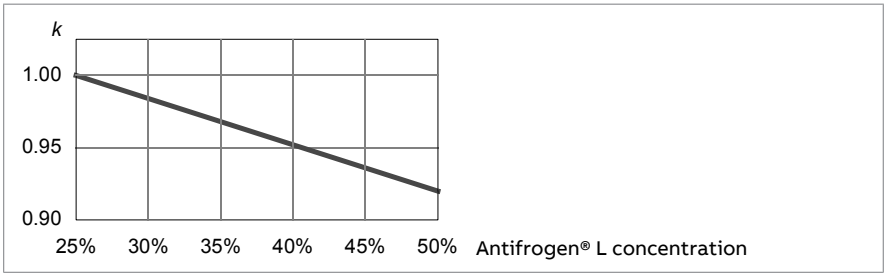

Incoming coolant temperature:

- 0…40 °C (32…104 °F): no drive output current derating required
- 40…45 °C (104…113 °F): drive output current must be derated by 2 percentage points per 1 °C (1.8 °F) temperature increase, as shown by curve (a).
- 45…50 °C (113…122 °F):
  - If components with a maximum operating temperature of 55 °C (131 °F) are installed in the same space as the drive modules, drive output current must

be derated by 6 percentage points per 1 °C (1.8 °F) temperature increase, as shown by curve (c).

- If there are no components with a maximum operating temperature of 55 °C (131 °F) installed in the same space as the drive modules, drive output current must be derated by 2 percentage points per 1 °C (1.8 °F) temperature increase, as shown by curve (b).

The drawing below shows the derating factor *(k)* in relation to coolant temperature.

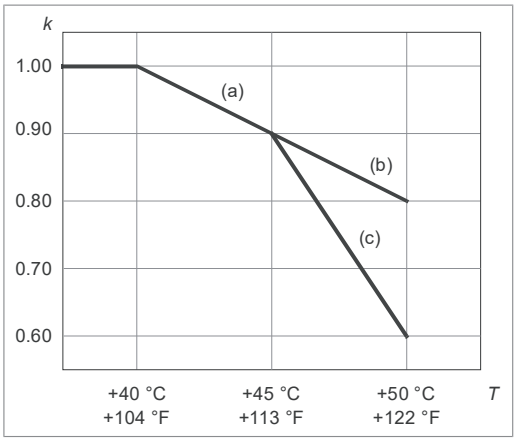

Condensation is not permitted. The minimum coolant temperature to avoid condensation (at an atmospheric pressure of 1 bar) is shown below as a function of relative humidity (RH) and ambient temperature (T_{air}).

T_{air} (°C)	Min. $T_{coolant}$ (°C)				
	RH = 95%	RH = 80%	RH = 65%	RH = 50%	RH = 40%
5	4.3	1.9	-0.9	-4.5	-7.4
10	9.2	6.7	3.7	-0.1	-3.0
15	14.2	11.5	8.4	4.6	1.5
20	19.2	16.5	13.2	9.4	6.0
25	24.1	21.4	17.9	13.8	10.5
30	29.1	26.2	22.7	18.4	15.0
35	34.1	31.1	27.4	23.0	19.4
40	39.0	35.9	32.2	27.6	23.8
45	44.0	40.8	36.8	32.1	28.2
50	49.0	45.6	41.6	36.7	32.8
55	53.9	50.4	46.3	42.2	37.1

	= Not permitted as standard but the coolant temperature must be 0 °C (32 °F) or more.
Example:	At an air temperature of 45 °C and relative humidity of 65% the coolant temperature must not be less than +36.8 °C

Maximum temperature rise: Depends on heat losses and mass flow. Typically 10 °C (18 °F) with nominal losses and flow.

Pressure limits

Base pressure: 250 kPa (recommended); 300 kPa (maximum). “Base pressure” denotes the pressure of the system compared with the atmospheric pressure when the cooling circuit is filled with coolant.

Air counterpressure in expansion vessel (with ACS880-1007LC cooling unit): 80 kPa

Design pressure (PS): 600 kPa

Nominal pressure difference: 120 kPa with Antifrogen® L 25% coolant solution, 140 kPa with Antifrogen® L 50% coolant solution. This has to be taken into account when dimensioning the liquid cooling circuit.

Maximum pressure difference: 160 kPa

Coolant flow rate limits

The maximum coolant flow rate for all drive equipment is 1.3 × nominal. See the technical data chapter for nominal values.

Cooling circuit materials

Materials used in the internal cooling circuit are listed below.

- stainless steel AISI 316L (UNS 31603)
- heavy gauge aluminum
- plastic materials such as PA, PEX and PTFE

  Note: PVC hoses are not suitable for use with antifreeze.
- rubber gasketing NBR (nitrile rubber).

WARNING!
If you connect external piping to the internal cooling circuit, use only materials that are specified above. Other materials can cause galvanic corrosion. If the external piping contains other materials, use a cooling unit with a heat exchanger (for example, ACS880-1007LC) to keep the external piping separate from the internal cooling circuit.

12

Technical data

Contents of this chapter

This chapter contains the technical data for ACS880-204LC IGBT supply modules.

Ratings

The nominal ratings for are given below. The definitions are described below the table.

ACS880-204LC-	Basic module type ACS880-104LC-	Frame size	No-overload use						Light-overload use		Heavy-duty use	
			I_1	I_N	I_{max}	I_{max}	P_N	S_N	I_{Ld}	P_{Ld}	I_{Hd}	P_{Hd}
			A (AC)	A (DC)	A (AC)	A (DC)	kW (DC)	kVA	A (DC)	kW (DC)	A (DC)	kW (DC)
U_N = 400 V												
0270A-3	0300A-3	1×R7i	272	330	410	495	187	188	317	179	247	140
0340A-3	0380A-3	1×R7i	342	415	520	622	235	237	398	225	310	175
0420A-3	0470A-3	1×R7i	419	508	630	762	287	290	488	276	380	215
0530A-3	0300A-3	2×R7i	531	644	800	966	364	368	618	350	482	272
0670A-3	0380A-3	2×R7i	666	808	1000	1211	457	461	775	439	604	342
0770A-3	0470A-3	2×R7i	770	934	1160	1400	528	533	896	507	698	395
1000A-3	0380A-3	3×R7i	999	1211	1500	1817	685	692	1163	658	906	513
1180A-3	0470A-3	3×R7i	1180	1431	1770	2146	809	818	1374	777	1070	605
1310A-3	0380A-3	4×R7i	1314	1593	1980	2390	901	910	1529	865	1192	674
1500A-3	0470A-3	4×R7i	1500	1819	2250	2728	1029	1039	1746	988	1360	770
U_N = 500 V												
0270A-5	0300A-5	1×R7i	272	330	410	494	233	235	316	224	247	174
0340A-5	0380A-5	1×R7i	342	415	520	622	293	296	398	281	310	219
0410A-5	0460A-5	1×R7i	415	503	630	755	356	359	483	341	376	266
0530A-5	0300A-5	2×R7i	531	644	800	966	455	460	618	437	482	341
0670A-5	0380A-5	2×R7i	666	808	1000	1211	571	577	775	548	604	427
0770A-5	0460A-5	2×R7i	770	934	1160	1400	660	667	896	634	698	494
1000A-5	0380A-5	3×R7i	999	1211	1500	1817	857	865	1163	822	906	641
1180A-5	0460A-5	3×R7i	1180	1431	1770	2146	1012	1022	1374	971	1070	757
1310A-5	0380A-5	4×R7i	1314	1593	1980	2390	1127	1138	1529	1082	1192	843
1500A-5	0460A-5	4×R7i	1500	1819	2250	2728	1286	1299	1746	1235	1360	962
U_N = 690 V												
0260A-7	0290A-7	1×R7i	260	315	400	473	308	311	303	295	236	230
0310A-7	0340A-7	1×R7i	306	371	460	557	362	366	356	348	278	271
0350A-7	0389A-7	1×R7i	351	426	530	638	415	419	409	399	318	311
0500A-7	0290A-7	2×R7i	504	611	760	917	596	602	587	572	457	446
0590A-7	0340A-7	2×R7i	594	720	900	1080	703	710	691	675	539	526
0680A-7	0389A-7	2×R7i	684	829	1030	1244	809	817	796	777	620	605
0760A-7	0290A-7	3×R7i	756	917	1140	1375	894	904	880	859	686	669
0880A-7	0340A-7	3×R7i	882	1069	1330	1604	1044	1054	1027	1002	800	781
1020A-7	0389A-7	3×R7i	1017	1233	1530	1850	1203	1215	1184	1155	922	900
1170A-7	0340A-7	4×R7i	1170	1419	1760	2128	1384	1398	1362	1329	1061	1035
1340A-7	0389A-7	4×R7i	1341	1626	2020	2439	1587	1603	1561	1523	1216	1187
0360A-7	0390A-7	1×R8i	360	436	540	655	426	430	419	409	327	319

ACS880-204LC-	Basic module type ACS880-104LC-	Frame size	No-overload use						Light-over-load use		Heavy-duty use	
			I_1	I_N	I_{max}	I_{max}	P_N	S_N	I_{Ld}	P_{Ld}	I_{Hd}	P_{Hd}
			A (AC)	A (DC)	A (AC)	A (DC)	kW (DC)	kVA	A (DC)	kW (DC)	A (DC)	kW (DC)
0400A-7	0430A-7	1×R8i	400	485	600	727	473	478	466	454	363	354
0450A-7	0480A-7	1×R8i	450	546	680	818	532	538	524	511	408	398
0480A-7	0530A-7	1×R8i	480	582	720	873	568	574	559	545	435	425
0560A-7	0600A-7	1×R8i	560	679	840	1018	663	669	652	636	508	496
0620A-7	0670A-7	1×R8i	620	752	930	1128	734	741	722	704	562	549
0700A-7	0750A-7	1×R8i	700	849	1050	1273	828	837	815	795	635	620
0770A-7	0850A-7	1×R8i	770	934	1160	1400	911	920	896	875	698	681
0930A-7	0530A-7	2×R8i	930	1128	1400	1691	1100	1111	1083	1056	843	823
1090A-7	0600A-7	2×R8i	1090	1322	1640	1982	1290	1303	1269	1238	989	965
1180A-7	0670A-7	2×R8i	1180	1431	1770	2146	1396	1410	1374	1340	1070	1044
1360A-7	0750A-7	2×R8i	1360	1649	2040	2473	1609	1625	1583	1545	1233	1204
1500A-7	0850A-7	2×R8i	1500	1819	2250	2728	1775	1793	1746	1704	1360	1328
1800A-7	0670A-7	3×R8i	1800	2182	2700	3274	2130	2151	2095	2045	1633	1593
2020A-7	0750A-7	3×R8i	2020	2449	3030	3674	2390	2414	2351	2294	1832	1788
2220A-7	0850A-7	3×R8i	2220	2692	3330	4038	2627	2653	2584	2522	2013	1965
2670A-7	0750A-7	4×R8i	2670	3237	4010	4856	3159	3191	3108	3033	2422	2363
2930A-7	0850A-7	4×R8i	2930	3553	4400	5329	3467	3502	3411	3328	2657	2593

Definitions

U_N	Supply voltage range
I_1	Nominal rms current
I_N	Nominal current (available continuously with no over-loading)
I_{max}	Maximum current. Available for 10 seconds at start, then as long as allowed by drive temperature.
P_N	Typical power in no-overload use
S_N	Nominal apparent power
I_{Ld}	Continuous rms current allowing 10% overload for 1 minute every 5 minutes
P_{Ld}	Typical power in light-overload use
I_{Hd}	Continuous rms current allowing 50% overload for 1 minute every 5 minutes
P_{Hd}	Typical power in heavy-duty use
Note 1: The ratings apply at an ambient air temperature of 45 °C (113 °F) and a coolant temperature of 40 °C (104 °F). **Note 2:** To achieve the rated power given in the table, the rated current must be higher than or equal to the rated current. For dimensioning, use DriveSize dimensioning tool available from ABB.	

Derating

Surrounding air temperature derating

In the temperature range +45…55 °C (+113…131 °F), the rated output current is derated by 0.5 percentage points for every added 1 °C (1.8 °F). The output current can be calculated by multiplying the current given in the rating table by the derating factor *(k)*:

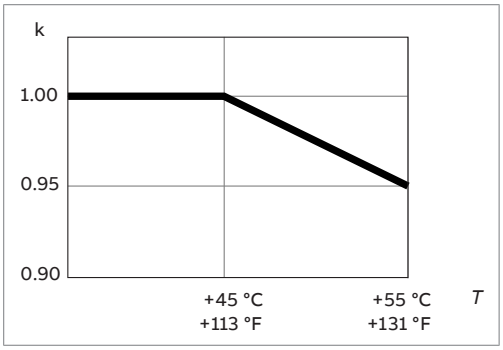

Altitude derating

At altitudes more than 1000 m (3281 ft) above sea level, the output current derating is 1 percentage point for every added 100 m (328 ft). For example, the derating factor for 1500 m (4921 ft) is 0.95. The maximum permitted installation altitude is given in the technical data.

For a more accurate derating, use the DriveSize PC tool.

Type equivalence table

ACS880-204LC-...	Modules used			LCL filter	
	ACS880-104LC-...	DC capacitance (mF)	Qty	LCL filter type	Qty
U_N = 400 V					
0270A-3	0300A-3	9.6	1×R7i	BLCL-14LC-5	1
0340A-3	0380A-3	9.6	1×R7i	BLCL-14LC-5	1
0420A-3	0470A-3	9.6	1×R7i	BLCL-14LC-5	1
0530A-3	0300A-3	19.2	2×R7i	BLCL-15LC-7	1
0670A-3	0380A-3	19.2	2×R7i	BLCL-15LC-7	1
0770A-3	0470A-3	19.2	2×R7i	BLCL-15LC-7	1
1000A-3	0380A-3	28.8	3×R7i	BLCL-24LC-7	1
1180A-3	0470A-3	28.8	3×R7i	BLCL-24LC-7	1
1310A-3	0380A-3	38.4	4×R7i	BLCL-25LC-7	1
1500A-3	0470A-3	38.4	4×R7i	BLCL-25LC-7	1
U_N = 500 V					
0270A-5	0300A-5	9.6	1×R7i	BLCL-14LC-5	1
0340A-5	0380A-5	9.6	1×R7i	BLCL-14LC-5	1
0410A-5	0460A-5	9.6	1×R7i	BLCL-14LC-5	1
0530A-5	0300A-5	19.2	2×R7i	BLCL-15LC-7	1
0670A-5	0380A-5	19.2	2×R7i	BLCL-15LC-7	1
0770A-5	0460A-5	19.2	2×R7i	BLCL-15LC-7	1
1000A-5	0380A-5	28.8	3×R7i	BLCL-24LC-7	1
1180A-5	0460A-5	28.8	3×R7i	BLCL-24LC-7	1
1310A-5	0380A-5	38.4	4×R7i	BLCL-25LC-7	1
1500A-5	0460A-5	38.4	4×R7i	BLCL-25LC-7	1
U_N = 690 V					
0260A-7	0290A-7	5.3	1×R7i	BLCL-13LC-7	1
0310A-7	0340A-7	5.3	1×R7i	BLCL-13LC-7	1
0350A-7	0389A-7	5.3	1×R7i	BLCL-13LC-7	1
0500A-7	0290A-7	10.7	2×R7i	BLCL-15LC-7	1
0590A-7	0340A-7	10.7	2×R7i	BLCL-15LC-7	1
0680A-7	0389A-7	10.7	2×R7i	BLCL-15LC-7	1
0760A-7	0290A-7	16.0	3×R7i	BLCL-15LC-7	1
0880A-7	0340A-7	16.0	3×R7i	BLCL-24LC-7	1
1020A-7	0389A-7	16.0	3×R7i	BLCL-24LC-7	1
1170A-7	0340A-7	21.3	4×R7i	BLCL-24LC-7	1
1340A-7	0389A-7	21.3	4×R7i	BLCL-25LC-7	1
0360A-7	0390A-7	6	1×R8i	BLCL-15LC-7	1
0400A-7	0430A-7	6	1×R8i	BLCL-15LC-7	1
0450A-7	0480A-7	6	1×R8i	BLCL-15LC-7	1
0480A-7	0530A-7	6	1×R8i	BLCL-15LC-7	1

ACS880-204LC-...	Modules used			LCL filter	
	ACS880-104LC-...	DC capacitance (mF)	Qty	LCL filter type	Qty
0560A-7	0600A-7	9	1×R8i	BLCL-15LC-7	1
0620A-7	0670A-7	9	1×R8i	BLCL-15LC-7	1
0700A-7	0750A-7	9	1×R8i	BLCL-15LC-7	1
0770A-7	0850A-7	9	1×R8i	BLCL-15LC-7	1
0930A-7	0530A-7	12	2×R8i	BLCL-24LC-7	1
1090A-7	0600A-7	18	2×R8i	BLCL-24LC-7	1
1180A-7	0670A-7	18	2×R8i	BLCL-24LC-7	1
1360A-7	0750A-7	18	2×R8i	BLCL-25LC-7	1
1500A-7	0850A-7	18	2×R8i	BLCL-25LC-7	1
1800A-7	0670A-7	27	3×R8i	BLCL-24LC-7	2
2020A-7	0750A-7	27	3×R8i	BLCL-24LC-7	2
2220A-7	0850A-7	27	3×R8i	BLCL-24LC-7	2
2670A-7	0750A-7	36	4×R8i	BLCL-25LC-7	2
2930A-7	0850A-7	36	4×R8i	BLCL-25LC-7	2

Fuses

Fuses are given in chapter Ordering information.

Note: The recommended fuses are for branch circuit protection per NEC as required for the UL approval.

LCL filters

Kit contents

LCL filter type	Ordering code	Resistor		Film capacitor	
		Data	Qty	µF	Qty
BLCL-14LC-5	3AXD50000896332	3×120 W, 3×50 kohm	1	3×42	2
BLCL-13LC-7	3AXD50000896431	3×120 W, 3×50 kohm	1	3×42	2
BLCL-15LC-7	3AXD50000234417	3×120 W, 3×50 kohm	1	3×40	3
BLCL-24LC-7	3AXD50000234431	3×120 W, 3×50 kohm	1	3×40	5
BLCL-25LC-7	3AXD50000234448	3×120 W, 3×50 kohm	1	3×40	6

LCL filter type	L_{grid}	$L_{converter}$	Quick connector			Kit instruction
	Qty	Qty	Type	Qty	Qty (locking rings)	Qty
BLCL-14LC-5	1	1	Part of the delivery			1
BLCL-13LC-7	1	1	Part of the delivery			1
BLCL-15LC-7	1	1	3/8" for 16/13 mm	4	4	1
BLCL-24LC-7	1	1	3/8" for 16/13 mm	4	4	1
BLCL-25LC-7	1	1	3/8" for 16/13 mm	4	4	1

Technical data

The technical data and the weights of the LCL filter components are shown below. For the dimensions, see chapter Dimension drawings.

LCL filter type	L_{grid}	$L_{converter}$	Capacitor		Resistor	Weight [kg (lb)]
	L [mH]	L [mH]	Capacitor capacitance [µF]	Filter capacitance [µF]	W	
BLCL-14LC-5	0.100	0.126	3×42	3×84	3×120	220 (485)
BLCL-13LC-7	0.160	0.197	3×42	3×84	3×120	201 (443)

LCL filter type	L_{grid}		$L_{converter}$		Capacitor		Resistor
	L [mH]	Weight [kg (lb)]	L [mH]	Weight [kg (lb)]	Capacitor capacitance [µF]	Filter capacitance [µF]	W
BLCL-15LC-7	0.085	144 (317)	0.106	150 (331)	3×40	3×120	3×120
BLCL-24LC-7	0.042	146 (322)	0.053	148 (326)	3×40	3×200	3×120

LCL filter type	L_{grid}		$L_{converter}$		Capacitor		Resistor
	L [mH]	Weight [kg (lb)]	L [mH]	Weight [kg (lb)]	Capacitor capacitance [µF]	Filter capacitance [µF]	W
BLCL-25LC-7	0.034	212 (467)	0.043	216 (476)	3×40	3×240	3×120

Charging kit contents

Charging kit code (IEC)	Charging resistors		OS switch fuse rating	AC fuse rating	DC fuse rating	Contactor rating
	ohm	Qty	I_e [A]	I_n [A]	I_n [A]	I_e [A]
3AXD50000250776	5	3	40	16	125	26
3AXD50000250783	5	3	40	20	125	26
3AXD50000250790	5	6	40	35	125	52
3AXD50000250806	5	9	63	50	125	65
3AXD50000251216	5	9	63	50	350	65

Charging kit code (UL)	Charging resistors		OS switch fuse rating	AC fuse rating	DC fuse rating	Contactor rating
	ohm	Qty	I_e [A]	I_n [A]	I_n [A]	I_e [A]
3AXD50000686308	5	3	30	10	125	26
3AXD50000686612	5	3	30	15	125	26
3AXD50000686629	5	6	30	20	125	52
3AXD50000686636	5	9	30	25	125	65
3AXD50000686643	5	9	30	30	350	65

Dimensions and weights

The weights of the supply modules are shown below. For the dimensions, see chapter Dimension drawings.

Module type	Weight	
	kg	lb
ACS880-104LC-0300A-3 … -0470A-3 ACS880-104LC-0300A-5 … -0460A-5	40	88
ACS880-104LC-0290A-7 … -0389A-7	41	90
ACS880-104LC-0390A-7 … -0530A-7	59	130
ACS880-104LC-0600A-7 … -0850A-7	63	139

Free space requirements

Frame R7i:

- Left and right sides, below, above, back: None, but the return flow of air must not be restricted.
- Front: Space needed by coolant piping.

Frame R8i:

- Left and right sides, back: None, but the return flow of air must not be restricted.
- Front: Space needed by coolant piping.
- Below: Space needed by heat exchanger and cooling fan.
- Above: The cooling air flow through the module should not be restricted.

Allowable mounting positions

IGBT supply module:

- Upright
- On left-hand side (viewed from the front)

LCL filter components:

- Upright

Losses, cooling data and noise

ACS880-204LC-	P_{loss} (ISU)	P_{loss} (LCL)	P_{loss} (ISU+LCL)	Power loss, total	
				into coolant	into air
	kW	kW	kW	kW	kW
U_N = 400 V					
0270A-3	2.7	1.3	4.0	5.5	0.14
0340A-3	3.7	1.6	5.3	6.8	0.17
0420A-3	5.0	2.0	7.0	8.6	0.22
0530A-3	5.2	3.2	8.4	10.4	0.3
0670A-3	7.2	4.7	11.9	13.9	0.4
0770A-3	9.3	5.8	15.1	17.2	0.4
1000A-3	10.8	5.0	15.8	18.7	0.5
1180A-3	14.2	6.3	20.5	23.6	0.6
1310A-3	14.2	5.6	19.8	23.2	0.6
1500A-3	18.1	6.9	25.0	28.6	0.7
U_N = 500 V					
0270A-5	2.9	1.3	4.2	5.7	0.15
0340A-5	4.0	1.6	5.6	7.1	0.18
0410A-5	5.3	2.0	7.3	8.8	0.23
0530A-5	5.6	3.3	8.9	11.0	0.3
0670A-5	7.7	4.8	12.5	14.6	0.4
0770A-5	9.8	6.0	15.8	17.9	0.5
1000A-5	11.6	5.2	16.8	19.6	0.5
1180A-5	15.0	6.5	21.5	24.6	0.6
1310A-5	15.2	5.8	21.0	24.4	0.6
1500A-5	19.1	7.1	26.2	29.8	0.8
U_N = 690 V					
0260A-7	4.4	1.8	6.2	7.6	0.2
0310A-7	5.4	2.2	7.6	9.0	0.2
0350A-7	6.4	2.8	9.2	10.6	0.3
0500A-7	8.5	3.2	11.7	13.6	0.3
0590A-7	10.4	4.1	14.5	16.5	0.4
0680A-7	12.5	5.1	17.6	19.5	0.5
0760A-7	12.8	6.2	19.0	21.0	0.5

ACS880-204LC-	P_{loss} (ISU)	P_{loss} (LCL)	P_{loss} (ISU+LCL)	Power loss, total	
				into coolant	into air
	kW	kW	kW	kW	kW
0880A-7	15.5	5.2	20.7	23.0	0.6
1020A-7	18.5	5.5	24.0	27.0	0.7
1170A-7	20.5	6.8	27.3	30.0	0.8
1340A-7	24.4	6.3	30.7	34.0	0.9

ACS880-204LC-	P_{loss} (ISU)	P_{loss} (LCL)	P_{loss} (LCL cabinet)	P_{loss} (ISU+LCL+LCL cabinet)	Power loss, total	
					into coolant	into air
	kW	kW	kW	kW	kW	kW
U_N = 690 V						
0360A-7	5.2	2.0	0.3	7.5	7.3	0.2
0400A-7	5.8	2.2	0.3	8.4	8.2	0.2
0450A-7	6.6	2.6	0.3	9.6	9.4	0.2
0480A-7	7.3	2.9	0.4	10.6	10.3	0.3
0560A-7	8.5	3.7	0.4	12.6	12.3	0.3
0620A-7	9.5	4.4	0.5	14.3	14.0	0.4
0700A-7	11.1	5.3	0.6	17.0	16.6	0.4
0770A-7	12.5	6.3	0.6	19.4	18.9	0.5
0930A-7	14.2	4.6	0.6	19.4	18.9	0.5
1090A-7	16.5	6.0	0.8	23.3	22.7	0.6
1180A-7	18.8	6.9	0.9	26.5	25.9	0.7
1360A-7	21.4	6.4	0.9	28.6	27.9	0.7
1500A-7	24.1	7.5	1.0	32.6	31.8	0.8
1800A-7	27.6	8.2	1.2	37.0	36.1	0.9
2020A-7	31.7	10.1	1.4	43.1	42.0	1.1
2220A-7	35.5	11.9	1.6	49.0	47.7	1.2
2670A-7	41.7	11.7	1.7	55.1	53.7	1.4
2930A-7	46.7	13.8	1.9	62.4	60.8	1.6

ACS880-204LC-	Coolant volume		Coolant flow rate[1]		Pressure loss	Noise level[2]
	module(s)	LCL filter	module(s)	LCL filter		
	l (US qt)	l (US qt)	l/min (US gal/min)	l/min (US gal/min)	kPa	dB(A)
U_N = 400 V						
0270A-3	0.2 (0.2)	2.7 (2.9)	22 (5.8)[3]		120	[4]
0340A-3	0.2 (0.2)	2.7 (2.9)	22 (5.8)[3]		120	[4]
0420A-3	0.2 (0.2)	2.7 (2.9)	22 (5.8)[3]		120	[4]
0530A-3	0.4 (0.4)	4.1 (4.3)	26 (6.9)	20 (5.3)	120	[4]
0670A-3	0.4 (0.4)	4.1 (4.3)	26 (6.9)	20 (5.3)	120	[4]
0770A-3	0.4 (0.4)	4.1 (4.3)	26 (6.9)	20 (5.3)	120	[4]
1000A-3	0.6 (0.6)	4.6 (4.9)	39 (10.3)	40 (10.6)	120	[4]
1180A-3	0.6 (0.6)	4.6 (4.9)	39 (10.3)	40 (10.6)	120	[4]
1310A-3	0.8 (0.8)	4.6 (4.9)	52 (13.7)	40 (10.6)	120	[4]
1500A-3	0.8 (0.8)	4.6 (4.9)	52 (13.7)	40 (10.6)	120	[4]
U_N = 500 V						
0270A-5	0.2 (0.2)	2.7 (2.9)	22 (5.8)[3]		120	[4]
0340A-5	0.2 (0.2)	2.7 (2.9)	22 (5.8)[3]		120	[4]
0410A-5	0.2 (0.2)	2.7 (2.9)	22 (5.8)[3]		120	[4]
0530A-5	0.4 (0.4)	4.1 (4.3)	26 (6.9)	20 (5.3)	120	[4]
0670A-5	0.4 (0.4)	4.1 (4.3)	26 (6.9)	20 (5.3)	120	[4]
0770A-5	0.4 (0.4)	4.1 (4.3)	26 (6.9)	20 (5.3)	120	[4]
1000A-5	0.6 (0.6)	4.6 (4.9)	39 (10.3)	40 (10.6)	120	[4]
1180A-5	0.6 (0.6)	4.6 (4.9)	39 (10.3)	40 (10.6)	120	[4]
1310A-5	0.8 (0.8)	4.6 (4.9)	52 (13.7)	40 (10.6)	120	[4]
1500A-5	0.8 (0.8)	4.6 (4.9)	52 (13.7)	40 (10.6)	120	[4]
U_N = 690 V						
0260A-7	0.2 (0.2)	2.7 (2.9)	22 (5.8)[3]		120	66
0310A-7	0.2 (0.2)	2.7 (2.9)	22 (5.8)[3]		120	66
0350A-7	0.2 (0.2)	2.7 (2.9)	22 (5.8)[3]		120	66
0500A-7	0.4 (0.4)	4.1 (4.3)	26 (6.9)	20 (5.3)	120	[4]
0590A-7	0.4 (0.4)	4.1 (4.3)	26 (6.9)	20 (5.3)	120	[4]
0680A-7	0.4 (0.4)	4.1 (4.3)	26 (6.9)	20 (5.3)	120	[4]
0760A-7	0.6 (0.6)	4.1 (4.3)	39 (10.3)	20 (5.3)	120	[4]

ACS880-204LC-	Coolant volume		Coolant flow rate [1]		Pressure loss	Noise level [2]
	module(s)	LCL filter	module(s)	LCL filter		
	l (US qt)	l (US qt)	l/min (US gal/min)	l/min (US gal/min)	kPa	dB(A)
0880A-7	0.6 (0.6)	4.6 (4.9)	39 (10.3)	40 (10.6)	120	[4]
1020A-7	0.6 (0.6)	4.6 (4.9)	39 (10.3)	40 (10.6)	120	[4]
1170A-7	0.8 (0.8)	4.6 (4.9)	52 (13.7)	40 (10.6)	120	[4]
1340A-7	0.8 (0.8)	4.6 (4.9)	52 (13.7)	40 (10.6)	120	[4]

[1] The mass flow values are for modules and LCL filters only. Additional heat exchangers, which might be needed for cooling of cabinet, are not included in these mass flow values.
[2] Measured in a hemi-anechoic room in accordance with ISO 9614-2 standard.
[3] The value is common for supply module, LCL filter and heat exchanger, since they are in series in the same cubicle.
[4] Depends on the cabinet construction and selected fans.

ACS880-204LC-	Coolant volume		Coolant flow rate		Pressure loss	Noise level [1]
	module(s)	LCL filter	module(s)	LCL filter		
	l (US qt)	l (US qt)	l/min (US gal/min)	l/min (US gal/min)	kPa	dB(A)
U_N = 690 V						
0360A-7	1.6 (1.7)	4.1 (4.3)	16 (4.2)	20 (5.3)	120	66
0400A-7	1.6 (1.7)	4.1 (4.3)	16 (4.2)	20 (5.3)	120	66
0450A-7	1.6 (1.7)	4.1 (4.3)	16 (4.2)	20 (5.3)	120	66
0480A-7	1.6 (1.7)	4.1 (4.3)	16 (4.2)	20 (5.3)	120	66
0560A-7	1.6 (1.7)	4.1 (4.3)	16 (4.2)	20 (5.3)	120	66
0620A-7	1.6 (1.7)	4.1 (4.3)	16 (4.2)	20 (5.3)	120	66
0700A-7	1.6 (1.7)	4.1 (4.3)	16 (4.2)	20 (5.3)	120	66
0770A-7	1.6 (1.7)	4.1 (4.3)	16 (4.2)	20 (5.3)	120	66
0930A-7	3.2 (3.4)	4.1 (4.3)	32 (8.5)	40 (10.6)	120	68
1090A-7	3.2 (3.4)	4.1 (4.3)	32 (8.5)	40 (10.6)	120	68
1180A-7	3.2 (3.4)	4.6 (4.9)	32 (8.5)	40 (10.6)	120	68
1360A-7	3.2 (3.4)	4.6 (4.9)	32 (8.5)	40 (10.6)	120	68
1500A-7	3.2 (3.4)	4.6 (4.9)	32 (8.5)	40 (10.6)	120	68
1800A-7	4.8 (5.1)	8.2 (8.7)	48 (12.5)	80 (21.1)	120	70
2020A-7	4.8 (5.1)	8.2 (8.7)	48 (12.5)	80 (21.1)	120	70
2220A-7	4.8 (5.1)	8.2 (8.7)	48 (12.5)	80 (21.1)	120	70
2670A-7	6.4 (6.8)	9.2 (9.7)	64 (17)	80 (21.1)	120	71

ACS880-204LC-	Coolant volume		Coolant flow rate		Pressure loss	Noise level[1)]
	module(s)	LCL filter	module(s)	LCL filter		
	l (US qt)	l (US qt)	l/min (US gal/min)	l/min (US gal/min)	kPa	dB(A)
2930A-7	6.4 (6.8)	9.2 (9.7)	64 (17)	80 (21.1)	120	71

1) Measured in a hemi-anechoic room in accordance with ISO 9614-2 standard.

These losses are not calculated according to the ecodesign standard IEC 61800-9-2.

Tightening torques

Unless a tightening torque is specified in the text, the following torques can be used.

Electrical connections

Size	Torque	Strength class
M3	0.5 N·m (4.4 lbf·in)	4.6...8.8
M4	1 N·m (9 lbf·in)	4.6...8.8
M5	4 N·m (35 lbf·in)	8.8
M6	9 N·m (6.6 lbf·ft)	8.8
M8	22 N·m (16 lbf·ft)	8.8
M10	42 N·m (31 lbf·ft)	8.8
M12	70 N·m (52 lbf·ft)	8.8
M16	120 N·m (90 lbf·ft)	8.8

Mechanical connections

Size	Max. torque	Strength class
M5	6 N·m (53 lbf·in)	8.8
M6	10 N·m (7.4 lbf·ft)	8.8
M8	24 N·m (17.7 lbf·ft)	8.8

Insulation supports

Size	Max. torque	Strength class
M6	5 N·m (44 lbf·in)	8.8
M8	9 N·m (6.6 lbf·ft)	8.8
M10	18 N·m (13.3 lbf·ft)	8.8
M12	31 N·m (23 lbf·ft)	8.8

Cable lugs

Size	Max. torque	Strength class
M8	15 N·m (11 lbf·ft)	8.8 (A2-70 or A4-70)
M10	32 N·m (23.5 lbf·ft)	8.8
M12	50 N·m (37 lbf·ft)	8.8

Typical power cable sizes

The tables below give the current carrying capacity (I_{Lmax}) and typical size for copper and aluminum cables with PVC or XLPE insulation. A correction factor K = 0.70 is used. Time const. is the temperature time constant of the cable.

The cable sizing is based on a maximum of 9 cables installed side by side on a ladder type cable tray, with three trays on top of each other (with 30 cm of space between the trays), and an ambient temperature of 30 °C (IEC 60364-5-52).

Conductor cross-section (copper)		PVC insulation Conductor temperature 70°		XLPE insulation Conductor temperature 90°		Typical dimensions of copper cable	
mm²	AWG / kcmil	I_{Lmax} (A)	Time const. (s)	I_{Lmax} (A)	Time const. (s)	Size	ø [mm]
1.5	16	13	85	16	67	3 × 1.5 + 1.5	13
2.5	12	18	121	23	88	3 × 2.5 + 2.5	14
4	12	24	175	30	133	3 × 4 + 4	16
6	10	30	251	38	186	3 × 6 + 6	18
10	8	42	359	53	268	3 × 10 + 10	21
16	6	56	514	70	391	3 × 16 + 16	23
25	4	71	791	89	598	3 × 25 + 16	24
35	1	88	1000	110	760	3 × 35 + 16	26
50	1/0	107	1308	134	990	3 × 50 + 25	29
70	2/0	137	1613	171	1230	3 × 70 + 35	32
95	4/0	167	2046	209	1551	3 × 95 + 50	38
120	250	193	2441	241	1859	3 × 120 + 70	41
150	300	223	2820	279	2139	3 × 150 + 70	44
185	400	255	3329	319	2525	3 × 185 + 95	50
240	500	301	4073	376	3099	3 × 240 + 120	55
300	600	348	4779	435	3636	3 × 300 + 150	58

Conductor cross-section (aluminum)		PVC insulation Conductor temperature 70°		XLPE insulation Conductor temperature 90°		Typical dimensions of aluminum cable	
mm²	AWG / kcmil	I_{Lmax} (A)	Time const. (s)	I_{Lmax} (A)	Time const. (s)	Size	ø [mm]
35	1	67	736	84	669	3 × 35 + 10 Cu	26
50	1/0	82	959	102	874	3 × 50 + 15 Cu	29
70	2/0	105	1182	131	1079	3 × 70 + 21 Cu	32
95	4/0	128	1492	159	1376	3 × 95 + 29 Cu	38
120	250	148	1776	184	1637	3 × 120 + 41 Cu	41
150	300	171	2042	213	1881	3 × 150 + 41 Cu	44
185	400	196	2422	243	2237	3 × 185 + 57 Cu	49
240	500	231	2967	286	2740	3 × 240 + 72 Cu	54
300	600	267	3478	330	3229	3 × 300 + 88 Cu	58

Terminal and cable entry data for the power cables

The locations and sizes of the cable entries are shown in the dimension drawings delivered with the module, and the dimension drawing examples in this manual.

Busbar terminal material: Tin-plated copper.

Electrical power network specification

Specifications in this section are valid for modules installed in Rittal VX25 or generic cabinets with kits and components defined in the manual or corresponding cabinet structure. Cabinet construction and busbars placement must be dimensioned according to the short-circuit requirements indicated in this manual.

Voltage (U_1)	690 V units: IEC: 525…690 V AC 3-phase ± 10% In corner-grounded TN systems: 525…600 V AC UL/CSA: 525…600 V AC This is indicated in the type designation label as typical input voltage levels (3~ 525/600/690 V AC).
Network type	TN (grounded) and IT (ungrounded) systems
Frequency	50/60 Hz, variation ± 5% of nominal frequency
Imbalance	Max. ± 3% of nominal phase-to-phase input voltage
Short-circuit withstand strength (IEC/EN 61439-1)	**Supply units with ABB-defined main breaker and fuses:** Frame R7i module(s): Rated conditional short-circuit current of LCL+ISU (I_{cc}) is 50 kA with module's AC fuses given in this manual. Frame R8i module(s): Rated conditional short-circuit current of LCL+ISU (I_{cc}) is 65 kA with module's AC fuses given in this manual.
Short-circuit current protection (UL 508A, CSA C22.2 No. 14-13)	The drive is suitable for use on a circuit capable of delivering not more than 100,000 rms symmetrical amperes at 600 V maximum when the input cable is protected with class T fuses.
Fundamental power factor (cos phi_1)	0.99

<table>
<tr><td>Harmonic distortion</td><td>Harmonics are below the limits defined in IEEE519.
<table>
<tr><th>R_{sc}</th><th>THD Voltage [%]</th><th>THD Current [%]</th></tr>
<tr><td>20</td><td>3</td><td>2.5 [1)]</td></tr>
<tr><td>100</td><td>0.8</td><td>2.5 (4.0 with types -0390A…-0520A-7) [1)]</td></tr>
<tr><td colspan="3">$$THD = \sqrt{\sum_{2}^{50}\left(\frac{I_n}{I_N}\right)^2}$$</td></tr>
</table>
1) Other loads may influence the THD value.
THD = Total Harmonic Distortion (THD). The voltage THD depends on the short-circuit ratio (R_{sc}). The spectrum of the distortion also contains interharmonics.
$R_{sc} = I_{sc}/I_N$
I_{sc} = short-circuit current at point of common coupling (PCC)
I_N = supply unit nominal current
I_n = n^{th} harmonic current component</td></tr>
</table>

Control unit connection data

See chapter The control unit.

Coolant connections

Supply module: 16 mm, for polyamide (PA) pipe; heat exchanger: 8/6 mm pipe

Efficiency

97.5…98.8% at nominal power level

The efficiency is not calculated according to the ecodesign standard IEC 61800-9-2.

Energy efficiency data (ecodesign)

Energy efficiency data is not provided for the drive/unit. Multidrives and multidrive modules are not in the scope of the EU ecodesign requirements (Regulation EU/2019/1781) or the UK ecodesign requirements (Regulation SI 2021 No. 745).

Protection classes

Degrees of protection (IEC/EN 60529)	IP00
Enclosure types (UL 50/50E)	UL Open Type
Overvoltage category (IEC/EN 60664-1)	III
Protective class (IEC/EN 61800-5-1)	I

Ambient conditions

This section gives the environmental requirements for the converter module. The converter module must be used in a heated indoor controlled environment.

	Operation installed for stationary use	**Storage in protective package**	**Transportation in protective package**
Altitude above sea level	0…4000 m (13123 ft)* Output derated above 1000 m (3281 ft). See section Altitude derating. *Neutral-grounded TN and TT network systems, non-corner-grounded IT network systems. Corner-grounded TN, TT and IT network systems up to 600 V.	-	-
Air temperature	0 … +45 °C (+32 … +113 °F), no condensation allowed. Output derated in the range +45 … +55 °C (+113 … +131 °F).	-40 … +70 °C (-40 … +158 °F)	-40 … +70 °C (-40 … +158 °F)
Relative humidity	Maximum 95%, no condensation allowed	Maximum 95%, no condensation allowed	Maximum 95%, no condensation allowed
	No condensation allowed. Maximum allowed relative humidity is 60% in the presence of corrosive gases.		
Contamination	IEC/EN 60721-3-3:2002: Classification of environmental conditions - Part 3-3: Classification of groups of environmental parameters and their severities - Stationary use of weather protected locations	IEC 60721-3-1:1997	IEC 60721-3-2:1997
Chemical gases	Class 3C2	Class 1C2	Class 2C2
Solid particles	Class 3S1	Class 1S3 (packing must support this, otherwise 1S2)	Class 2S2
	No conductive dust allowed.		

	Operation installed for stationary use	Storage in protective package	Transportation in protective package
Vibration	IEC 61800-5-1 IEC 60068-2-6:2007, EN 60068-2-6:2008 Environmental testing Part 2: Tests -Test Fc: Vibration (sinusoidal) 10 … 57 Hz, max. 0.075 mm amplitude 57 … 150 Hz 1 *g* Tested in a typical cabinet assembly according to: Max. 1 mm (0.04 in.) (peak value, 5 … 13.2 Hz), max. 0.7 *g* (13.2 … 100 Hz) sinusoidal	IEC/EN 60721-3-1:1997	IEC/EN 60721-3-1:1997
Shock IEC 60068-2-27:2008, EN 60068-2-27:2009 Environmental testing - Part 2-27: Tests - Test Ea and guidance: Shock	Not allowed	With packing max. 100 m/s² (330 ft./s²) 11 ms	With packing max. 100 m/s² (330 ft./s²) 11 ms

Cooling

Cooling method: Liquid cooling

Colors

PMS 1C Cool Gray, PMS Process Black

Materials

Module

Refer to ACS880 cabinet-installed drives and multidrive modules recycling instructions and environmental information (3AXD50000153909 [English]).

Packaging of module

This is a complete list of the package materials. The materials vary depending on the frame size (packages do not contain all materials listed below).

- Cardboard (heavy duty quality with wet strength glue in large modules)
- Molded pulp
- Plywood
- Wood
- PP (strapping)
- EPP (foam)

- PE (plastic bag and/or VCI film)
- Metal (fixing clamps, screws).

Packaging of options

- Cardboard
- Kraft paper
- PP (straps)
- PE (film, bubble wrap)
- Plywood, wood (only for heavy components).

Materials vary according to the item type, size and shape. Typical package consists of a cardboard box with paper filling or bubble wrap. ESD-safe packing materials are used for printed circuit boards and similar items.

Manuals

Printed product manuals are made of recyclable paper. Product manuals are available on the Internet.

Disposal

The main parts of the drive can be recycled to preserve natural resources and energy. Product parts and materials should be dismantled and separated.

Generally all metals, such as steel, aluminum, copper and its alloys, and precious metals can be recycled as material. Plastics, rubber, cardboard and other packaging material can be used in energy recovery.

Printed circuit boards and DC capacitors need selective treatment according to IEC 62635 guidelines.

To aid recycling, most plastic parts are marked with an appropriate identification code. In addition, components containing substances of very high concern (SVHCs) are listed in European Chemicals Agency's SCIP database. SCIP is the database for information on Substances of Concern In articles as such or in complex objects (Products) established under the Waste Framework Directive (2008/98/EC). For further information, contact your local ABB distributor or consult European Chemicals Agency's SCIP database to find out which SVHCs are used in the drive, and to find out where those components are located.

Contact your local ABB distributor for further information on environmental aspects. End of life treatment must follow international and national regulations.

For more information on ABB end of life services, refer to new.abb.com/service/end-of-lifeservices.

Auxiliary circuit current consumption

Control equipment

Device	U_N	f Hz	I_{cont} A	I_{start} A	P_{cont} W	S_{cont} VA
UCU control unit	24 V DC (+30%/-20%)	-	2.9	-	70	-
BCU control unit	24 V DC (±10%)	-	2.0	-	48	-
R7i module: internal electronics	230 V AC (+15%/-20%)	50	0.37	-	85	-
	115 V AC (+15%/-20%)	60	0.74	-	85	-
R8i module: internal electronics	230 V AC (+15%/-20%)	50	0.41	-	95	-
	115 V AC (+15%/-20%)	60	0.83	-	95	-
CIO-01	24 V (-15%/+20%)	-	0.1	-	-	-
BAMU-12C	24 V (±10%)	-	0.25	-	-	-
BSFC-12C charging controller	24 V DC (±10%)	-	0.15	-	-	-
PDAL2 switch/disconnector interlock coil	24 V DC (+10%/-30%)	-	-	-	-	9

Cooling fans

Frame size	Qty	U_N V AC	f Hz	I_{cont} A
R7i	1 [1]	14.0 … 26.5 V DC	-	1.35
R8i, LCL filter	2 [2]	200…240 V AC	50/60	1.4
		100…130 V AC	50/60	2.4

1) For the cubicle containing the R7i module and the LCL filter.
2) One cooling fan for the R8i module and one for the LCL filter.

Definitions

f	Supply frequency
I_{cont}	Continuous current consumption
I_{start}	Calculated load current at start
P_{cont}	Continuous input power
U_N	Voltage requirement

Standards and markings

See ACS880 liquid-cooled multidrive cabinets and modules electrical planning (3AXD50000048634 [English]).

Disclaimers

Generic disclaimer

The manufacturer shall have no obligation with respect to any product which (i) has been improperly repaired or altered; (ii) has been subjected to misuse, negligence or accident; (iii) has been used in a manner contrary to the manufacturer’s instructions; or (iv) has failed as a result of ordinary wear and tear.

Cyber security disclaimer

This product is designed to be connected to and to communicate information and data via a network interface. It is Customer's sole responsibility to provide and continuously ensure a secure connection between the product and Customer network or any other network (as the case may be). Customer shall establish and maintain any appropriate measures (such as but not limited to the installation of firewalls, application of authentication measures, encryption of data, installation of anti-virus programs, etc.) to protect the product, the network, its system and the interface against any kind of security breaches, unauthorized access, interference, intrusion, leakage and/or theft of data or information.

ABB and its affiliates are not liable for damages and/or losses related to such security breaches, any unauthorized access, interference, intrusion, leakage and/or theft of data or information.

13

Dimension drawings

Contents of this chapter

This chapter contains dimension drawings of the ACS880-204LC IGBT supply modules and accessories. Dimensional drawings of most installation accessories are available from ABB on request.

Frame R7i module and installation frame

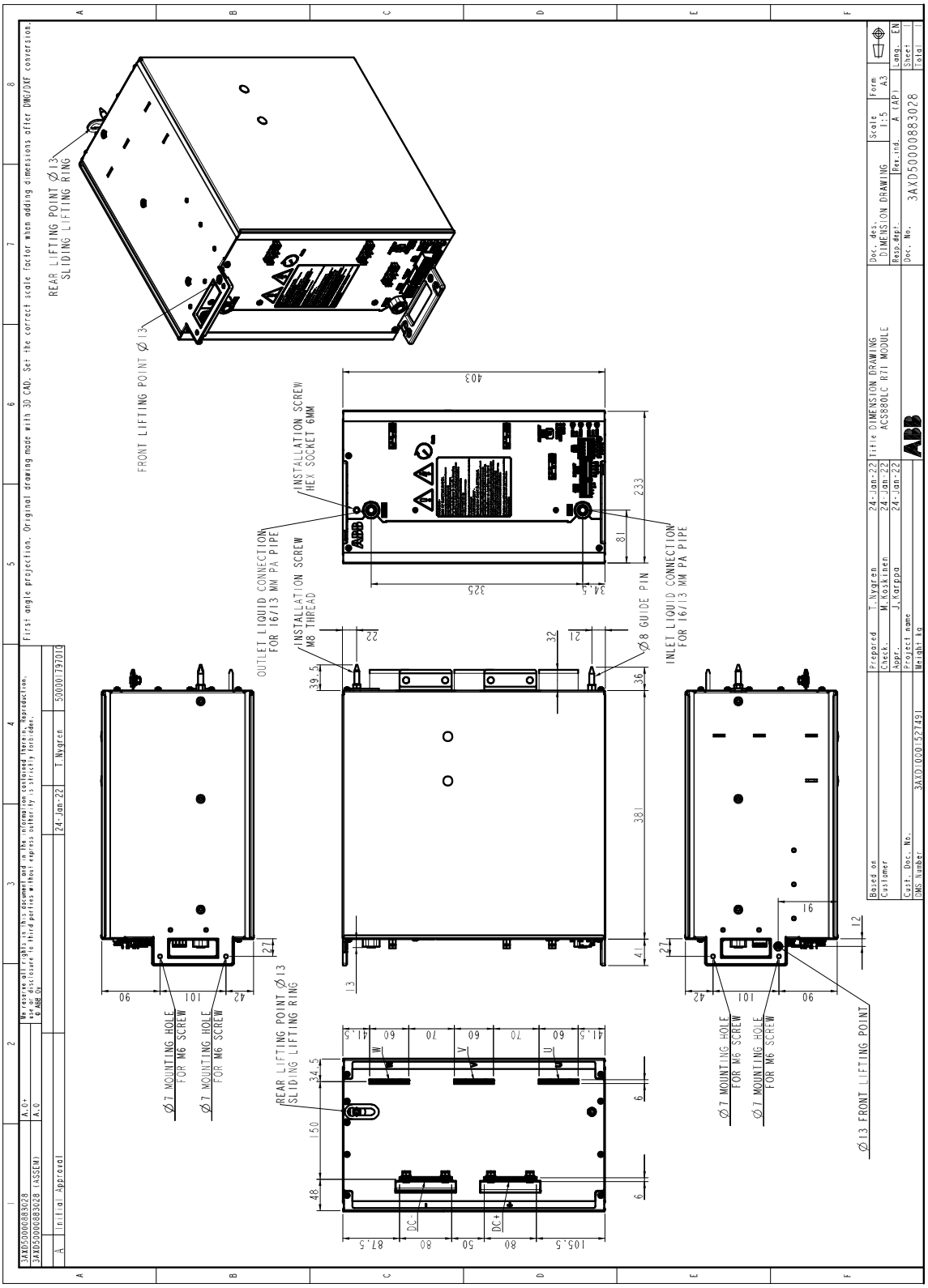

Installation frame for a module in upright position

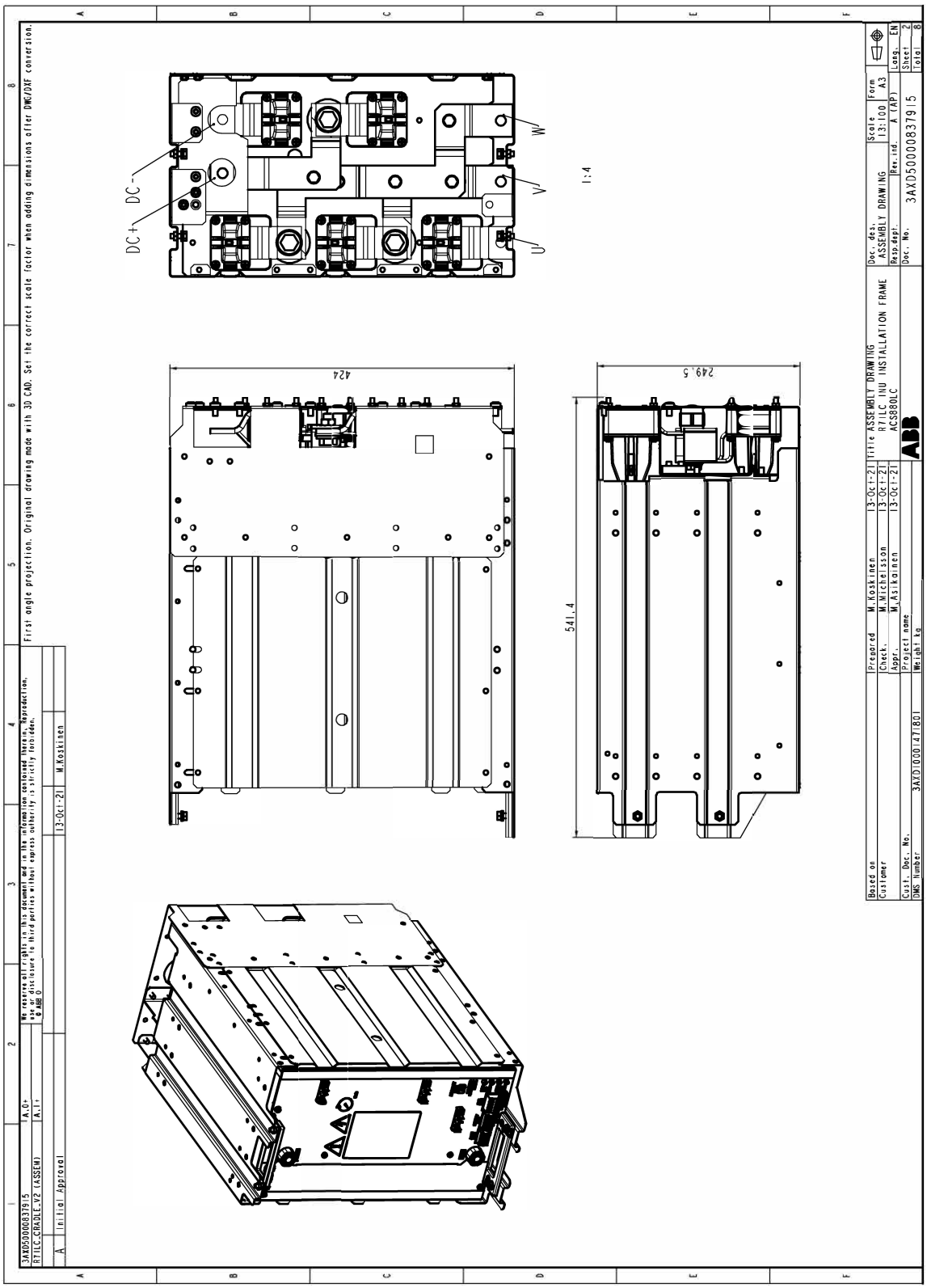

Installation frame for a module on its side

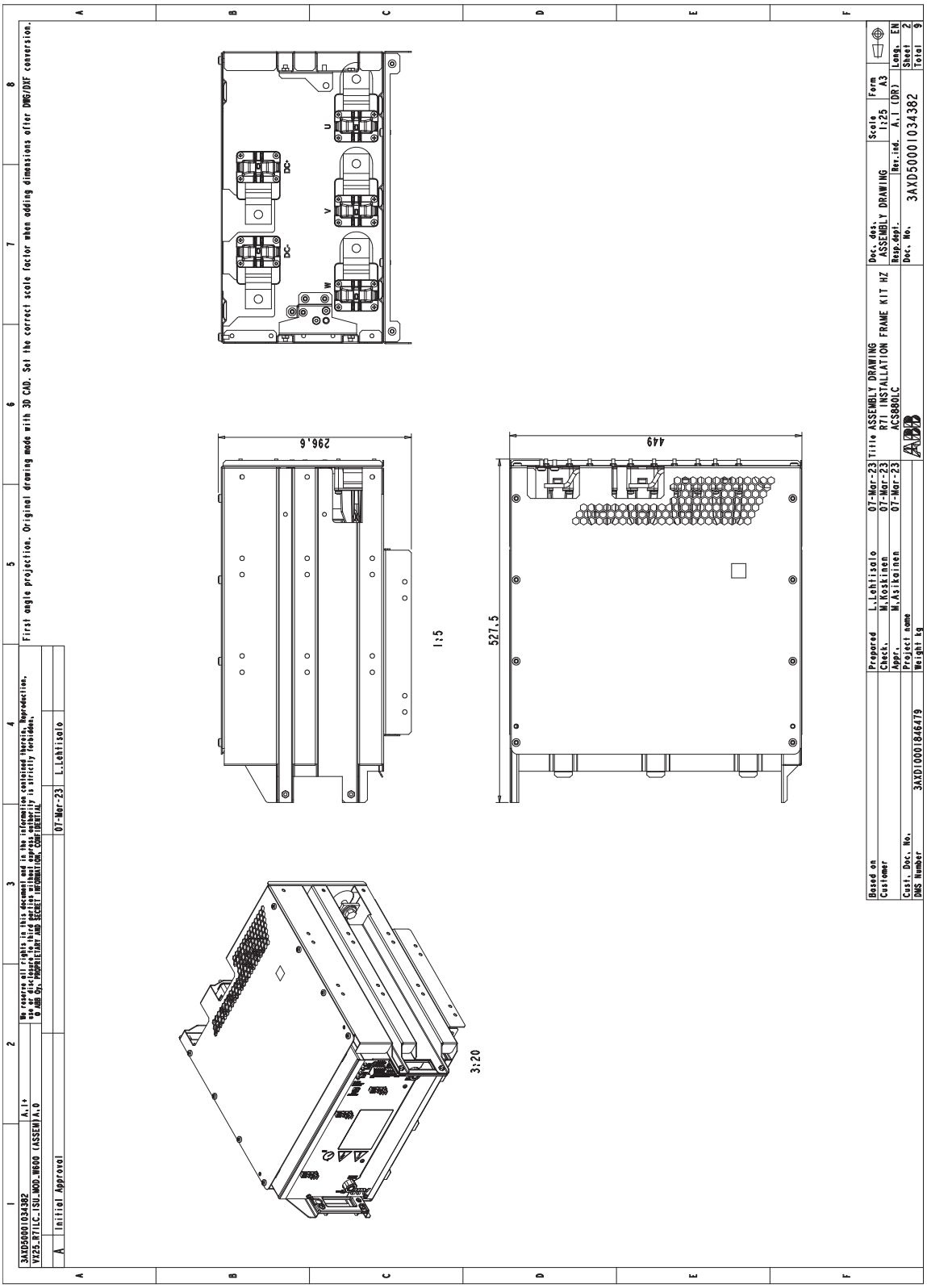

Frame R8i module

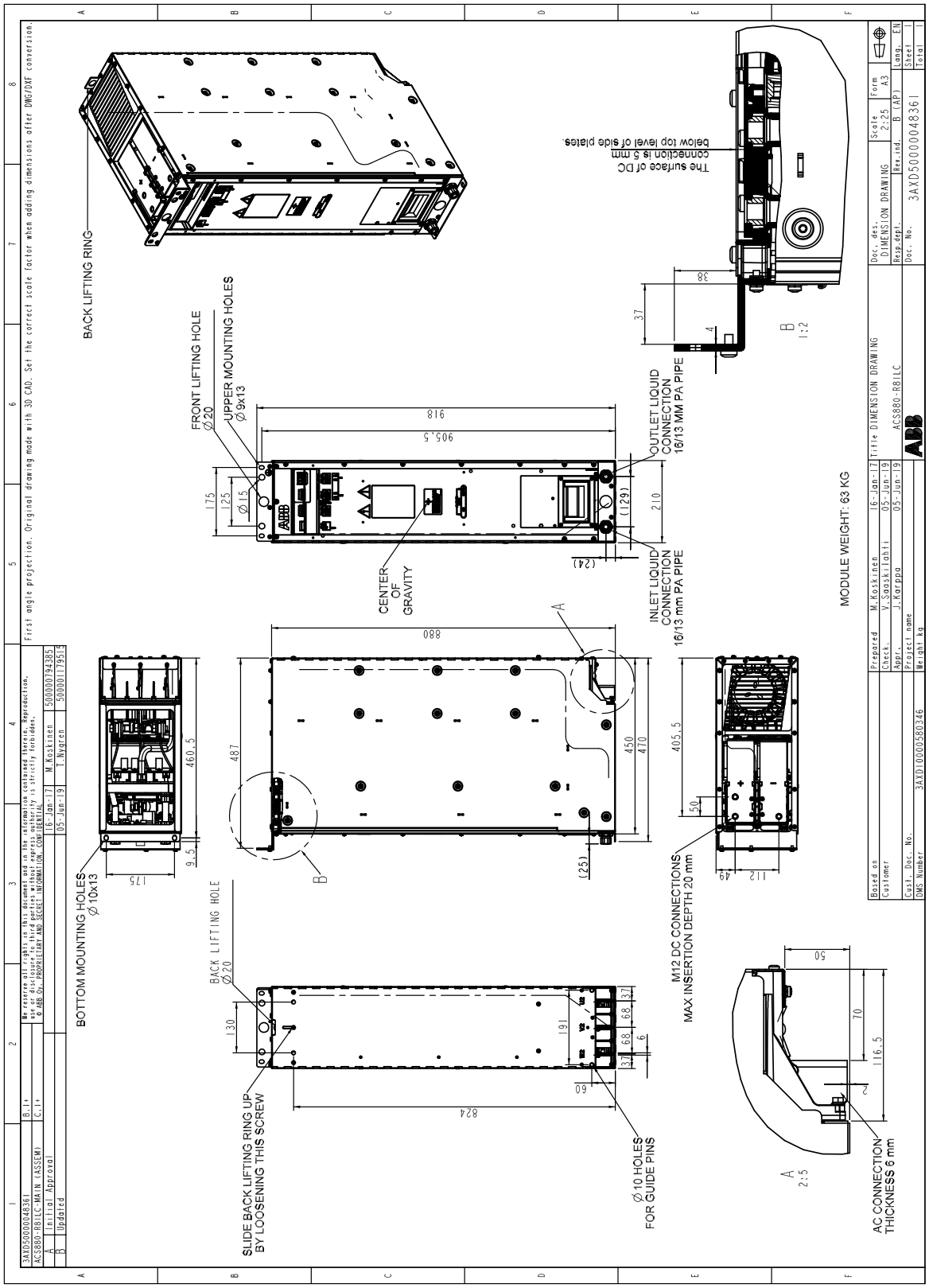

Quick connector

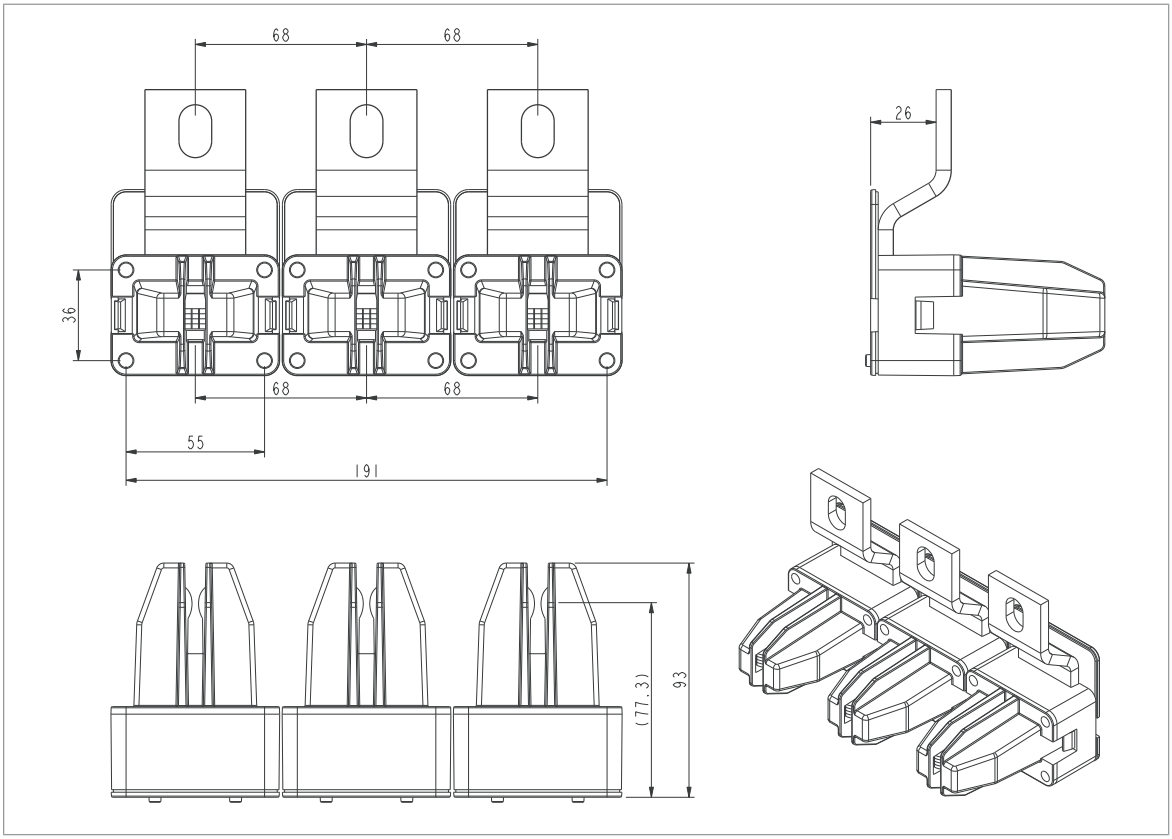

LCL filter components

BLCL-13LC-7, chokes

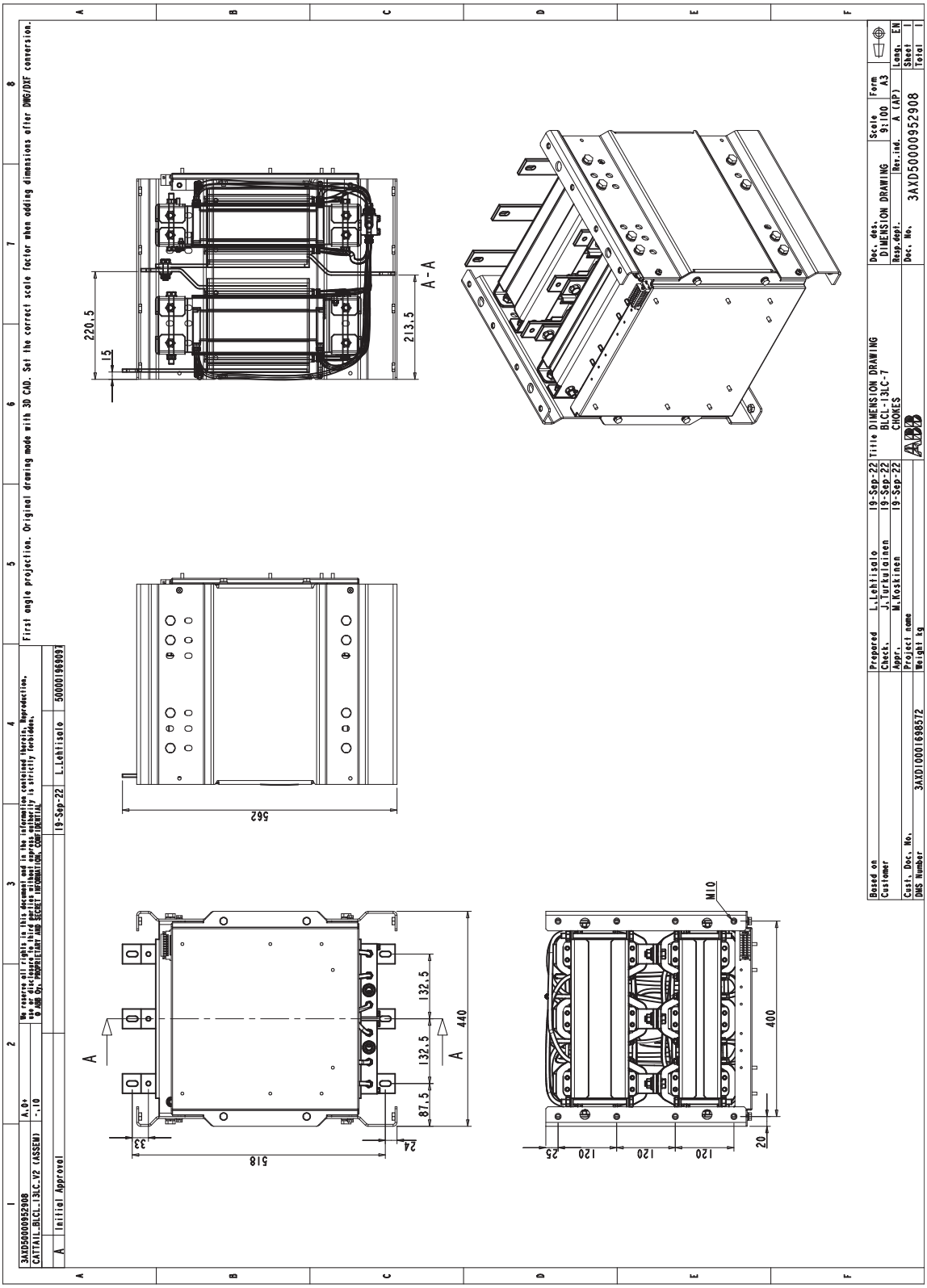

BLCL-13LC-7, chokes and capacitors

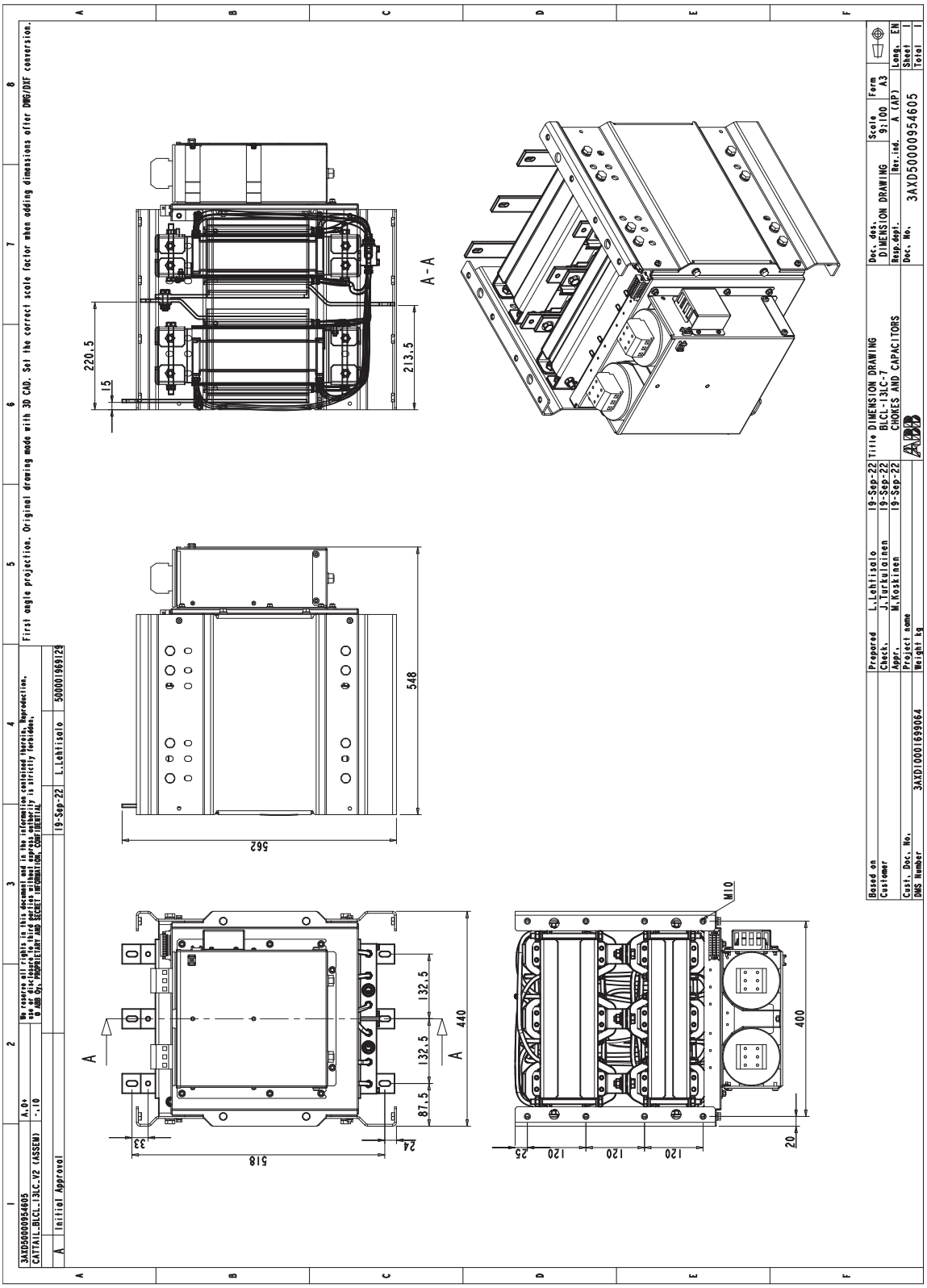

BLCL-14LC-5, chokes

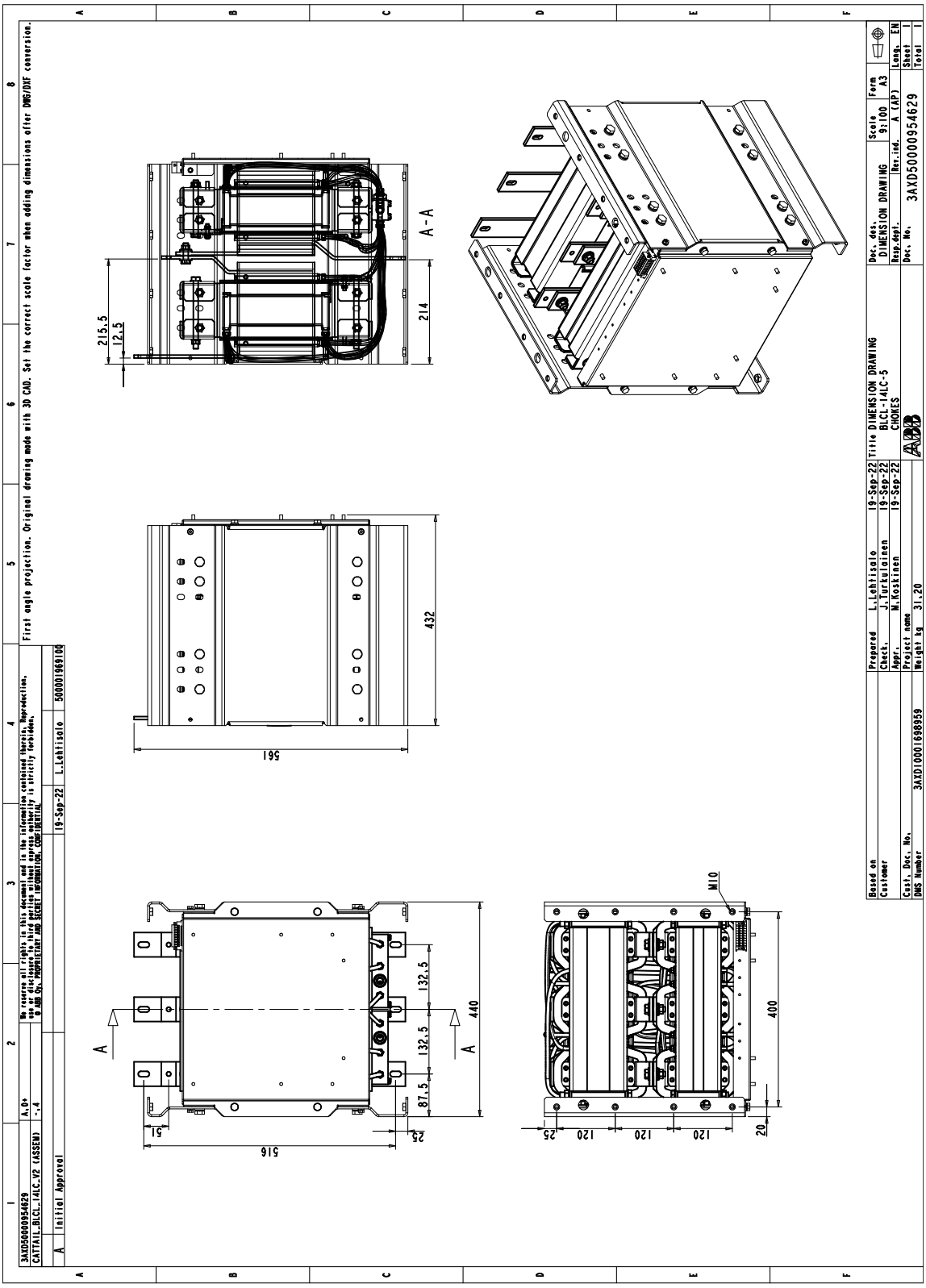

BLCL-14LC-5, chokes and capacitors

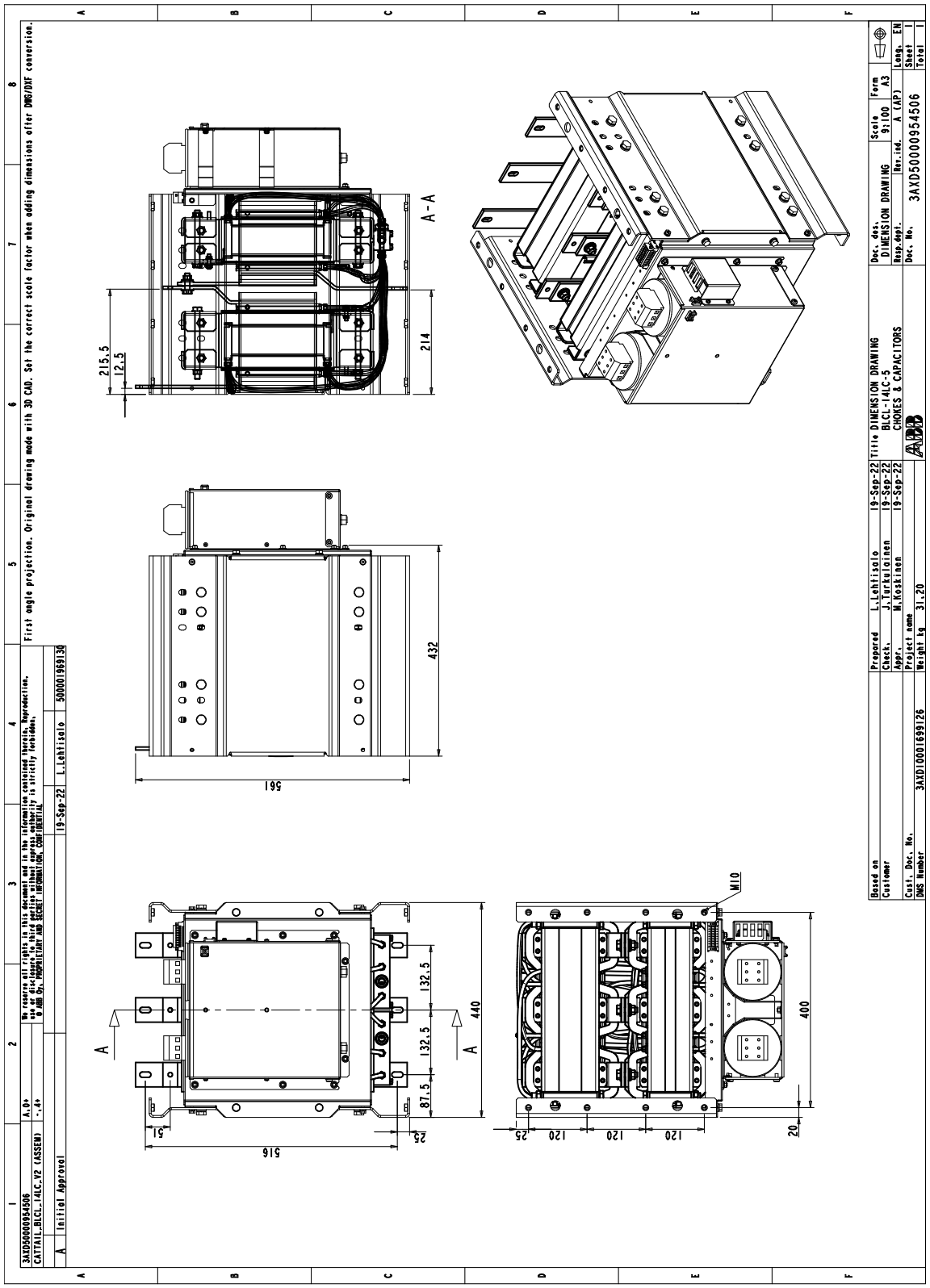

Grid-side choke (BLCL-15LC-7 and BLCL-24LC-7)

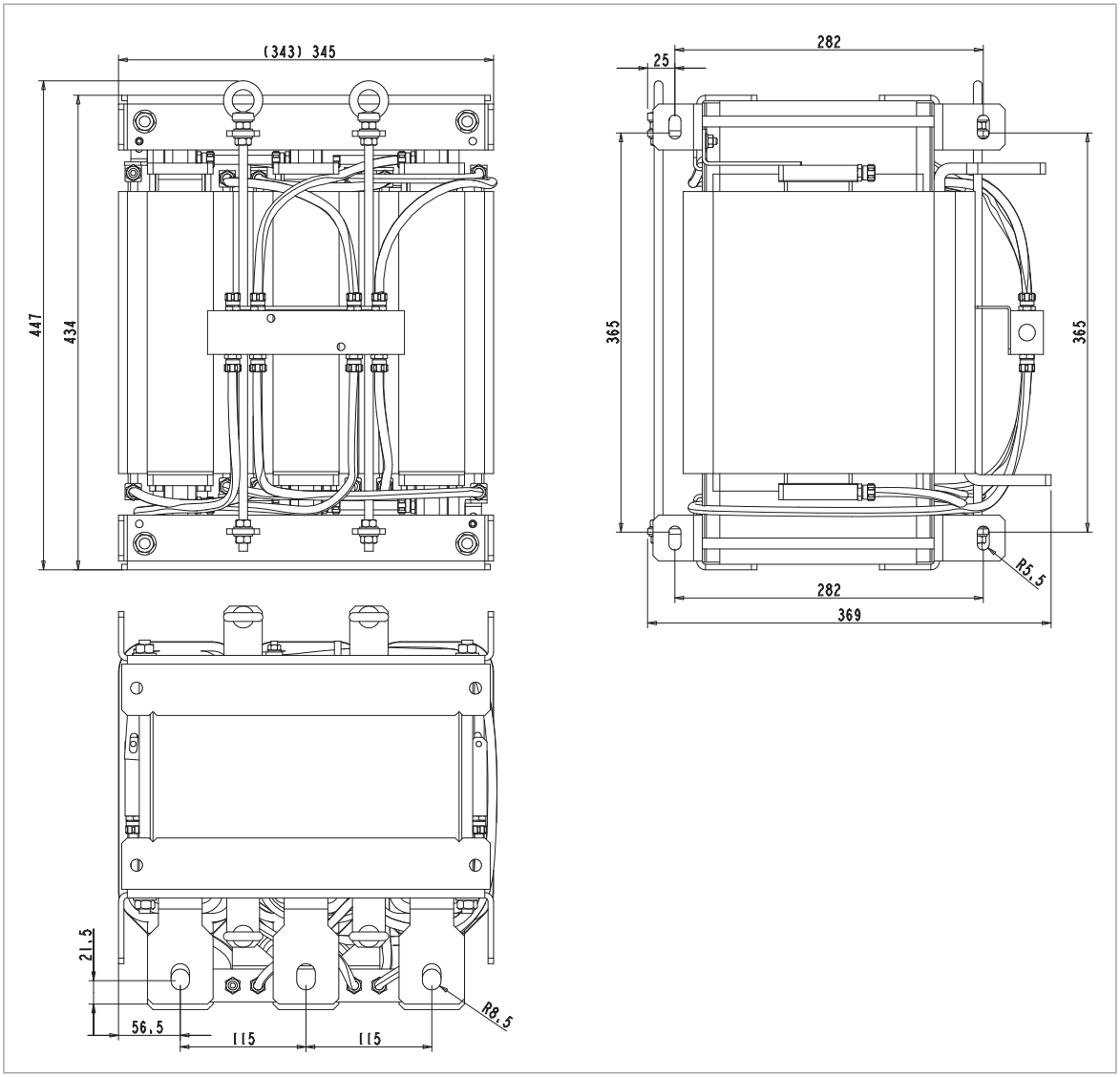

Grid-side choke (BLCL-25LC-7)

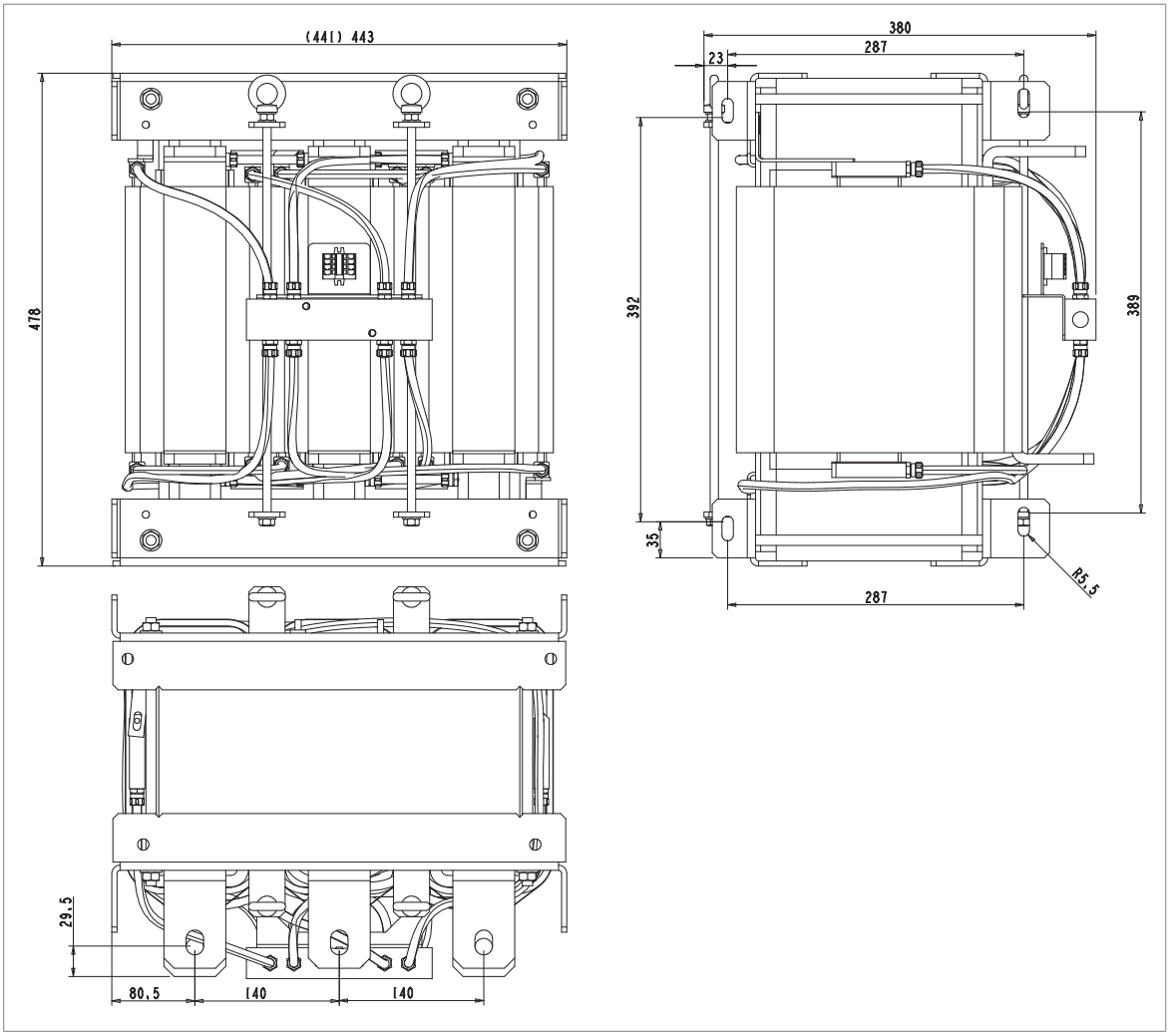

Converter-side choke (BLCL-15LC-7 and BLCL-24LC-7)

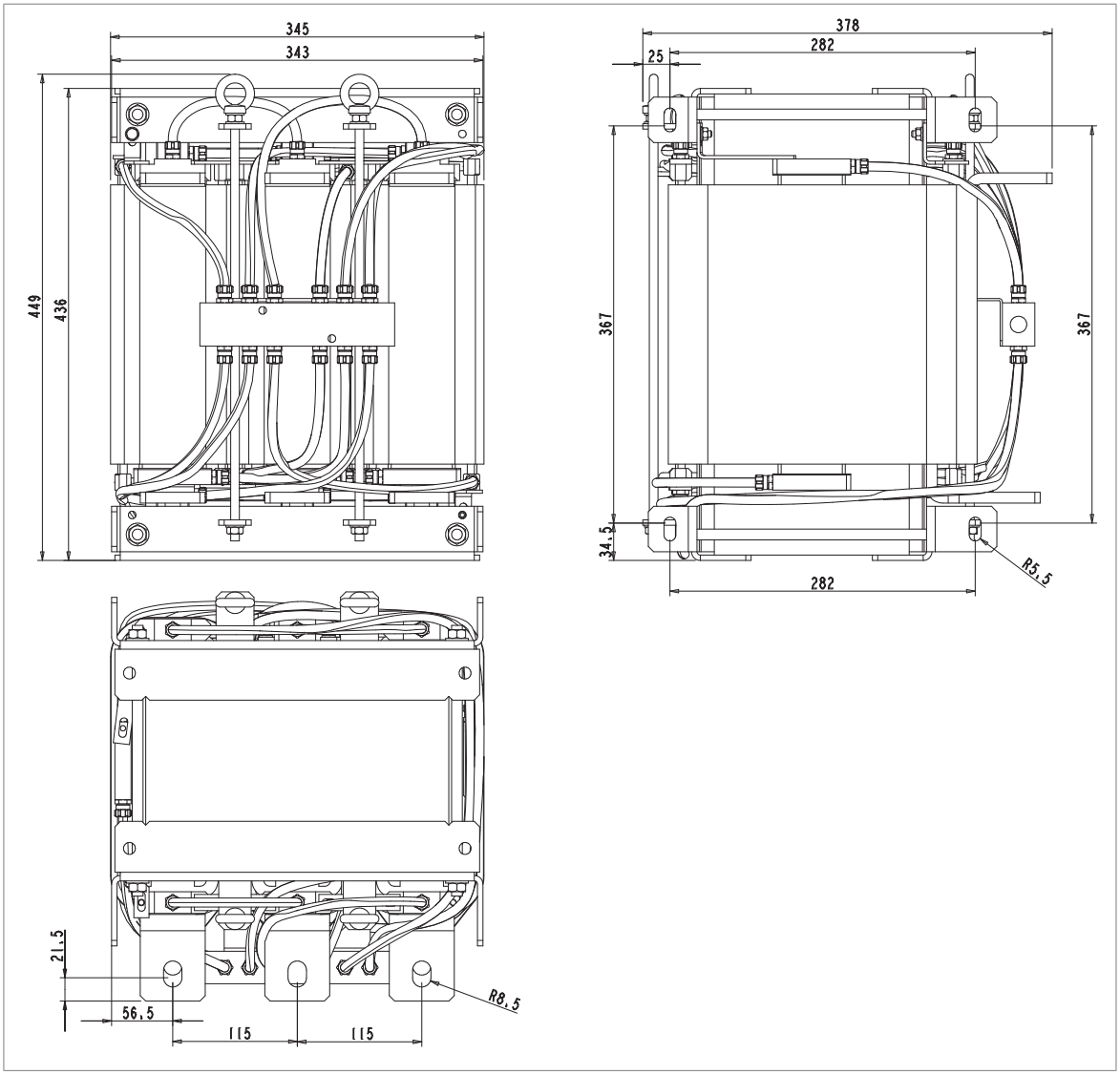

Converter-side choke (BLCL-25LC-7)

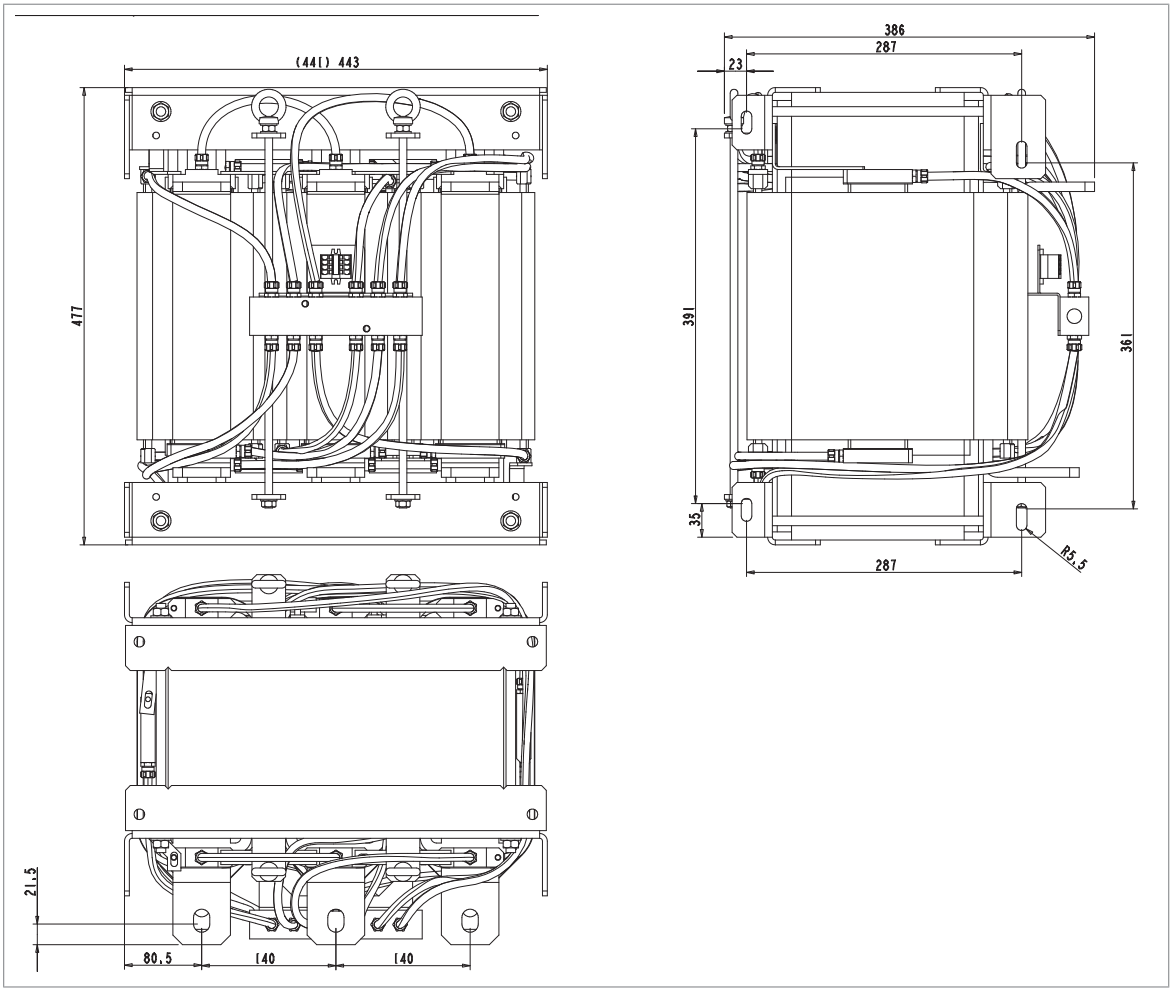

Capacitor (BLCL-15LC-7, BLCL-24LC-7, BLCL-25LC-7)

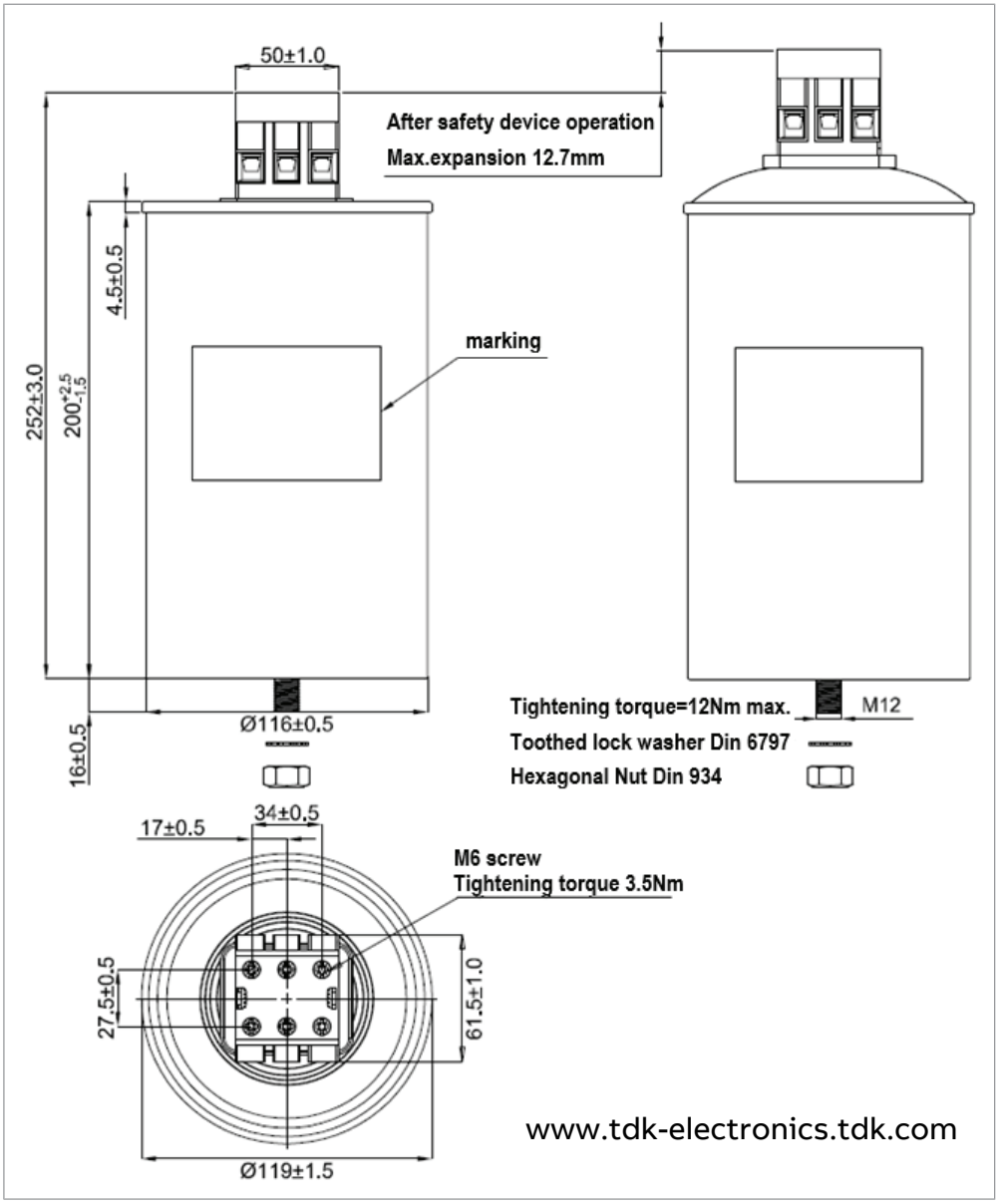

Control electronics

For dimension drawings of optional modules and devices, refer to their documentation.

BCU control unit

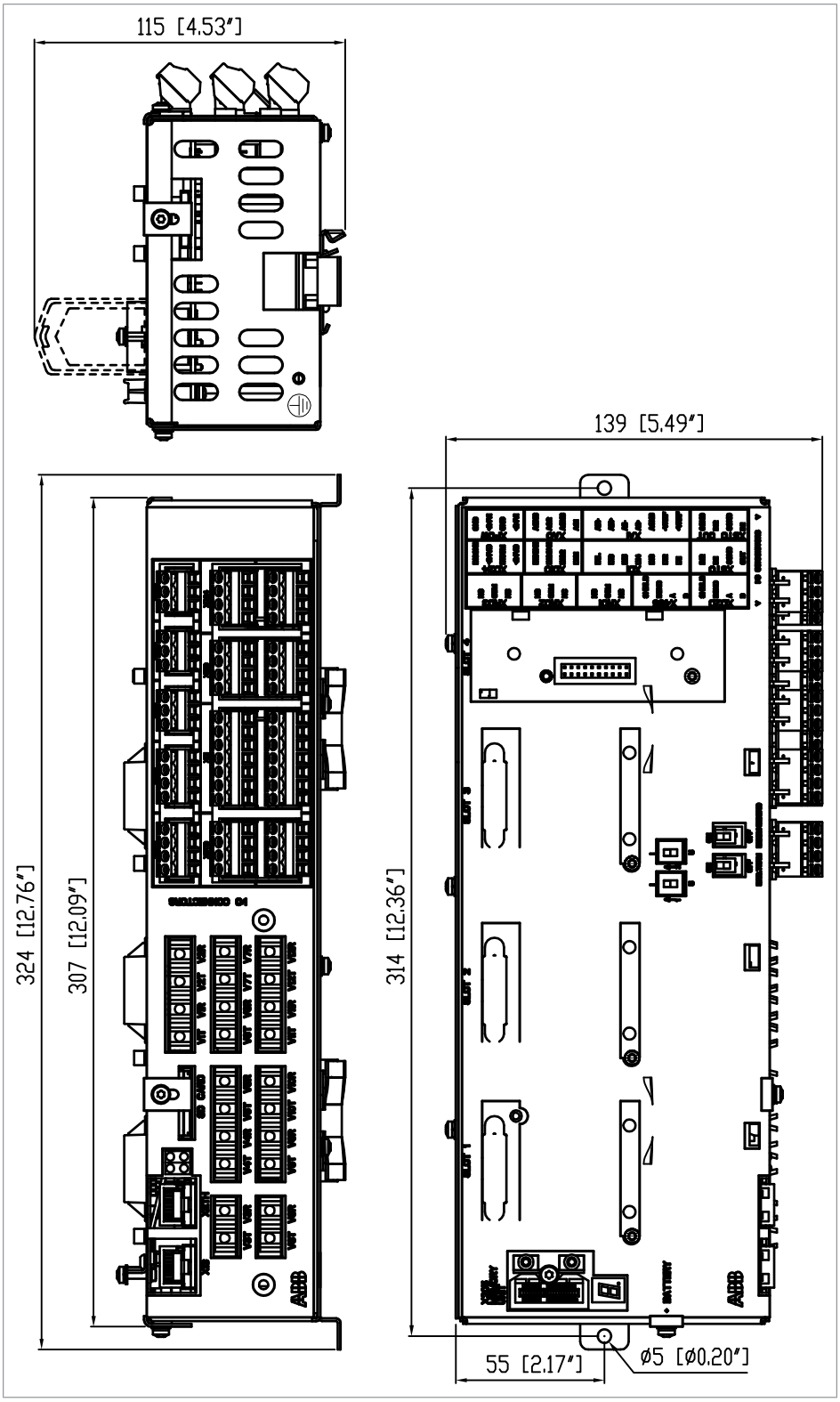

UCU control unit

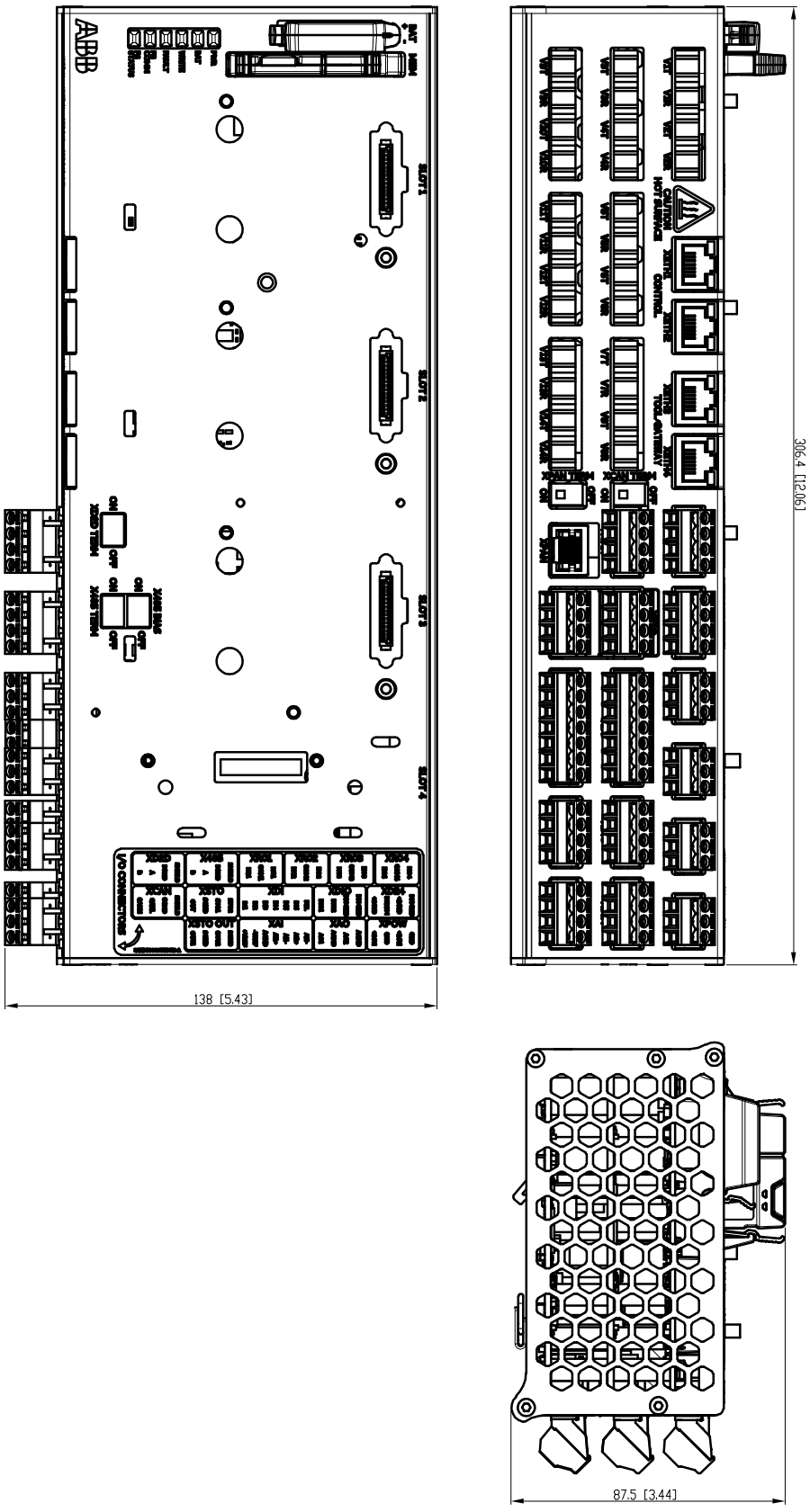

DPMP-01 door mounting kit

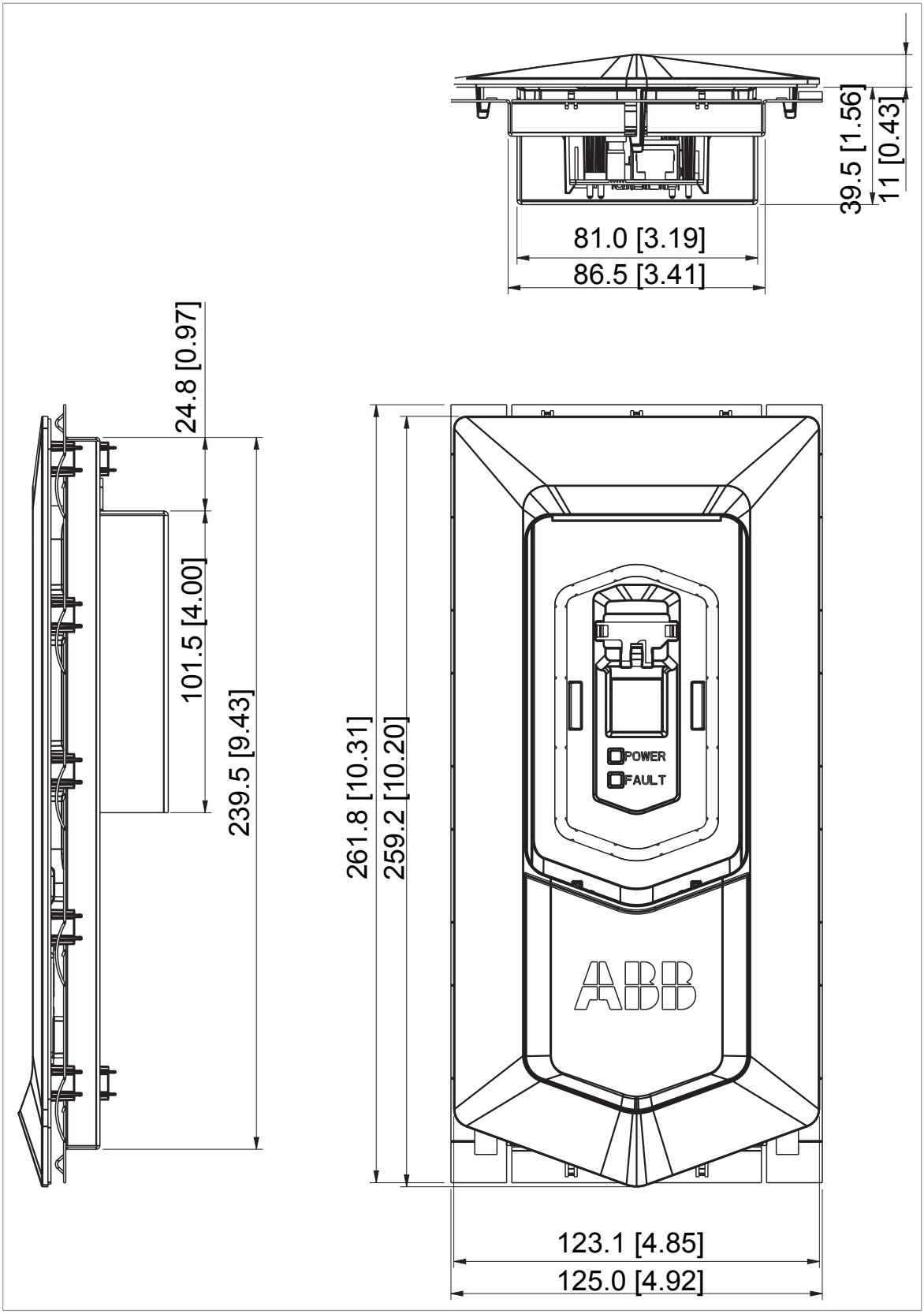

Main switch-disconnectors

OT1000E12

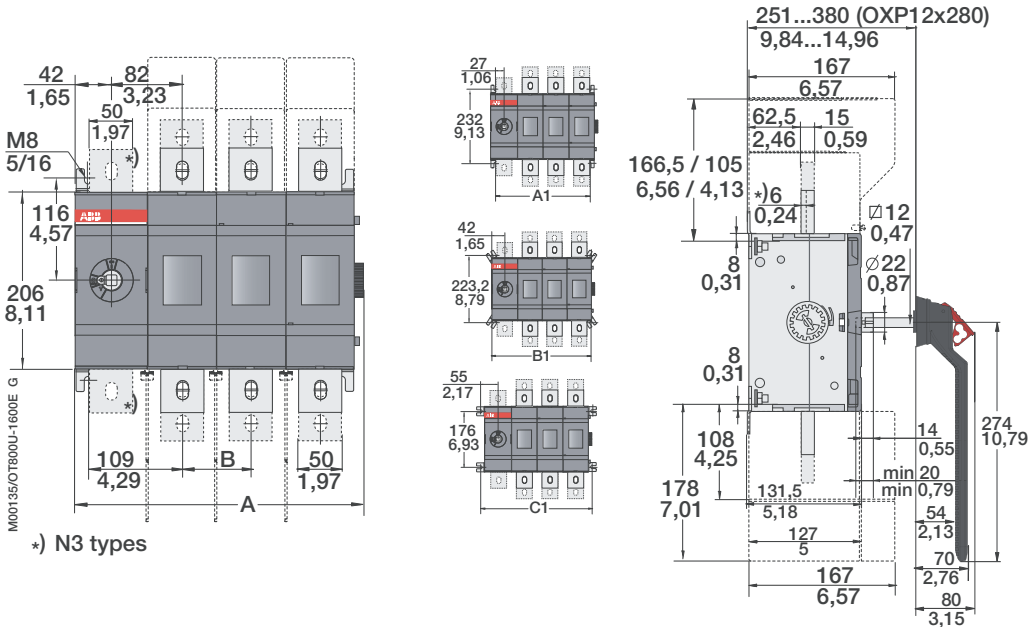

A mm (in)	B mm (in)	A1 mm (in)	B1 mm (in)	C1 mm (in)
334.50 (13.17)	80 (3.15)	294 (11.57)	324 (12.76)	350 (13.78)

OT800U12

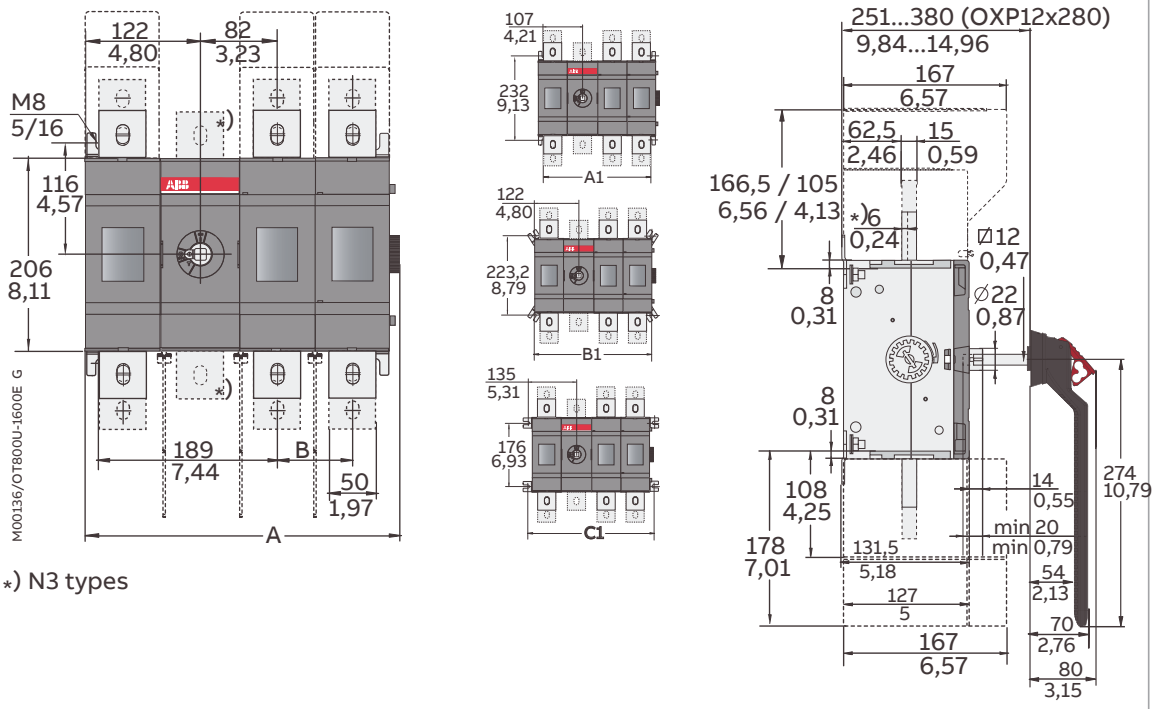

*) N3 types

A mm (in)	B mm (in)	A1 mm (in)	B1 mm (in)	C1 mm (in)
334.50 (13.17)	80 (3.15)	294 (11.57)	324 (12.76)	350 (13.78)

Main contactors

AF400

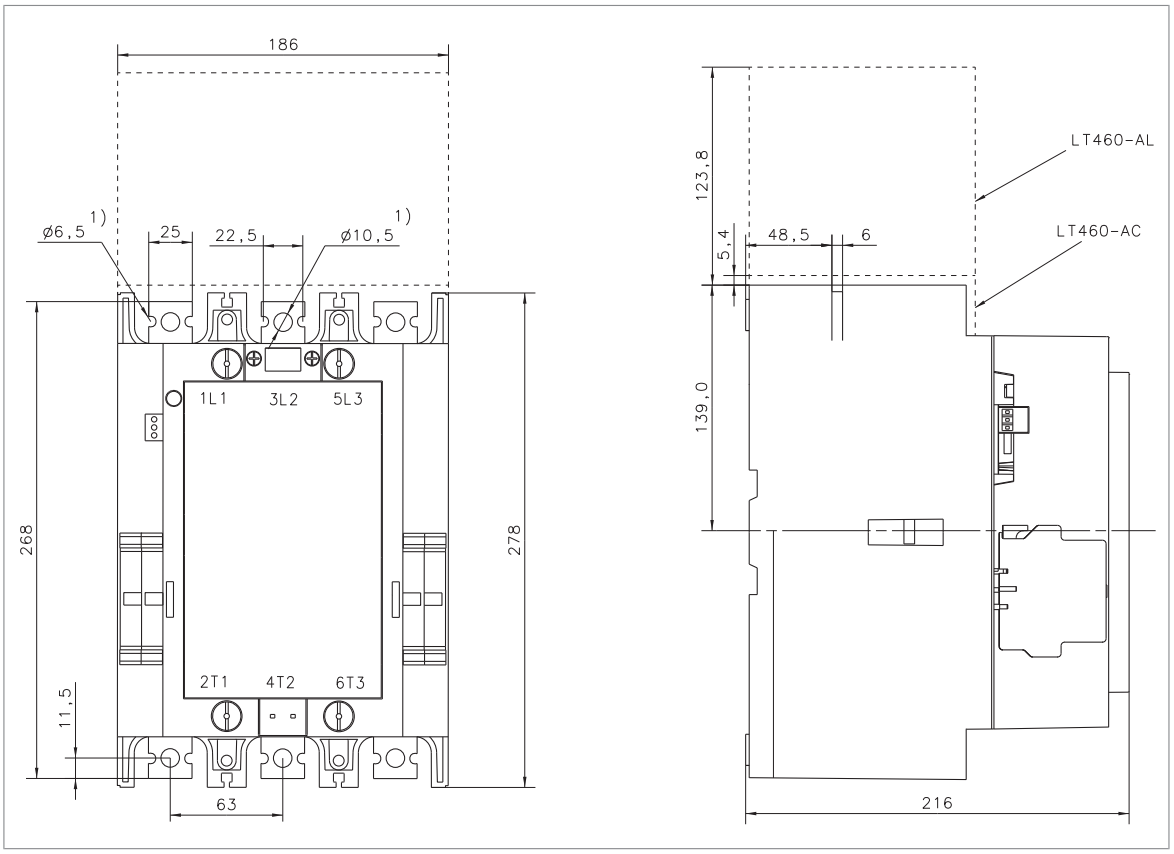

Main circuit breakers

E2.2S-A (UL/CSA)

E2.2 B-A, N-A, S-A, H-A, V-A 250A - 2000A

HR

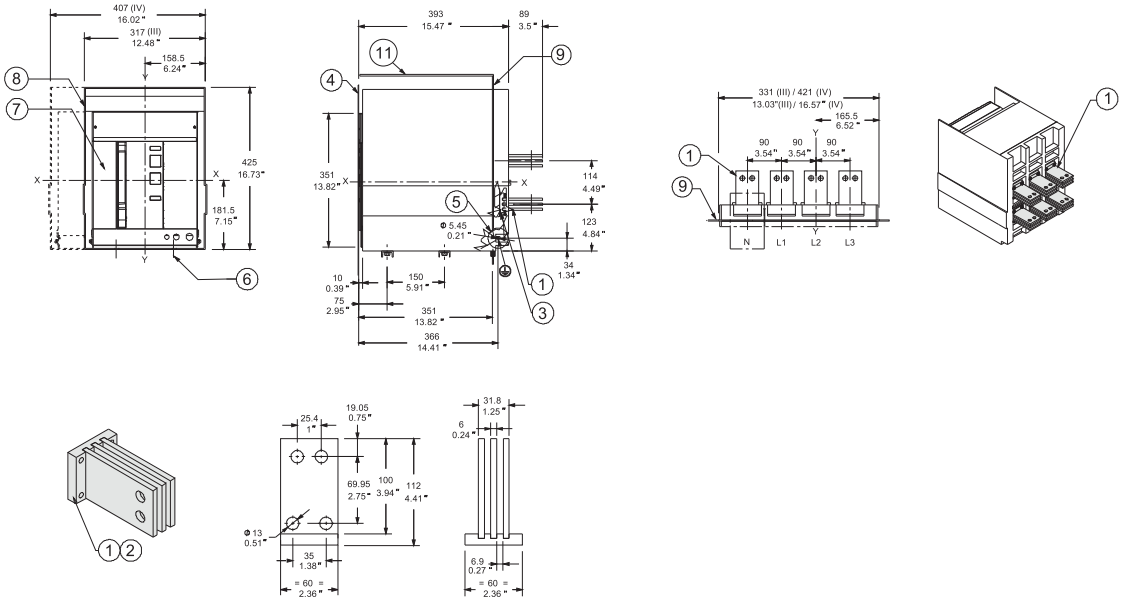

1	Horizontal terminals 1600 A - 2000 A	7	Moving part
2	Vertical terminals 1600 A - 2000 A (not in use in the design presented in this manual)	8	Fixed part
3	Tightening torque 8.6 N·m (76 lbf·in)	9	Segregation
4	Door position	10	Connected, test, disconnected distances
5	Grounding	11	Roof insulation or insulated material
6	Mounting fixed part screws		

E4.2S-A (UL/CSA)

E4.2 S-A, H-A, V-A 800A - 2500A

HR

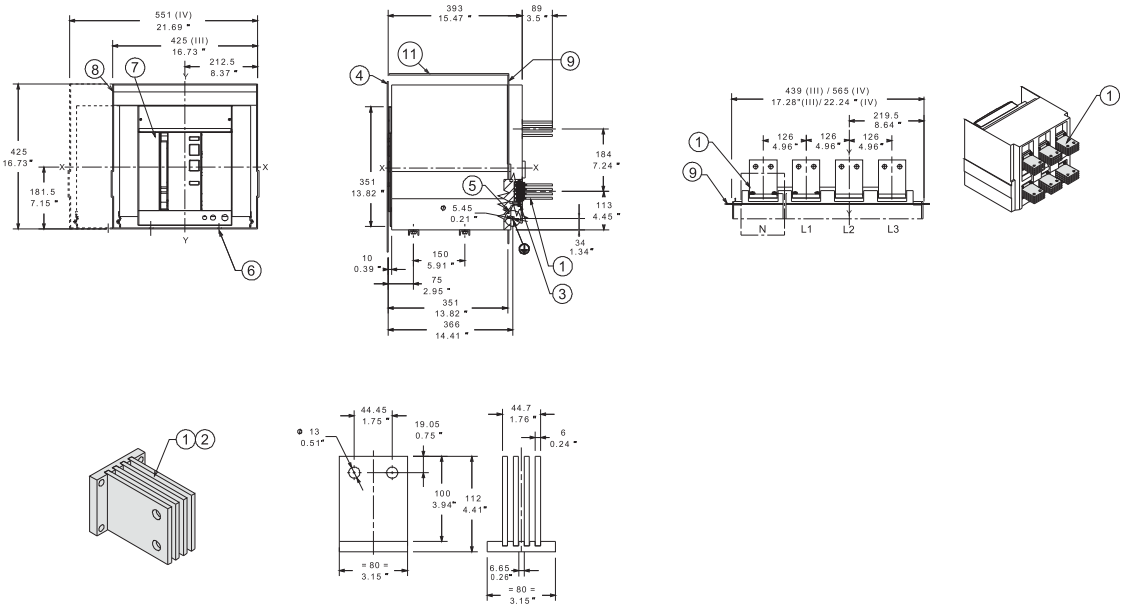

1	Horizontal terminals 2500 A	7	Moving part
2	Vertical terminals 2500 A (not in use in the design presented in this manual)	8	Fixed part
3	Tightening torque 20 N·m (177 lbf·in)	9	Segregation
4	Door position	10	Connected, test, disconnected distances
5	Grounding	11	Roof insulation or insulated material
6	Mounting fixed part screws		

Fuse blocks (Bussmann)

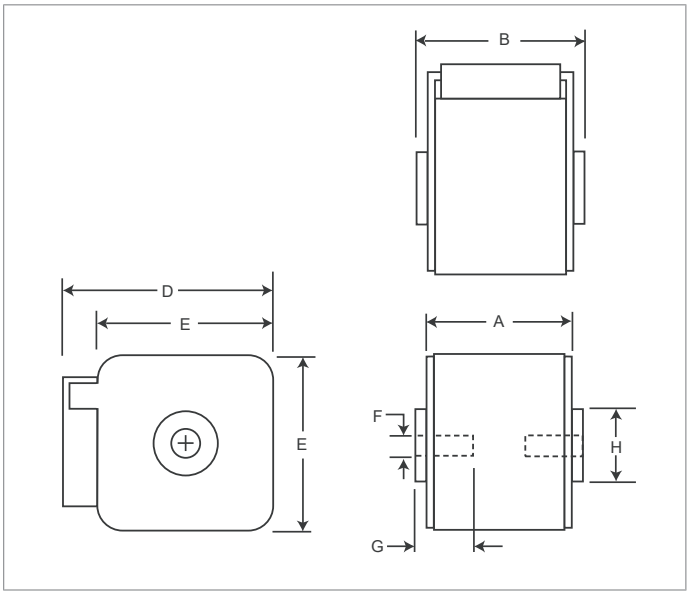

1000…1250 V fuses (as used with 690 V units)							
Size	**A** mm (inch)	**B** mm (inch)	**D** mm (inch)	**E** mm (inch)	**F**	**G** mm (inch)	**H** mm (inch)
1*	74 (2.91)	75 (2.95)	59 (2.32)	45 (1.77)	M8	5 (0.20)	17 (0.67)
1	74 (2.91)	75 (2.95)	69 (2.72)	53 (2.09)	M8	8 (0.31)	20 (0.79)
3	81 (3.19)	83 (3.27)	92 (3.62)	76 (2.99)	M12	10 (0.39)	30 (1.18)
3*	81 (3.19)	91 (3.58)	92 (3.62)	76 (2.99)	M12	10 (0.39)	30 (1.18)

Fuses of type 170M70xx

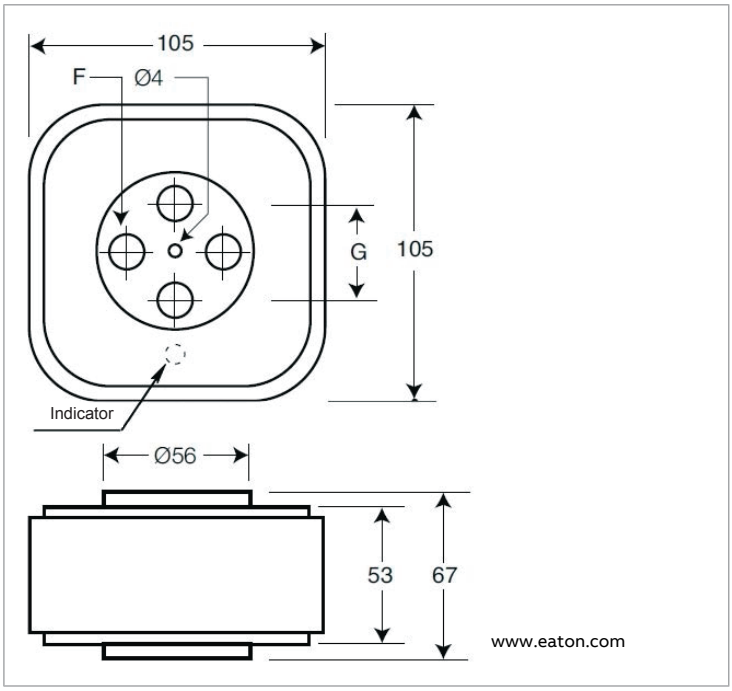

Size	F	G mm (inch)
4B	M10	33 (1.30)

14

Example circuit diagrams

Contents of this chapter

This chapter contains example circuit diagrams of an IGBT supply module.

Note: These diagrams do not necessarily match the installation-specific circuit diagrams of a tailor-made cabinet-installed unit.

The purpose of these diagrams is to help in:

- understanding the internal connections and operation of the cabinet-installed drive with an IGBT supply unit, and
- learning how to wire an (ACS880-204LC) IGBT supply module when installed in a user-defined cabinet.

Contents of example circuit diagrams

- **ACS880-204LC IGBT supply unit 1×R7i (3AXD10001871893)**

- IGBT supply module
- LCL filter
- main switch-disconnector
- main contactor
- main charging circuit
- DC switch-disconnector
- DC charging circuit
- internal auxiliary voltage supply
- control unit
- cabinet cooling fans

- control panel, panel mounting kit
- BAMU auxiliary measurement unit
- optimal grid control functionality (option +N8053).

ACS880-204LC IGBT supply unit 2×R8i (3AXD10000695767)

- IGBT supply module
- LCL filter
- main circuit breaker
- main charging circuit
- DC switch
- DC charging circuit
- internal auxiliary voltage supply
- control unit
- cabinet cooling fans
- control panel, panel mounting kit.

ACS880-204LC IGBT supply unit 4×R8i (3AXD10000695768)

- IGBT supply module
- LCL filter
- main circuit breaker
- main charging circuit
- DC switch
- DC charging circuit
- internal auxiliary voltage supply
- control unit
- cabinet cooling fans
- control panel, panel mounting kit
- CIO-01 module for distributed I/O bus control.

Frame 1×R7i

Example Circuit Diagrams
Project type
ACS880-204LC
Converter type
IGBT Supply Unit
R7i
Frame Size
ACS880-204LC-350A-7
Type Code
Revision A
Used EPLAN version: 2023.0.3.19491
Prep. Joni Tuomi 29.6.2023
App. Mika Asikainen 29.6.2023
Project ACS880-204LC R7i
Cust. Doc. No.
Cust. Ref. No.
Customer Example Circuit Diagrams
Title Title page / cover sheet
IGBT Supply Unit
ACS880-204LC-350A-7
SAP Doc. No. 3AXD10001871893
EPLAN Doc. No.
ABB Ref. No.
Resp. Dept.
Item Des.
=
+
Rev. A Sheet 000A
Cont. 000B

Higher-level function	Page	Page description	Revision
	000A	Title page / cover sheet	A
	000C	Structured identifier overview	A
	000D	Summarized parts list	A
	000E	Summarized parts list	A
	000F	Summarized parts list	A
	200A	Overview diagram	A
	300A	Symbol Overview	A
01	001a	MAIN CIRCUIT	A
	001b	MAIN CIRCUIT	A
	001c	CHARGING CIRCUIT	A
	002a	LCL FILTER	A
	003a	MAIN CIRCUIT	A
	004a	CHARGING CIRCUIT	A
	005a	MODULE CONTROL CONNECTIONS	A
	007a	CURRENT AND VOLTAGE MEASUREMENT	A
	020a	AUXILIARY VOLTAGE DISTRIBUTION	A
	021a	AUXILIARY VOLTAGE DISTRIBUTION	A
	022a	CONTROL VOLTAGE DISTRIBUTION	A
	026a	CABINET FAN CONTROL	A
	030a	MAIN BREAKER CONTROL	A
	050a	CONTROL UNIT	A
	050b	CONTROL UNIT	A
	050c	CONTROL UNIT	A
	050d	CONTROL UNIT	A
	051a	OPTION CARDS	A

Cust. Doc. No.	Prep. Joni Tuomi 29.6.2023	Title Table of contents IGBT Supply Unit ACS880-204LC-350A-7		Item Des.
Cust. Ref. No.	App. Mika Asikainen 29.6.2023		SAP Doc. No. 3AXD10001871893	=
Customer Example Circuit Diagrams	Project ACS880-204LC R7i		EPLAN Doc. No.	+
		ABB	ABB Ref. No.	Rev. A Sheet 000B
			Resp. Dept.	Cont. 000C

Function designations

Designation	Structure description
=01	IGBT Supply Unit

Location designations

Designation	Structure description
+01.1	Auxiliary Control Cubicle (External)
+01.2	Incoming Cubicle (External)
+01.3	IGBT Supply Cubicle

Electrical option designations

Designation	Material Code	Quantity
#BAMU	3AXD50000045879	1
#CIO I/O Module	3AXD50000041983	1
#CMF Filter	3AXD50000566785	2
#Cabinet Fan	3AXD50000050763	1
#Charging Kit	3AXD50000250776, 3AXD50000826933	2
#Contactor	64399730	1
#Control Panel	3AXD50000025965	1
#Control Unit Kit	3AXD50000002937	1
#Fibre Optic	58988821, 58948233, 58948250	3
#Filter Unit Kit	3AXD50000896431	1
#Fuse	3AXD50000000246, 68735980	5
#Panel Interface	3AUA0000108650	1
#Panel mounting kit	3AUA0000108878	1
#Resistor	10028531	4
#Supply Module	ACS880-104LC-0389A-7	1
#Switch Kit	3AXD50001056292, 3AXD50000507078, 3AXD50000823376	3

Cust. Doc. No.	Prep. Joni Tuomi 29.6.2023	Title Structured identifier overview IGBT Supply Unit ACS880-204LC-350A-7		Item Des.	
Cust. Ref. No.	App. Mika Asikainen 29.6.2023		SAP Doc. No. 3AXD10001871893	=	
Customer Example Circuit Diagrams	Project ACS880-204LC R7i		EPLAN Doc. No.	+	
		ABB	ABB Ref. No.	Rev. A	Sheet 000C
			Resp. Dept.	Cont.	000D

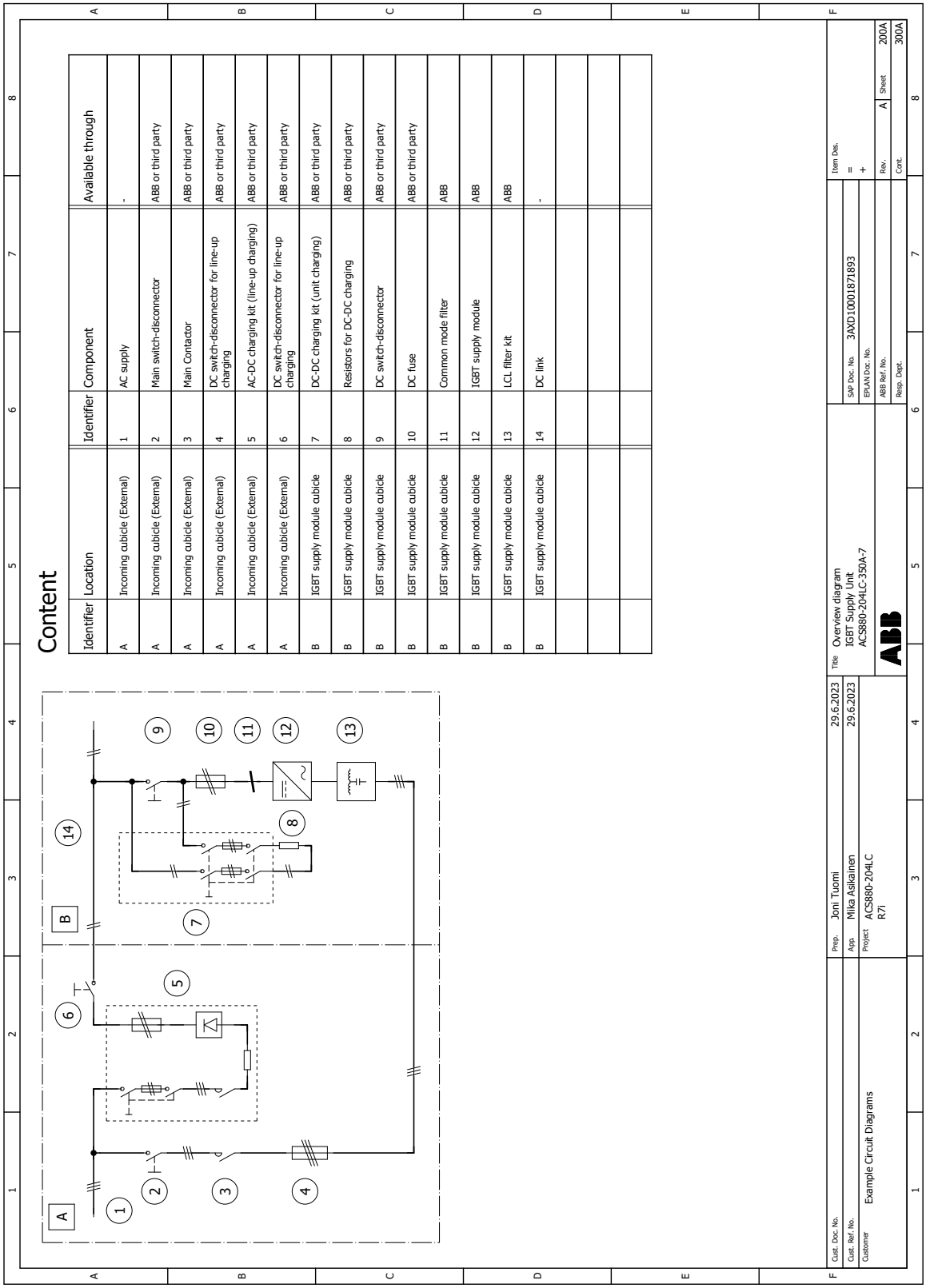

Content

Identifier	Location	Identifier	Component	Available through
A	Incoming cubicle (External)	1	AC supply	-
A	Incoming cubicle (External)	2	Main switch-disconnector	ABB or third party
A	Incoming cubicle (External)	3	Main Contactor	ABB or third party
A	Incoming cubicle (External)	4	DC switch-disconnector for line-up charging	ABB or third party
A	Incoming cubicle (External)	5	AC-DC charging kit (line-up charging)	ABB or third party
A	Incoming cubicle (External)	6	DC switch-disconnector for line-up charging	ABB or third party
B	IGBT supply module cubicle	7	DC-DC charging kit (unit charging)	ABB or third party
B	IGBT supply module cubicle	8	Resistors for DC-DC charging	ABB or third party
B	IGBT supply module cubicle	9	DC switch-disconnector	ABB or third party
B	IGBT supply module cubicle	10	DC fuse	ABB or third party
B	IGBT supply module cubicle	11	Common mode filter	ABB
B	IGBT supply module cubicle	12	IGBT supply module	ABB
B	IGBT supply module cubicle	13	LCL filter kit	ABB
B	IGBT supply module cubicle	14	DC link	-

Cust. Doc. No.
Cust. Ref. No.
Customer: Example Circuit Diagrams

Prep. Joni Tuomi 29.6.2023
Appr. Mika Asikainen 29.6.2023
Project: ACS880-204LC R7i

Title: Overview diagram IGBT Supply Unit ACS880-204LC-350A-7

SAP Doc. No. 3AXD10001871893
EPLAN Doc. No.
ABB Ref. No.
Resp. Dept.

Item Des. = +
Rev. A Sheet 200A
Cont. 300A

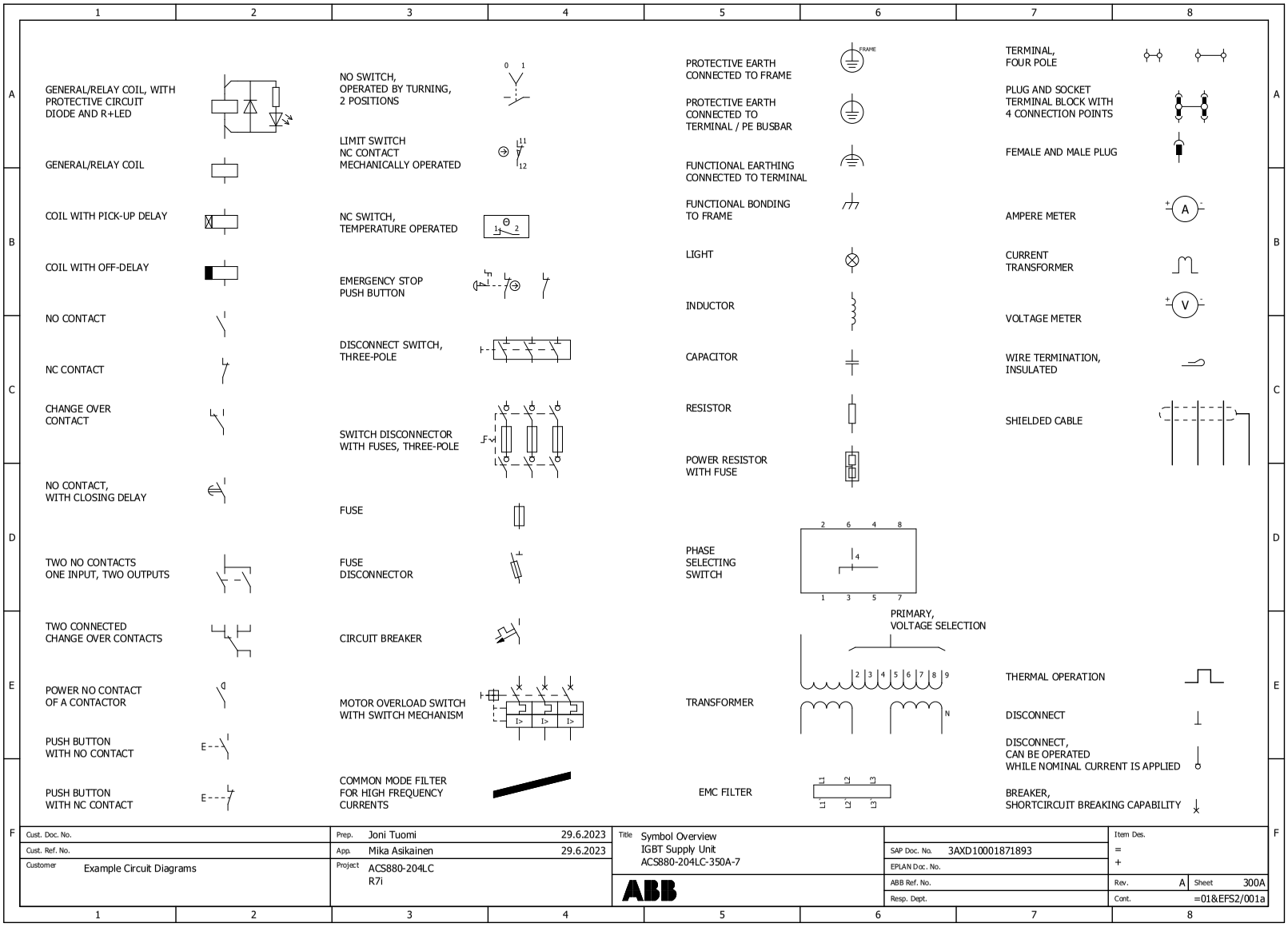
GENERAL/RELAY COIL, WITH PROTECTIVE CIRCUIT DIODE AND R+LED
GENERAL/RELAY COIL
COIL WITH PICK-UP DELAY
COIL WITH OFF-DELAY
NO CONTACT
NC CONTACT
CHANGE OVER CONTACT
NO CONTACT, WITH CLOSING DELAY
TWO NO CONTACTS ONE INPUT, TWO OUTPUTS
TWO CONNECTED CHANGE OVER CONTACTS
POWER NO CONTACT OF A CONTACTOR
PUSH BUTTON WITH NO CONTACT
PUSH BUTTON WITH NC CONTACT
NO SWITCH, OPERATED BY TURNING, 2 POSITIONS
LIMIT SWITCH NC CONTACT MECHANICALLY OPERATED
NC SWITCH, TEMPERATURE OPERATED
EMERGENCY STOP PUSH BUTTON
DISCONNECT SWITCH, THREE-POLE
SWITCH DISCONNECTOR WITH FUSES, THREE-POLE
FUSE
FUSE DISCONNECTOR
CIRCUIT BREAKER
MOTOR OVERLOAD SWITCH WITH SWITCH MECHANISM
COMMON MODE FILTER FOR HIGH FREQUENCY CURRENTS
PROTECTIVE EARTH CONNECTED TO FRAME
PROTECTIVE EARTH CONNECTED TO TERMINAL / PE BUSBAR
FUNCTIONAL EARTHING CONNECTED TO TERMINAL
FUNCTIONAL BONDING TO FRAME
LIGHT
INDUCTOR
CAPACITOR
RESISTOR
POWER RESISTOR WITH FUSE
PHASE SELECTING SWITCH
PRIMARY, VOLTAGE SELECTION
TRANSFORMER
EMC FILTER
TERMINAL, FOUR POLE
PLUG AND SOCKET TERMINAL BLOCK WITH 4 CONNECTION POINTS
FEMALE AND MALE PLUG
AMPERE METER
CURRENT TRANSFORMER
VOLTAGE METER
WIRE TERMINATION, INSULATED
SHIELDED CABLE
THERMAL OPERATION
DISCONNECT
DISCONNECT, CAN BE OPERATED WHILE NOMINAL CURRENT IS APPLIED
BREAKER, SHORTCIRCUIT BREAKING CAPABILITY
Cust. Doc. No.
Cust. Ref. No.
Customer Example Circuit Diagrams
Prep. Joni Tuomi 29.6.2023
App. Mika Asikainen 29.6.2023
Project ACS880-204LC R7i
Title Symbol Overview IGBT Supply Unit ACS880-204LC-350A-7
SAP Doc. No. 3AXD10001871893
EPLAN Doc. No.
ABB Ref. No.
Resp. Dept.
Item Des.
Rev. A
Sheet 300A
Cont. =01&EFS2/001a

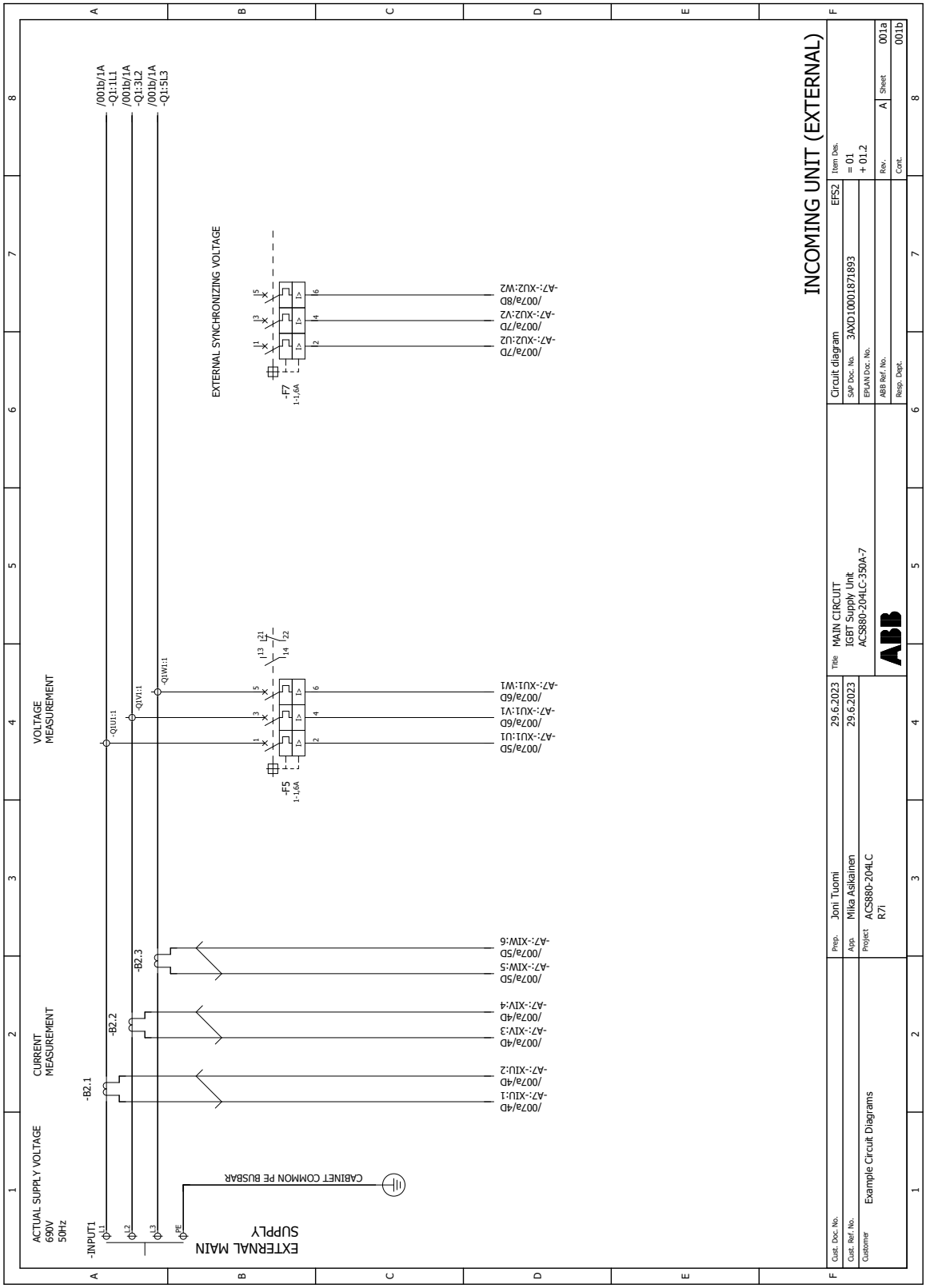
INCOMING UNIT (EXTERNAL)
EXTERNAL MAIN SUPPLY
ACTUAL SUPPLY VOLTAGE
690V
50Hz
CURRENT MEASUREMENT
VOLTAGE MEASUREMENT
EXTERNAL SYNCHRONIZING VOLTAGE
CABINET COMMON PE BUSBAR
-INPUT1
-B2.1
-B2.2
-B2.3
-F5
-F7
-Q1U1:1
-Q1V1:1
-Q1W1:1
/001b/1A
-Q1:1L1
/001b/1A
-Q1:3L2
/001b/1A
-Q1:5L3
Cust. Doc. No.
Cust. Ref. No.
Customer
Example Circuit Diagrams
Prep.
Joni Tuomi
29.6.2023
Appr.
Mika Asikainen
29.6.2023
Project
ACS880-204LC
R7i
Title
MAIN CIRCUIT
IGBT Supply Unit
ACS880-204LC-350A-7
Circuit diagram
EFS2
Item Des.
= 01
+ 01.2
SAP Doc. No.
3AXD10001871893
EPLAN Doc. No.
ABB Ref. No.
Resp. Dept.
Rev.
A
Sheet
001a
Cont.
001b

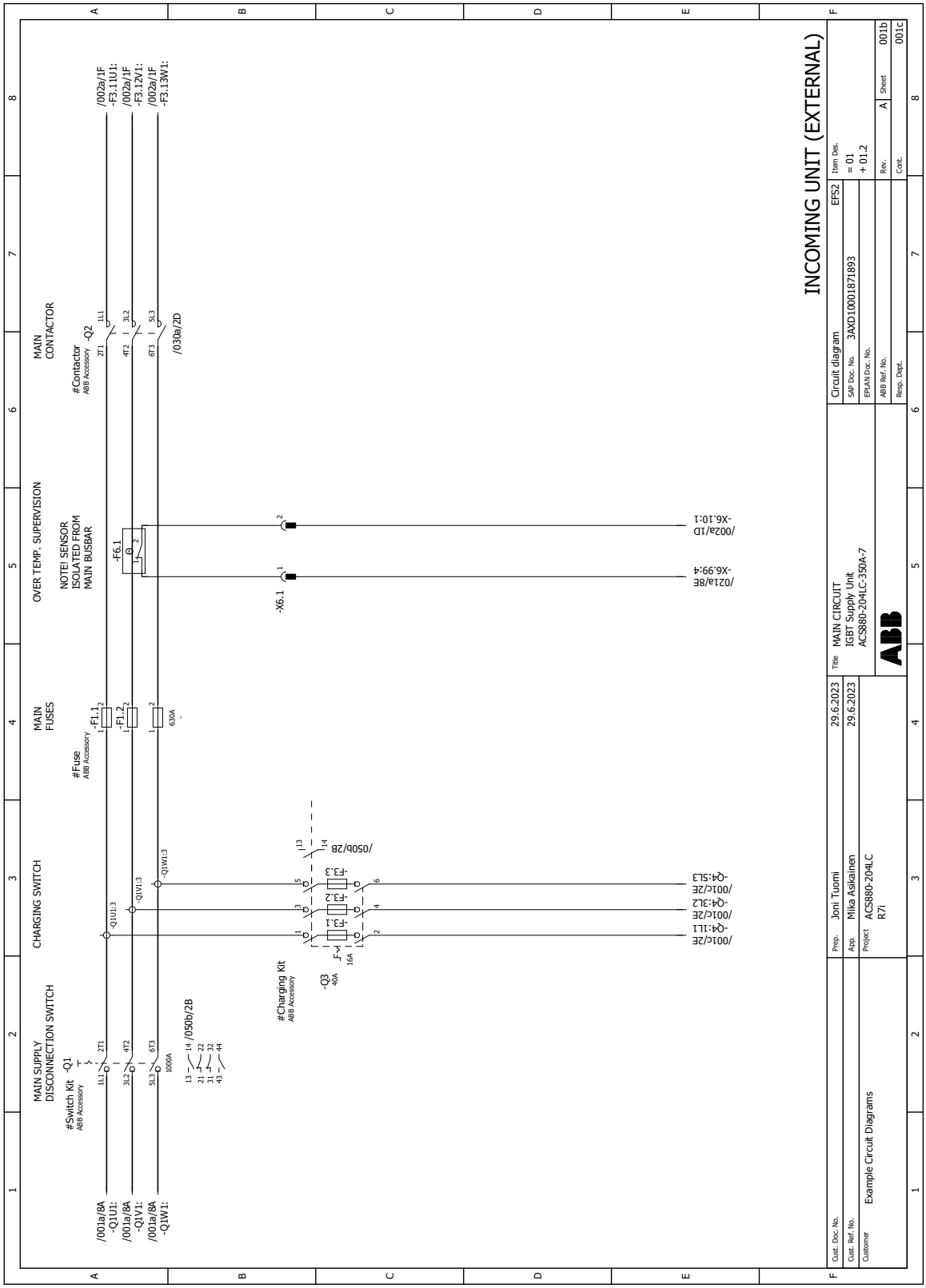
INCOMING UNIT (EXTERNAL)
MAIN SUPPLY DISCONNECTION SWITCH
CHARGING SWITCH
MAIN FUSES
OVER TEMP. SUPERVISION
MAIN CONTACTOR
NOTE! SENSOR ISOLATED FROM MAIN BUSBAR
#Switch Kit ABB Accessory
#Fuse ABB Accessory
#Contactor ABB Accessory
#Charging Kit ABB Accessory
-Q1
-Q2
-F1.1
-F1.2
-F6.1
-X6.1
-Q3 40A
16A
1000A
630A
/001a/9A -Q1U1:
/001a/9A -Q1V1:
/001a/9A -Q1W1:
/002a/1F -F3.11U1:
/002a/1F -F3.12V1:
/002a/1F -F3.13W1:
/030a/2D
/050b/2B
/001c/ZE -Q4:1L1
/001c/ZE -Q4:3L2
/001c/ZE -Q4:5L3
/021a/8E -X6.99:4
/002a/1D -X6.10:1
Cust. Doc. No.
Cust. Ref. No.
Customer
Example Circuit Diagrams
Prep. Joni Tuomi 29.6.2023
App. Mika Askainen 29.6.2023
Project ACS880-204LC R7i
Title MAIN CIRCUIT IGBT Supply Unit ACS880-204LC-350A-7
ABB
Circuit diagram
SAP Doc. No. 3AXD10001871893
EPLAN Doc. No.
ABB Ref. No.
Resp. Dept.
EFS2
Item Des. = 01 + 01.2
Rev. A Sheet 001b
Cont. 001c

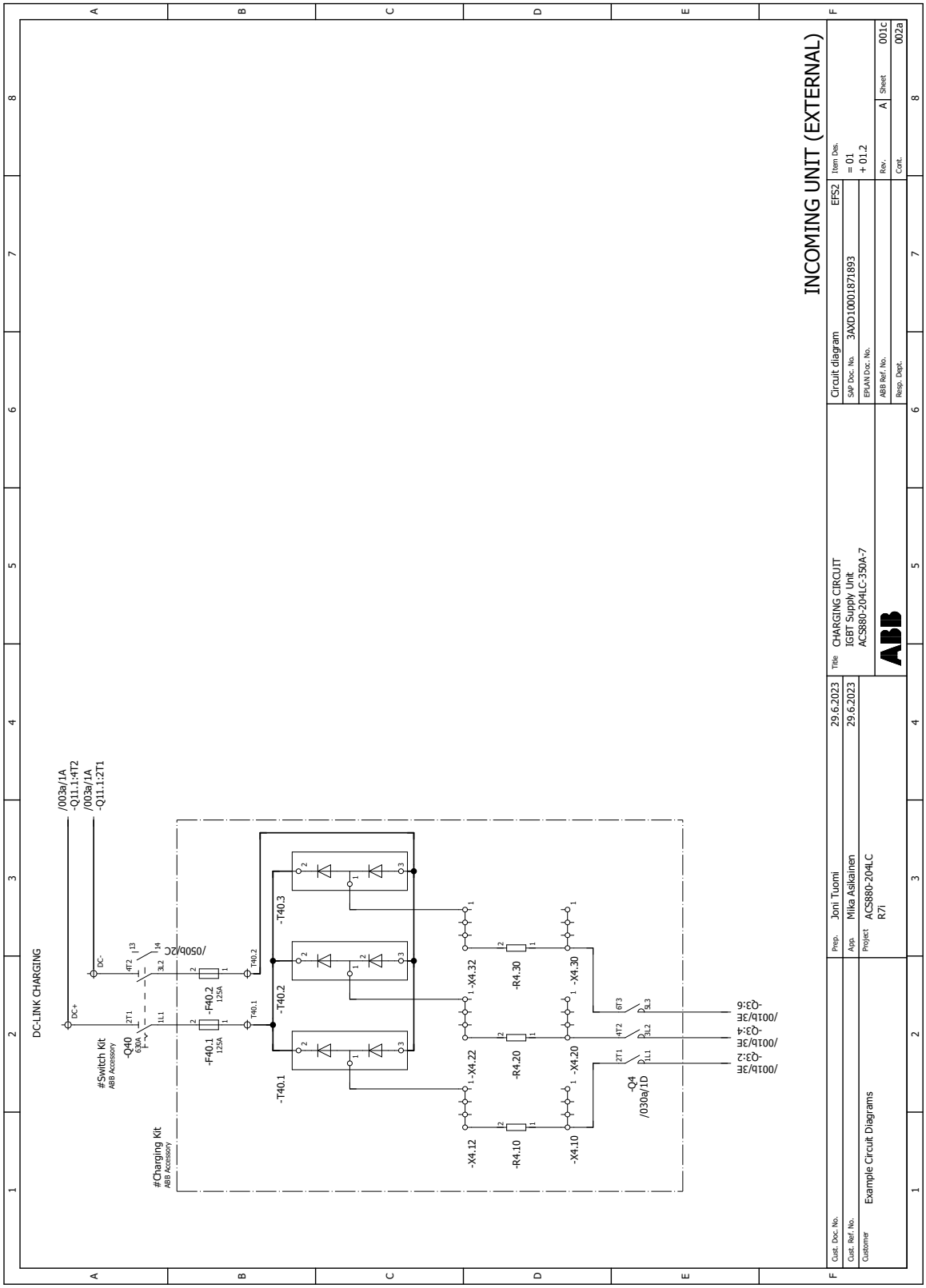
INCOMING UNIT (EXTERNAL)
DC-LINK CHARGING
/003a/1A
-Q11.1:4T2
/003a/1A
-Q11.1:2T1
DC+
DC-
#Switch Kit
ABB Accessory
-Q40
-F40.1
125A
-F40.2
125A
/050b/2C
-T40.1
-T40.2
-T40.3
#Charging Kit
ABB Accessory
-X4.12
-X4.22
-X4.32
-R4.10
-R4.20
-R4.30
-X4.10
-X4.20
-X4.30
-Q4
/030a/1D
/001b/3E
-Q3:2
/001b/3E
-Q3:4
/001b/3E
-Q3:6
Cust. Doc. No.
Cust. Ref. No.
Customer
Example Circuit Diagrams
Prep. Joni Tuomi 29.6.2023
Appr. Mika Asikainen 29.6.2023
Project ACS880-204LC R7i
Title CHARGING CIRCUIT
IGBT Supply Unit
ACS880-204LC-350A-7
Circuit diagram
SAP Doc. No. 3AXD10001871893
EPLAN Doc. No.
ABB Ref. No.
Resp. Dept.
EFS2
Item Des.
= 01
+ 01.2
Rev. A
Sheet 001c
Cont. 002a

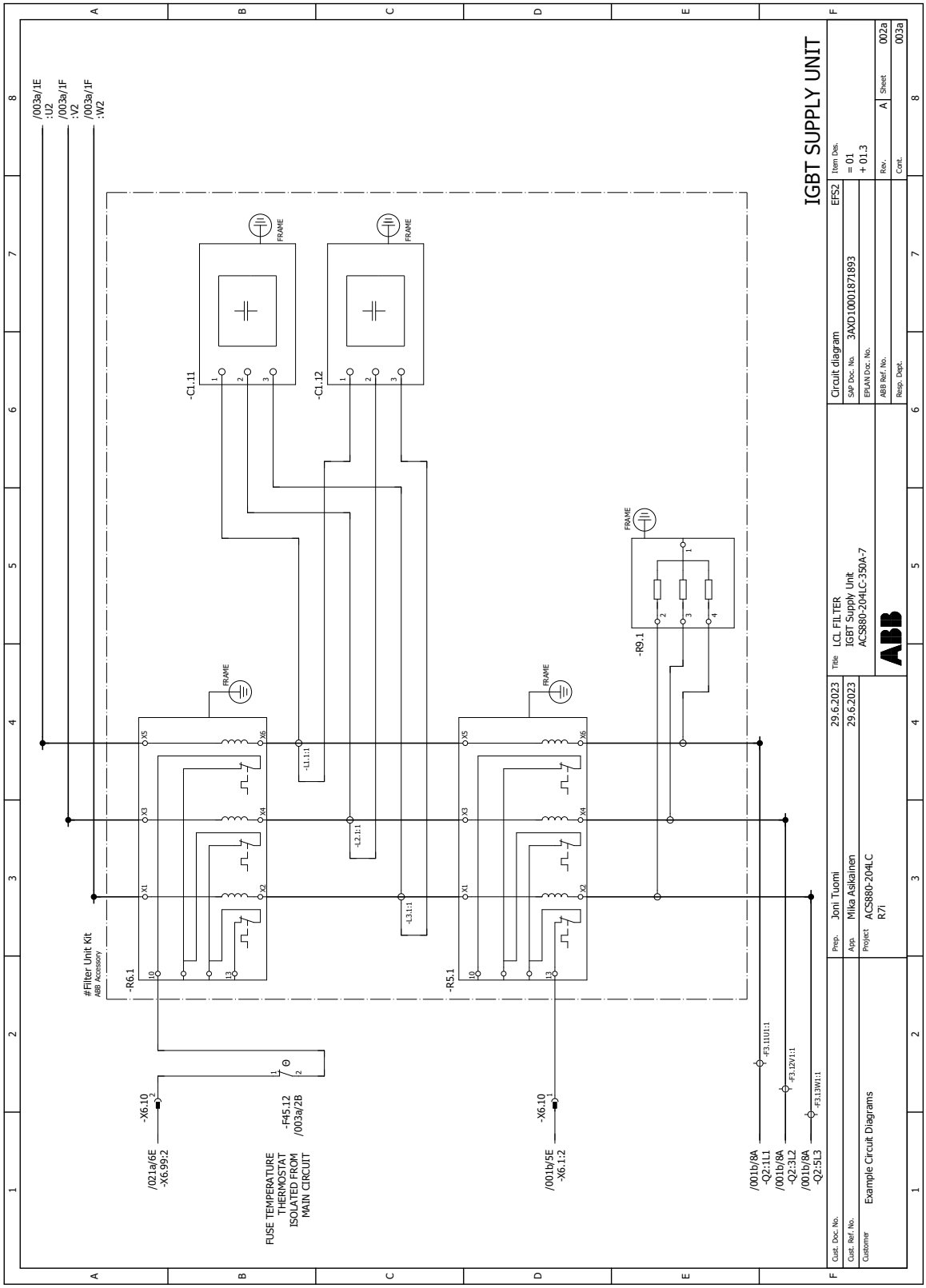
IGBT SUPPLY UNIT
/003a/1E :U2
/003a/1F :V2
/003a/1F :W2
-C1.11
-C1.12
-R9.1
-R6.1
-R5.1
#Filter Unit Kit
ABB Accessory
FRAME
-L1.1:1
-L2.1:1
-L3.1:1
-X6.10
/021a/6E -X6.99:2
-F45.12 /003a/2B
FUSE TEMPERATURE THERMOSTAT ISOLATED FROM MAIN CIRCUIT
-X6.10
/001b/5E -X6.1:2
-F3.11U1:1
-F3.12V1:1
-F3.13W1:1
/001b/8A -Q2:1L1
/001b/8A -Q2:3L2
/001b/8A -Q2:5L3
Cust. Doc. No.
Cust. Ref. No.
Customer
Example Circuit Diagrams
Prep. Joni Tuomi 29.6.2023
App. Mika Aalkainen 29.6.2023
Project ACS880-204LC R7i
Title LCL FILTER IGBT Supply Unit ACS880-204LC-350A-7
Circuit diagram
SAP Doc. No. 3AXD10001871893
EPLAN Doc. No.
ABB Ref. No.
Resp. Dept.
EFS2
Item Des. = 01 + 01.3
Rev. A
Sheet 002a
Cont. 003a

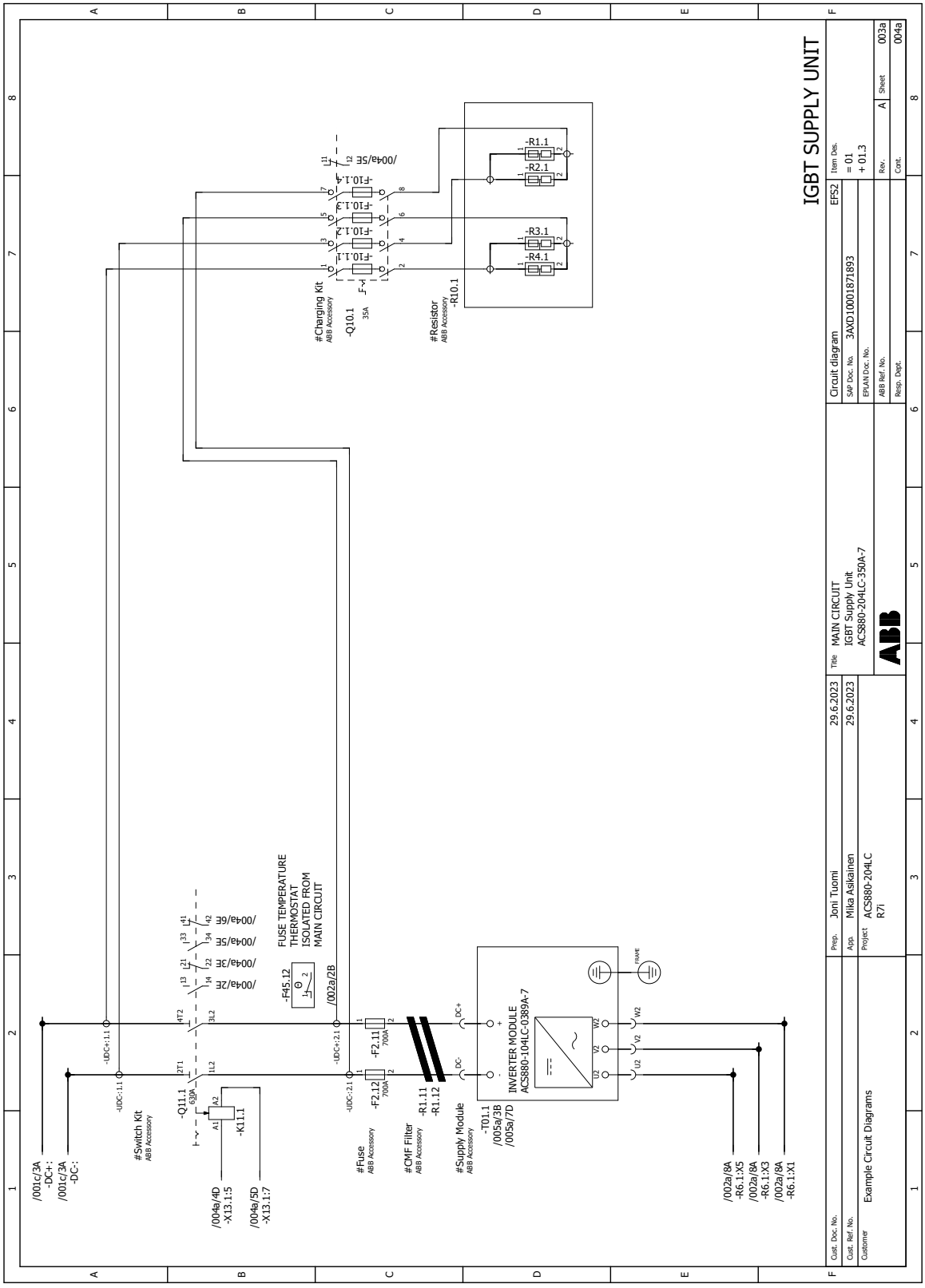
IGBT SUPPLY UNIT
Circuit diagram
EFS2
Item Des.
= 01
+ 01.3
SAP Doc. No. 3AXD10001871893
EPLAN Doc. No.
ABB Ref. No.
Resp. Dept.
Rev. A
Sheet 003a
Cont. 004a
Title MAIN CIRCUIT
IGBT Supply Unit
ACS880-204LC-350A-7
Prep. Joni Tuomi 29.6.2023
Appr. Mika Asikainen 29.6.2023
Project ACS880-204LC
R7i
Cust. Doc. No.
Cust. Ref. No.
Customer Example Circuit Diagrams
/001c/3A -DC+:
/001c/3A -DC-:
#Switch Kit ABB Accessory
-Q11.1 630A
-K11.1
/004a/4D -X13.1:5
/004a/5D -X13.1:7
-F45.12
FUSE TEMPERATURE THERMOSTAT ISOLATED FROM MAIN CIRCUIT
/002a/2B
/004a/2E
/004a/3E
/004a/5E
/004a/6E
-F2.11 700A
-F2.12 700A
#Fuse ABB Accessory
-R1.11
-R1.12
#CMF Filter ABB Accessory
#Supply Module ABB Accessory
-T01.1
/005a/3B
/005a/7D
INVERTER MODULE ACS880-104LC-0389A-7
FRAME
/002a/8A -R6.1:X5
/002a/8A -R6.1:X3
/002a/8A -R6.1:X1
#Charging Kit ABB Accessory
-Q10.1 35A
-F10.1.1
-F10.1.2
-F10.1.3
-F10.1.4
/004a/5E
#Resistor ABB Accessory
-R10.1
-R1.1
-R2.1
-R3.1
-R4.1

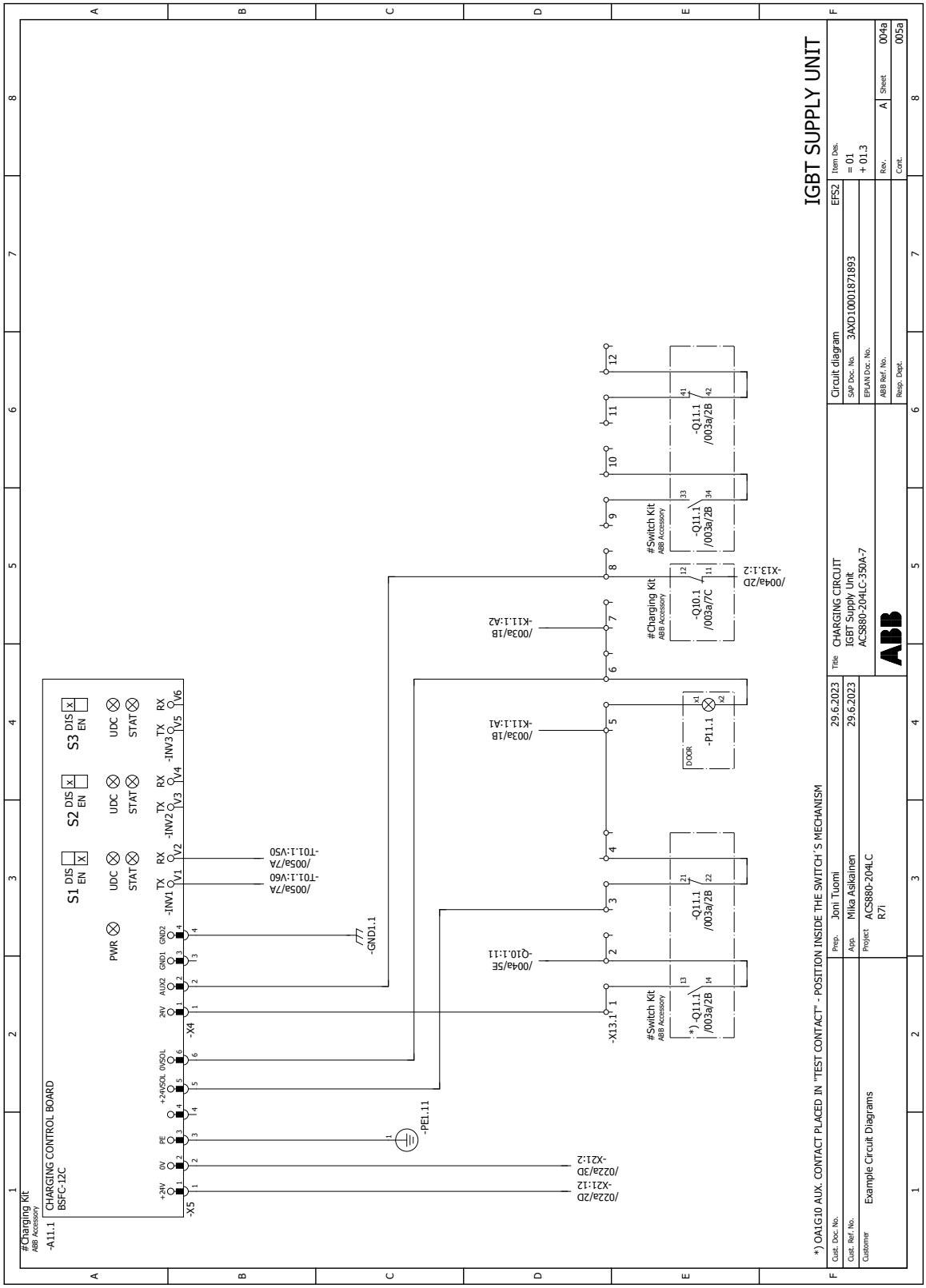
IGBT SUPPLY UNIT
#Charging Kit
ABB Accessory
-A11.1
CHARGING CONTROL BOARD
BSFC-12C
-X5
-X4
-INV1
-INV2
-INV3
S1 DIS EN
S2 DIS EN
S3 DIS EN
PWR
UDC
STAT
-GND1.1
-PE1.11
-X13.1
-Q10.1:11
-K11.1:A1
-K11.1:A2
-T01.1:V60
-T01.1:V50
-X13.1:2
-X21:12
-X21:2
-Q11.1 /003a/2B
-Q10.1 /003a/7C
-P11.1
DOOR
#Switch Kit
ABB Accessory
#Charging Kit
ABB Accessory
*) OA1G10 AUX. CONTACT PLACED IN "TEST CONTACT" - POSITION INSIDE THE SWITCH'S MECHANISM
Cust. Doc. No.
Cust. Ref. No.
Customer
Example Circuit Diagrams
Prep. Joni Tuomi 29.6.2023
App. Mika Askainen 29.6.2023
Project ACS880-204LC R7i
Title CHARGING CIRCUIT IGBT Supply Unit ACS880-204LC-350A-7
Circuit diagram
SAP Doc. No. 3AXD10001871893
EPLAN Doc. No.
ABB Ref. No.
Resp. Dept.
Item Des. EFS2
= 01
+ 01.3
Rev. A Sheet 004a
Cont. 005a

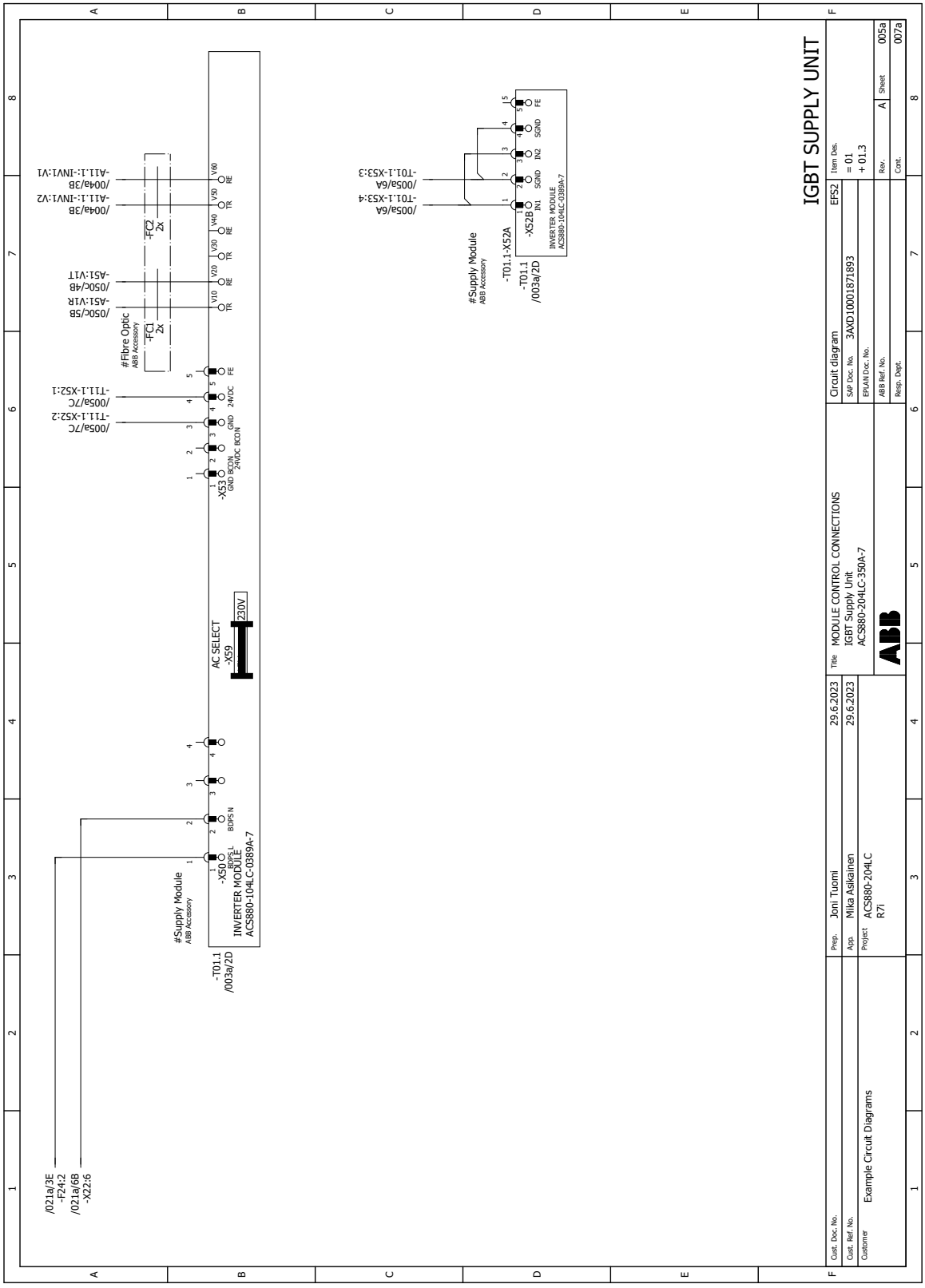
IGBT SUPPLY UNIT
MODULE CONTROL CONNECTIONS
IGBT Supply Unit
ACS880-204LC-350A-7
Circuit diagram
3AXD10001871893
EFS2
= 01
+ 01.3
ABB
Joni Tuomi
29.6.2023
Mika Asikainen
29.6.2023
ACS880-204LC
R7i
Example Circuit Diagrams
INVERTER MODULE
ACS880-104LC-0389A-7
-T01.1
/003a/2D
#Supply Module
ABB Accessory
-X50
-X53
-X59
AC SELECT
230V
#Fibre Optic
ABB Accessory
-FC1
2x
-FC2
2x
-X52A
-X52B
-T01.1-X52A
-T01.1
/003a/2D
/021a/3E
-F24:2
/021a/6B
-X22:6
/005a/7C
-T11.1-X52:2
/005a/7C
-T11.1-X52:1
/005c/5B
-A51:V1R
/005c/4B
-A51:V1T
/004a/3B
-A11.1:-INV1:V2
/004a/3B
-A11.1:-INV1:V1
/005a/6A
-T01.1-X53:4
/005a/6A
-T01.1-X53:3

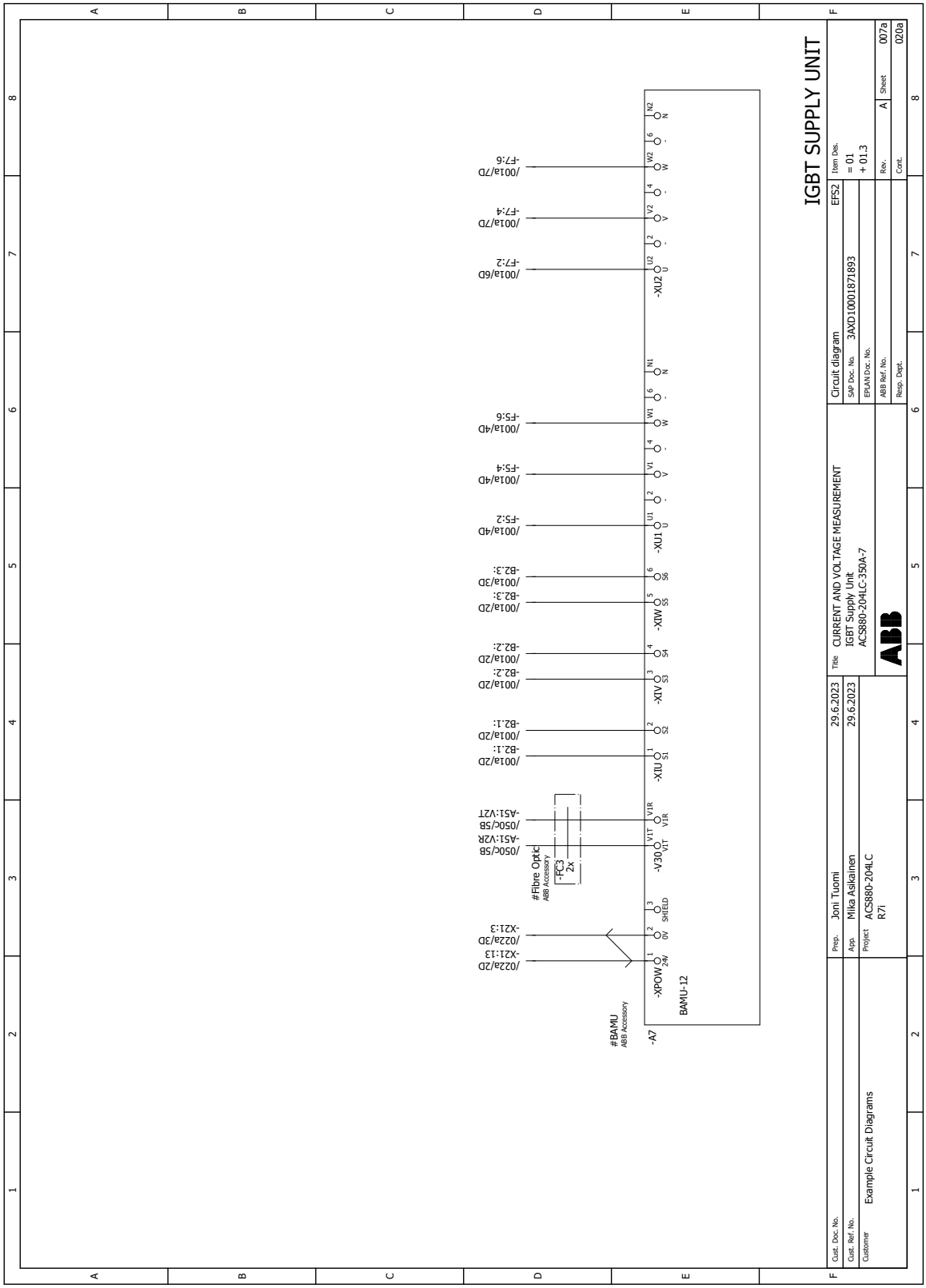
IGBT SUPPLY UNIT
Cust. Doc. No.
Cust. Ref. No.
Customer
Example Circuit Diagrams
Prep.
Joni Tuomi
29.6.2023
App.
Mika Asikainen
29.6.2023
Project
ACS880-204LC
R7i
Title
CURRENT AND VOLTAGE MEASUREMENT
IGBT Supply Unit
ACS880-204LC-350A-7
ABB
Circuit diagram
EFS2
Item Des.
= 01
+ 01.3
SAP Doc. No.
3AXD10001871893
EPLAN Doc. No.
ABB Ref. No.
Resp. Dept.
Rev.
A
Sheet
007a
Cont.
020a
-A7
BAMU-12
#BAMU
ABB Accessory
-XPOW
24V
0V
SHIELD
-XIU
-XIV
-XIW
-XU1
-XV1
-XW1
-XU2
-XV2
-XW2
-V30
V1T
V1R
#Fibre Optic
ABB Accessory
-FC3
2x
/022a/ZD
-X21:13
/022a/3D
-X21:3
/050C/5B
-A51:V2R
/050C/5B
-A51:V2T
/001a/ZD
-B2.1:
/001a/ZD
-B2.1:
/001a/ZD
-B2.2:
/001a/ZD
-B2.2:
/001a/ZD
-B2.3:
/001a/3D
-B2.3:
/001a/4D
-F5.2
/001a/4D
-F5.4
/001a/4D
-F5.6
/001a/6D
-F7.2
/001a/7D
-F7.4
/001a/7D
-F7.6

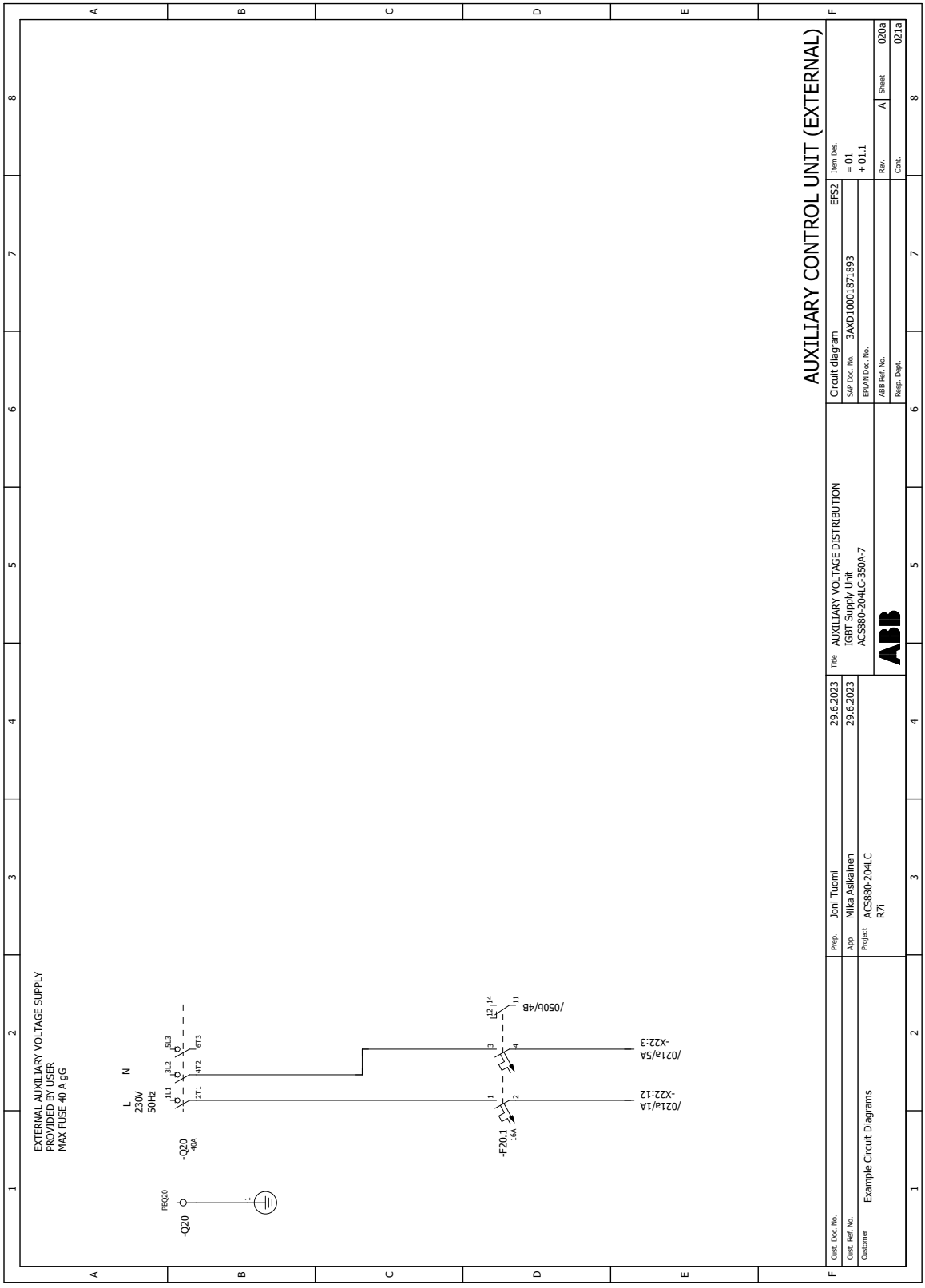
AUXILIARY CONTROL UNIT (EXTERNAL)
EXTERNAL AUXILIARY VOLTAGE SUPPLY
PROVIDED BY USER
MAX FUSE 40 A gG
L
230V
50Hz
N
-Q20
40A
-F20.1
16A
/050b/4B
/021a/5A
-XZ2:3
/021a/1A
-XZ2:12
PEQ20
AUXILIARY VOLTAGE DISTRIBUTION
IGBT Supply Unit
ACS880-204LC-350A-7
Circuit diagram
EFS2
3AXD10001871893
Joni Tuomi
29.6.2023
Mika Asikainen
29.6.2023
ACS880-204LC
R7i
Example Circuit Diagrams
Item Des.
= 01
+ 01.1
A
Sheet
020a
021a

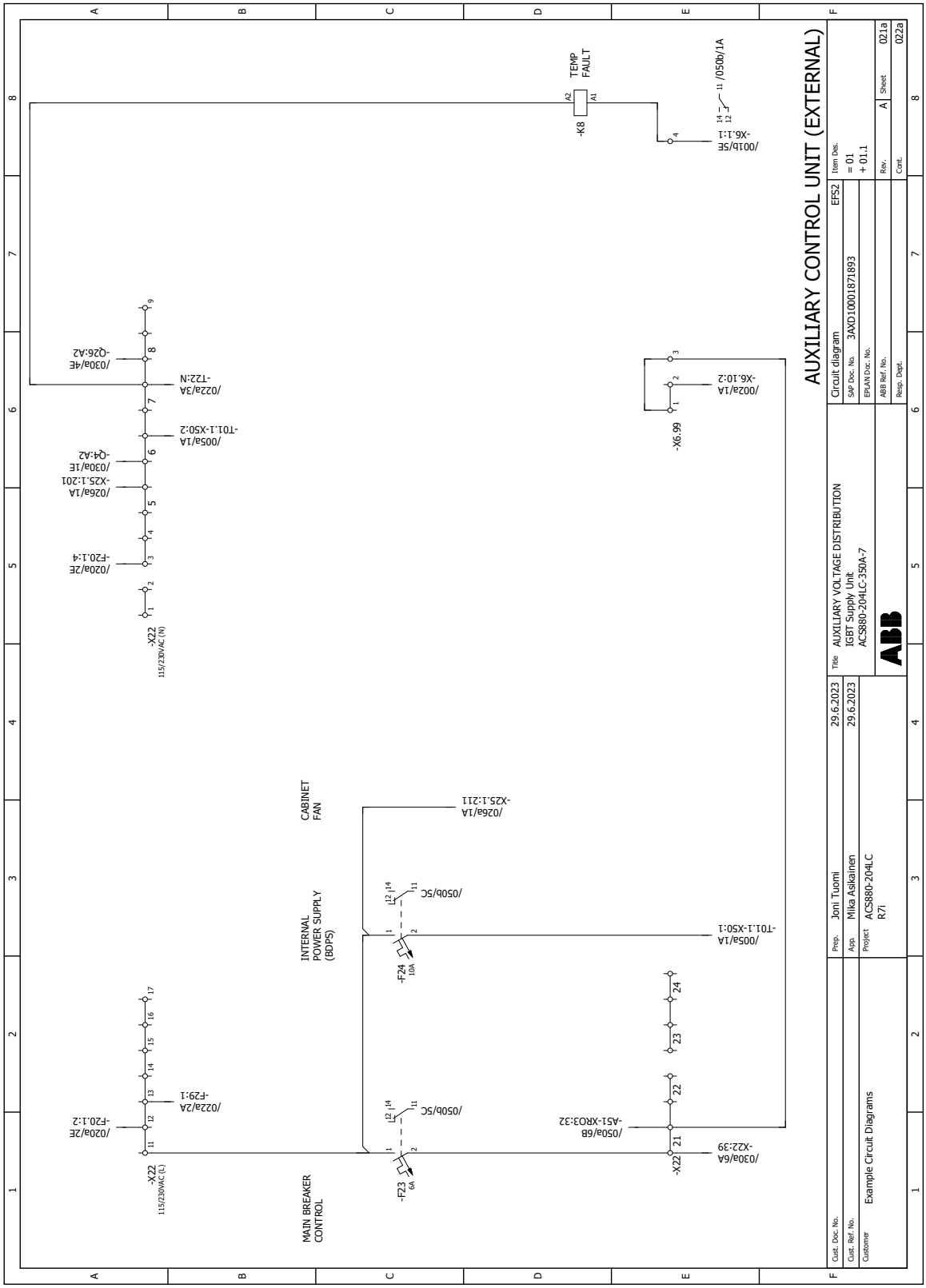
AUXILIARY CONTROL UNIT (EXTERNAL)
Circuit diagram
EFS2
Item Des.
= 01
+ 01.1
SAP Doc. No. 3AXD10001871893
EPLAN Doc. No.
ABB Ref. No.
Resp. Dept.
Rev. A
Sheet 021a
Cont. 022a
Title AUXILIARY VOLTAGE DISTRIBUTION
IGBT Supply Unit
ACS880-204LC-350A-7
ABB
Prep. Joni Tuomi 29.6.2023
App. Mika Aslkainen 29.6.2023
Project ACS880-204LC R7i
Cust. Doc. No.
Cust. Ref. No.
Customer Example Circuit Diagrams
TEMP FAULT
-K8
/050b/1A
/001b/5E
-X6.1:1
-X6.99
/002a/1A
-X6.10:2
CABINET FAN
/026a/1A
-X25.1:211
INTERNAL POWER SUPPLY (BDPS)
/050b/5C
-F24 10A
/005a/1A
-T01.1-X50:1
MAIN BREAKER CONTROL
-X22 115/230VAC (L)
-F23 6A
/050b/5C
/022a/2A
-F29:1
/020a/2E
-F20.1:2
/050a/6B
-A51-XRO3:32
/030a/6A
-X22:39
-X22 115/230VAC (N)
/020a/2E
-F20.1:4
/026a/1A
-X25.1:201
/030a/1E
-Q4:A2
/005a/1A
-T01.1-X50:2
/022a/3A
-T22:N
/030a/4E
-Q26:A2

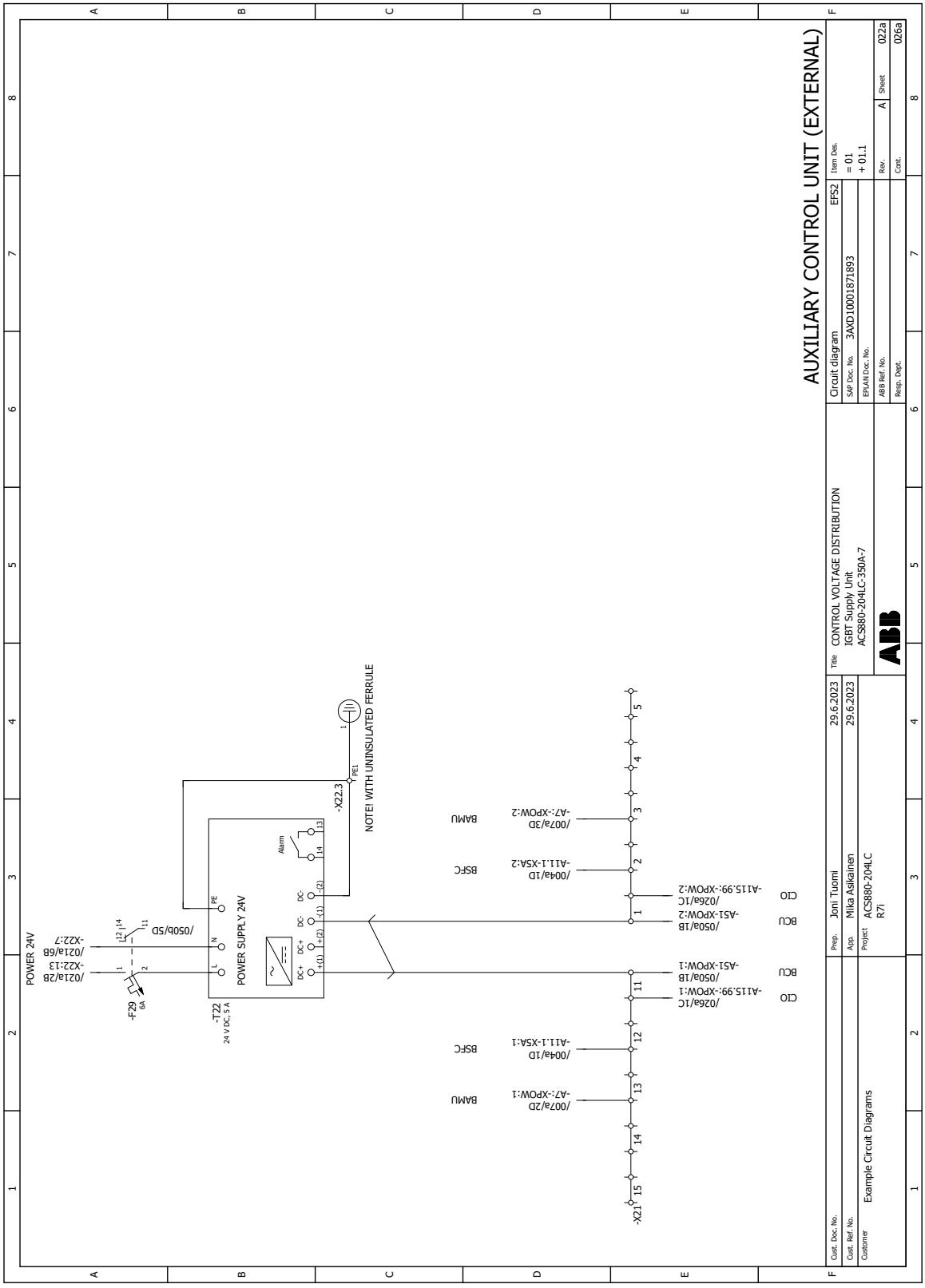
AUXILIARY CONTROL UNIT (EXTERNAL)
CONTROL VOLTAGE DISTRIBUTION
IGBT Supply Unit
ACS880-204LC-350A-7
3AXD10001871893
EFS2
= 01
+ 01.1
ABB
Joni Tuomi
Mika Asikainen
ACS880-204LC
R7i
Example Circuit Diagrams
29.6.2023
29.6.2023
POWER 24V
/021a/ZB
-XZ2:13
/021a/6B
-XZ2:7
/050b/5D
-F29
6A
-T22
24 V DC, 5 A
POWER SUPPLY 24V
Alarm
-X22:3
PE1
NOTE! WITH UNINSULATED FERRULE
-X21
BAMU
-A7:-XPOW:2
/007a/3D
BSFC
-A11.1-X5A:2
/004a/1D
CIO
-A11S.99:-XPOW:2
/026a/1C
BCU
-A51-XPOW:2
/050a/1B
BCU
-A51-XPOW:1
/050a/1B
CIO
-A11S.99:-XPOW:1
/026a/1C
BSFC
-A11.1-X5A:1
/004a/1D
BAMU
-A7:-XPOW:1
/007a/2D

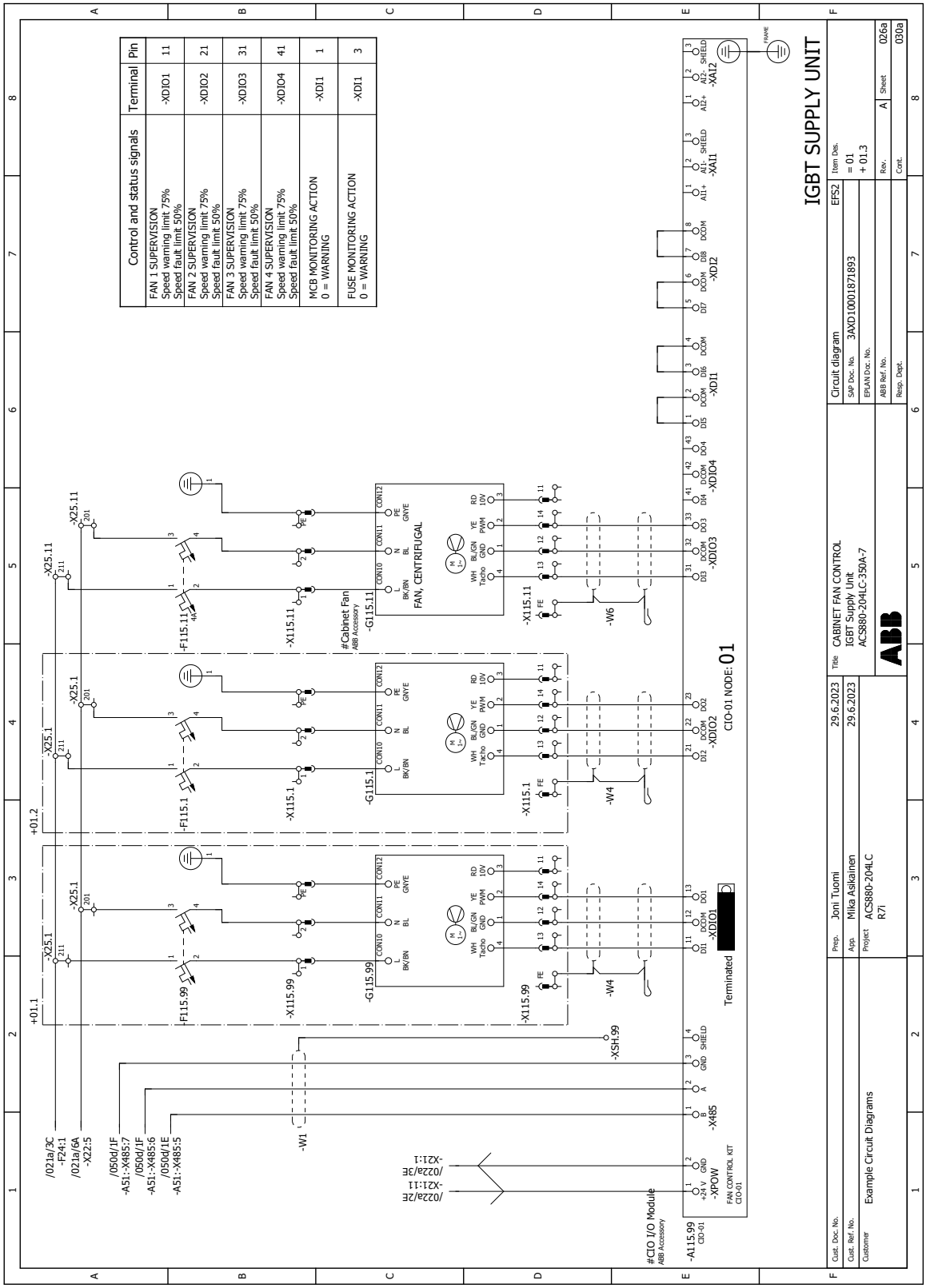
IGBT SUPPLY UNIT
Control and status signals
Terminal
Pin
FAN 1 SUPERVISION
Speed warning limit 75%
Speed fault limit 50%
-XDIO1
11
FAN 2 SUPERVISION
Speed warning limit 75%
Speed fault limit 50%
-XDIO2
21
FAN 3 SUPERVISION
Speed warning limit 75%
Speed fault limit 50%
-XDIO3
31
FAN 4 SUPERVISION
Speed warning limit 75%
Speed fault limit 50%
-XDIO4
41
MCB MONITORING ACTION
0 = WARNING
-XDI1
1
FUSE MONITORING ACTION
0 = WARNING
-XDI1
3
Circuit diagram
EFS2
Item Des.
SAP Doc. No.
3AXD10001871893
= 01
EPLAN Doc. No.
+ 01.3
ABB Ref. No.
Rev.
A
Sheet
026a
Resp. Dept.
Cont.
030a
Title
CABINET FAN CONTROL
IGBT Supply Unit
ACS880-204LC-350A-7
Prep.
Joni Tuomi
29.6.2023
App.
Mika Aslkainen
29.6.2023
Project
ACS880-204LC
R7i
Cust. Doc. No.
Cust. Ref. No.
Customer
Example Circuit Diagrams
+01.1
+01.2
-X25.1
-X25.11
-F115.99
-F115.1
-F115.11
-X115.99
-X115.1
-X115.11
-G115.99
-G115.1
-G115.11
#Cabinet Fan
ABB Accessory
FAN, CENTRIFUGAL
-W1
-W4
-W6
-XSH.99
-A115.99
CIO-01
#CIO I/O Module
ABB Accessory
-XPOW
-X485
FAN CONTROL KIT
CIO-01
Terminated
-XDIO1
-XDIO2
-XDIO3
-XDIO4
-XDI1
-XDI2
-XAI1
-XAI2
CIO-01 NODE: 01
/021a/3C
-F24:1
/021a/6A
-X2:5
/050d/1F
-A51:-X485:7
/050d/1F
-A51:-X485:6
/050d/1E
-A51:-X485:5
/022a/2E
-XZ1:11
/022a/3E
-XZ1:1
FRAME

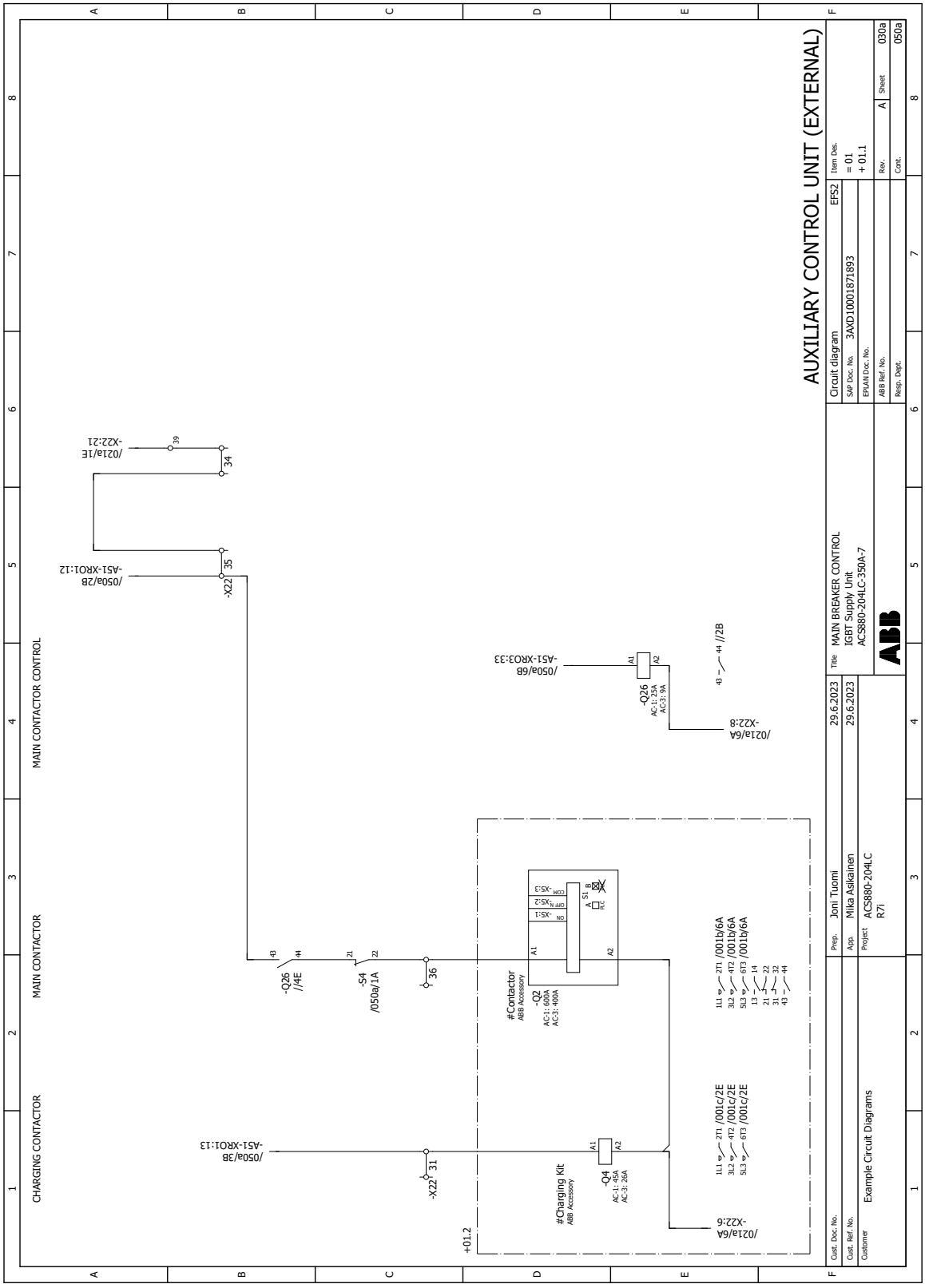
AUXILIARY CONTROL UNIT (EXTERNAL)
Circuit diagram
EFS2
SAP Doc. No. 3AXD10001871893
EPLAN Doc. No.
ABB Ref. No.
Resp. Dept.
Item Des.
= 01
+ 01.1
Rev. A
Sheet 030a
Cont. 050a
Title MAIN BREAKER CONTROL
IGBT Supply Unit
ACS880-204LC-350A-7
ABB
Prep. Joni Tuomi 29.6.2023
App. Mika Asikainen 29.6.2023
Project ACS880-204LC
R7i
Cust. Doc. No.
Cust. Ref. No.
Customer Example Circuit Diagrams
CHARGING CONTACTOR
MAIN CONTACTOR
MAIN CONTACTOR CONTROL
/050a/3B
-A51-XRO1:13
-X22 31
+01.2
#Charging Kit
ABB Accessory
-Q4
AC-1: 45A
AC-3: 26A
/021a/6A
-X22:6
1L1 2T1 /001c/2E
3L2 4T2 /001c/2E
5L3 6T3 /001c/2E
#Contactor
ABB Accessory
-Q2
AC-1: 600A
AC-3: 400A
1L1 2T1 /001b/6A
3L2 4T2 /001b/6A
5L3 6T3 /001b/6A
-Q26
/4E
-S4
/050a/1A
36
-X22 35
/050a/2B
-A51-XRO1:12
/021a/1E
-X22:21
34
39
/050a/6B
-A51-XRO3:33
-Q26
AC-1: 25A
AC-3: 9A
/021a/6A
-X22:8
43 44 //2B

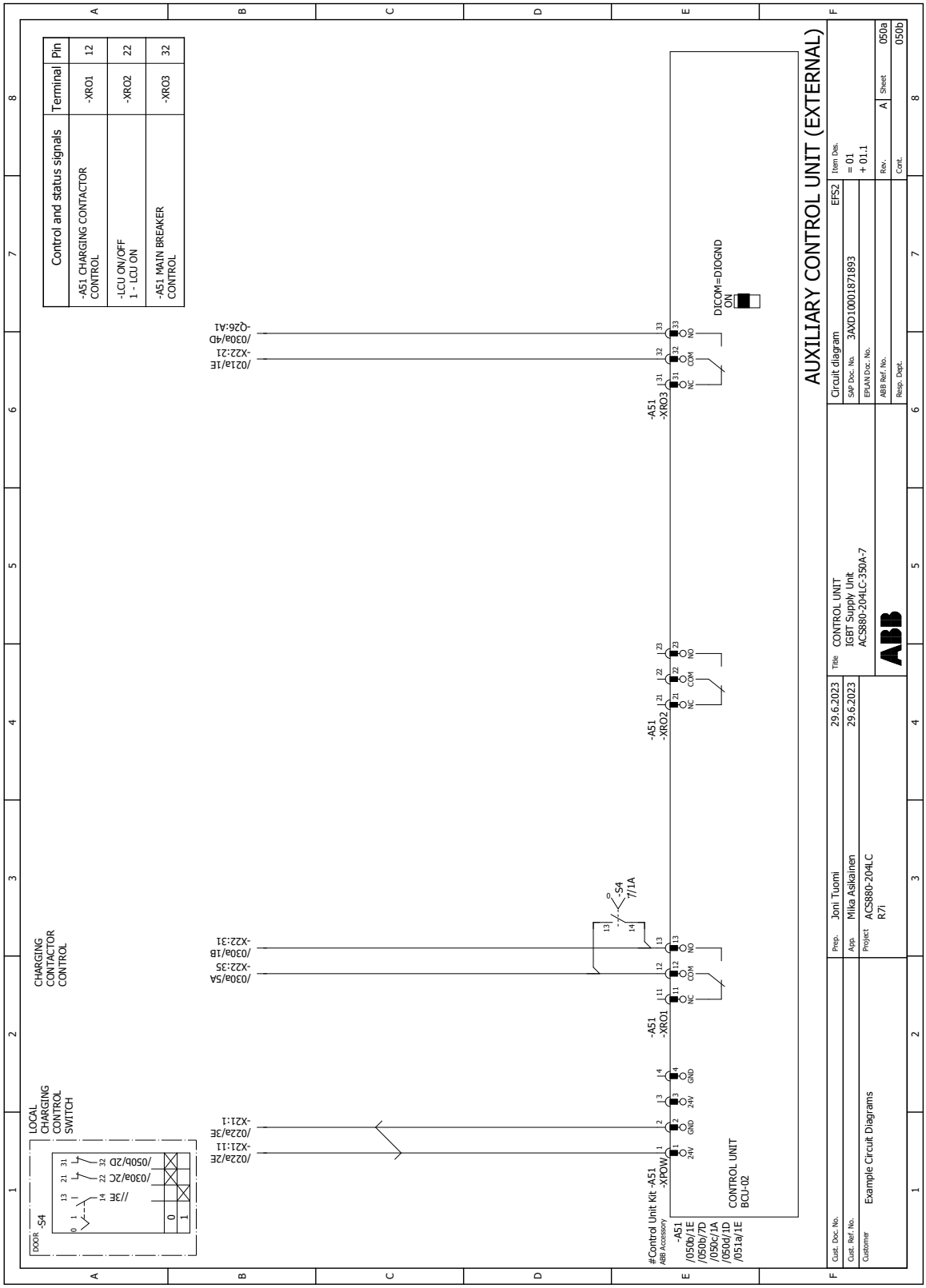
AUXILIARY CONTROL UNIT (EXTERNAL)
Control and status signals
Terminal
Pin
-A51 CHARGING CONTACTOR CONTROL
-XRO1
12
-LCU ON/OFF 1 - LCU ON
-XRO2
22
-A51 MAIN BREAKER CONTROL
-XRO3
32
LOCAL CHARGING CONTROL SWITCH
DOOR -S4
CHARGING CONTACTOR CONTROL
DICOM=DIOGND
ON
-A51 -XRO1
-A51 -XRO2
-A51 -XRO3
-S4 7/1A
#Control Unit Kit -A51
ABB Accessory
-A51 -XPOW
CONTROL UNIT BCU-02
Circuit diagram
EFS2
SAP Doc. No.
3AXD10001871893
EPLAN Doc. No.
ABB Ref. No.
Resp. Dept.
Item Des.
= 01
+ 01.1
Rev.
A
Sheet
050a
Cont.
050b
Title
CONTROL UNIT
IGBT Supply Unit
ACS880-204LC-350A-7
Prep.
Joni Tuomi
29.6.2023
App.
Mika Aaikainen
29.6.2023
Project
ACS880-204LC
R7i
Cust. Doc. No.
Cust. Ref. No.
Customer
Example Circuit Diagrams

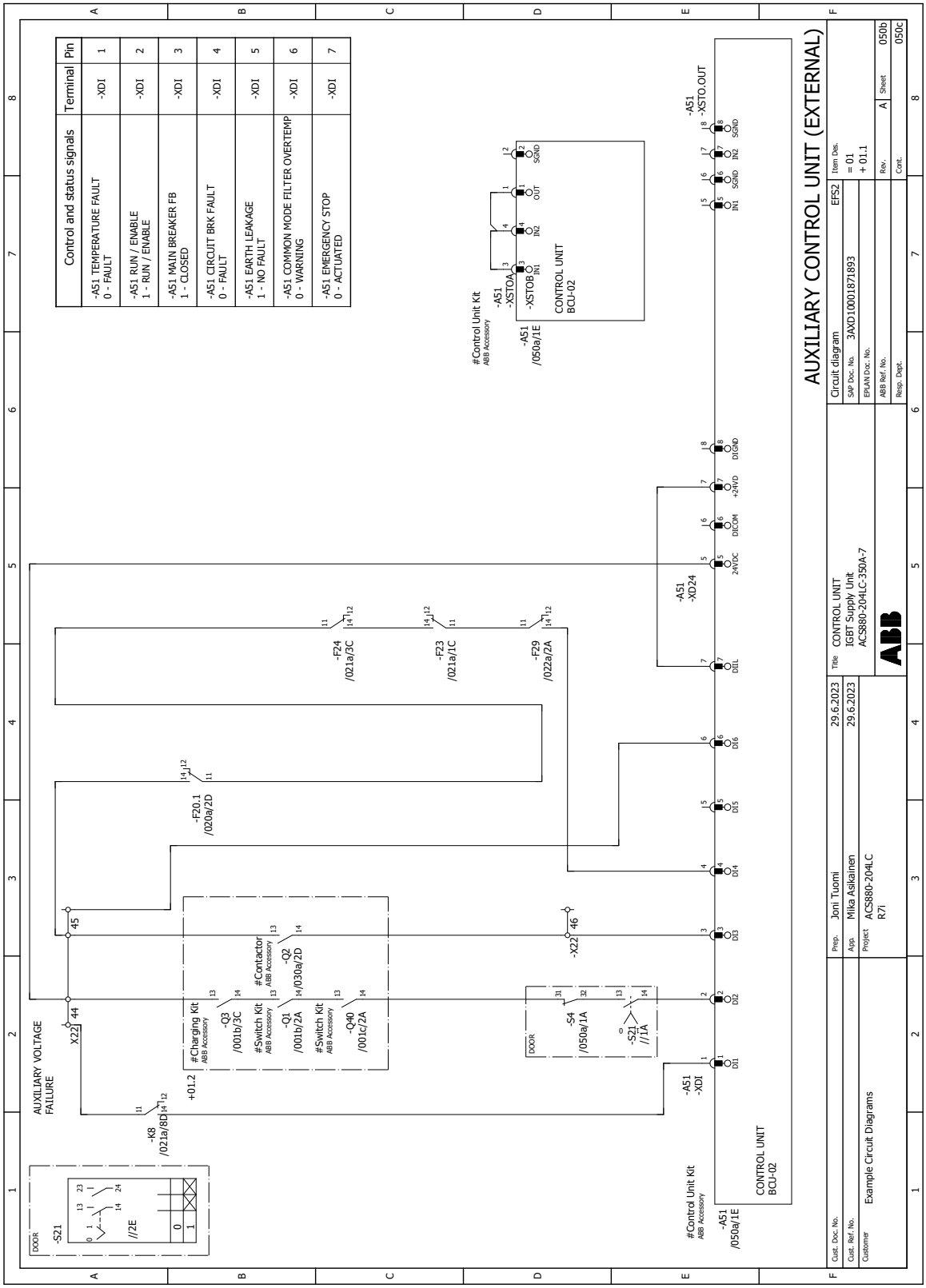
AUXILIARY CONTROL UNIT (EXTERNAL)
Control and status signals
-A51 TEMPERATURE FAULT 0 - FAULT
-A51 RUN / ENABLE 1 - RUN / ENABLE
-A51 MAIN BREAKER FB 1 - CLOSED
-A51 CIRCUIT BRK FAULT 0 - FAULT
-A51 EARTH LEAKAGE 1 - NO FAULT
-A51 COMMON MODE FILTER OVERTEMP 0 - WARNING
-A51 EMERGENCY STOP 0 - ACTUATED
Terminal
-XDI
Pin
1
2
3
4
5
6
7
AUXILIARY VOLTAGE FAILURE
DOOR
-S21
//2E
-K8 /021a/8D
+01.2
X22
44
45
-Q3 /001b/3C
-Q1 /001b/2A
-Q0 /001c/2A
-Q2 /030a/2D
#Charging Kit
#Switch Kit
#Contactor
ABB Accessory
-F20.1 /020a/2D
-F24 /021a/3C
-F23 /021a/1C
-F29 /022a/2A
-S4 /050a/1A
-S21 //1A
-X22
46
-A51 -XDI
-A51 -XD24
-A51 -XSTO.OUT
-A51 -XSTOA
-A51 -XSTOB
-A51 /050a/1E
CONTROL UNIT BCU-02
#Control Unit Kit
ABB Accessory
DI1
DI2
DI3
DI4
DI5
DI6
DIL
24VDC
DICOM
+24VD
DIGND
IN1
IN2
SGND
OUT
Cust. Doc. No.
Cust. Ref. No.
Customer
Example Circuit Diagrams
Prep.
Joni Tuomi
29.6.2023
Appr.
Mika Asikainen
29.6.2023
Project
ACS880-204LC R7i
Title
CONTROL UNIT IGBT Supply Unit ACS880-204LC-350A-7
Circuit diagram
EFS2
SAP Doc. No.
3AXD10001871893
EPLAN Doc. No.
ABB Ref. No.
Resp. Dept.
Item Des.
= 01
+ 01.1
Rev.
A
Sheet
050b
Cont.
050c

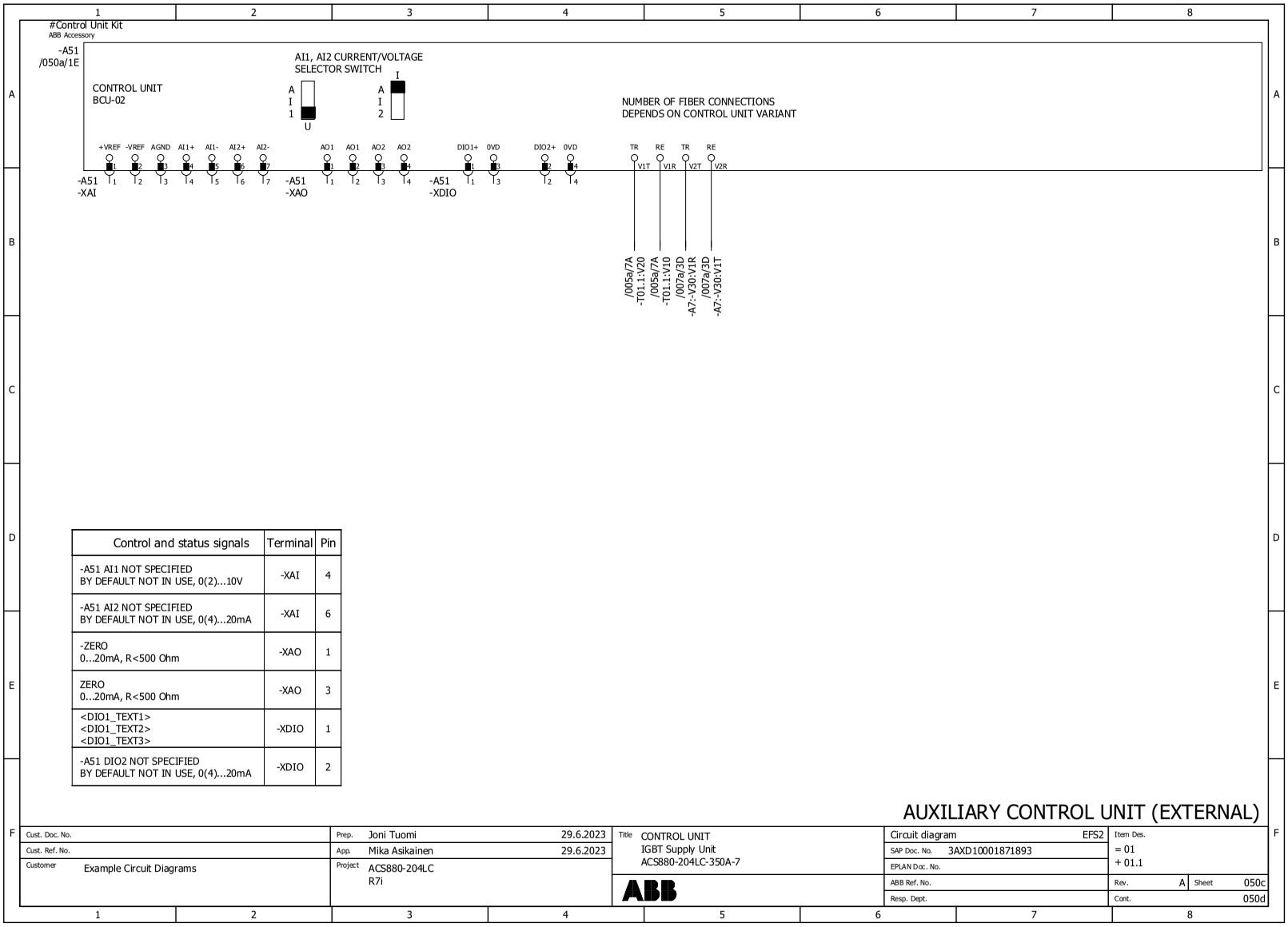

Control and status signals	Terminal	Pin
-A51 AI1 NOT SPECIFIED BY DEFAULT NOT IN USE, 0(2)...10V	-XAI	4
-A51 AI2 NOT SPECIFIED BY DEFAULT NOT IN USE, 0(4)...20mA	-XAI	6
-ZERO 0...20mA, R<500 Ohm	-XAO	1
ZERO 0...20mA, R<500 Ohm	-XAO	3
<DIO1_TEXT1> <DIO1_TEXT2> <DIO1_TEXT3>	-XDIO	1
-A51 DIO2 NOT SPECIFIED BY DEFAULT NOT IN USE, 0(4)...20mA	-XDIO	2

AUXILIARY CONTROL UNIT (EXTERNAL)

Cust. Doc. No.	Prep. Joni Tuomi 29.6.2023	Title CONTROL UNIT IGBT Supply Unit ACS880-204LC-350A-7	Circuit diagram EFS2	Item Des.	
Cust. Ref. No.	App. Mika Asikainen 29.6.2023		SAP Doc. No. 3AXD10001871893	= 01 + 01.1	
Customer Example Circuit Diagrams	Project ACS880-204LC R7i		EPLAN Doc. No.		
		ABB	ABB Ref. No.	Rev. A	Sheet 050c
			Resp. Dept.	Cont.	050d

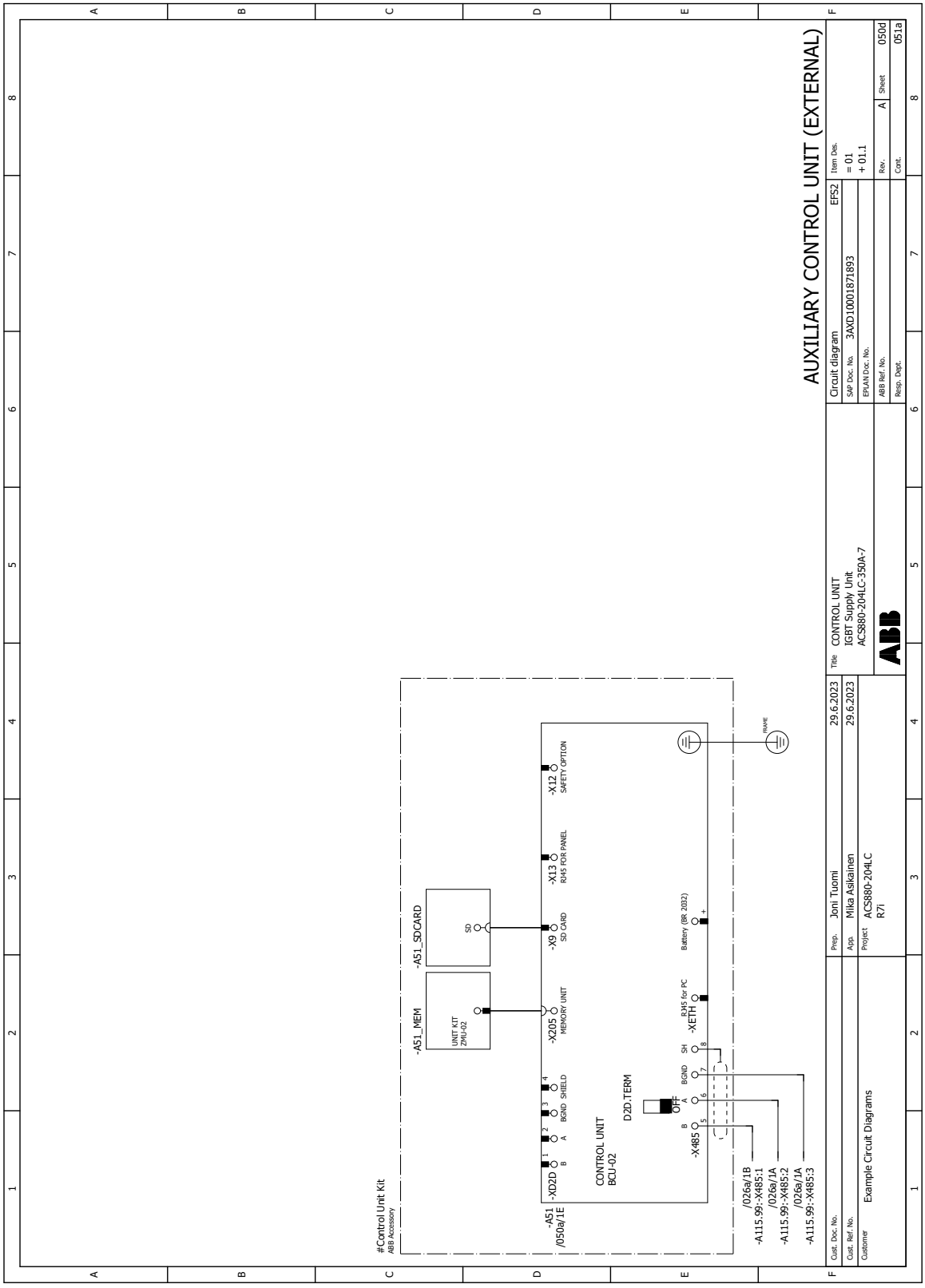
AUXILIARY CONTROL UNIT (EXTERNAL)
#Control Unit Kit
ABB Accessory
-A51_MEM
UNIT KIT
ZMU-02
-A51_SDCARD
SD
-A51
/050a/1E
-XD2D
B
A
BGND
SHIELD
-X205
MEMORY UNIT
-X9
SD CARD
-X13
RJ45 FOR PANEL
-X12
SAFETY OPTION
CONTROL UNIT
BCU-02
D2D.TERM
OFF
-X485
BGND
SH
-XETH
RJ45 for PC
Battery (BR 2032)
PAWE
/026a/1B
-A115.99:-X485:1
/026a/1A
-A115.99:-X485:2
/026a/1A
-A115.99:-X485:3
Cust. Doc. No.
Cust. Ref. No.
Customer
Example Circuit Diagrams
Prep.
Joni Tuomi
29.6.2023
Appr.
Mika Asikainen
29.6.2023
Project
ACS880-204LC
R7i
Title
CONTROL UNIT
IGBT Supply Unit
ACS880-204LC-350A-7
Circuit diagram
EFS2
SAP Doc. No.
3AXD10001871893
EPLAN Doc. No.
ABB Ref. No.
Resp. Dept.
Item Des.
= 01
+ 01.1
Rev.
A
Sheet
050d
Cont.
051a

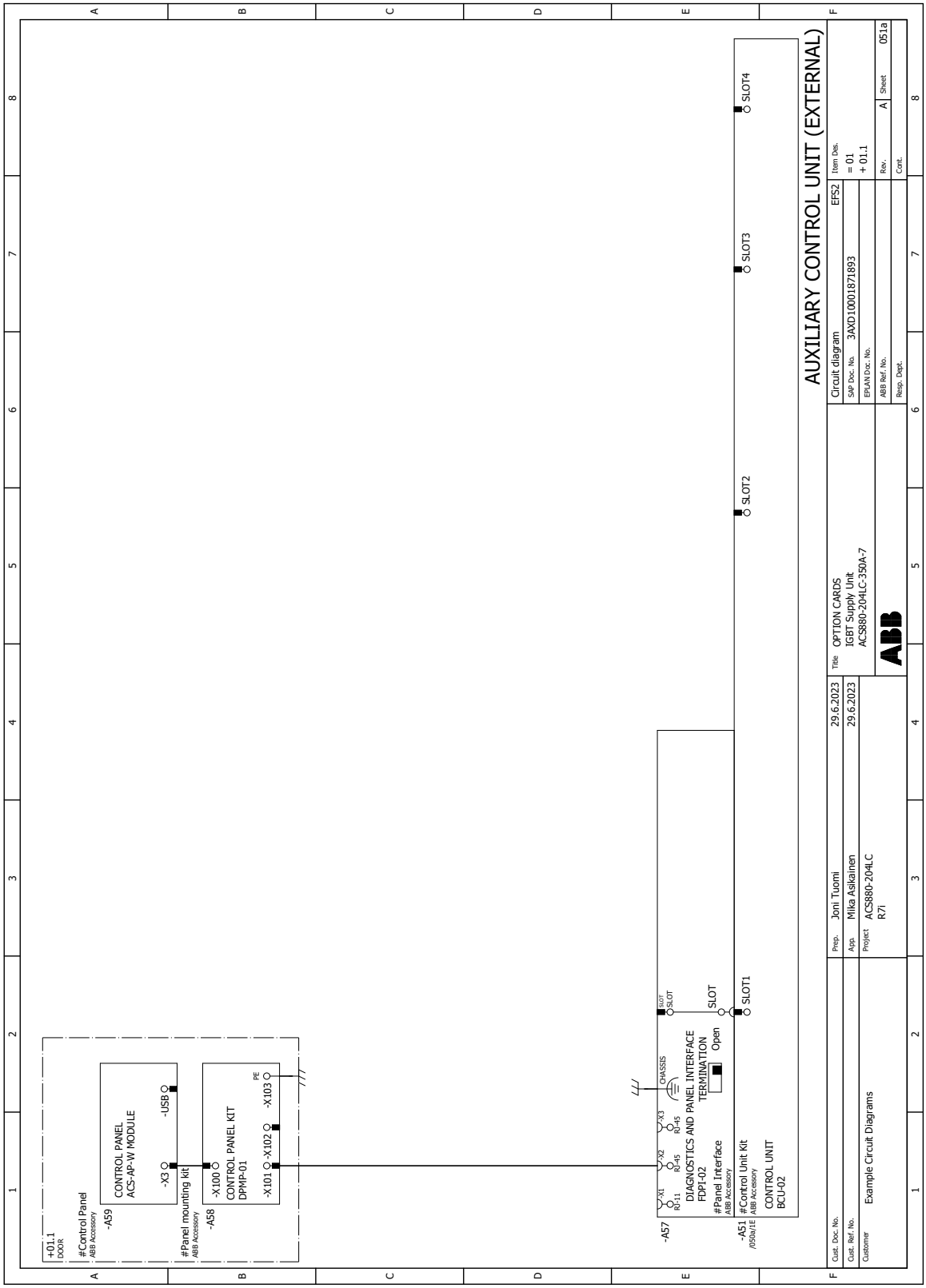
AUXILIARY CONTROL UNIT (EXTERNAL)
+01.1
DOOR
#Control Panel
ABB Accessory
-A59
CONTROL PANEL
ACS-AP-W MODULE
-X3
-USB
#Panel mounting kit
ABB Accessory
-A58
-X100
CONTROL PANEL KIT
DPMP-01
-X101
-X102
-X103
PE
-A57
-X1
RJ-11
-X2
RJ-45
-X3
RJ-45
CHASSIS
DIAGNOSTICS AND PANEL INTERFACE
FDPI-02
#Panel Interface
ABB Accessory
SLOT
SLOT
TERMINATION
Open
-A51
#Control Unit Kit
/050a/1E
ABB Accessory
CONTROL UNIT
BCU-02
SLOT1
SLOT2
SLOT3
SLOT4
Cust. Doc. No.
Cust. Ref. No.
Customer
Example Circuit Diagrams
Prep.
Joni Tuomi
29.6.2023
App.
Mika Aaikainen
29.6.2023
Project
ACS880-204LC
R7i
Title
OPTION CARDS
IGBT Supply Unit
ACS880-204LC-350A-7
Circuit diagram
EFS2
SAP Doc. No.
3AXD10001871893
EPLAN Doc. No.
ABB Ref. No.
Resp. Dept.
Item Des.
= 01
+ 01.1
Rev.
A
Sheet
051a
Cont.

Frame 4×R7i

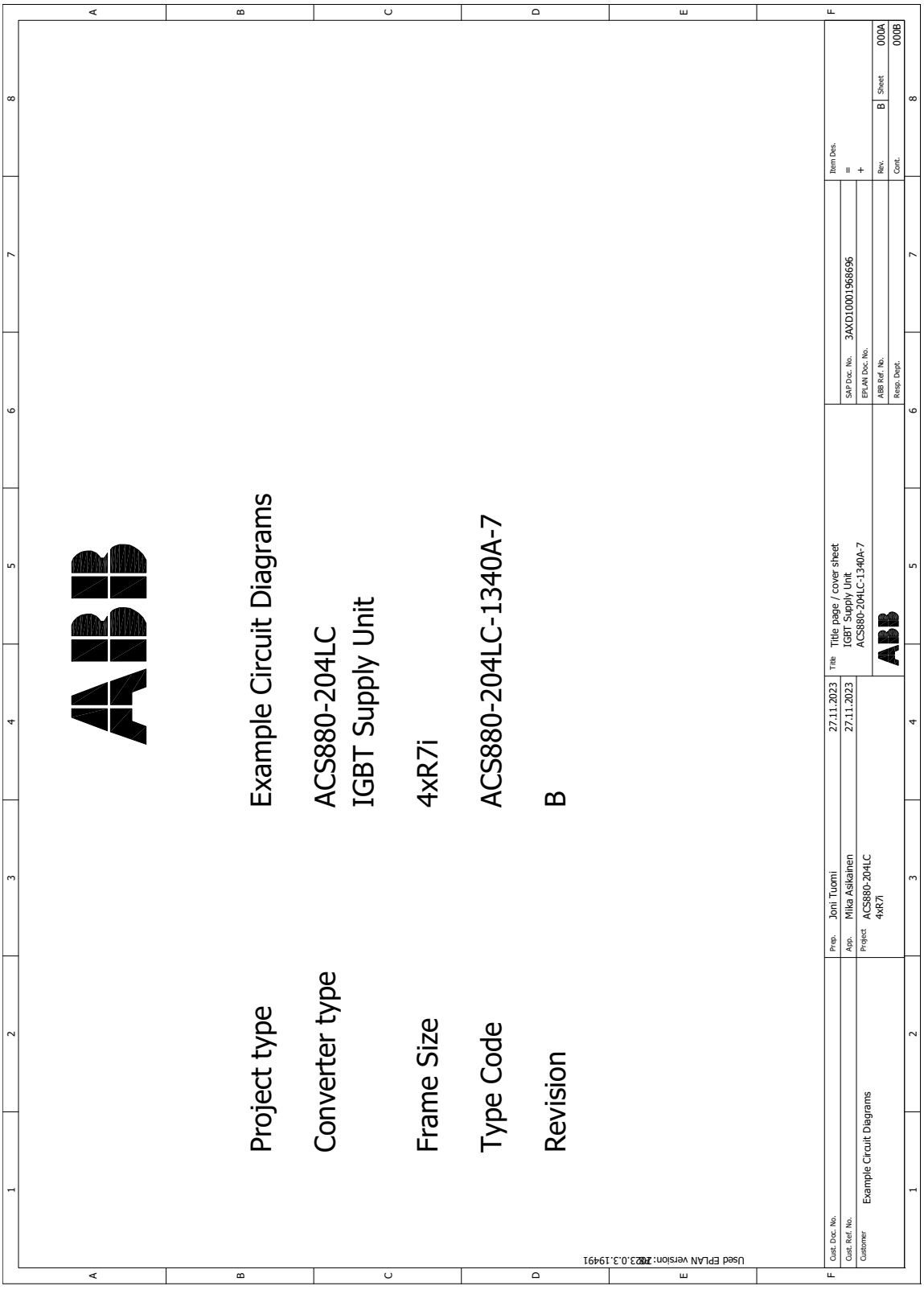
Example Circuit Diagrams
Project type
ACS880-204LC
IGBT Supply Unit
Converter type
4xR7i
Frame Size
ACS880-204LC-1340A-7
Type Code
B
Revision
Used EPLAN version: 2023.0.3.19491
Cust. Doc. No.
Cust. Ref. No.
Customer
Example Circuit Diagrams
Prep. Joni Tuomi 27.11.2023
Appr. Mika Asikainen 27.11.2023
Project ACS880-204LC 4xR7i
Title Title page / cover sheet
IGBT Supply Unit
ACS880-204LC-1340A-7
SAP Doc. No. 3AXD10001968696
EPLAN Doc. No.
ABB Ref. No.
Resp. Dept.
Item Des.
=
+
Rev. B
Sheet 000A
Cont. 000B

Higher-level function	Page	Page description	Revision
	000A	Title page / cover sheet	B
	000C	Structured identifier overview	B
	000D	Summarized parts list	B
	000E	Summarized parts list	B
	200A	Overview diagram	B
	300A	Symbol Overview	B
01	001a	MAIN CIRCUIT	B
	001b	CHARGING CIRCUIT	B
	002a	LCL FILTER	B
	002b	LCL FILTER	B
	003a	MAIN CIRCUIT	B
	005a	MODULE CONTROL CONNECTIONS	B
	005b	MODULE CONTROL CONNECTIONS	B
	007a	CURRENT AND VOLTAGE MEASUREMENT	B
	020a	AUXILIARY VOLTAGE DISTRIBUTION	B
	022a	CONTROL VOLTAGE DISTRIBUTION	B
	026a	CABINET FAN CONTROL	B
	026b	CABINET FAN CONTROL	B
	030a	MAIN BREAKER CONTROL	B
	050a	CONTROL UNIT	B
	050b	CONTROL UNIT	B
	050c	CONTROL UNIT	B
	050d	CONTROL UNIT	B
	051a	OPTION CARDS	B

Cust. Doc. No.	Prep. Joni Tuomi 27.11.2023	Title Table of contents IGBT Supply Unit ACS880-204LC-1340A-7		Item Des.
Cust. Ref. No.	App. Mika Asikainen 27.11.2023		SAP Doc. No. 3AXD10001968696	=
Customer Example Circuit Diagrams	Project ACS880-204LC 4xR7i		EPLAN Doc. No.	+
		ABB	ABB Ref. No.	Rev. B Sheet 000B
			Resp. Dept.	Cont. 000C

Function designations

Designation	Structure description
=01	IGBT Supply Unit

Location designations

Designation	Structure description
+01.1	Auxiliary Control Cubicle (External)
+01.2	Incoming Cubicle (External)
+01.3	1st LCL Cubicle
+01.4	2nd LCL Cubicle
+01.5	IGBT Supply Cubicle

Electrical option designations

Designation	Material Code	Quantity
#BAMU	3AXD50000045879	1
#CMF Filter	3AXD50000566785	8
#Charging Kit	3AXD50000250790	1
#Control Panel	3AXD50000025965	1
#Control Unit Kit	3AXD50000015806	1
#Fibre Optic	58948233, 58948250	5
#Fuse	3AXD50000000246, 68735980	20
#LCL Filter Kit	3AXD50000234448	1
#Main Breaker	3AXD50000048330, 3AXD50000048354, 3AXD50000286324	1
#Panel Interface	3AUA0000108650	1
#Panel mounting kit	3AUA0000108878	1
#Supply Module	ACS880-104LC-0389A-7	4

Cust. Doc. No.	Prep. Joni Tuomi 27.11.2023	Title Structured identifier overview IGBT Supply Unit ACS880-204LC-1340A-7		Item Des.	
Cust. Ref. No.	App. Mika Asikainen 27.11.2023		SAP Doc. No. 3AXD10001968696	=	
Customer Example Circuit Diagrams	Project ACS880-204LC 4xR7i		EPLAN Doc. No.	+	
		ABB	ABB Ref. No.	Rev. B	Sheet 000C
			Resp. Dept.	Cont.	000D

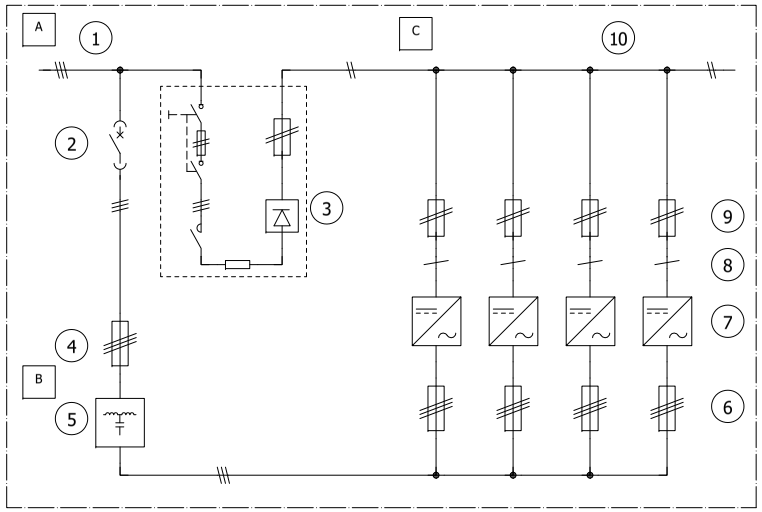

Content

Identifier	Location	Identifier	Component	Available through
A	Incoming cubicle	1	AC supply	-
A	Incoming cubicle	2	Main circuit breaker	ABB or third party
A	Incoming cubicle	3	AC-DC charging kit (line-up charging)	ABB or third party
B	LCL filter cubicles	4	AC fuses	ABB or third party
B	LCL filter cubicles	5	LCL filter	ABB
C	IGBT supply module cubicle	6	AC fuses	ABB or third party
C	IGBT supply module cubicle	7	IGBT supply modules	ABB
C	IGBT supply module cubicle	8	Common mode filters	ABB
C	IGBT supply module cubicle	9	DC fuses	ABB or third party
C	IGBT supply module cubicle	10	DC link	-

Cust. Doc. No.	Prep. Joni Tuomi 27.11.2023	Title Overview diagram IGBT Supply Unit ACS880-204LC-1340A-7		Item Des.
Cust. Ref. No.	App. Mika Asikainen 27.11.2023		SAP Doc. No. 3AXD10001968696	=
Customer Example Circuit Diagrams	Project ACS880-204LC 4xR7i		EPLAN Doc. No.	+
		ABB	ABB Ref. No.	Rev. B Sheet 200A
			Resp. Dept.	Cont. 300A

GENERAL/RELAY COIL, WITH PROTECTIVE CIRCUIT DIODE AND R+LED

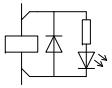

GENERAL/RELAY COIL

COIL WITH PICK-UP DELAY

COIL WITH OFF-DELAY

NO CONTACT

NC CONTACT

CHANGE OVER CONTACT

NO CONTACT, WITH CLOSING DELAY

TWO NO CONTACTS ONE INPUT, TWO OUTPUTS

TWO CONNECTED CHANGE OVER CONTACTS

POWER NO CONTACT OF A CONTACTOR

PUSH BUTTON WITH NO CONTACT

PUSH BUTTON WITH NC CONTACT

NO SWITCH, OPERATED BY TURNING, 2 POSITIONS

LIMIT SWITCH NC CONTACT MECHANICALLY OPERATED

NC SWITCH, TEMPERATURE OPERATED

EMERGENCY STOP PUSH BUTTON

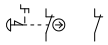

DISCONNECT SWITCH, THREE-POLE

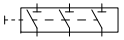

SWITCH DISCONNECTOR WITH FUSES, THREE-POLE

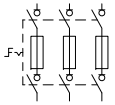

FUSE

FUSE DISCONNECTOR

CIRCUIT BREAKER

MOTOR OVERLOAD SWITCH WITH SWITCH MECHANISM

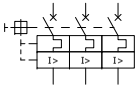

COMMON MODE FILTER FOR HIGH FREQUENCY CURRENTS

PROTECTIVE EARTH CONNECTED TO FRAME

PROTECTIVE EARTH CONNECTED TO TERMINAL / PE BUSBAR

FUNCTIONAL EARTHING CONNECTED TO TERMINAL

FUNCTIONAL BONDING TO FRAME

LIGHT

INDUCTOR

CAPACITOR

RESISTOR

POWER RESISTOR WITH FUSE

PHASE SELECTING SWITCH

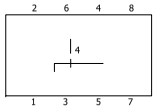

PRIMARY, VOLTAGE SELECTION

TRANSFORMER

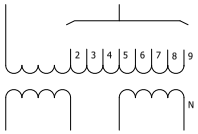

EMC FILTER

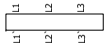

TERMINAL, FOUR POLE

PLUG AND SOCKET TERMINAL BLOCK WITH 4 CONNECTION POINTS

FEMALE AND MALE PLUG

AMPERE METER

CURRENT TRANSFORMER

VOLTAGE METER

WIRE TERMINATION, INSULATED

SHIELDED CABLE

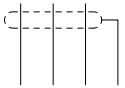

THERMAL OPERATION

DISCONNECT

DISCONNECT, CAN BE OPERATED WHILE NOMINAL CURRENT IS APPLIED

BREAKER, SHORTCIRCUIT BREAKING CAPABILITY

Cust. Doc. No.	Prep. Joni Tuomi 27.11.2023	Title Symbol Overview		Item Des.	
Cust. Ref. No.	App. Mika Asikainen 27.11.2023	IGBT Supply Unit	SAP Doc. No. 3AXD10001968696	=	
Customer Example Circuit Diagrams	Project ACS880-204LC 4xR7i	ACS880-204LC-1340A-7	EPLAN Doc. No.	+	
		ABB	ABB Ref. No.	Rev. B	Sheet 300A
			Resp. Dept.	Cont.	=01&EFS2/001a

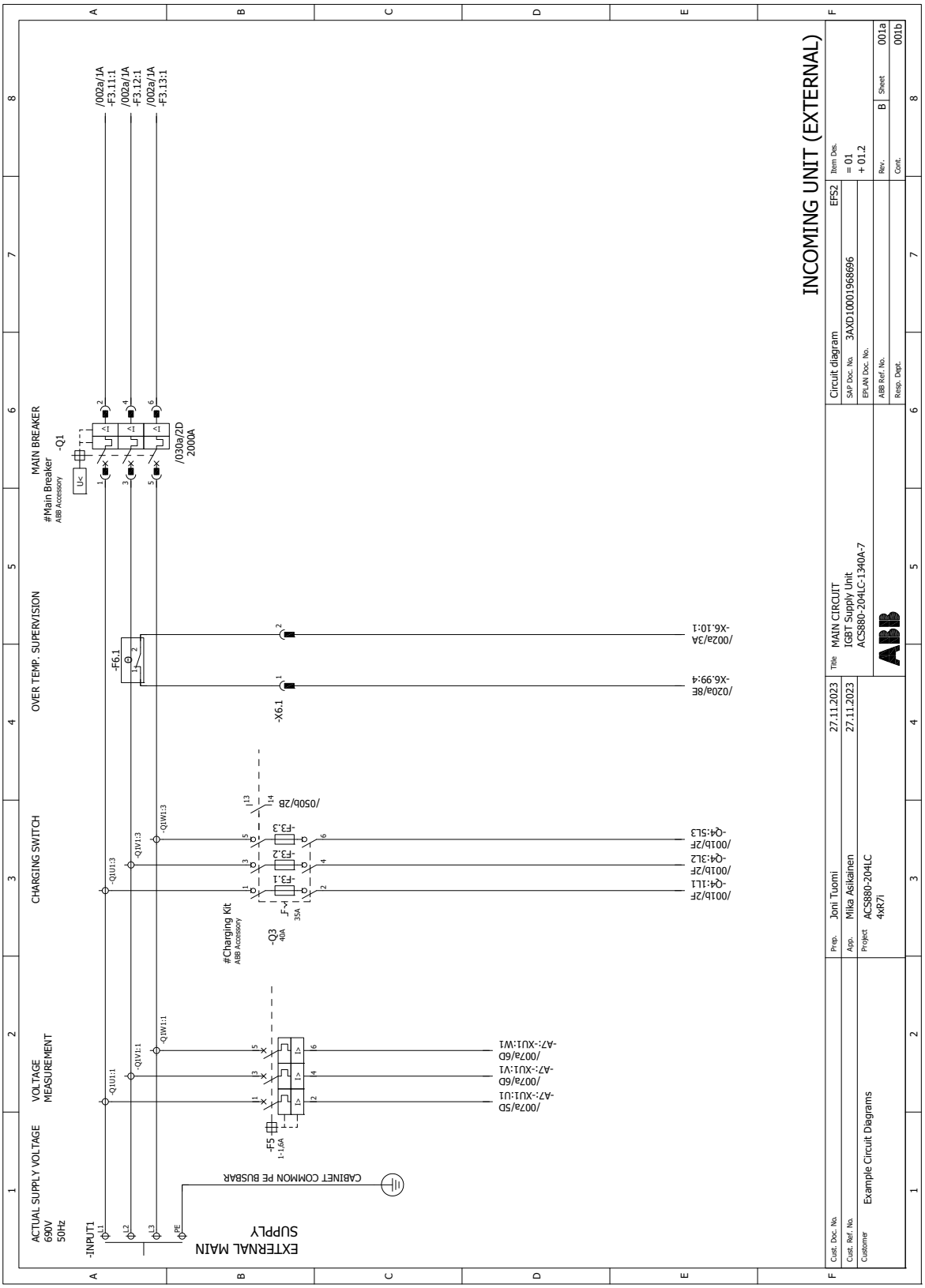
INCOMING UNIT (EXTERNAL)
MAIN CIRCUIT
IGBT Supply Unit
ACS880-204LC-1340A-7
ABB
Circuit diagram
EFS2
3AXD10001968696
Item Des.
= 01
+ 01.2
Rev.
B
Sheet
001a
001b
Cont.
Resp. Dept.
ABB Ref. No.
EPLAN Doc. No.
SAP Doc. No.
Title
Prep.
Joni Tuomi
27.11.2023
App.
Mika Asikainen
27.11.2023
Project
ACS880-204LC
4xR7i
Customer
Example Circuit Diagrams
Cust. Doc. No.
Cust. Ref. No.
EXTERNAL MAIN SUPPLY
-INPUT1
ACTUAL SUPPLY VOLTAGE
690V
50Hz
VOLTAGE MEASUREMENT
CHARGING SWITCH
OVER TEMP. SUPERVISION
MAIN BREAKER
-Q1
#Main Breaker
ABB Accessory
/030a/2D
2000A
/002a/1A
-F3.11:1
/002a/1A
-F3.12:1
/002a/1A
-F3.13:1
-F6.1
-X6.1
/020a/8E
-X6.99:4
/002a/3A
-X6.10:1
/050b/2B
-F3.3
-F3.2
-F3.1
-Q1V1:3
-Q1U1:3
-Q1W1:3
/001b/2F
-Q4:5L3
/001b/2F
-Q4:3L2
/001b/2F
-Q4:1L1
#Charging Kit
ABB Accessory
-Q3
40A
-F4
35A
-Q1U1:1
-Q1V1:1
-Q1W1:1
-F5
1-1.6A
/007a/5D
-A7:-XU1:U1
/007a/6D
-A7:-XU1:V1
/007a/6D
-A7:-XU1:W1
CABINET COMMON PE BUSBAR
-L1
-L2
-L3
-PE

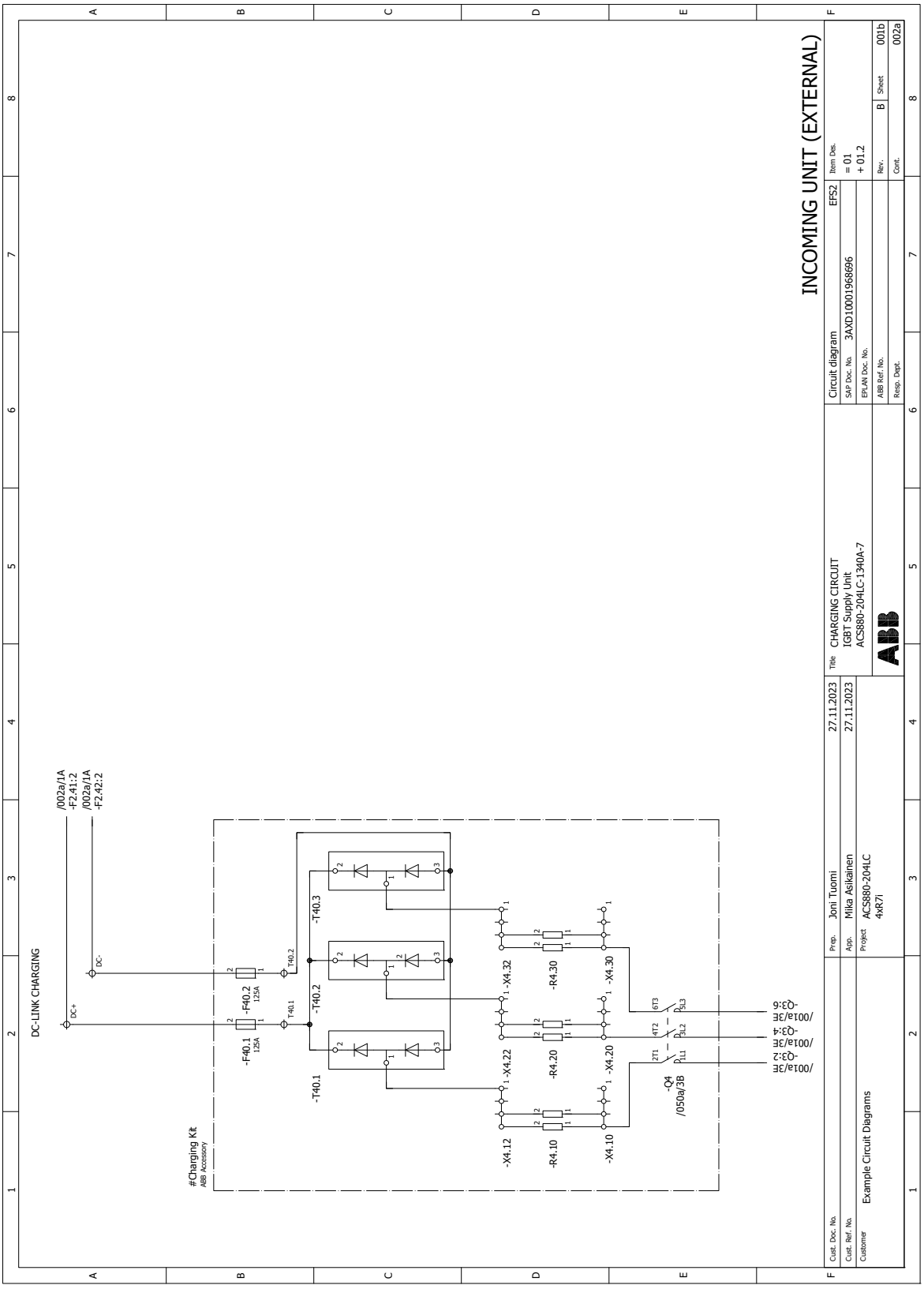
INCOMING UNIT (EXTERNAL)
DC-LINK CHARGING
/002a/1A
-F2.41:2
/002a/1A
-F2.42:2
DC+
DC-
-F40.1
125A
-F40.2
125A
T40.1
T40.2
-T40.1
-T40.2
-T40.3
#Charging Kit
ABB Accessory
-X4.12
-X4.22
-X4.10
-X4.20
-X4.32
-X4.30
-R4.10
-R4.20
-R4.30
-Q4
/050a/3B
/001a/3E
-Q3:2
/001a/3E
-Q3:4
/001a/3E
-Q3:6
Cust. Doc. No.
Cust. Ref. No.
Customer
Example Circuit Diagrams
Prep.
Joni Tuomi
27.11.2023
App.
Mika Asikainen
27.11.2023
Project
ACS880-204LC
4xR7i
Title
CHARGING CIRCUIT
IGBT Supply Unit
ACS880-204LC-1340A-7
Circuit diagram
EFS2
SAP Doc. No.
3AXD10001968696
EPLAN Doc. No.
ABB Ref. No.
Resp. Dept.
Item Des.
= 01
+ 01.2
Rev.
B
Sheet
001b
Cont.
002a

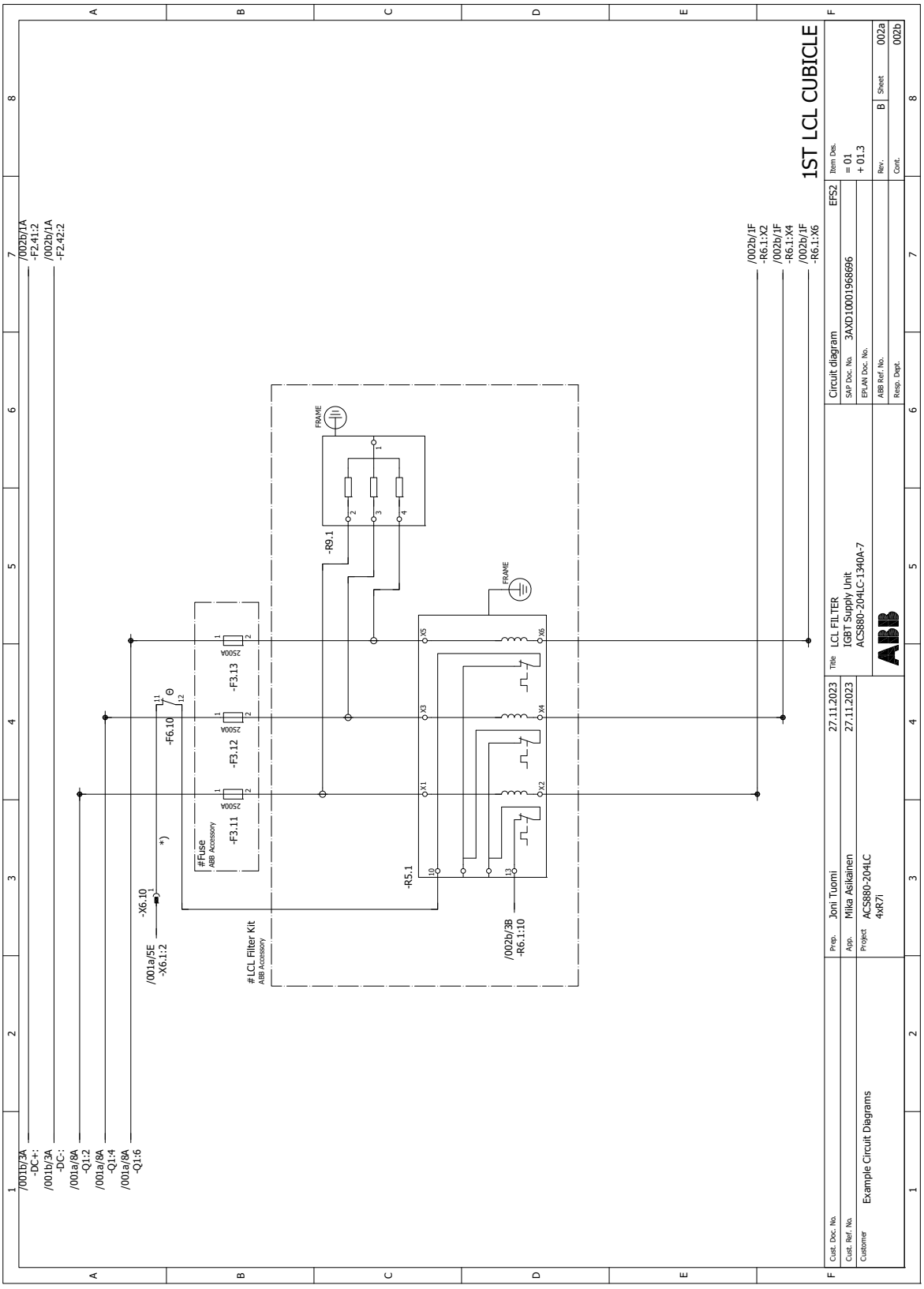
1ST LCL CUBICLE
LCL FILTER
IGBT Supply Unit
ACS880-204LC-1340A-7
Circuit diagram
3AXD10001968696
EFS2
Example Circuit Diagrams
ACS880-204LC
4xR7i
Joni Tuomi
Mika Asikainen
27.11.2023
#LCL Filter Kit
#Fuse
-F3.11
-F3.12
-F3.13
-F6.10
-X6.10
-R5.1
-R9.1
FRAME
/001b/3A -DC+:
/001b/3A -DC-:
/001a/8A -Q1:2
/001a/8A -Q1:4
/001a/8A -Q1:6
/001a/5E -X6.1:2
/002b/3B -R6.1:10
/002b/1A -F2.41:2
/002b/1A -F2.42:2
/002b/1F -R6.1:X2
/002b/1F -R6.1:X4
/002b/1F -R6.1:X6

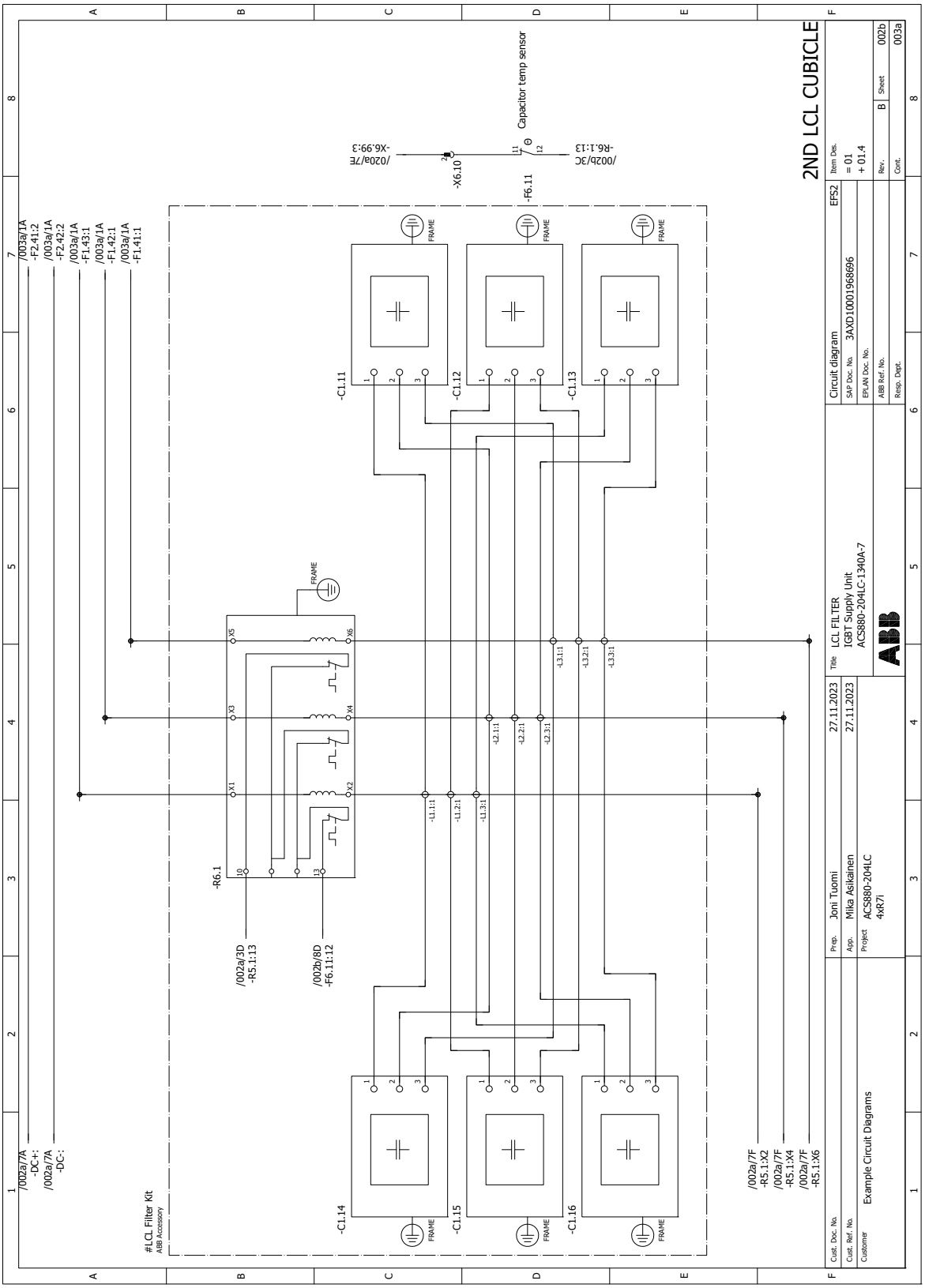
2ND LCL CUBICLE
Capacitor temp sensor
-X6.10
-F6.11
/020a/7E
-X6.99:3
/002b/3C
-R6.1:13
-C1.11
-C1.12
-C1.13
-C1.14
-C1.15
-C1.16
-R6.1
FRAME
/002a/3D
-R5.1:13
/002b/8D
-F6.11:12
/002a/7A
-DC+:
/002a/7A
-DC-:
/002a/7F
-R5.1:X2
/002a/7F
-R5.1:X4
/002a/7F
-R5.1:X6
#LCL Filter Kit
ABB Accessory
Circuit diagram
EFS2
SAP Doc. No.
3AXD10001968696
EPLAN Doc. No.
ABB Ref. No.
Resp. Dept.
Item Des.
= 01
+ 01.4
Rev.
B
Sheet
002b
Cont.
003a
Title
LCL FILTER
IGBT Supply Unit
ACS880-204LC-1340A-7
ABB
Prep.
Joni Tuomi
27.11.2023
App.
Mika Asikainen
27.11.2023
Project
ACS880-204LC
4xR7i
Cust. Doc. No.
Cust. Ref. No.
Customer
Example Circuit Diagrams

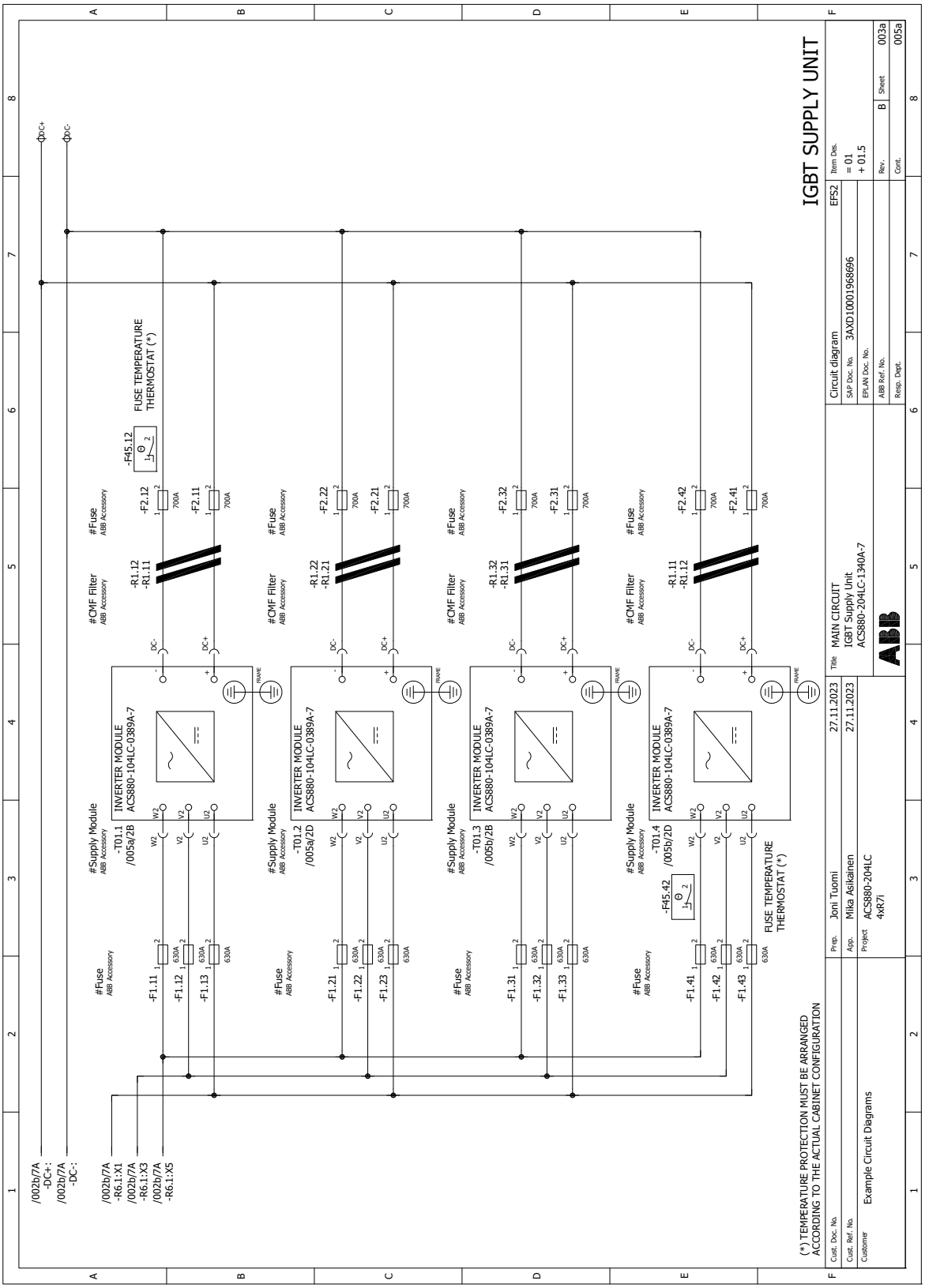
IGBT SUPPLY UNIT
INVERTER MODULE ACS880-104LC-0389A-7
-T01.1 /005a/2B
-T01.2 /005a/2D
-T01.3 /005b/2B
-T01.4 /005b/2D
-R1.12 -R1.11
-R1.22 -R1.21
-R1.32 -R1.31
-R1.11 -R1.12
-F2.12 -F2.11
-F2.22 -F2.21
-F2.32 -F2.31
-F2.42 -F2.41
-F45.12
-F45.42
FUSE TEMPERATURE THERMOSTAT (*)
-F1.11 -F1.12 -F1.13
-F1.21 -F1.22 -F1.23
-F1.31 -F1.32 -F1.33
-F1.41 -F1.42 -F1.43
630A
700A
#Fuse
#CMF Filter
#Supply Module
ABB Accessory
/002b/7A -DC+:
/002b/7A -DC-:
/002b/7A -R6.1:X1
/002b/7A -R6.1:X3
/002b/7A -R6.1:X5
(*) TEMPERATURE PROTECTION MUST BE ARRANGED ACCORDING TO THE ACTUAL CABINET CONFIGURATION
Cust. Doc. No.
Cust. Ref. No.
Customer
Example Circuit Diagrams
Prep. Joni Tuomi 27.11.2023
App. Mika Asikainen 27.11.2023
Project ACS880-204LC 4xR7i
Title MAIN CIRCUIT IGBT Supply Unit ACS880-204LC-1340A-7
Circuit diagram EFS2
SAP Doc. No. 3AXD10001968696
EPLAN Doc. No.
ABB Ref. No.
Resp. Dept.
Item Des. = 01 + 01.5
Rev. B Sheet 003a
Cont. 005a

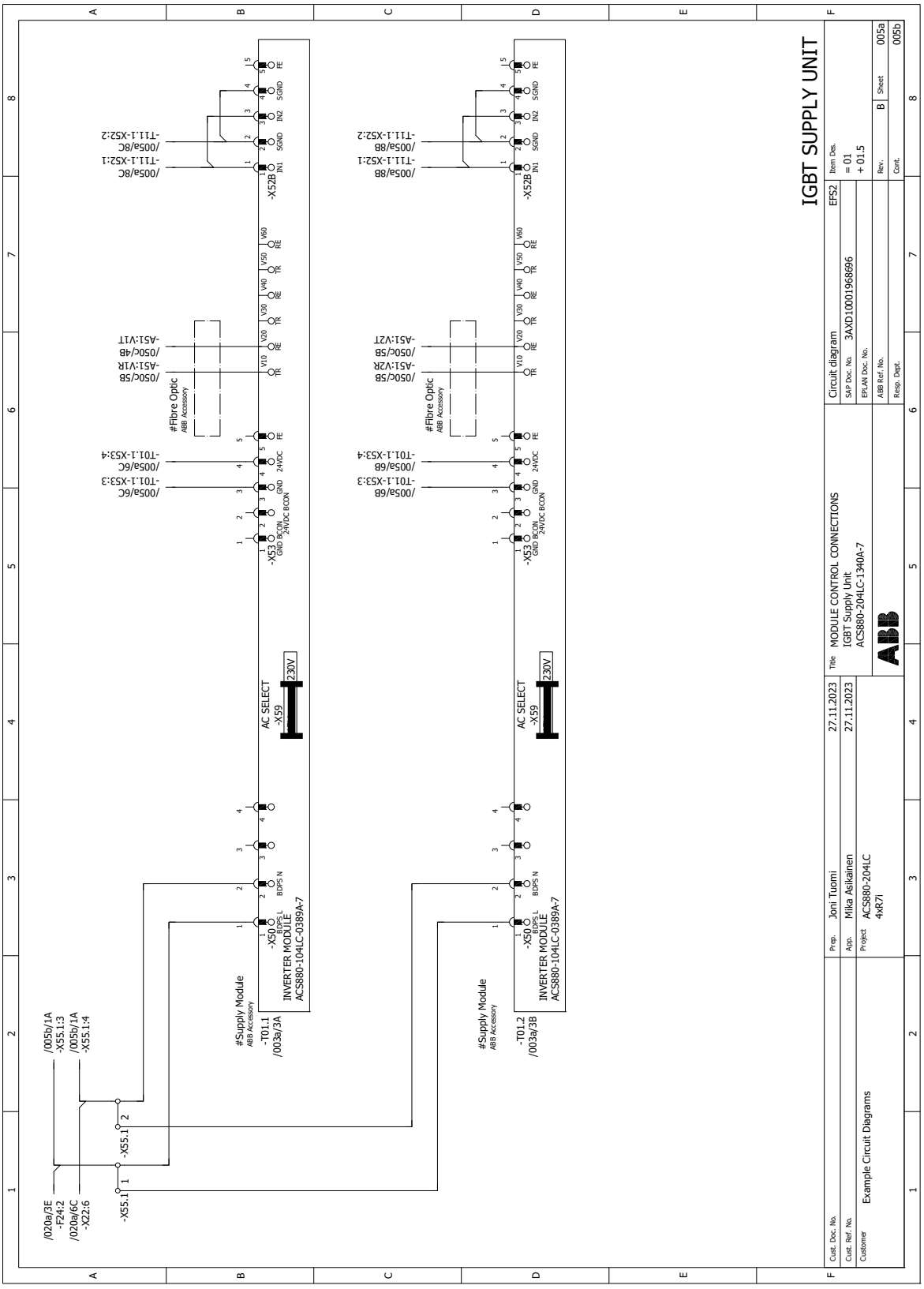
IGBT SUPPLY UNIT
MODULE CONTROL CONNECTIONS
IGBT Supply Unit
ACS880-204LC-1340A-7
Circuit diagram
EFS2
3AXD10001968696
ABB
Example Circuit Diagrams
ACS880-204LC
4xR7i
Joni Tuomi
Mika Asikainen
27.11.2023
27.11.2023
INVERTER MODULE
ACS880-104LC-0389A-7
#Supply Module
#Fibre Optic
AC SELECT
-X59
230V
-X52B
-X53
-X50
-T01.1
-T01.2
-A51:V1R
-A51:V1T
-A51:V2R
-A51:V2T
/005a/8C
/005a/8B
/005a/6C
/005a/6B
/005c/5B
/005c/4B
/003a/3A
/003a/3B
/005b/1A
/020a/3E
/020a/6C
-X55.1
-X22.6
-F24:2

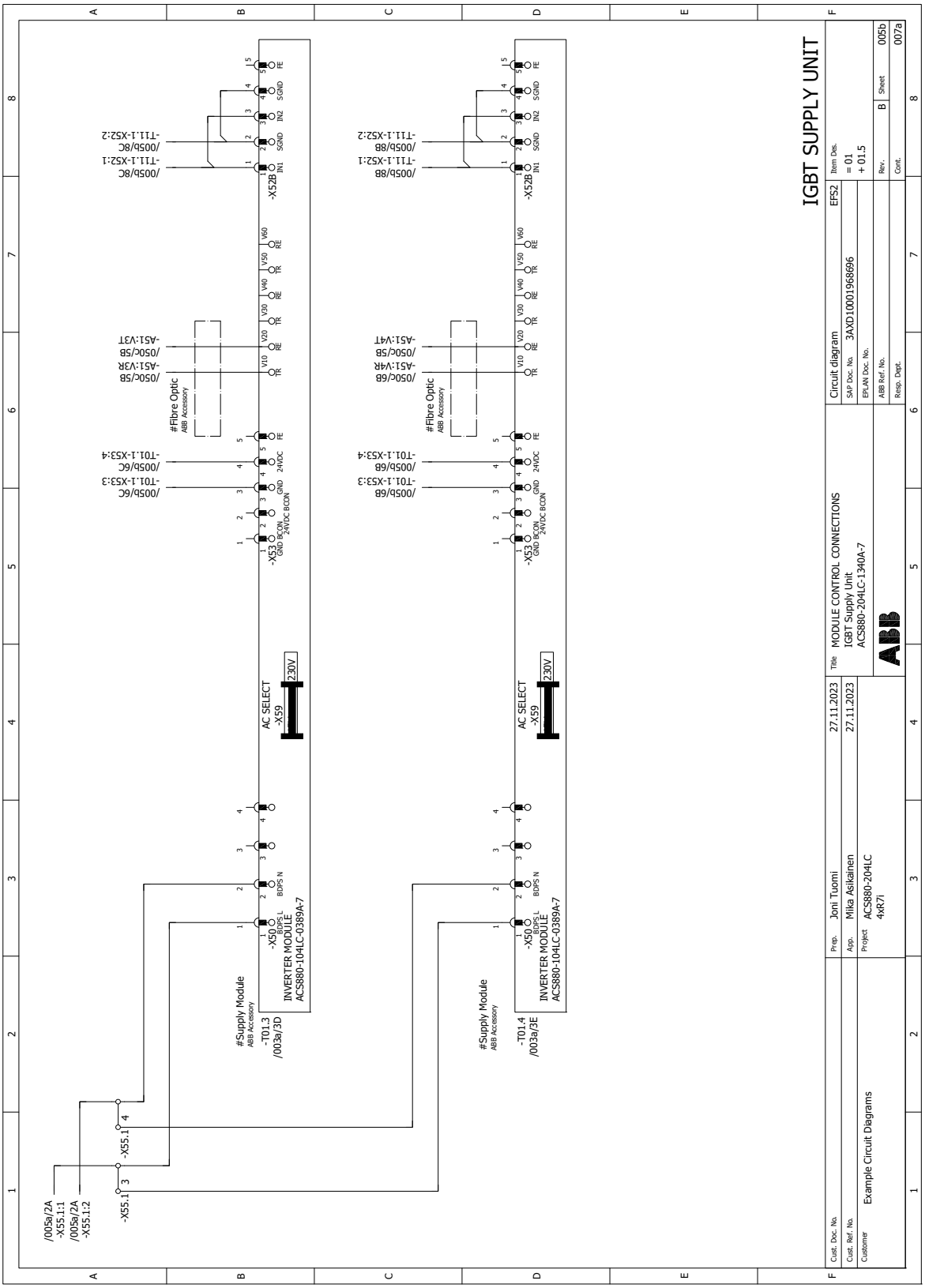
IGBT SUPPLY UNIT
MODULE CONTROL CONNECTIONS
IGBT Supply Unit
ACS880-204LC-1340A-7
Circuit diagram
EFS2
3AXD10001968696
Example Circuit Diagrams
ACS880-204LC
4xR7i
Joni Tuomi
Mika Asikainen
27.11.2023
INVERTER MODULE
ACS880-104LC-0389A-7
#Supply Module
#Fibre Optic
AC SELECT
-X59
230V
-X50
-X53
-X52B
-A51:V3R
-A51:V3T
-A51:V4R
-A51:V4T
-T01.3
/003a/3D
-T01.4
/003a/3E
/005a/2A
-X55.1:1
/005a/2A
-X55.1:2
-X55.1
/005b/8C
-T11.1-X52:1
/005b/8C
-T11.1-X52:2
/050c/5B
/005b/6C
-T01.1-X53:3
/005b/6C
-T01.1-X53:4
/005b/8B
-T11.1-X52:2
/005b/8B
-T11.1-X52:1
/050c/6B
/050c/5B
/005b/6B
-T01.1-X53:4
/005b/6B
-T01.1-X53:3

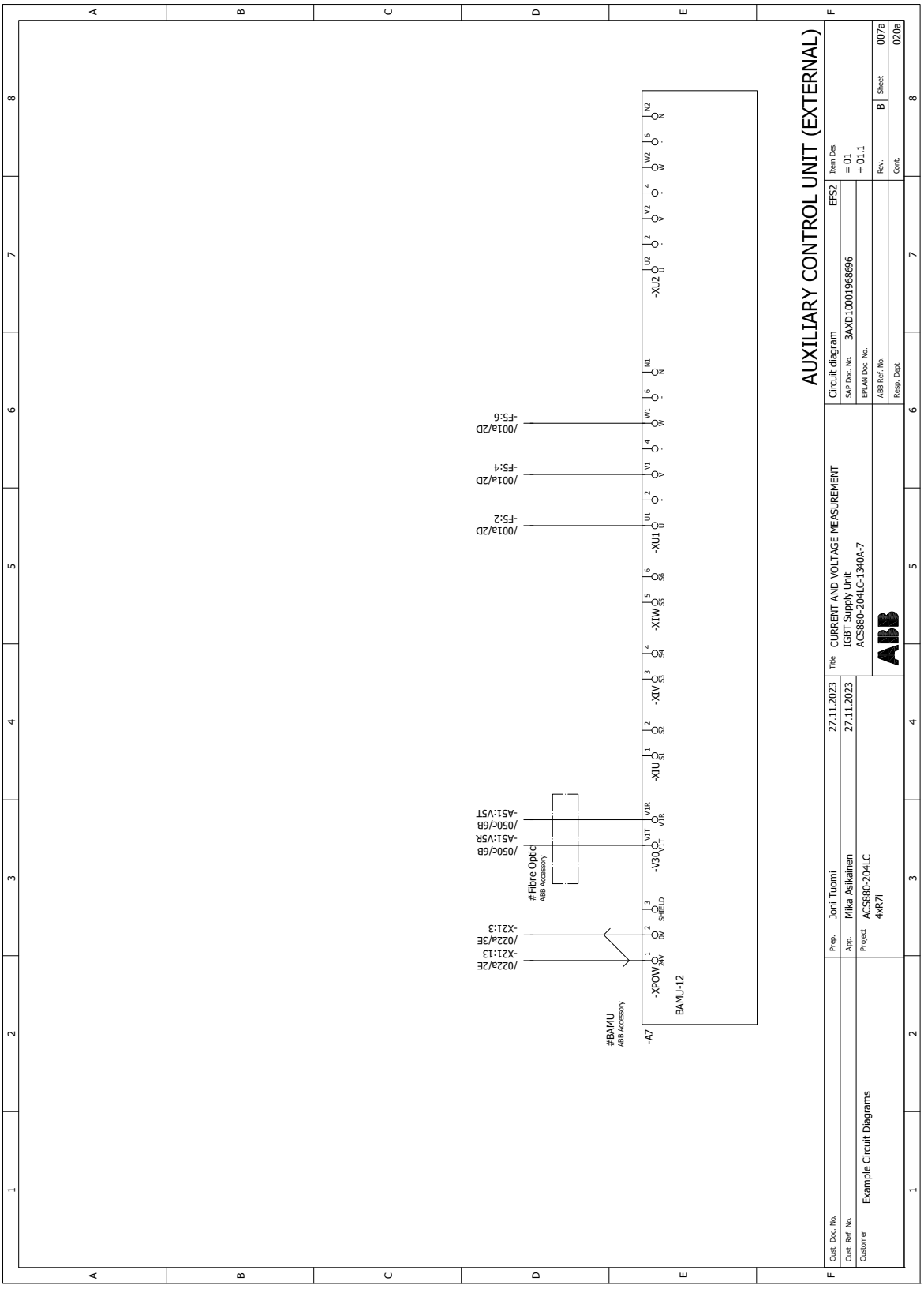
AUXILIARY CONTROL UNIT (EXTERNAL)
Circuit diagram
EFS2
SAP Doc. No.
3AXD10001968696
EPLAN Doc. No.
ABB Ref. No.
Resp. Dept.
Item Des.
= 01
+ 01.1
Rev.
B
Sheet
007a
Cont.
020a
Title
CURRENT AND VOLTAGE MEASUREMENT
IGBT Supply Unit
ACS880-204LC-1340A-7
Prep.
Joni Tuomi
27.11.2023
App.
Mika Asikainen
27.11.2023
Project
ACS880-204LC
4xR7i
Cust. Doc. No.
Cust. Ref. No.
Customer
Example Circuit Diagrams
-A7
BAMU-12
#BAMU
ABB Accessory
-XPOW
-XIU
-XIV
-XIW
-XU1
-XU2
-V30
#Fibre Optic
ABB Accessory
/022a/2E
-X21:13
/022a/3E
-X21:3
/050c/6B
-A51:V5R
/050c/6B
-A51:V5T
/001a/2D
-F5:2
/001a/2D
-F5:4
/001a/2D
-F5:6

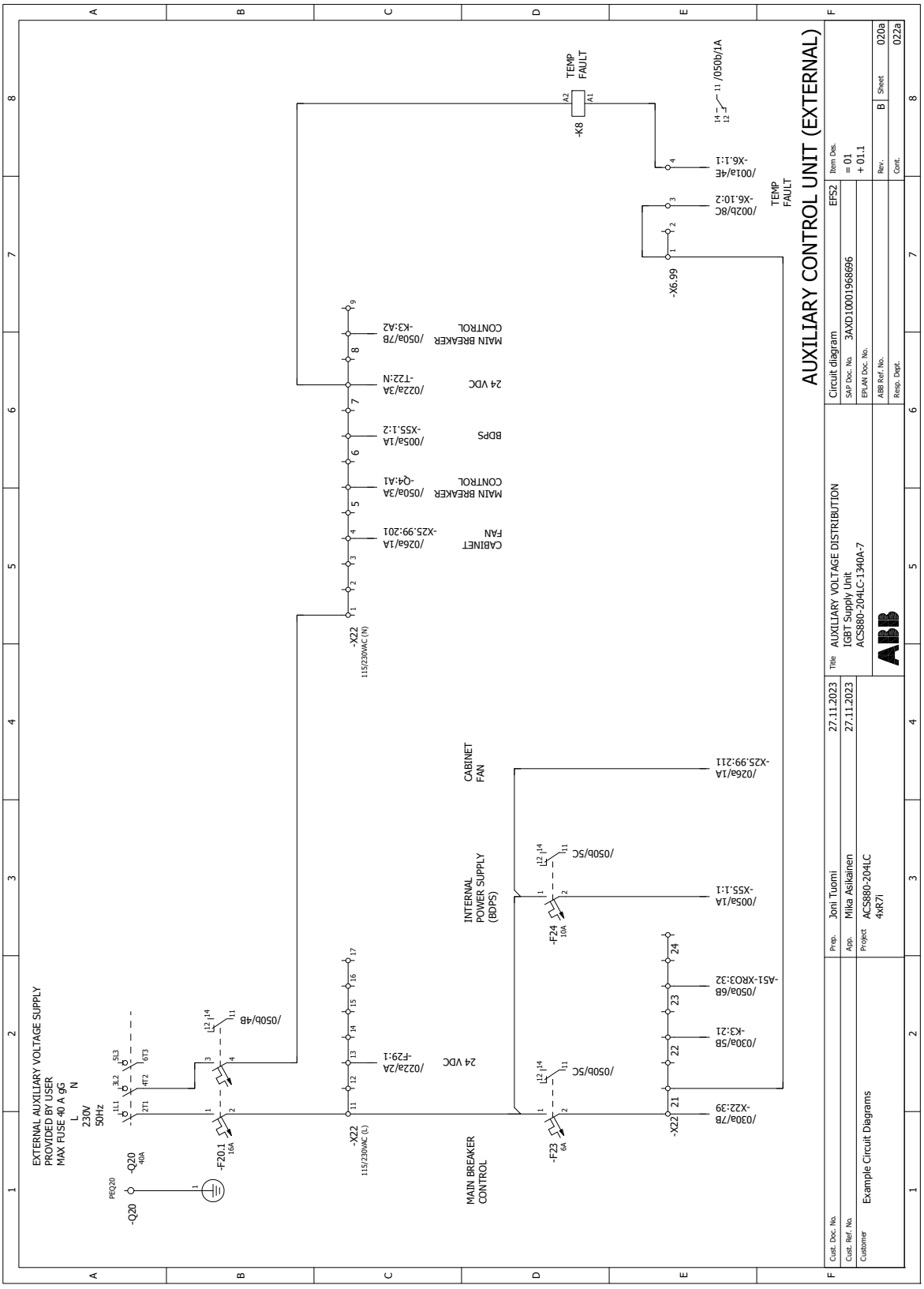
AUXILIARY CONTROL UNIT (EXTERNAL)
EXTERNAL AUXILIARY VOLTAGE SUPPLY
PROVIDED BY USER
MAX FUSE 40 A gG
L
N
230V
50Hz
-Q20
40A
PEQ20
-F20.1
16A
/050b/4B
-X22
115/230VAC (L)
-X22
115/230VAC (N)
/022a/2A
-F29:1
24 VDC
MAIN BREAKER
CONTROL
-F23
6A
/050b/5C
-F24
10A
/050b/5C
INTERNAL
POWER SUPPLY
(BDPS)
CABINET
FAN
/026a/1A
-X25.99:201
/050a/3A
-Q4:A1
MAIN BREAKER
CONTROL
/005a/1A
-X55.1:2
BDPS
/022a/3A
-T22:N
24 VDC
/050a/7B
-K3:A2
MAIN BREAKER
CONTROL
/026a/1A
-X25.99:211
/005a/1A
-X55.1:1
/050a/6B
-A51-XRO3:32
/030a/5B
-K3:21
/030a/7B
-X22:39
-X22
-X6.99
/002b/8C
-X6.10:2
/001a/4E
-X6.1:1
TEMP
FAULT
-K8
TEMP
FAULT
/050b/1A
Title
AUXILIARY VOLTAGE DISTRIBUTION
IGBT Supply Unit
ACS880-204LC-1340A-7
Prep.
Joni Tuomi
27.11.2023
App.
Mika Asikainen
27.11.2023
Project
ACS880-204LC
4xR7i
Customer
Example Circuit Diagrams
Cust. Doc. No.
Cust. Ref. No.
Circuit diagram
EFS2
SAP Doc. No.
3AXD10001968696
EPLAN Doc. No.
ABB Ref. No.
Resp. Dept.
Item Des.
= 01
+ 01.1
Rev.
B
Sheet
020a
Cont.
022a

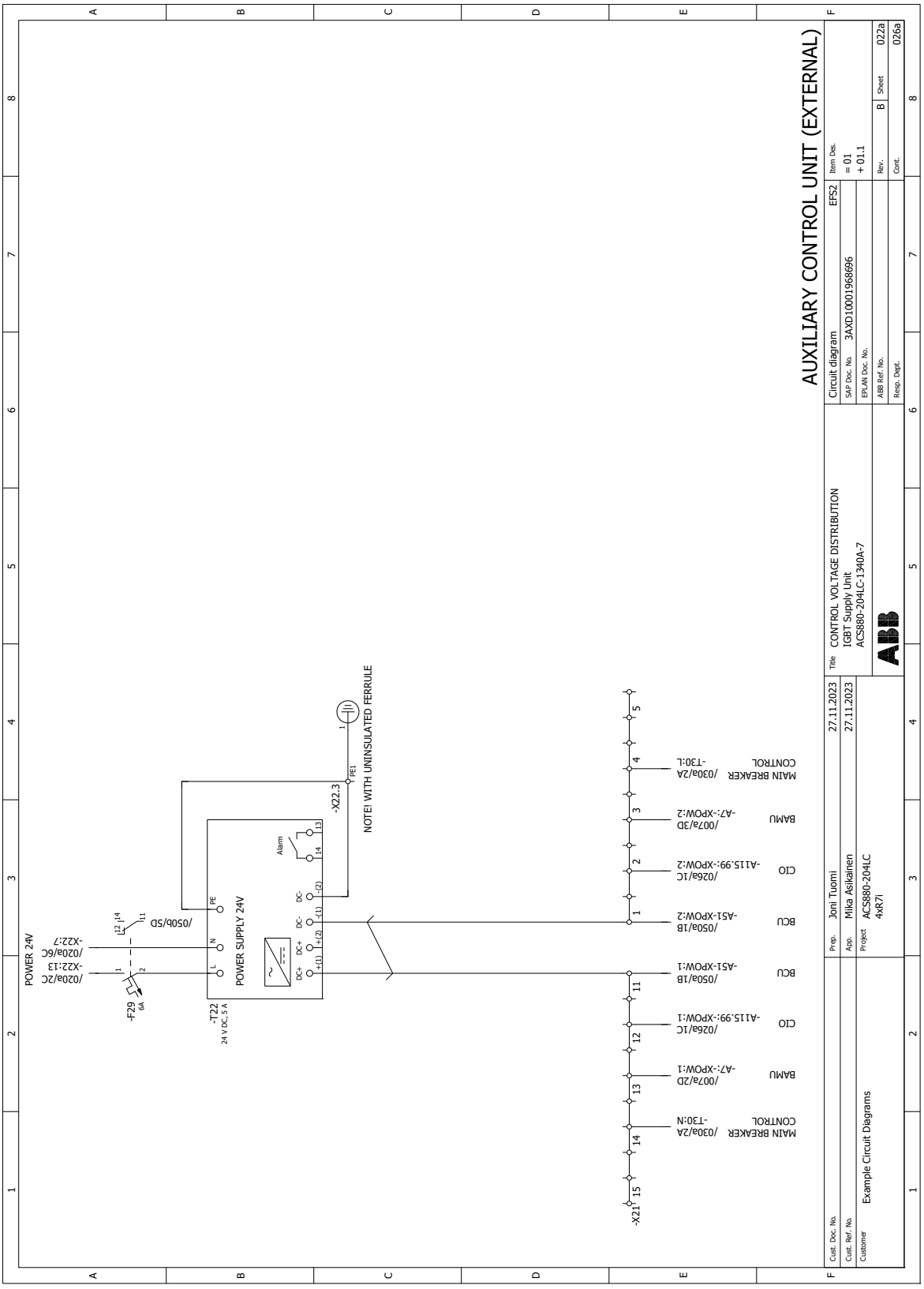
AUXILIARY CONTROL UNIT (EXTERNAL)
POWER 24V
/020a/2C
-X22:13
/020a/6C
-X22:7
/050b/5D
-F29
6A
-T22
24 V DC, 5 A
POWER SUPPLY 24V
PE
N
L
DC+
DC-
+(1)
+(2)
-(1)
-(2)
Alarm
13
14
-X22.3
PE1
NOTE! WITH UNINSULATED FERRULE
-X21
MAIN BREAKER CONTROL
/030a/2A
-T30:L
BAMU
/007a/3D
-A7:-XPOW:2
CIO
/026a/1C
-A115.99:-XPOW:2
BCU
/050a/1B
-A51-XPOW:2
BCU
/050a/1B
-A51-XPOW:1
CIO
/026a/1C
-A115.99:-XPOW:1
BAMU
/007a/2D
-A7:-XPOW:1
MAIN BREAKER CONTROL
/030a/2A
-T30:N
Cust. Doc. No.
Cust. Ref. No.
Customer
Example Circuit Diagrams
Prep.
Joni Tuomi
27.11.2023
App.
Mika Asikainen
27.11.2023
Project
ACS880-204LC
4xR7i
Title
CONTROL VOLTAGE DISTRIBUTION
IGBT Supply Unit
ACS880-204LC-1340A-7
Circuit diagram
EFS2
SAP Doc. No.
3AXD10001968696
EPLAN Doc. No.
ABB Ref. No.
Resp. Dept.
Item Des.
= 01
+ 01.1
Rev.
B
Sheet
022a
Cont.
026a

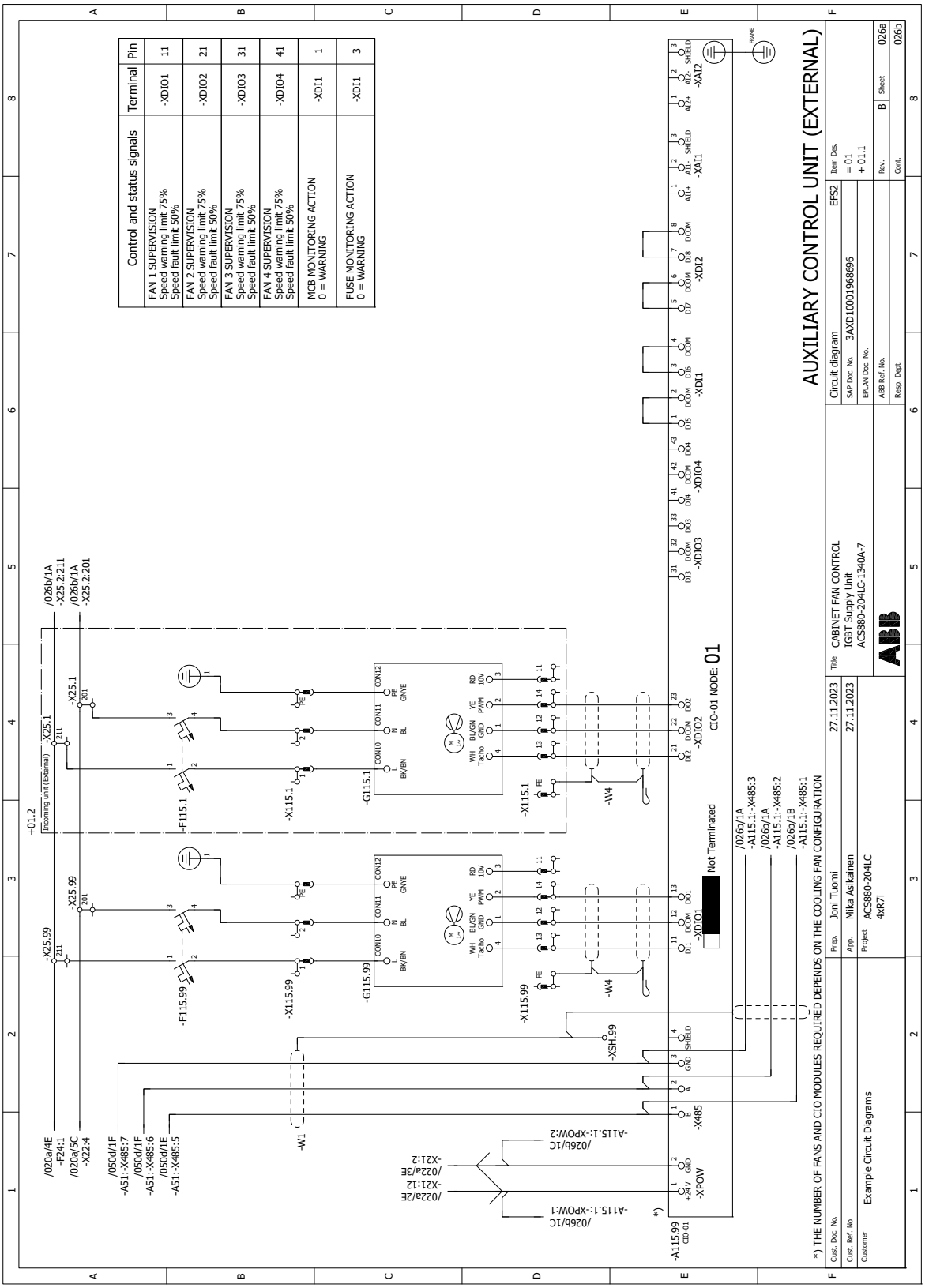
AUXILIARY CONTROL UNIT (EXTERNAL)
CIO-01 NODE: 01
Not Terminated
*) THE NUMBER OF FANS AND CIO MODULES REQUIRED DEPENDS ON THE COOLING FAN CONFIGURATION
Control and status signals
Terminal
Pin
FAN 1 SUPERVISION
Speed warning limit 75%
Speed fault limit 50%
-XDIO1
11
FAN 2 SUPERVISION
Speed warning limit 75%
Speed fault limit 50%
-XDIO2
21
FAN 3 SUPERVISION
Speed warning limit 75%
Speed fault limit 50%
-XDIO3
31
FAN 4 SUPERVISION
Speed warning limit 75%
Speed fault limit 50%
-XDIO4
41
MCB MONITORING ACTION
0 = WARNING
-XDI1
1
FUSE MONITORING ACTION
0 = WARNING
-XDI1
3
Title
CABINET FAN CONTROL
IGBT Supply Unit
ACS880-204LC-1340A-7
Circuit diagram
EFS2
SAP Doc. No.
3AXD10001968696
EPLAN Doc. No.
ABB Ref. No.
Resp. Dept.
Item Des.
= 01
+ 01.1
Rev.
B
Sheet
026a
Cont.
026b
Prep.
Joni Tuomi
27.11.2023
App.
Mika Asikainen
27.11.2023
Project
ACS880-204LC
4xR7i
Cust. Doc. No.
Cust. Ref. No.
Customer
Example Circuit Diagrams

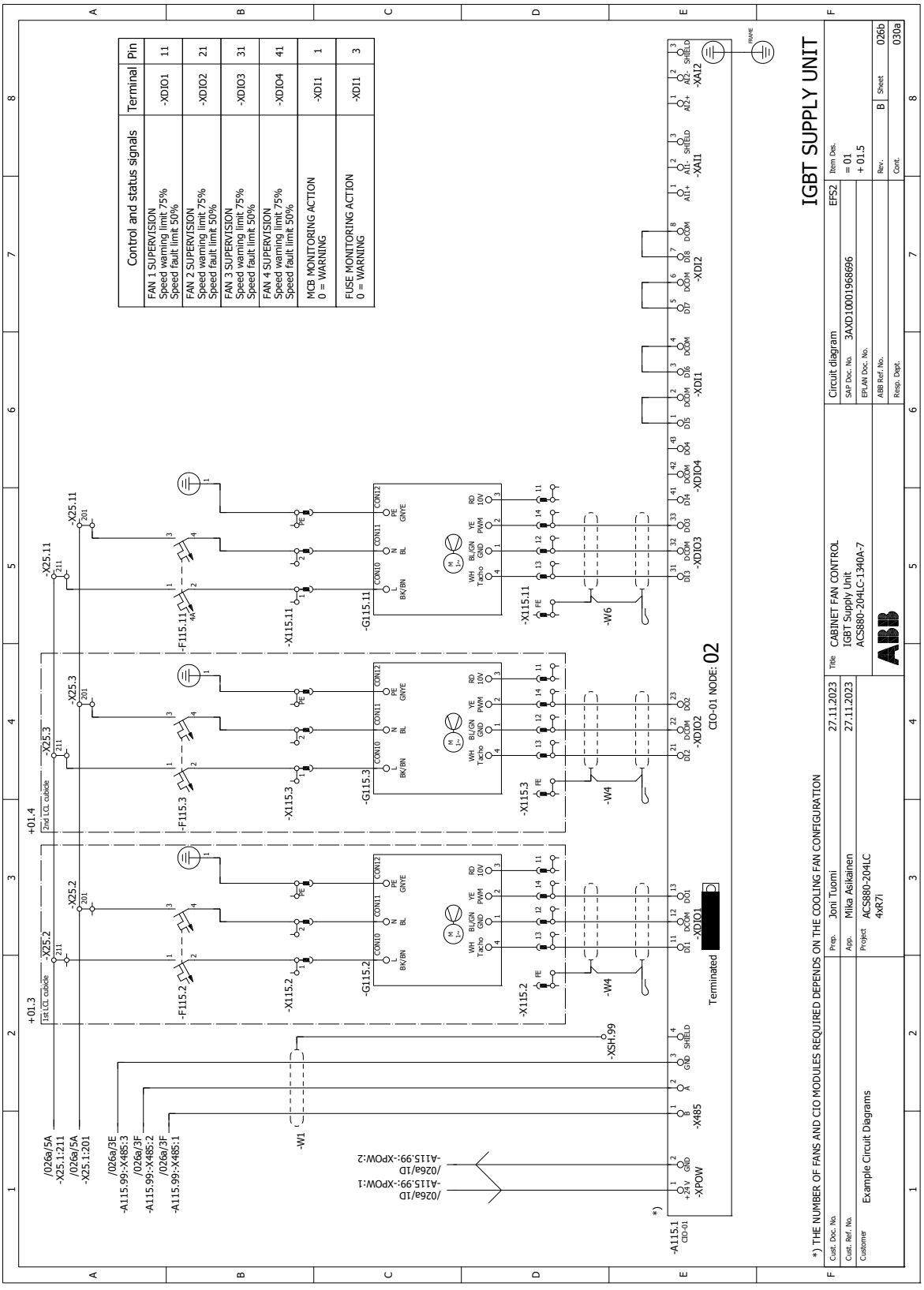
IGBT SUPPLY UNIT
CABINET FAN CONTROL
IGBT Supply Unit
ACS880-204LC-1340A-7
3AXD10001968696
EFS2
Example Circuit Diagrams
ACS880-204LC
4xR7i
Joni Tuomi
Mika Asikainen
27.11.2023
CIO-01 NODE: 02
Terminated
*) THE NUMBER OF FANS AND CIO MODULES REQUIRED DEPENDS ON THE COOLING FAN CONFIGURATION
Control and status signals
FAN 1 SUPERVISION Speed warning limit 75% Speed fault limit 50%
FAN 2 SUPERVISION Speed warning limit 75% Speed fault limit 50%
FAN 3 SUPERVISION Speed warning limit 75% Speed fault limit 50%
FAN 4 SUPERVISION Speed warning limit 75% Speed fault limit 50%
MCB MONITORING ACTION 0 = WARNING
FUSE MONITORING ACTION 0 = WARNING
Terminal
Pin
-XDIO1 11
-XDIO2 21
-XDIO3 31
-XDIO4 41
-XDI1 1
-XDI1 3

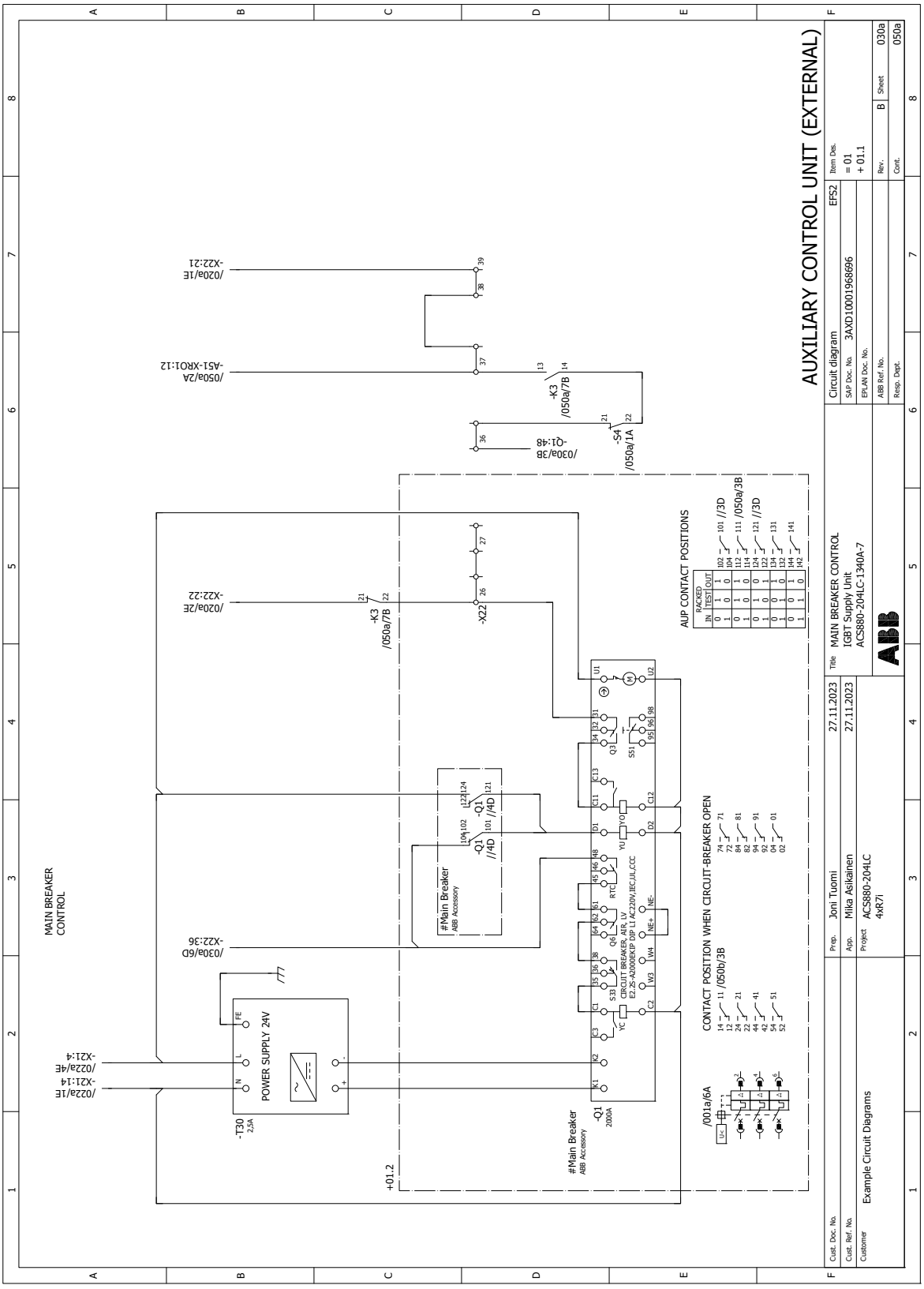
AUXILIARY CONTROL UNIT (EXTERNAL)
MAIN BREAKER CONTROL
POWER SUPPLY 24V
-T30
2,5A
#Main Breaker
ABB Accessory
Q1
2000A
CIRCUIT BREAKER, AIR, LV
E2.2S-A2000EKIP DIP LI AC220V,IEC,UL,CCC
AUP CONTACT POSITIONS
CONTACT POSITION WHEN CIRCUIT-BREAKER OPEN
/001a/6A
/050b/3B
/050a/3B
/050a/2A
-AS1-XRO1:12
/020a/1E
-XZ2:21
/020a/2E
-XZ2:22
/030a/6D
-XZ2:36
/022a/4E
-XZ1:4
/022a/1E
-XZ1:14
/030a/3B
-Q1:48
-K3
/050a/7B
-S4
/050a/1A
-X22
+01.2
Circuit diagram
EFS2
SAP Doc. No.
3AXD10001968696
EPLAN Doc. No.
ABB Ref. No.
Resp. Dept.
Item Des.
= 01
+ 01.1
Rev.
B
Sheet
030a
Cont.
050a
Title
MAIN BREAKER CONTROL
IGBT Supply Unit
ACS880-204LC-1340A-7
Prep.
Joni Tuomi
27.11.2023
App.
Mika Asikainen
27.11.2023
Project
ACS880-204LC
4xR7i
Cust. Doc. No.
Cust. Ref. No.
Customer
Example Circuit Diagrams

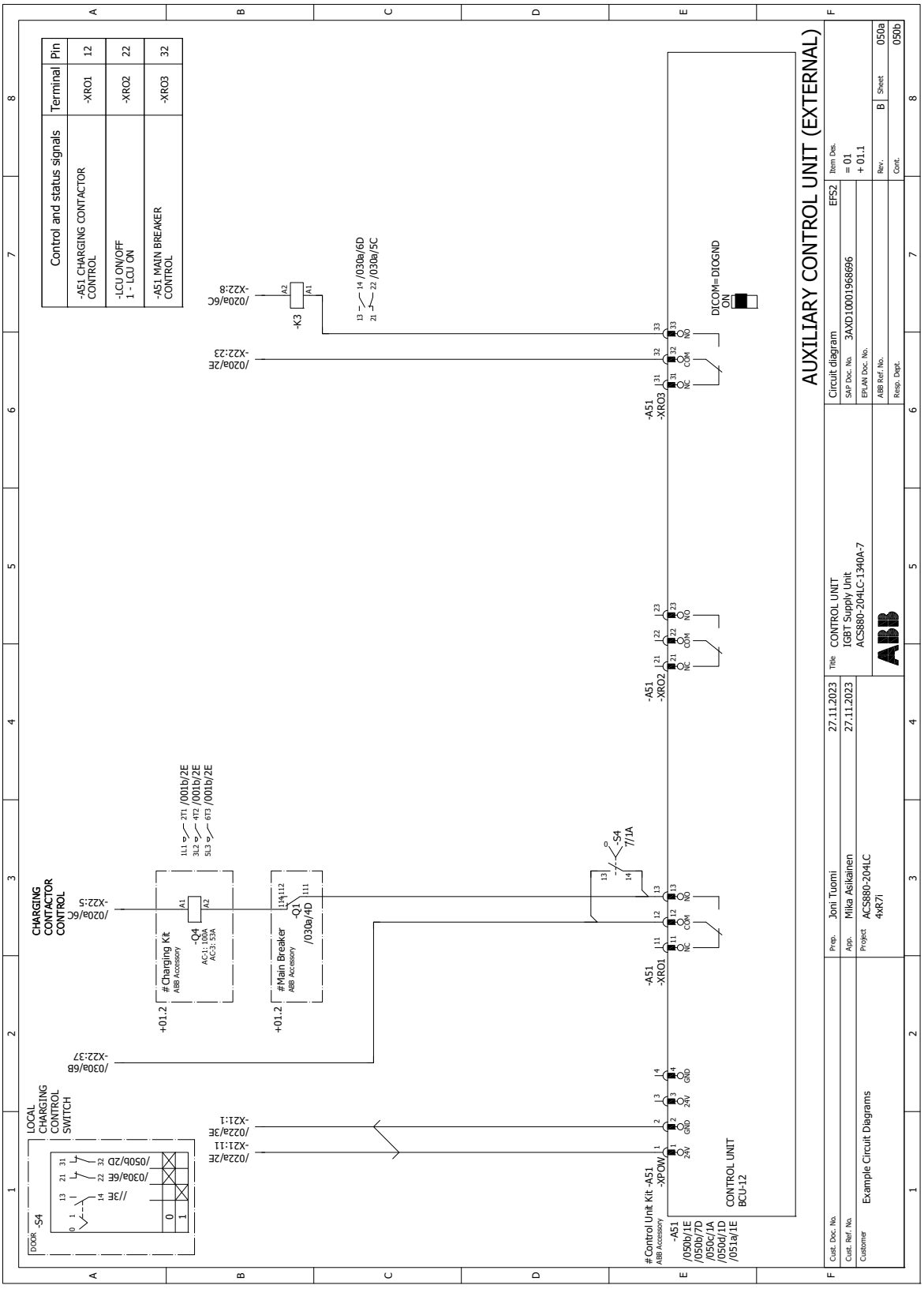
AUXILIARY CONTROL UNIT (EXTERNAL)
Control and status signals | Terminal | Pin
-A51 CHARGING CONTACTOR CONTROL | -XRO1 | 12
-LCU ON/OFF 1 - LCU ON | -XRO2 | 22
-A51 MAIN BREAKER CONTROL | -XRO3 | 32
CHARGING CONTACTOR CONTROL
LOCAL CHARGING CONTROL SWITCH
DOOR -S4
-S4 7/1A
-Q4 AC1: 100A AC3: 53A
-Q1 /030a/4D
-K3
DICOM=DIGGND ON
CONTROL UNIT BCU-12
#Control Unit Kit -A51 ABB Accessory
-A51 -XPOW
-A51 -XRO1
-A51 -XRO2
-A51 -XRO3
Cust. Doc. No.
Cust. Ref. No.
Customer
Example Circuit Diagrams
Prep. Joni Tuomi 27.11.2023
Appr. Mika Asikainen 27.11.2023
Project ACS880-204LC 4xR7i
Title CONTROL UNIT IGBT Supply Unit ACS880-204LC-1340A-7
Circuit diagram EFS2
SAP Doc. No. 3AXD10001968696
EPLAN Doc. No.
ABB Ref. No.
Resp. Dept.
Item Des. = 01 + 01.1
Rev. B Sheet 050a
Cont. 050b

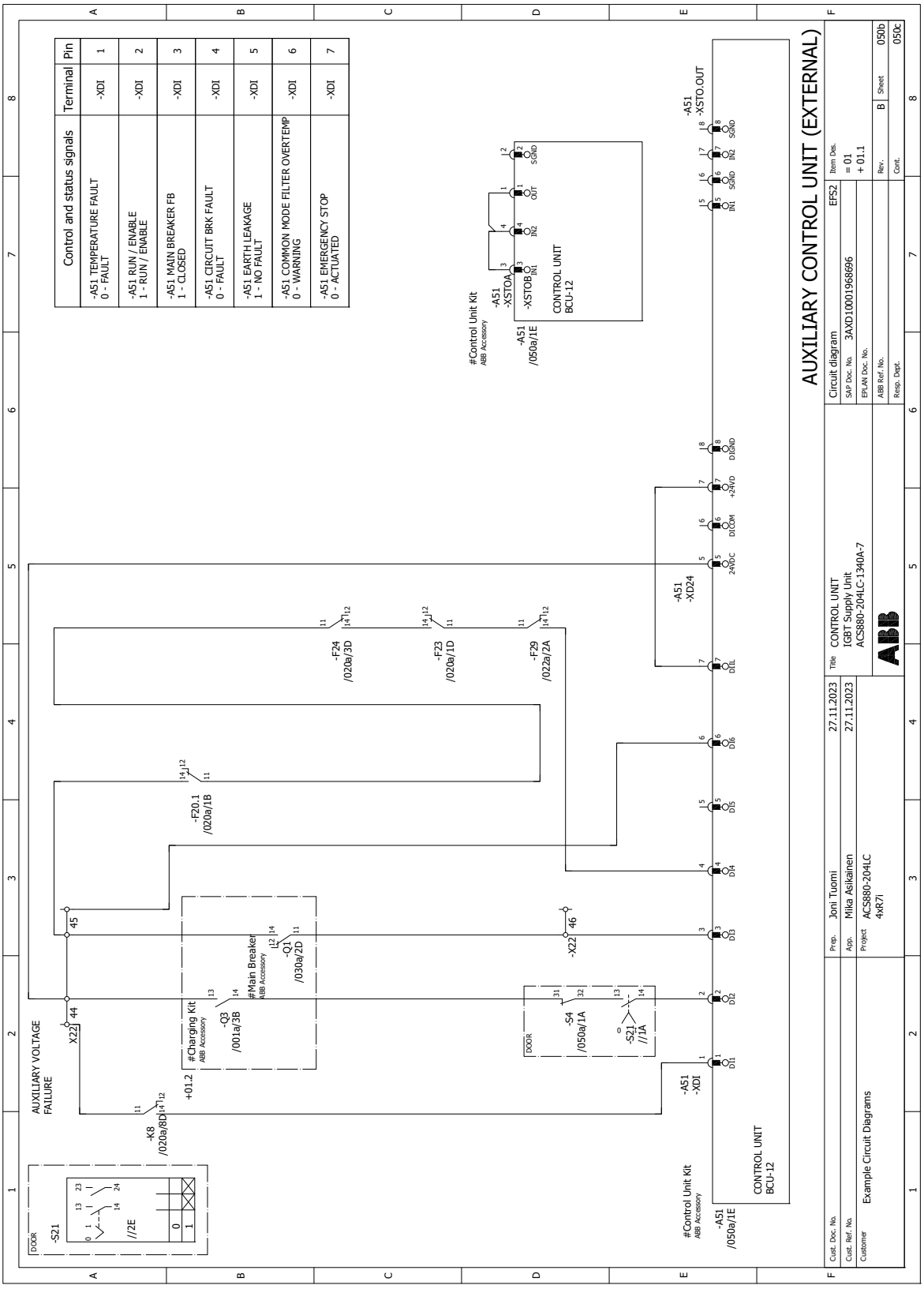
AUXILIARY CONTROL UNIT (EXTERNAL)
Control and status signals
-A51 TEMPERATURE FAULT 0 - FAULT
-A51 RUN / ENABLE 1 - RUN / ENABLE
-A51 MAIN BREAKER FB 1 - CLOSED
-A51 CIRCUIT BRK FAULT 0 - FAULT
-A51 EARTH LEAKAGE 1 - NO FAULT
-A51 COMMON MODE FILTER OVERTEMP 0 - WARNING
-A51 EMERGENCY STOP 0 - ACTUATED
Terminal
-XDI
Pin
1
2
3
4
5
6
7
AUXILIARY VOLTAGE FAILURE
#Charging Kit
#Main Breaker
#Control Unit Kit
CONTROL UNIT BCU-12
CONTROL UNIT IGBT Supply Unit ACS880-204LC-1340A-7
Circuit diagram
EFS2
3AXD10001968696
Example Circuit Diagrams
ACS880-204LC 4xR7i
27.11.2023
Joni Tuomi
Mika Asikainen

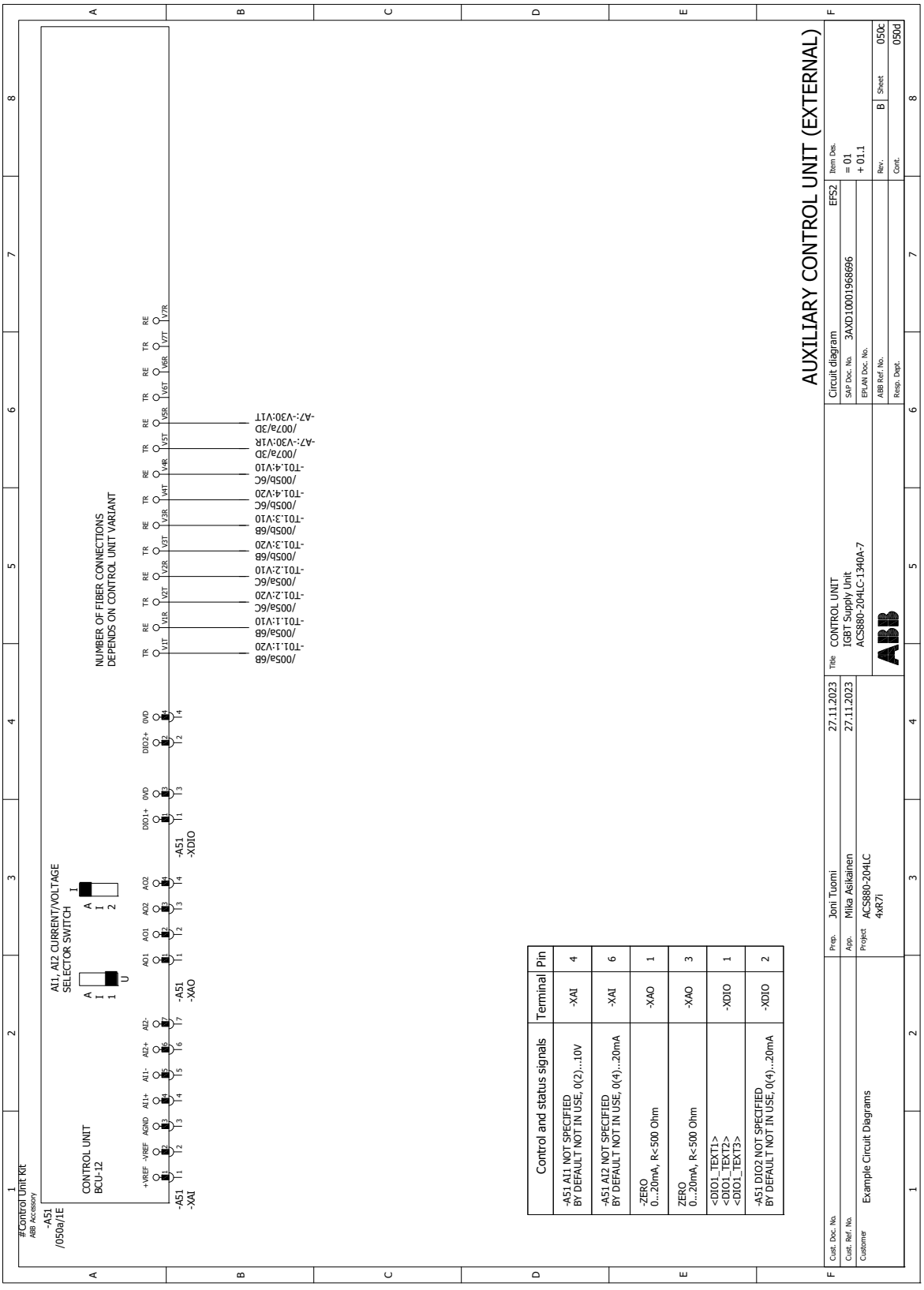
#Control Unit Kit
ABB Accessory
-A51
/050a/1E
CONTROL UNIT
BCU-I2
AI1, AI2 CURRENT/VOLTAGE
SELECTOR SWITCH
-A51
-XAI
-A51
-XAO
-A51
-XDIO
NUMBER OF FIBER CONNECTIONS
DEPENDS ON CONTROL UNIT VARIANT
-A7:-V30:V1T /007a/3D -TO1.1:V20 /005a/6B
-A7:-V30:V1R /007a/3D -TO1.1:V10 /005a/6B
-TO1.2:V20 /005a/6C
-TO1.2:V10 /005a/6C
-TO1.3:V20 /005b/6B
-TO1.3:V10 /005b/6B
-TO1.4:V20 /005b/6C
-TO1.4:V10 /005b/6C
/007a/3D -A7:-V30:V2R
/007a/3D -A7:-V30:V2T
Control and status signals
Terminal
Pin
-A51 AI1 NOT SPECIFIED
BY DEFAULT NOT IN USE, 0(2)...10V
-XAI
4
-A51 AI2 NOT SPECIFIED
BY DEFAULT NOT IN USE, 0(4)...20mA
-XAI
6
-ZERO
0...20mA, R<500 Ohm
-XAO
1
ZERO
0...20mA, R<500 Ohm
-XAO
3
<DIO1_TEXT1>
<DIO1_TEXT2>
<DIO1_TEXT3>
-XDIO
1
-A51 DIO2 NOT SPECIFIED
BY DEFAULT NOT IN USE, 0(4)...20mA
-XDIO
2
AUXILIARY CONTROL UNIT (EXTERNAL)
Cust. Doc. No.
Cust. Ref. No.
Customer
Example Circuit Diagrams
Prep.
Joni Tuomi
27.11.2023
App.
Mika Asikainen
27.11.2023
Project
ACS880-204LC
4xR7i
Title
CONTROL UNIT
IGBT Supply Unit
ACS880-204LC-1340A-7
Circuit diagram
EFS2
SAP Doc. No.
3AXD10001968696
EPLAN Doc. No.
ABB Ref. No.
Resp. Dept.
Item Des.
= 01
+ 01.1
Rev.
B
Sheet
050c
Cont.
050d

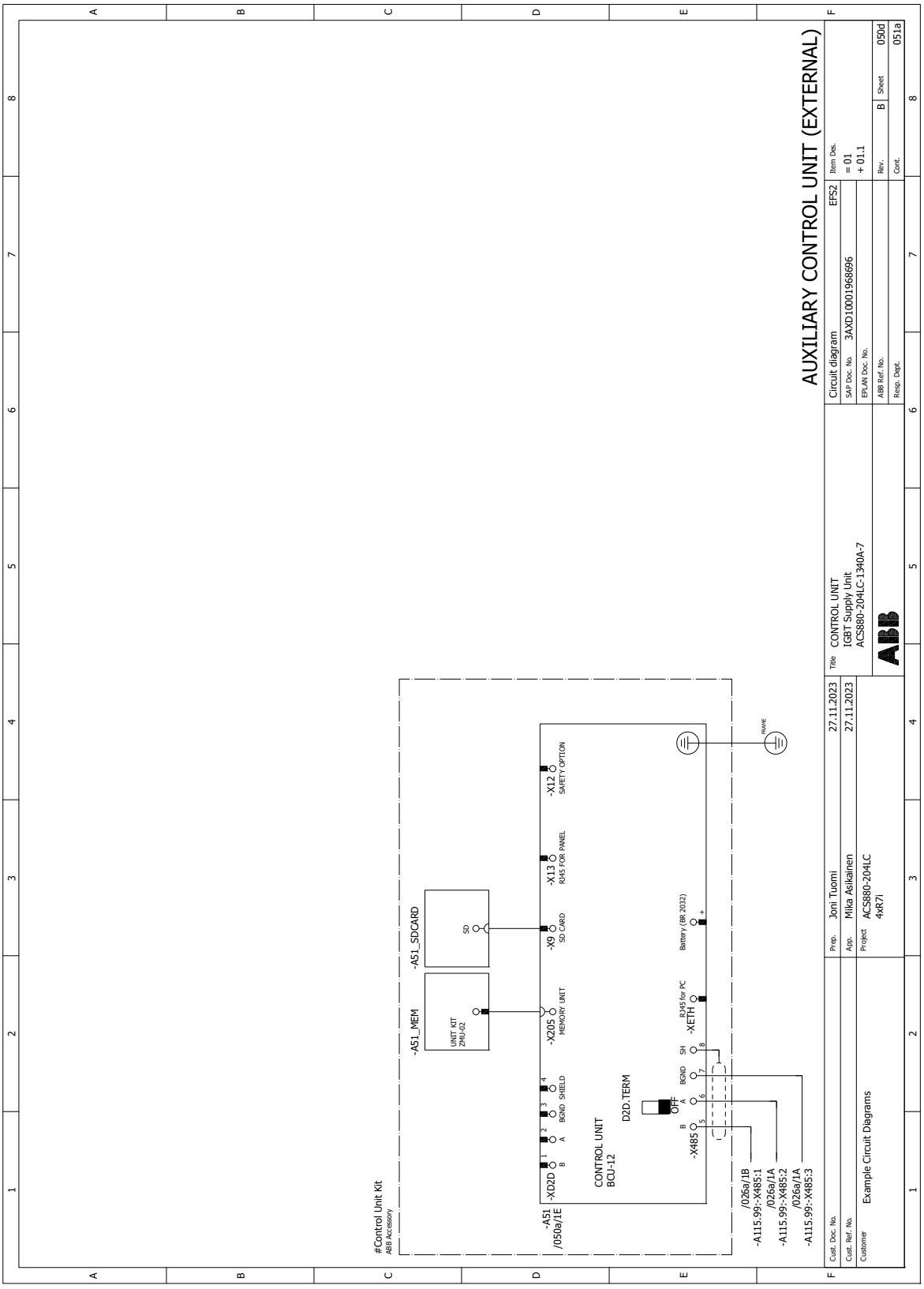
AUXILIARY CONTROL UNIT (EXTERNAL)
#Control Unit Kit
ABB Accessory
-A51_MEM
UNIT KIT
ZMU-02
-A51_SDCARD
SD
-X205
MEMORY UNIT
-X9
SD CARD
-X13
RJ45 FOR PANEL
-X12
SAFETY OPTION
-XD2D
B
A
BGND
SHIELD
CONTROL UNIT
BCU-12
D2D.TERM
OFF
-X485
BGND
SH
-XETH
RJ45 for PC
Battery (BR 2032)
FRAME
-A51
/050a/1E
/026a/1B
-A115.99:-X485:1
/026a/1A
-A115.99:-X485:2
/026a/1A
-A115.99:-X485:3
Cust. Doc. No.
Cust. Ref. No.
Customer
Example Circuit Diagrams
Prep.
Joni Tuomi
27.11.2023
App.
Mika Asikainen
27.11.2023
Project
ACS880-204LC
4xR7i
Title
CONTROL UNIT
IGBT Supply Unit
ACS880-204LC-1340A-7
Circuit diagram
EFS2
SAP Doc. No.
3AXD10001968696
EPLAN Doc. No.
ABB Ref. No.
Resp. Dept.
Item Des.
= 01
+ 01.1
Rev.
B
Sheet
050d
Cont.
051a

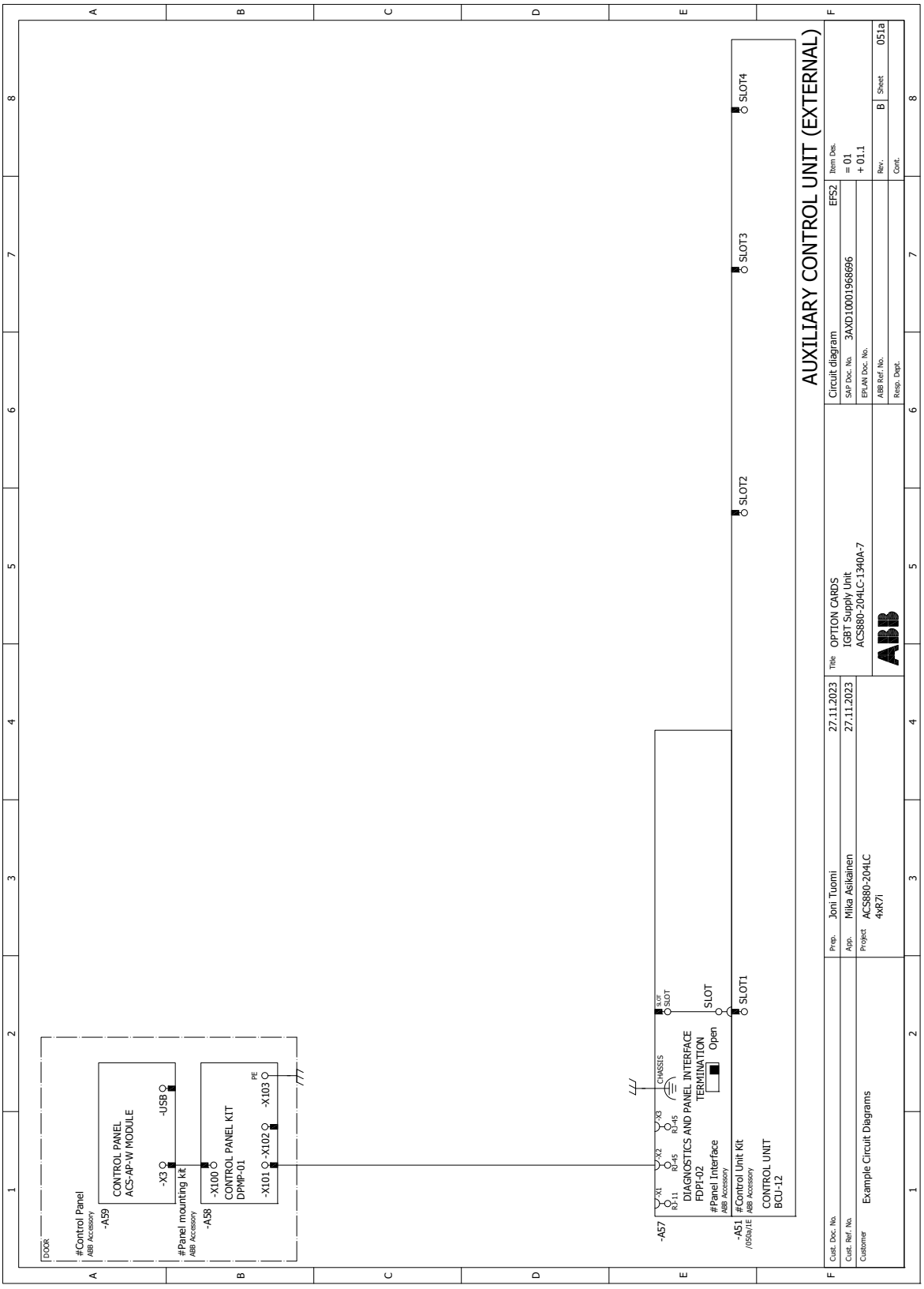
AUXILIARY CONTROL UNIT (EXTERNAL)
DOOR
#Control Panel
ABB Accessory
-A59
CONTROL PANEL
ACS-AP-W MODULE
-X3
-USB
#Panel mounting kit
ABB Accessory
-A58
-X100
CONTROL PANEL KIT
DPMP-01
-X101
-X102
-X103
PE
-A57
-X1
RJ-11
-X2
RJ-45
-X3
RJ-45
CHASSIS
DIAGNOSTICS AND PANEL INTERFACE
FDPI-02
#Panel Interface
ABB Accessory
TERMINATION
Open
CTF
SLOT
SLOT
-A51
/050a/1E
#Control Unit Kit
ABB Accessory
CONTROL UNIT
BCU-12
SLOT1
SLOT2
SLOT3
SLOT4
Cust. Doc. No.
Cust. Ref. No.
Customer
Example Circuit Diagrams
Prep.
Joni Tuomi
27.11.2023
App.
Mika Asikainen
27.11.2023
Project
ACS880-204LC
4xR7i
Title
OPTION CARDS
IGBT Supply Unit
ACS880-204LC-1340A-7
Circuit diagram
EFS2
SAP Doc. No.
3AXD10001968696
EPLAN Doc. No.
ABB Ref. No.
Resp. Dept.
Item Des.
= 01
+ 01.1
Rev.
B
Sheet
051a
Cont.

Frame 2×R8i

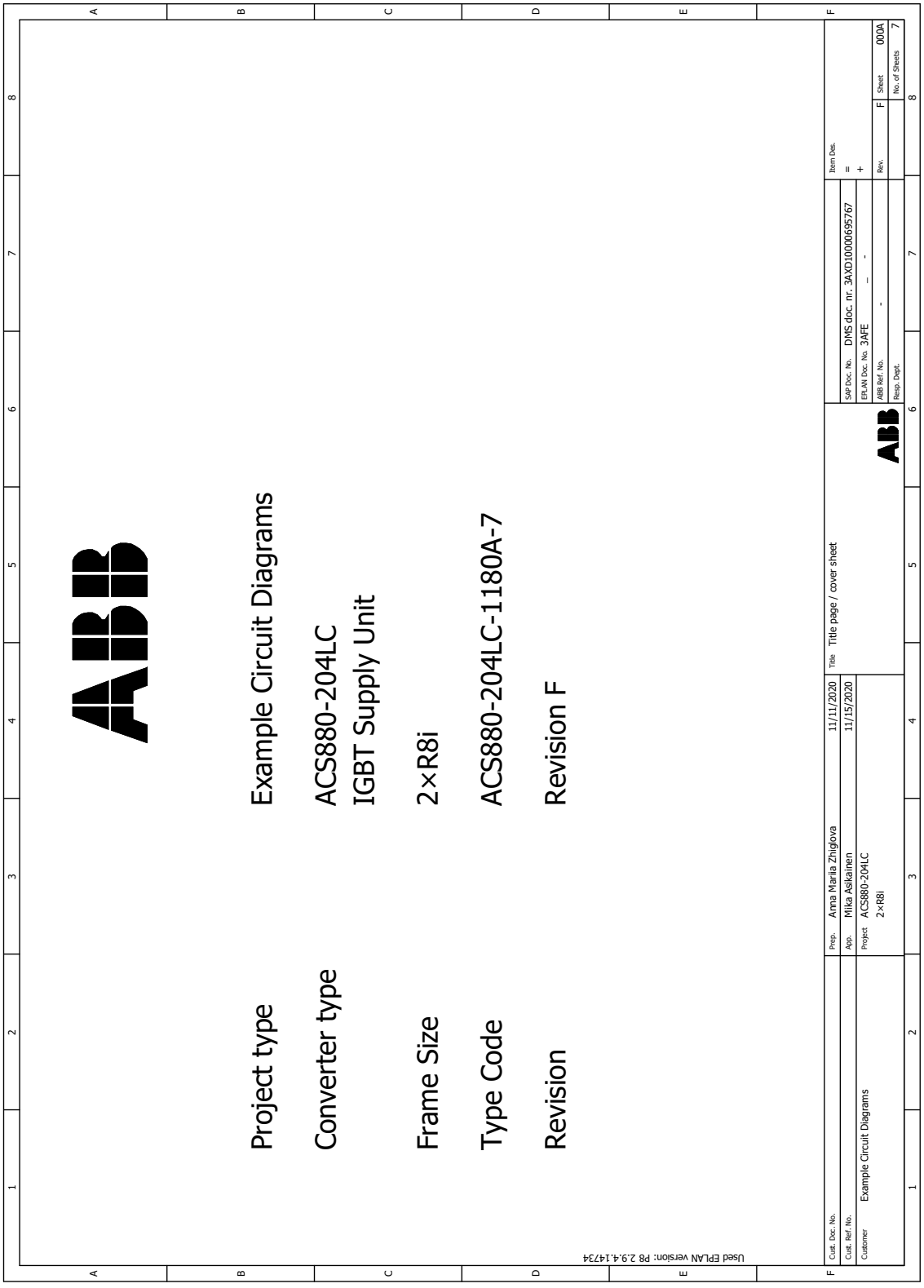
Example Circuit Diagrams
Project type
ACS880-204LC
IGBT Supply Unit
Converter type
2×R8i
Frame Size
ACS880-204LC-1180A-7
Type Code
Revision F
Revision
Used EPLAN version: P8 2.9.4.14734
Prep. Anna Mariia Zhiglova 11/11/2020
Appr. Mika Aslkainen 11/15/2020
Project ACS880-204LC
2×R8i
Title Title page / cover sheet
SAP Doc. No. DMS doc. nr. 3AXD10000695767
EPLAN Doc. No. 3AFE _ -
ABB Ref. No. -
Resp. Dept.
Item Des.
Rev. F
Sheet 001A
No. of Sheets 7
Cust. Doc. No.
Cust. Ref. No.
Customer Example Circuit Diagrams

Higher-level function	Page	Page description	Revision
	000A	Title page / cover sheet	F
	000C	Structured identifier overview	F
	000D	Summarized parts list	F
	000E	Summarized parts list	F
	000F	Summarized parts list	F
	300A	Symbol Overview	F
01	001a	Main supply, Aux. supply switch	F
	001b	Line-up charging circuit	F
	002a	LCL filter	F
	003a	Drive main circuit	F
	004a	BSFC	F
	005a	Drive main circuit	F
	020a	Auxiliary transformer	F
	020b	External fan supply	F
	021a	Auxiliary circuit	F
	022a	24V Distribution	F
	026a	ACU/ICU fan control	F
	026c	LCL fan control	F
	026d	ISU fan control	F
	030a	Air circuit breaker	F
	050a	ISU Control Board	F
	050b	ISU Control Board	F
	050c	ISU Control Board	F
	050d	ISU Control Board	F
	066d	Safety circuit & Supply STO	F

Cust. Doc. No.	Prep. Anna Mariia Zhiglova 11/11/2020	Title Table of contents		Item Des.	
Cust. Ref. No.	App. Mika Asikainen 11/15/2020		SAP Doc. No. DMS doc. nr. 3AXD10000695767	=	
Customer Example Circuit Diagrams	Project ACS880-204LC 2×R8i		EPLAN Doc. No. 3AFE _ -	+	
		ABB	ABB Ref. No. -	Rev. F	Sheet 000B
			Resp. Dept.		No. of Sheets 7

Function designations

Designation	Structure description
=01	IGBT Supply Unit

Location designations

Designation	Structure description
+01.1	Auxiliary Control Cubicle (External)
+01.2	Incoming Cubicle (External)
+01.3	LCL Filter Cubicle
+01.4	IGBT Supply Cubicle

Electrical option designations

Designation	Material Code	Amount
Air Circuit Breaker	3AXD50000048327	1
CM Filter	3AXD50000566785	4
Charging Kit	3AXD50000226801, 3AXD50000250783	2
Control Panel	3AXD50000025965	1
Control Unit Kit	3AXD50000002937	1
Cooling Fan	3AXD50000043886, 3AXD50000050763	3
Fieldbus Adapter	3AUA0000072069	1
Filter Unit Kit	3AXD50000234431	1
Fuse	68689589, 63919462	7
Panel mounting kit	3AUA0000108878	1
Resistor	10028531	6
Supply Module	ACS880-104LC-0670A-7	2
Switch Kit	3AXD50000227044, 3AXD50000507078	2

Cust. Doc. No.	Prep. Anna Mariia Zhiglova 11/11/2020	Title Structured identifier overview		Item Des.	
Cust. Ref. No.	App. Mika Asikainen 11/15/2020		SAP Doc. No. DMS doc. nr. 3AXD10000695767	=	
Customer Example Circuit Diagrams	Project ACS880-204LC 2×R8i		EPLAN Doc. No. 3AFE _ -	+	
		ABB	ABB Ref. No. -	Rev. F	Sheet 000C
			Resp. Dept.		No. of Sheets 7

GENERAL/RELAY COIL, WITH PROTECTIVE CIRCUIT DIODE AND R+LED

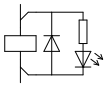

GENERAL/RELAY COIL

COIL WITH PICK-UP DELAY

COIL WITH OFF-DELAY

NO CONTACT

NC CONTACT

CHANGE OVER CONTACT

NO CONTACT, WITH CLOSING DELAY

TWO NO CONTACTS ONE INPUT, TWO OUTPUTS

TWO CONNECTED CHANGE OVER CONTACTS

POWER NO CONTACT OF A CONTACTOR

PUSH BUTTON WITH NO CONTACT

PUSH BUTTON WITH NC CONTACT

NO SWITCH, OPERATED BY TURNING, 2 POSITIONS

LIMIT SWITCH NC CONTACT MECHANICALLY OPERATED

NC SWITCH, TEMPERATURE OPERATED

EMERGENCY STOP PUSH BUTTON

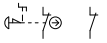

DISCONNECT SWITCH, THREE-POLE

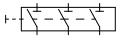

SWITCH DISCONNECTOR WITH FUSES, THREE-POLE

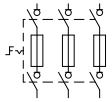

FUSE

FUSE DISCONNECTOR

CIRCUIT BREAKER

MOTOR OVERLOAD SWITCH WITH SWITCH MECHANISM

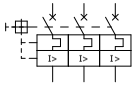

COMMON MODE FILTER FOR HIGH FREQUENCY CURRENTS

PROTECTIVE EARTH CONNECTED TO FRAME

PROTECTIVE EARTH CONNECTED TO TERMINAL / PE BUSBAR

FUNCTIONAL EARTHING CONNECTED TO TERMINAL

FUNCTIONAL BONDING TO FRAME

LIGHT

INDUCTOR

CAPACITOR

RESISTOR

POWER RESISTOR WITH FUSE

PHASE SELECTING SWITCH

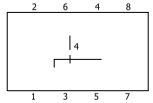

TRANSFORMER

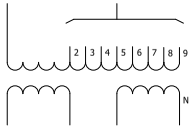

EMC FILTER

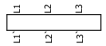

TERMINAL, FOUR POLE

PLUG AND SOCKET TERMINAL BLOCK WITH 4 CONNECTION POINTS

FEMALE AND MALE PLUG

AMPERE METER

CURRENT TRANSFORMER

VOLTAGE METER

WIRE TERMINATION, INSULATED

SHIELDED CABLE

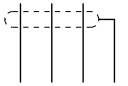

THERMAL OPERATION

DISCONNECT

DISCONNECT, CAN BE OPERATED WHILE NOMINAL CURRENT IS APPLIED

BREAKER, SHORTCIRCUIT BREAKING CAPABILITY

Cust. Doc. No.	Prep. Anna Mariia Zhiglova 11/11/2020	Title Symbol Overview	Item Des.
Cust. Ref. No.	App. Mika Asikainen 11/15/2020		=
Customer Example Circuit Diagrams	Project ACS880-204LC 2×R8i		+
		SAP Doc. No. DMS doc. nr. 3AXD10000695767	
		EPLAN Doc. No. 3AFE _ -	
		ABB Ref. No. -	Rev. F / Sheet 300A
		Resp. Dept.	No. of Sheets 7

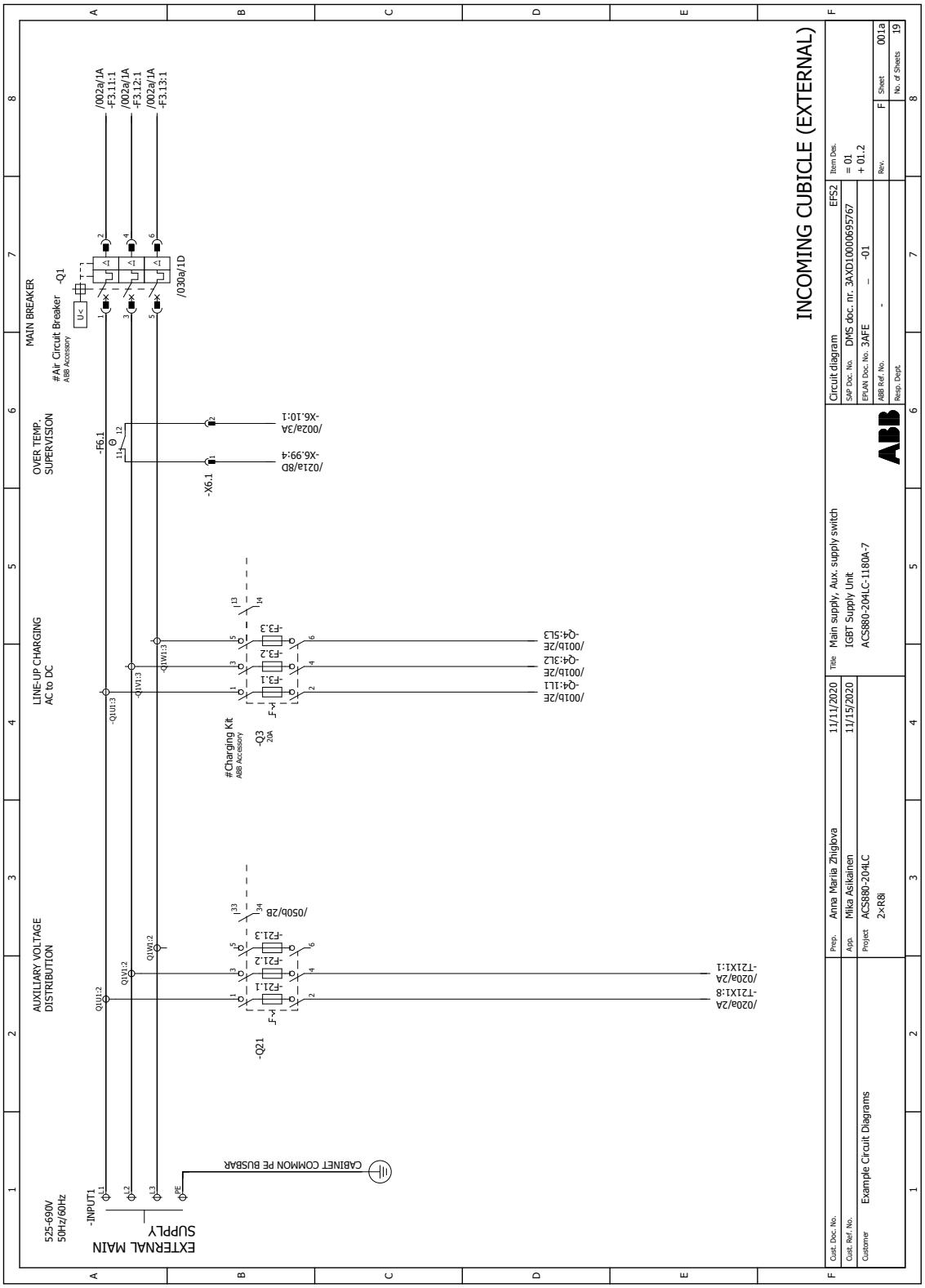
INCOMING CUBICLE (EXTERNAL)
EXTERNAL MAIN SUPPLY
525-690V 50Hz/60Hz
-INPUT1
CABINET COMMON PE BUSBAR
AUXILIARY VOLTAGE DISTRIBUTION
LINE-UP CHARGING AC to DC
OVER TEMP. SUPERVISION
MAIN BREAKER
#Air Circuit Breaker ABB Accessory
-Q1
-Q21
-Q3 20A
#Charging Kit ABB Accessory
-F6.1
-X6.1
Main supply, Aux. supply switch
IGBT Supply Unit
ACS880-204LC-1180A-7
Circuit diagram
EFS2
DMS doc. nr. 3AXD10000695767
3AFE – -01
Item Des. = 01 + 01.2
Sheet 001a
No. of Sheets 19
Prep. Anna Mariia Zhigiova 11/11/2020
Appr. Mika Asikainen 11/15/2020
Project ACS880-204LC 2×R8i
Customer Example Circuit Diagrams

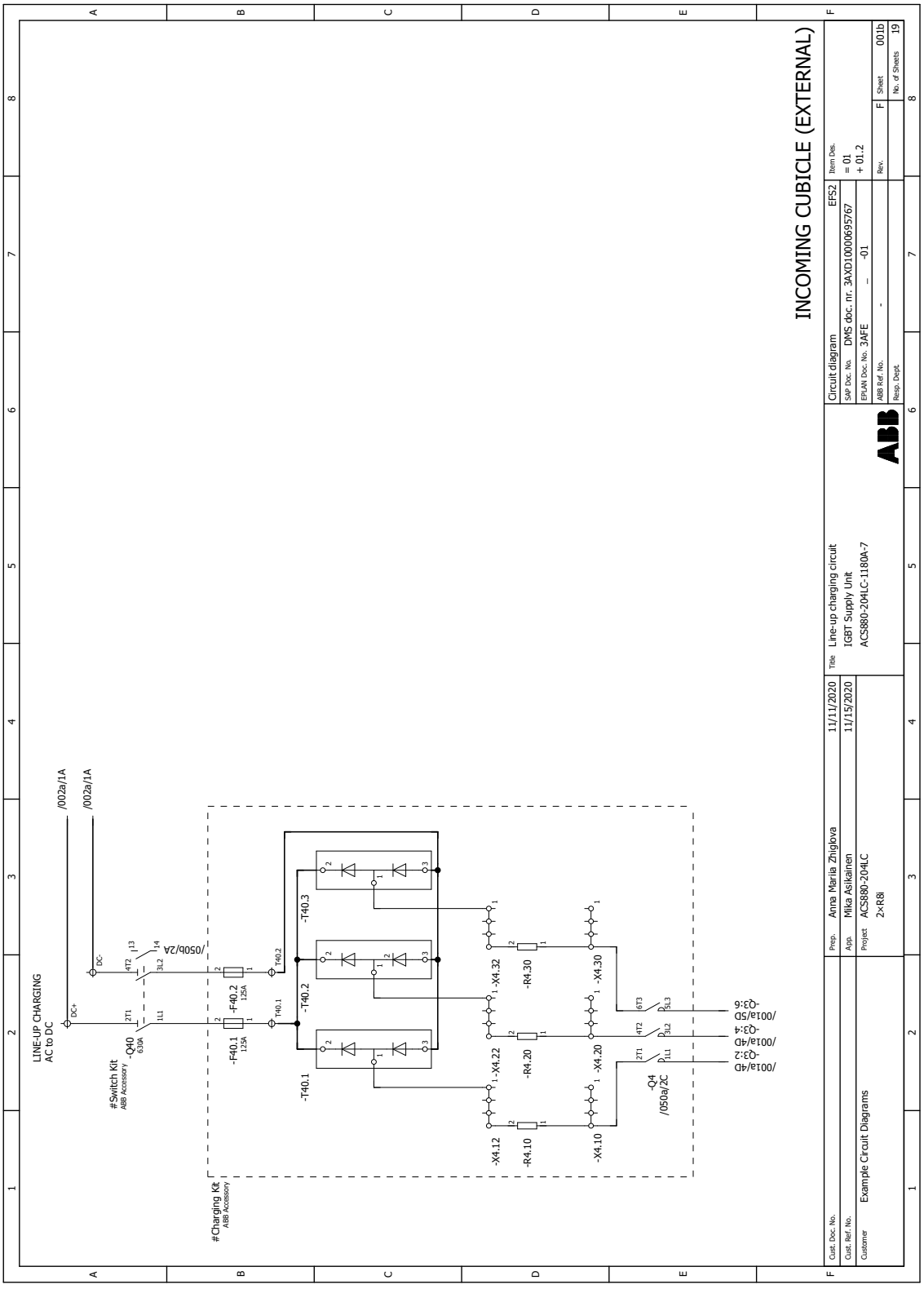
INCOMING CUBICLE (EXTERNAL)
LINE-UP CHARGING
AC to DC
/002a/1A
/002a/1A
DC+
DC-
-Q40
630A
#Switch Kit
ABB Accessory
/050b/2A
-F40.1
125A
-F40.2
125A
-T40.1
-T40.2
-T40.3
-T40.2
#Charging Kit
ABB Accessory
-X4.12
-R4.10
-X4.22
-R4.20
-X4.32
-R4.30
-X4.10
-X4.20
-X4.30
-Q4
/050a/2C
/001a/4D
-Q3:2
/001a/4D
-Q3:4
/001a/5D
-Q3:6
Circuit diagram
EFS2
SAP Doc. No.
DMS doc. nr. 3AXD10000695767
EPLAN Doc. No. 3AFE – -01
ABB Ref. No. - Rev. F Sheet 001b
Resp. Dept. No. of Sheets 19
Item Des.
= 01
+ 01.2
Cust. Doc. No.
Cust. Ref. No.
Customer Example Circuit Diagrams
Prep. Anna Mariia Zhiglova 11/11/2020
Appr. Mika Asikainen 11/15/2020
Project ACS880-204LC 2×R8i
Title Line-up charging circuit IGBT Supply Unit ACS880-204LC-1180A-7

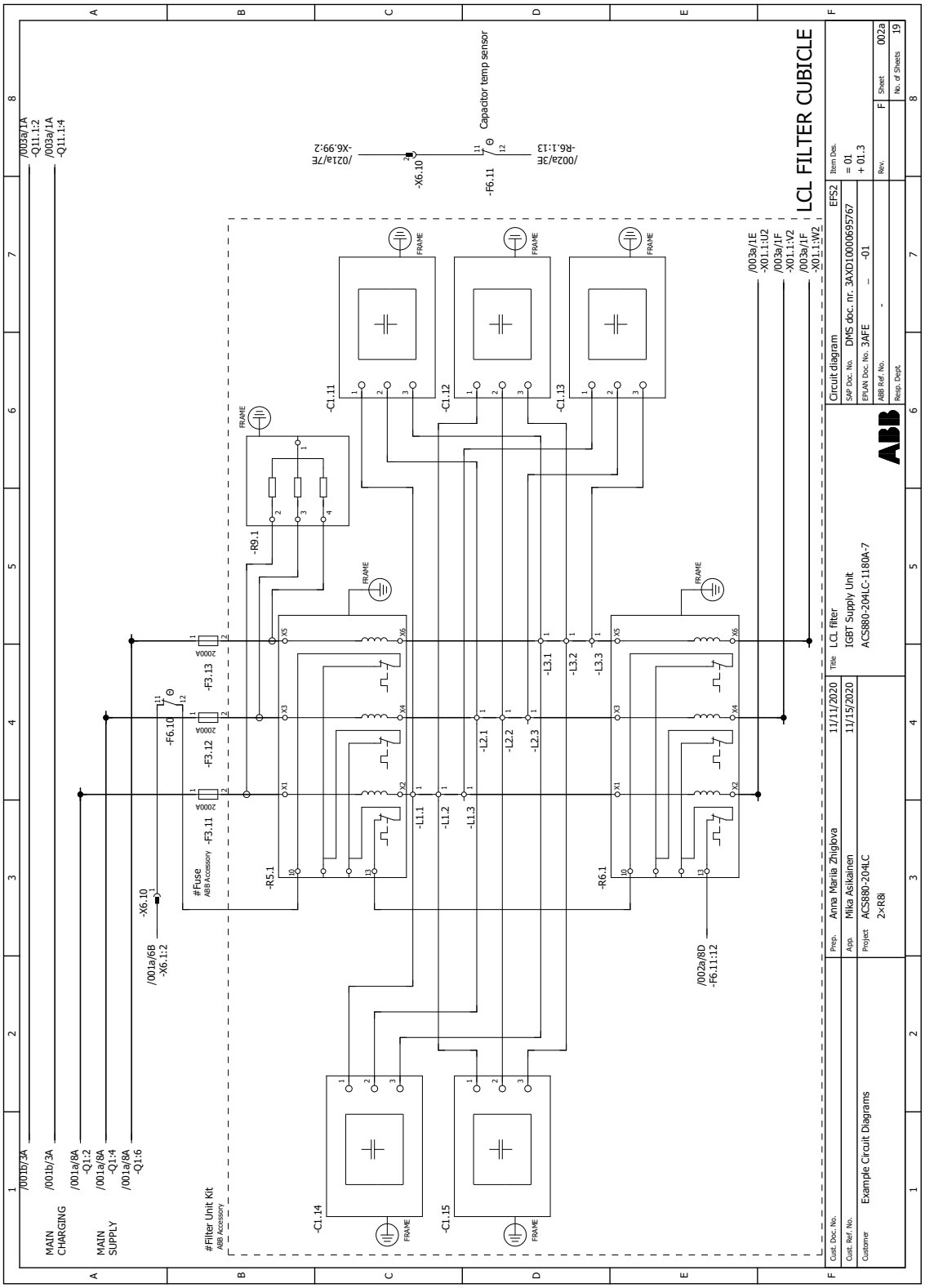
LCL FILTER CUBICLE
Capacitor temp sensor
-X6.10
-F6.11
-R6.1:13
/002a/3E
/021a/7E
-X6.99:2
/003a/1A
-Q11.1:2
/003a/1A
-Q11.1:4
/001b/3A
/001b/3A
MAIN CHARGING
/001a/8A
-Q1:2
/001a/8A
-Q1:4
/001a/8A
-Q1:6
MAIN SUPPLY
#Filter Unit Kit
ABB Accessory
/001a/6B
-X6.1:2
-X6.10
#Fuse
ABB Accessory
-F3.11
-F3.12
-F6.10
-F3.13
2000A
-R5.1
-R6.1
-R9.1
-C1.11
-C1.12
-C1.13
-C1.14
-C1.15
FRAME
-L1.1
-L1.2
-L1.3
-L2.1
-L2.2
-L2.3
-L3.1
-L3.2
-L3.3
/003a/1E
-X01.1:U2
/003a/1F
-X01.1:V2
/003a/1F
-X01.1:W2
/002a/8D
-F6.1:12
Circuit diagram
EFS2
SAP Doc. No.
DMS doc. nr. 3AXD10000695767
EPLAN Doc. No. 3AFE _ -01
ABB Ref. No. -
Resp. Dept.
Item Des.
= 01
+ 01.3
Rev.
F
Sheet 002a
No. of Sheets 19
Title LCL filter
IGBT Supply Unit
ACS880-204LC-1180A-7
Prep. Anna Mariia Zhigiova 11/11/2020
Appr. Mika Asikainen 11/15/2020
Project ACS880-204LC
2×R8i
Cust. Doc. No.
Cust. Ref. No.
Customer Example Circuit Diagrams

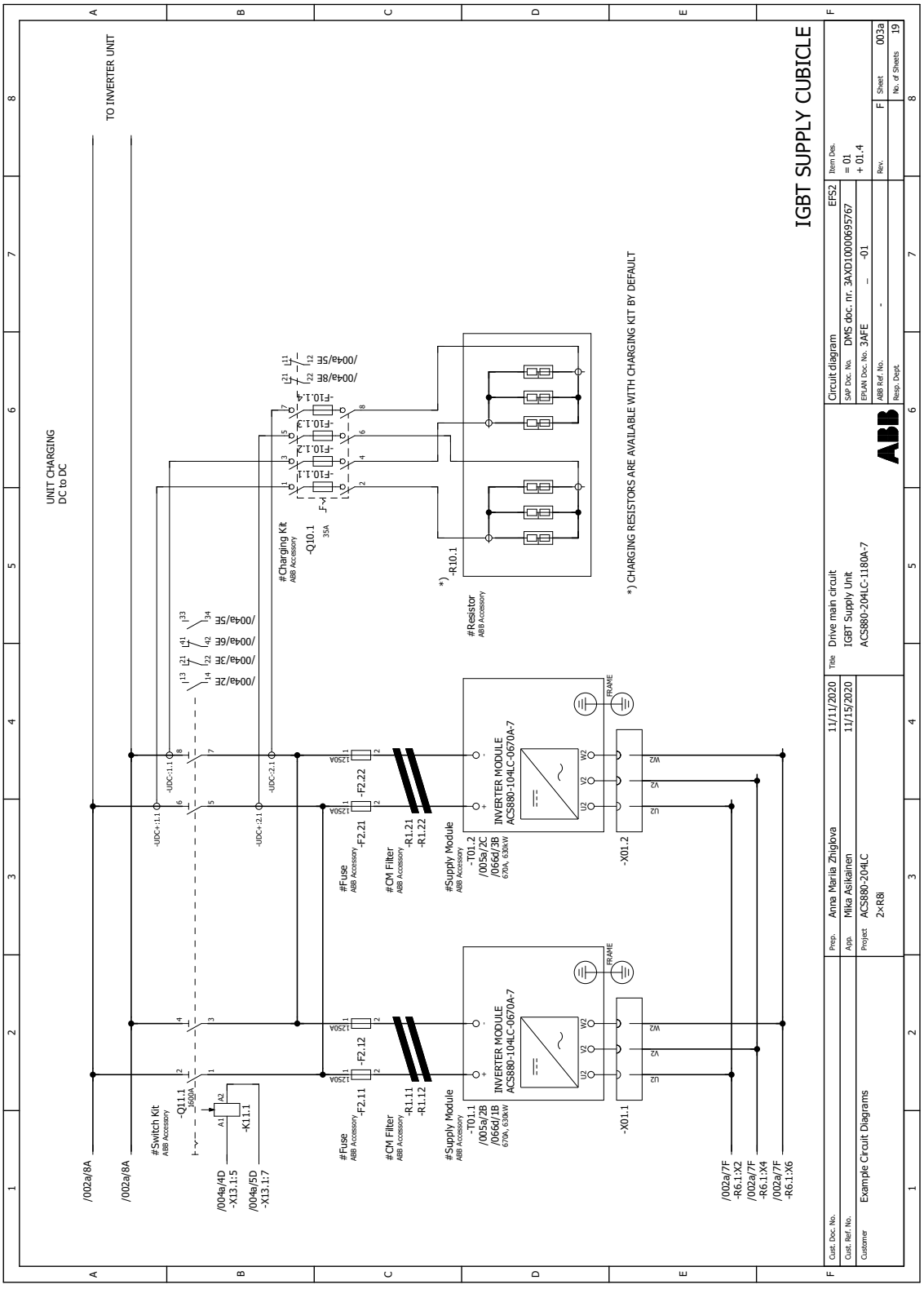
IGBT SUPPLY CUBICLE
TO INVERTER UNIT
UNIT CHARGING
DC to DC
*) CHARGING RESISTORS ARE AVAILABLE WITH CHARGING KIT BY DEFAULT
#Switch Kit
ABB Accessory
-Q11.1
1600A
-K11.1
#Charging Kit
ABB Accessory
-Q10.1
35A
-F10.1.1
-F10.1.2
-F10.1.3
-F10.1.4
*) -R10.1
#Resistor
ABB Accessory
#Fuse
ABB Accessory
-F2.11
-F2.12
-F2.21
-F2.22
#CM Filter
ABB Accessory
-R1.11
-R1.12
-R1.21
-R1.22
#Supply Module
ABB Accessory
-T01.1
/005a/2B
/066d/1B
670A, 630kW
-T01.2
/005a/2C
/066d/3B
INVERTER MODULE
ACS880-104LC-0670A-7
FRAME
-X01.1
-X01.2
-UDC+:1.1
-UDC-:1.1
-UDC+:2.1
-UDC-:2.1
/004a/8E
/004a/5E
/004a/7E
/004a/6E
/004a/3E
/004a/2E
/002a/8A
/004a/4D
-X13.1:5
/004a/5D
-X13.1:7
/002a/7F
-R6.1:X2
-R6.1:X4
-R6.1:X6
Circuit diagram
EFS2
SAP Doc. No.
DMS doc. nr. 3AXD10000695767
EPLAN Doc. No. 3AFE – -01
ABB Ref. No. - Rev. F
Resp. Dept.
Item Des.
= 01
+ 01.4
Sheet 003a
No. of Sheets 19
Cust. Doc. No.
Cust. Ref. No.
Customer Example Circuit Diagrams
Prep. Anna Mariia Zhiglova 11/11/2020
Appr. Mika Asikainen 11/15/2020
Project ACS880-204LC 2×R8i
Title Drive main circuit
IGBT Supply Unit
ACS880-204LC-1180A-7

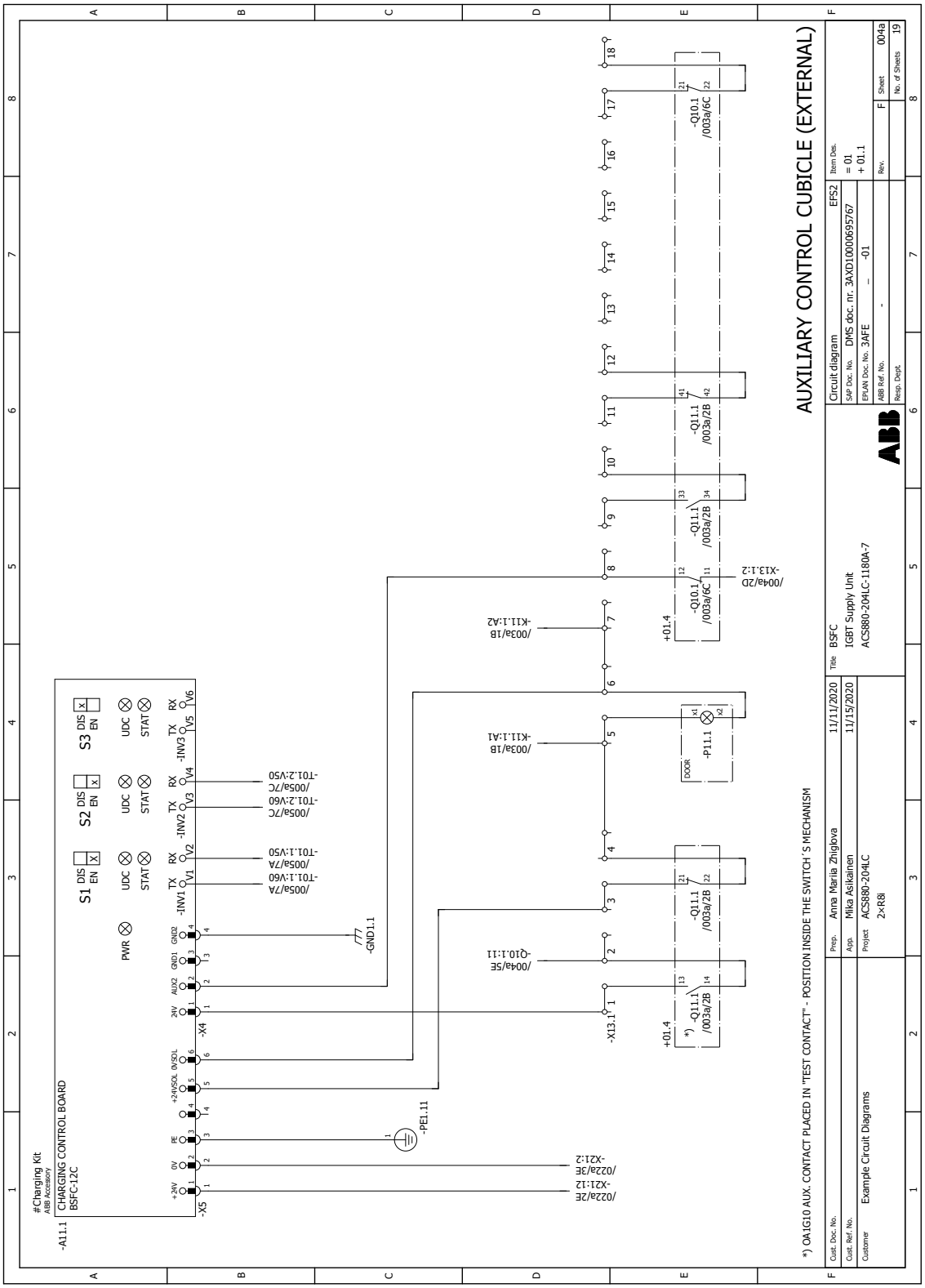
AUXILIARY CONTROL CUBICLE (EXTERNAL)
*) OA1G10 AUX. CONTACT PLACED IN "TEST CONTACT" - POSITION INSIDE THE SWITCH´S MECHANISM
Circuit diagram
Title BSFC
IGBT Supply Unit
ACS880-204LC-1180A-7
Prep. Anna Mariia Zhiglova 11/11/2020
App. Mika Asikainen 11/15/2020
Project ACS880-204LC
2×R8i
Customer Example Circuit Diagrams
Sheet 004a
No. of Sheets 19
#Charging Kit
ABB Accessory
CHARGING CONTROL BOARD
BSFC-12C
-A11.1
-X5
-X4
-INV1
-INV2
-INV3
-GND1.1
-PE1.11
-X13.1
-Q10.1
/003a/6C
-Q11.1
/003a/2B
-Q10.1
/003a/6C
-Q11.1
/003a/2B
-Q11.1
/003a/2B
-Q11.1
/003a/2B
-Q11.1
/003a/2B
-P11.1
DOOR
+01.4
+01.4
-Q10.1:11
-K11.1:A1
-K11.1:A2
-X13.1:2
/004a/2D
/004a/5E
/003a/1B
/003a/1B
-T01.1:V50
-T01.1:V60
-T01.2:V50
-T01.2:V60
/005a/7A
/005a/7A
/005a/7C
/005a/7C
-X21:12
-X21:2
/022a/2E
/022a/3E
PWR
S1
S2
S3
DIS
EN
UDC
STAT
TX
RX
V1
V2
V3
V4
V5
V6
24V
AUX2
GND1
GND2
0V
PE
+24VSOL
0VSOL
+24V
0V

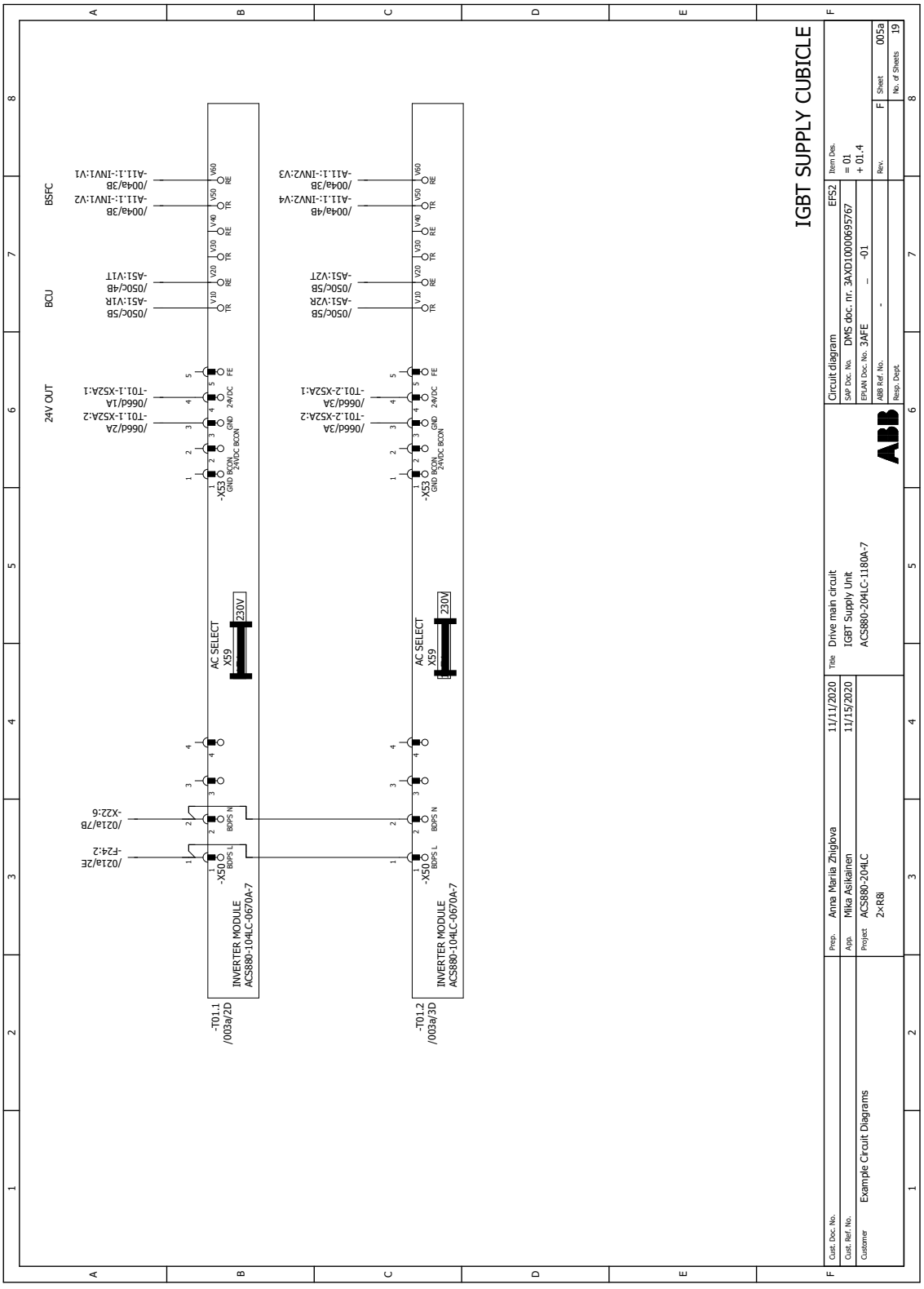
IGBT SUPPLY CUBICLE
Circuit diagram
EFS2
Item Des.
= 01
+ 01.4
SAP Doc. No. DMS doc. nr. 3AXD10000695767
EPLAN Doc. No. 3AFE _ -01
ABB Ref. No. -
Resp. Dept.
Rev. F
Sheet 005a
No. of Sheets 19
Title Drive main circuit
IGBT Supply Unit
ACS880-204LC-1180A-7
Prep. Anna Maria Zhiglova 11/11/2020
App. Mika Asikainen 11/15/2020
Project ACS880-204LC
2×R8i
Cust. Doc. No.
Cust. Ref. No.
Customer Example Circuit Diagrams
BSFC
BCU
24V OUT
AC SELECT
X59
230V
INVERTER MODULE
ACS880-104LC-0670A-7
-T01.1
/003a/2D
-T01.2
/003a/3D
-X53
-X50
-X22:6
/021a/7B
-F24:2
/021a/2E
-A11.1:-INV1:V1
/004a/3B
-A11.1:-INV1:V2
-A51:V1T
/050c/5B
-A51:V1R
/050c/4B
-T01.1-X52A:1
/066d/1A
-T01.1-X52A:2
/066d/2A
-A11.1:-INV2:V3
/004a/3B
-A11.1:-INV2:V4
/004a/4B
-A51:V2T
/050c/5B
-A51:V2R
/050c/5B
-T01.2-X52A:1
/066d/3A
-T01.2-X52A:2
/066d/3A
24VDC
GND
BCON
BDPS L
BDPS N
TR
RE
V10
V20
V30
V40
V50
V60

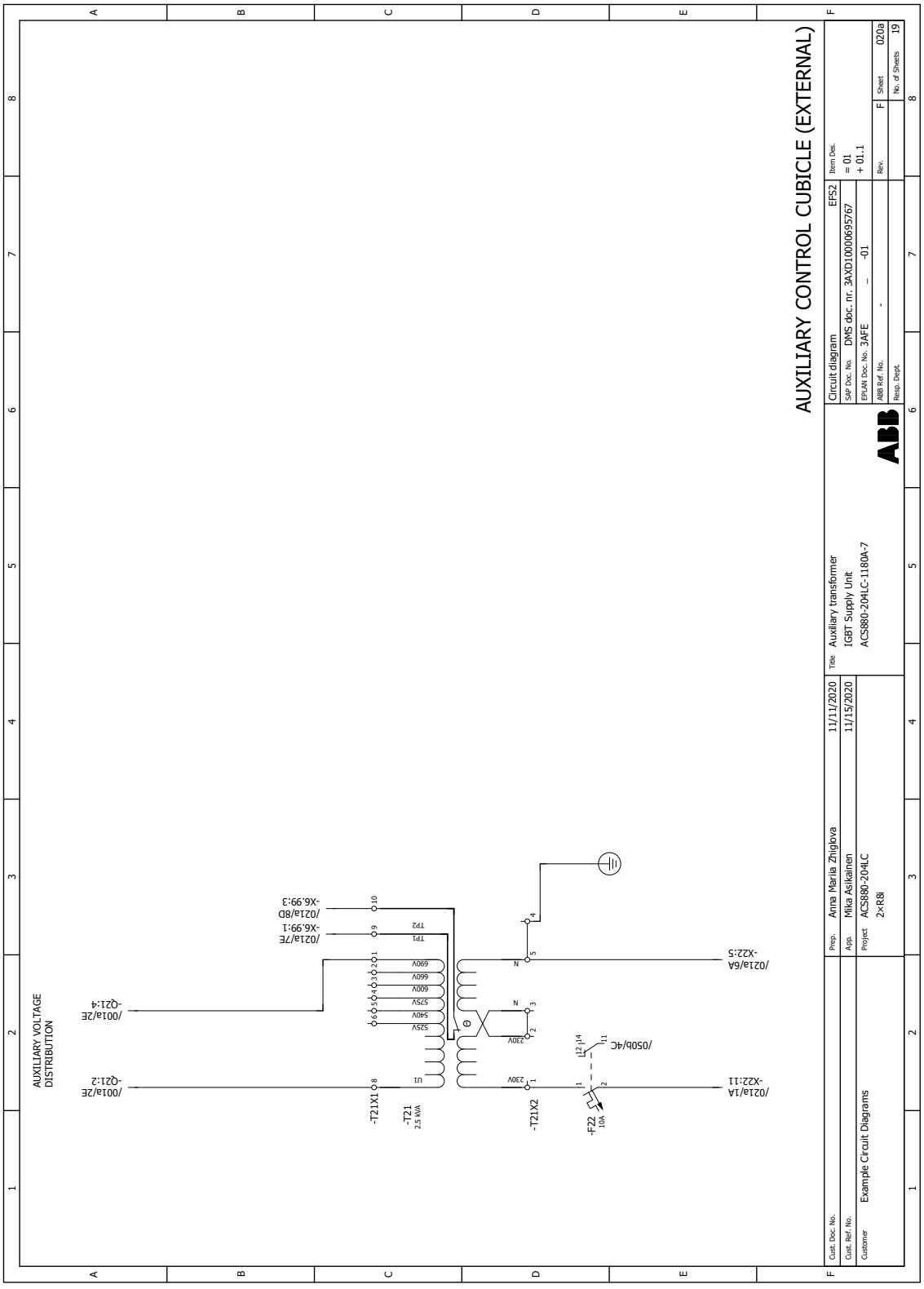
AUXILIARY CONTROL CUBICLE (EXTERNAL)
AUXILIARY VOLTAGE DISTRIBUTION
/001a/2E -Q21:4
/001a/2E -Q21:2
/021a/8D -X6.99:3
/021a/7E -X6.99:1
/021a/6A -X22:5
/021a/1A -X22:11
/050b/4C
-T21X1
-T21
2.5 kVA
-T21X2
-F22
10A
Prep. Anna Mariia Zhiglova 11/11/2020
App. Mika Asikainen 11/15/2020
Project ACS880-204LC 2×R8i
Title Auxiliary transformer IGBT Supply Unit ACS880-204LC-1180A-7
Circuit diagram EFS2
SAP Doc. No. DMS doc. nr. 3AXD10000695767
EPLAN Doc. No. 3AFE _ -01
ABB Ref. No. -
Resp. Dept.
Item Des. = 01 + 01.1
Rev. F
Sheet 020a
No. of Sheets 19
Cust. Doc. No.
Cust. Ref. No.
Customer Example Circuit Diagrams

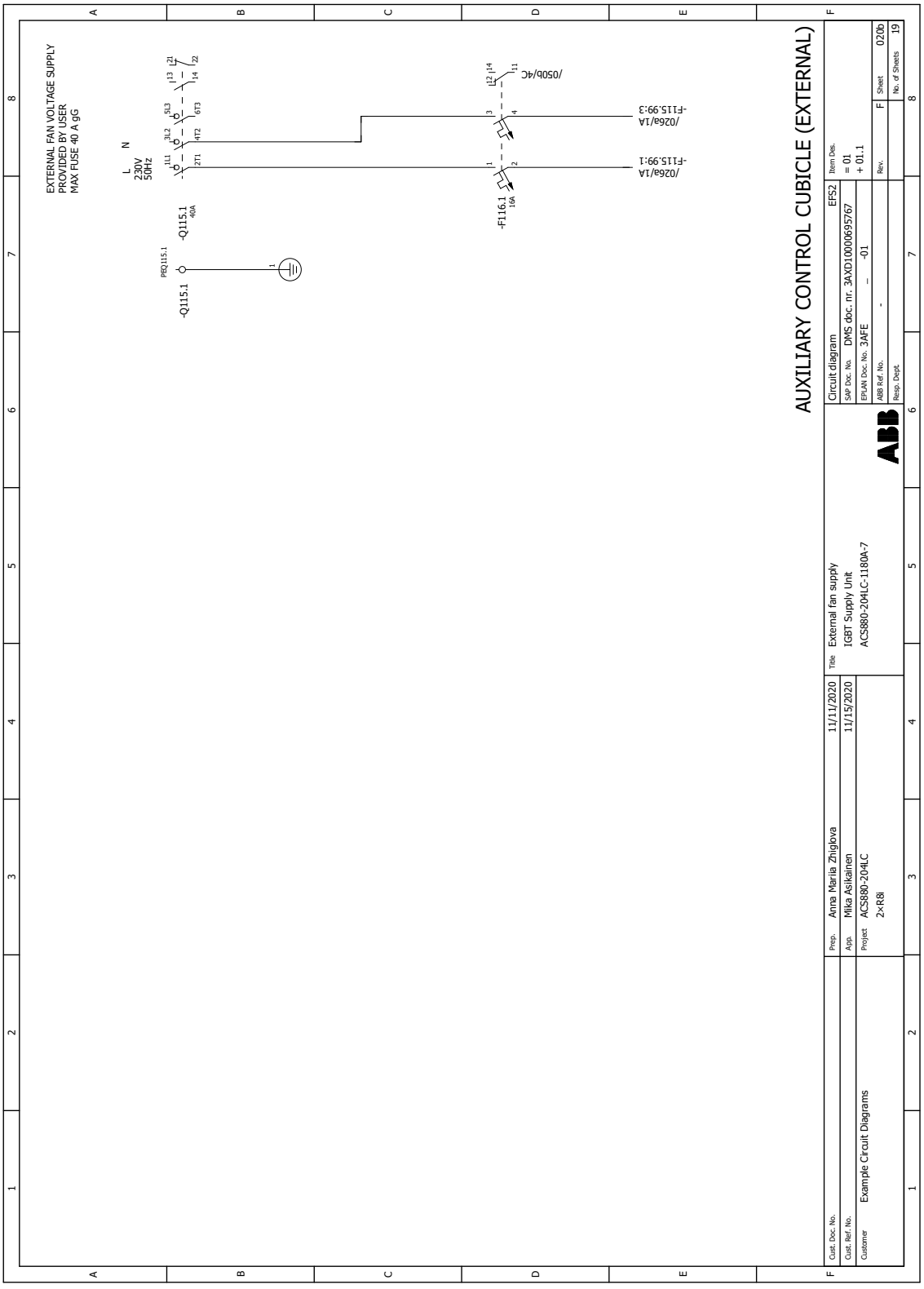
AUXILIARY CONTROL CUBICLE (EXTERNAL)
EXTERNAL FAN VOLTAGE SUPPLY
PROVIDED BY USER
MAX FUSE 40 A gG
L N
230V
50HZ
-Q115.1
40A
-Q115.1
-F116.1
16A
/050b/4C
/076a/1A
-F115.99:3
/076a/1A
-F115.99:1
Cust. Doc. No.
Cust. Ref. No.
Customer
Example Circuit Diagrams
Prep.
Anna Mariia Zhiglova
11/11/2020
Appr.
Mika Asikainen
11/15/2020
Project
ACS880-204LC
2×R8i
Title
External fan supply
IGBT Supply Unit
ACS880-204LC-1180A-7
Circuit diagram
EFS2
SAP Doc. No.
DMS doc. nr. 3AXD10000695767
EPLAN Doc. No.
3AFE
-01
ABB Ref. No.
-
Resp. Dept.
Item Des.
= 01
+ 01.1
Rev.
F
Sheet
020b
No. of Sheets
19

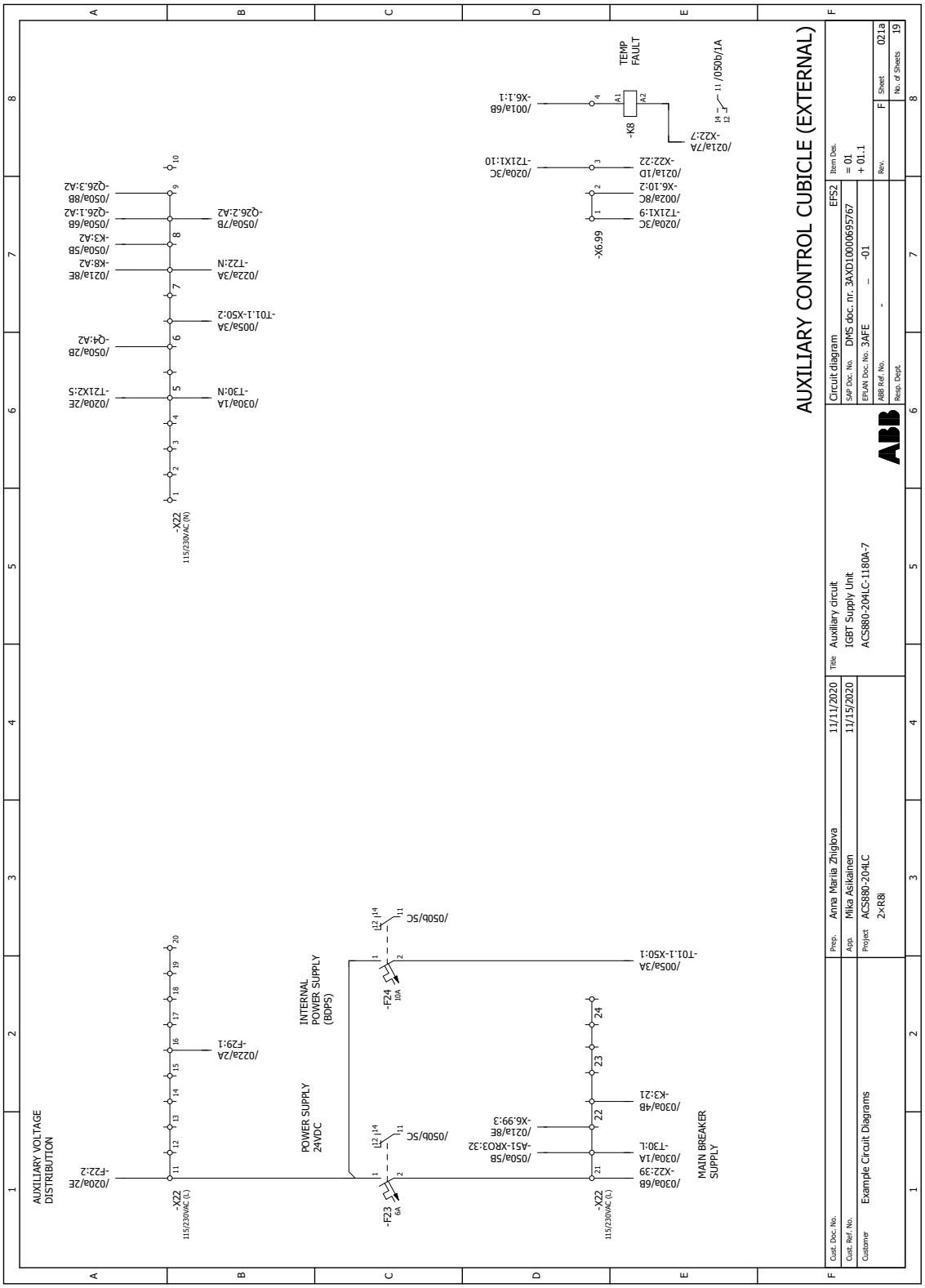
AUXILIARY CONTROL CUBICLE (EXTERNAL)
Circuit diagram
EFS2
SAP Doc. No. DMS doc. nr. 3AXD10000695767
EPLAN Doc. No. 3AFE _ -01
ABB Ref. No. -
Resp. Dept.
Item Des.
= 01
+ 01.1
Rev.
F
Sheet 021a
No. of Sheets 19
Title Auxiliary circuit
IGBT Supply Unit
ACS880-204LC-1180A-7
Prep. Anna Mariia Zhiglova 11/11/2020
App. Mika Asikainen 11/15/2020
Project ACS880-204LC
2×R8i
Cust. Doc. No.
Cust. Ref. No.
Customer Example Circuit Diagrams
AUXILIARY VOLTAGE DISTRIBUTION
POWER SUPPLY 24VDC
INTERNAL POWER SUPPLY (BDPS)
MAIN BREAKER SUPPLY
TEMP FAULT
-X22
115/230VAC (L)
-X22
115/230VAC (N)
-F23
6A
-F24
10A
-K8
-X6.99
/050b/5C
/050b/5C
/005a/3A
-T01.1-X50:1
/030a/6B
-X22:39
/030a/1A
-T30:L
/030a/4B
-K3:21
/050a/5B
-AS1-XRO3:32
/021a/8E
-X6.99:3
/020a/2E
-F22:2
/022a/2A
-F29:1
/020a/3C
-T21X1:10
/021a/1D
-X22:22
/020a/3C
-T21X1:9
/002a/8C
-X6.10:2
/021a/7A
-X22:7
/001a/6B
-X6.1:1
/050a/7B
-Q26.2:A2
/050a/6B
-Q26.1:A2
/050a/8B
-Q26.3:A2
/050a/5B
-K3:A2
/050a/6B
-K8:A2
/021a/8E
-T22:N
/022a/3A
/005a/3A
-T01.1-X50:2
/050a/2B
-Q4:A2
/020a/2E
-T21X2:5
/030a/1A
-T30:N
/050a/5B
-AS1-XRO3:32
/021a/8E
-X6.99:3
/030a/4B
-K3:21
/050a/6B
-X22:39
/030a/1A
-T30:L
/050a/5B
-Q26.3:A2
/050a/6B
-Q26.1:A2
/050a/7B
-Q26.2:A2
/050a/8B
-Q26.3:A2
/050a/5B
-K3:A2
/050a/6B
-K8:A2
/021a/8E
-T22:N
/022a/3A
/005a/3A
-T01.1-X50:2
/050a/2B
-Q4:A2
/020a/2E
-T21X2:5
/030a/1A
-T30:N
/020a/3C
-T21X1:10
/021a/1D
-X22:22
/020a/3C
-T21X1:9
/002a/8C
-X6.10:2
/021a/7A
-X22:7
/001a/6B
-X6.1:1
/050b/1A

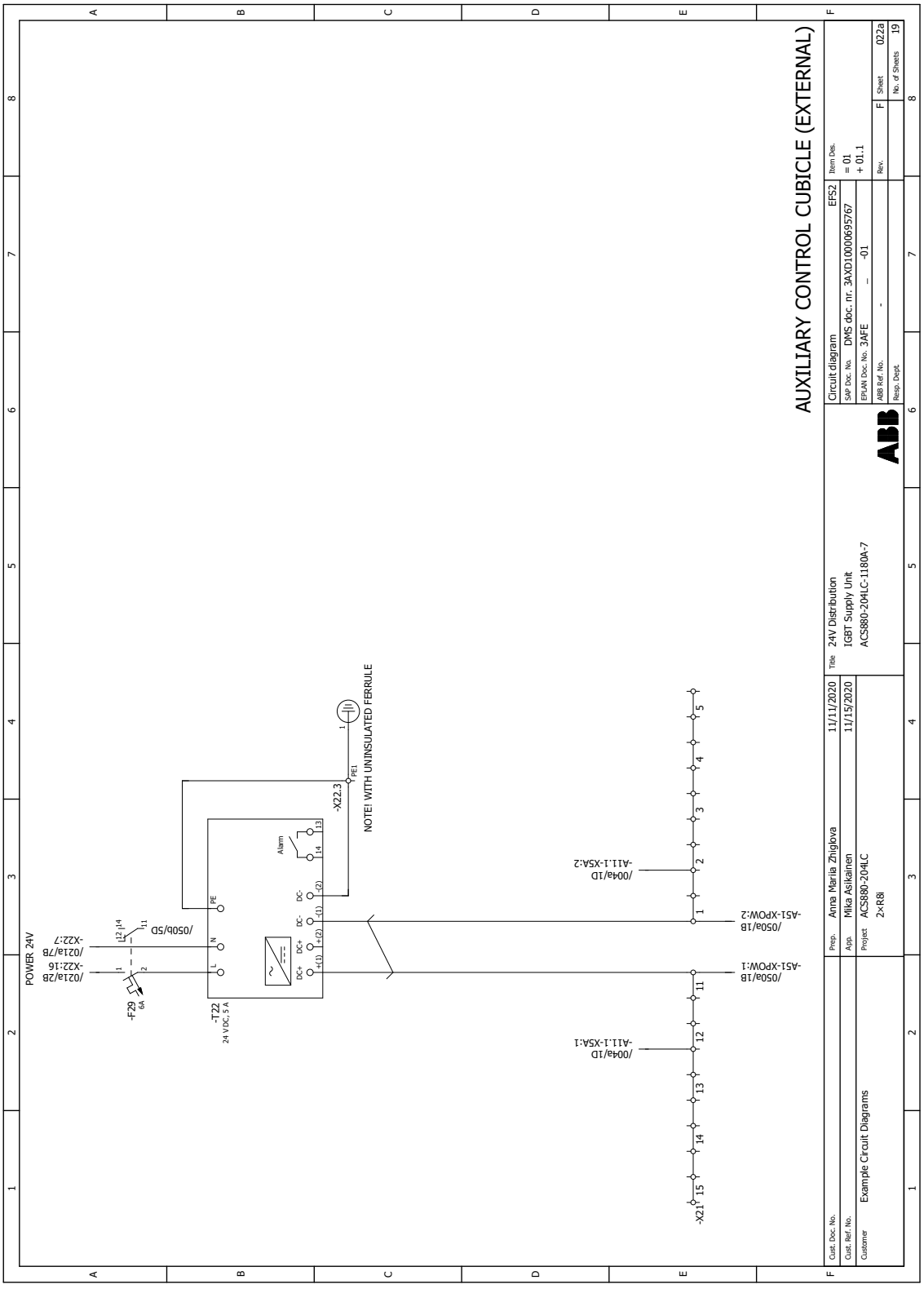
AUXILIARY CONTROL CUBICLE (EXTERNAL)
POWER 24V
-F29
6A
-T22
24 V DC, 5 A
-X22.3
NOTE! WITH UNINSULATED FERRULE
Alarm
-X21
-A51-XPOW:1
-A51-XPOW:2
-A11.1-X5A:1
-A11.1-X5A:2
Circuit diagram
EFS2
SAP Doc. No.
DMS doc. nr. 3AXD10000695767
EPLAN Doc. No. 3AFE – -01
ABB Ref. No. - – -
Resp. Dept.
Item Des.
= 01
+ 01.1
Rev.
Sheet 022a
No. of Sheets 19
Title 24V Distribution
IGBT Supply Unit
ACS880-204LC-1180A-7
Prep. Anna Mariia Zhiglova 11/11/2020
Appr. Mika Asikainen 11/15/2020
Project ACS880-204LC
2×R8i
Cust. Doc. No.
Cust. Ref. No.
Customer Example Circuit Diagrams

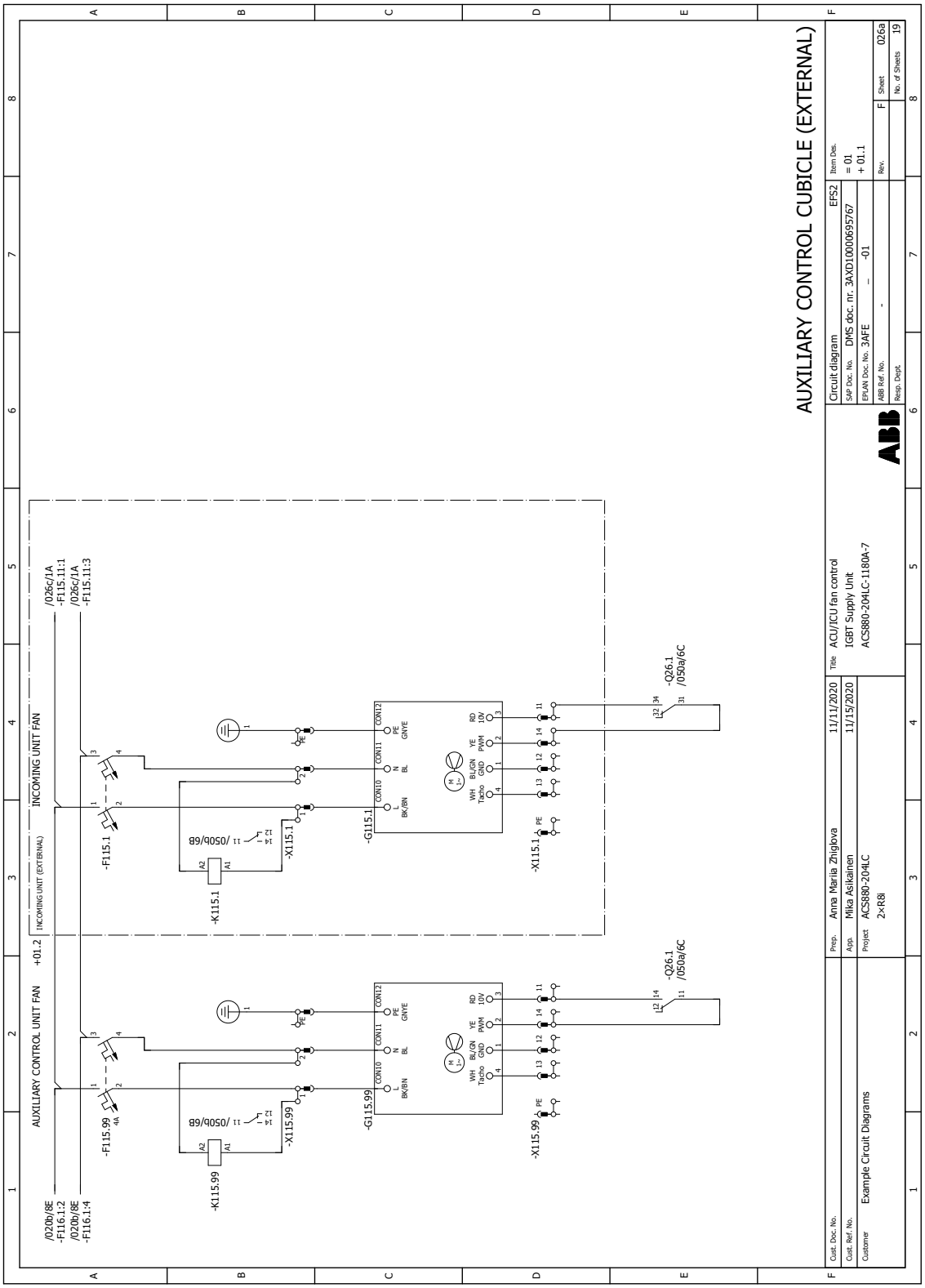
AUXILIARY CONTROL CUBICLE (EXTERNAL)
AUXILIARY CONTROL UNIT FAN
INCOMING UNIT FAN
INCOMING UNIT (EXTERNAL)
+01.2
-F115.99
-K115.99
-X115.99
-G115.99
-Q26.1
-F115.1
-K115.1
-X115.1
-G115.1
-Q26.1
ACU/ICU fan control
IGBT Supply Unit
ACS880-204LC-1180A-7
ACS880-204LC
Example Circuit Diagrams
Anna Mariia Zhigova
Mika Asikainen
11/11/2020
11/15/2020
EFS2
DMS doc. nr. 3AXD10000695767
3AFE -01
026a
19

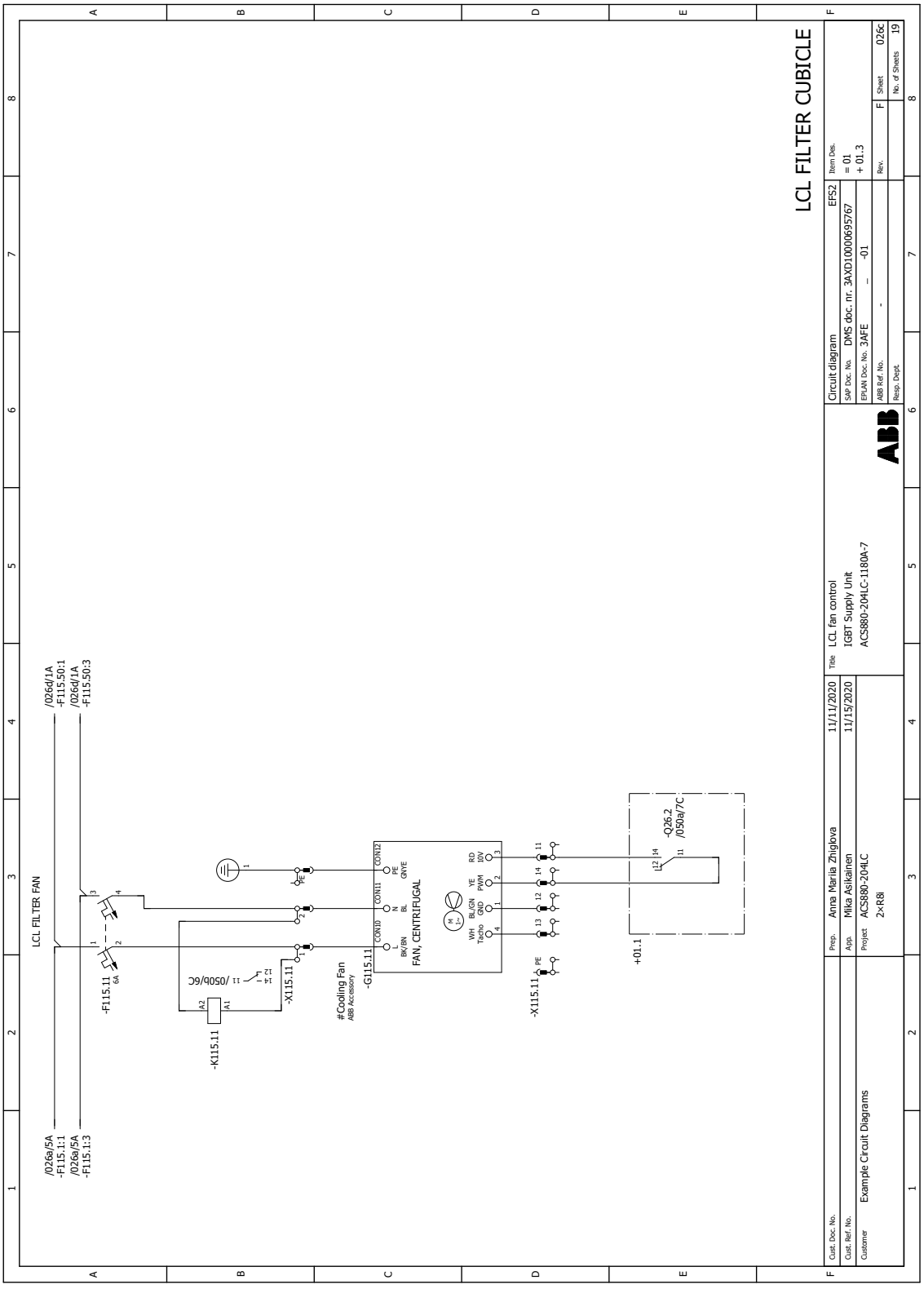
LCL FILTER CUBICLE
LCL FILTER FAN
/026d/1A
-F115.50:1
/026d/1A
-F115.50:3
/026e/5A
-F115.1:1
/026e/5A
-F115.1:3
-F115.11
6A
-K115.11
/050b/6C
-X115.11
#Cooling Fan
ABB Accessory
-G115.11
CON10
CON11
CON12
L
BK/BN
N
BL
PE
GNYE
FAN, CENTRIFUGAL
WH
TACHO
BL/GN
GND
VIE
PWM
RD
10V
-X115.11
PE
+01.1
-Q26.2
/050a/7C
Prep. Anna Mariia Zhiglova 11/11/2020
Appr. Mika Asikainen 11/15/2020
Project ACS880-204LC 2×R8i
Cust. Doc. No.
Cust. Ref. No.
Customer Example Circuit Diagrams
Title LCL fan control
IGBT Supply Unit
ACS880-204LC-1180A-7
Circuit diagram EF52
SAP Doc. No. DMS doc. nr. 3AXD10000695767
EPLAN Doc. No. 3AFE – -01
ABB Ref. No. - Rev. F
Resp. Dept.
Item Des.
= 01
+ 01.3
Sheet 026c
No. of Sheets 19

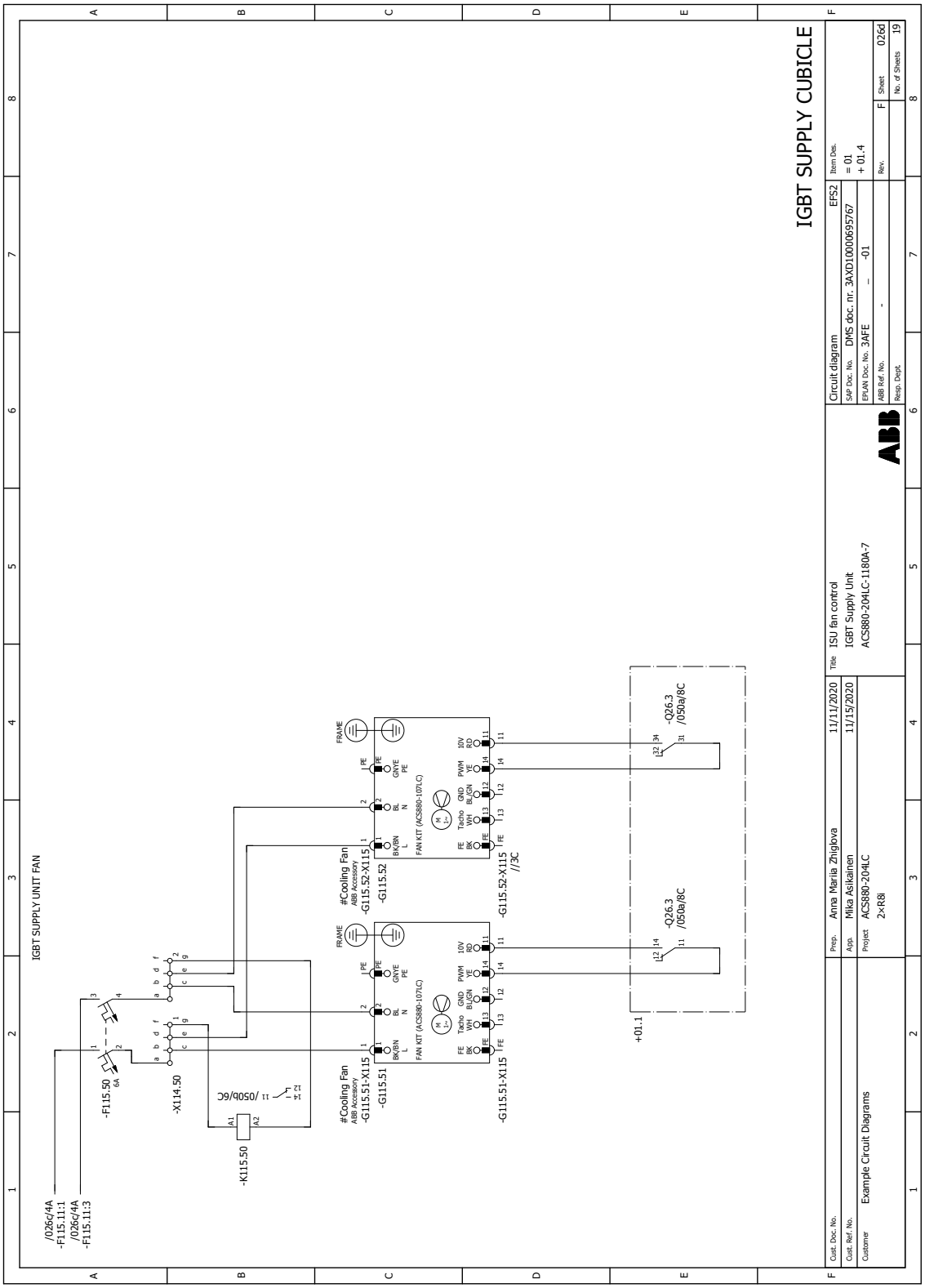
IGBT SUPPLY CUBICLE
IGBT SUPPLY UNIT FAN
/026c/4A
-F115.11:1
/026d/4A
-F115.11:3
-F115.50
6A
-X114.50
-K115.50
/050b/6C
#Cooling Fan
ABB Accessory
-G115.51-X115
-G115.51
-G115.51-X115
#Cooling Fan
ABB Accessory
-G115.52-X115
-G115.52
-G115.52-X115
//3C
-Q26.3
/050a/8C
-Q26.3
/050a/8C
+01.1
FAN KIT (ACS880-107LC)
FAN KIT (ACS880-107LC)
FRAME
FRAME
Prep. Anna Mariia Zhigova 11/11/2020
Appr. Mika Asikainen 11/15/2020
Project ACS880-204LC
2×R8i
Customer Example Circuit Diagrams
Title ISU fan control
IGBT Supply Unit
ACS880-204LC-1180A-7
Circuit diagram
SAP Doc. No. DMS doc. nr. 3AXD10000695767
EPLAN Doc. No. 3AFE – -01
ABB Ref. No. -
Resp. Dept.
EFS2
Item Des.
= 01
+ 01.4
Rev. F
Sheet 026d
No. of Sheets 19

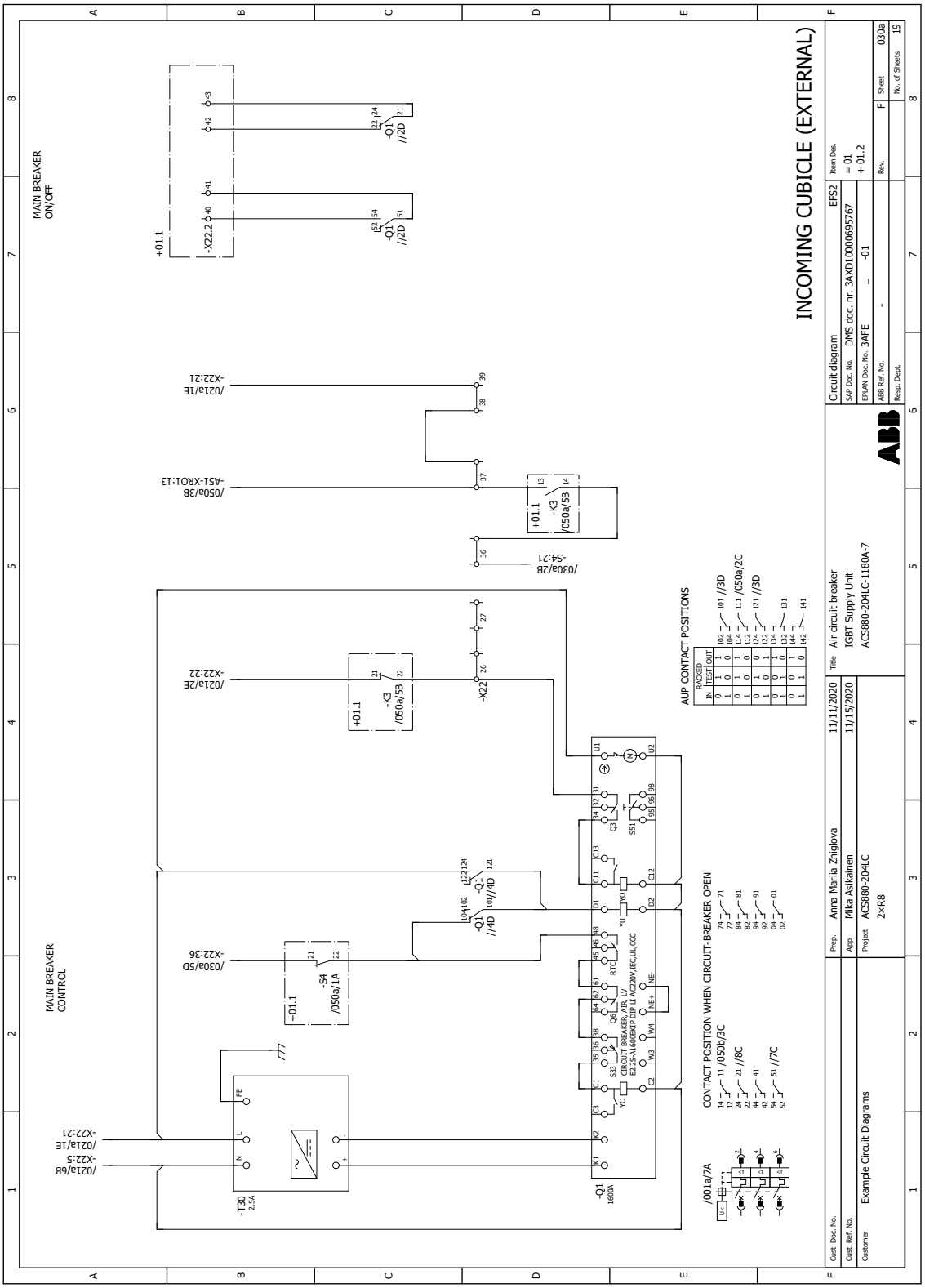
INCOMING CUBICLE (EXTERNAL)
MAIN BREAKER ON/OFF
MAIN BREAKER CONTROL
AUP CONTACT POSITIONS
CONTACT POSITION WHEN CIRCUIT-BREAKER OPEN
Circuit diagram
EFS2
DMS doc. nr. 3AXD10000695767
3AFE
-01
Air circuit breaker
IGBT Supply Unit
ACS880-204LC-1180A-7
Prep. Anna Maria Zhiglova 11/11/2020
App. Mika Asikainen 11/15/2020
Project ACS880-204LC
2×R8i
Customer Example Circuit Diagrams
Sheet 030a
No. of Sheets 19

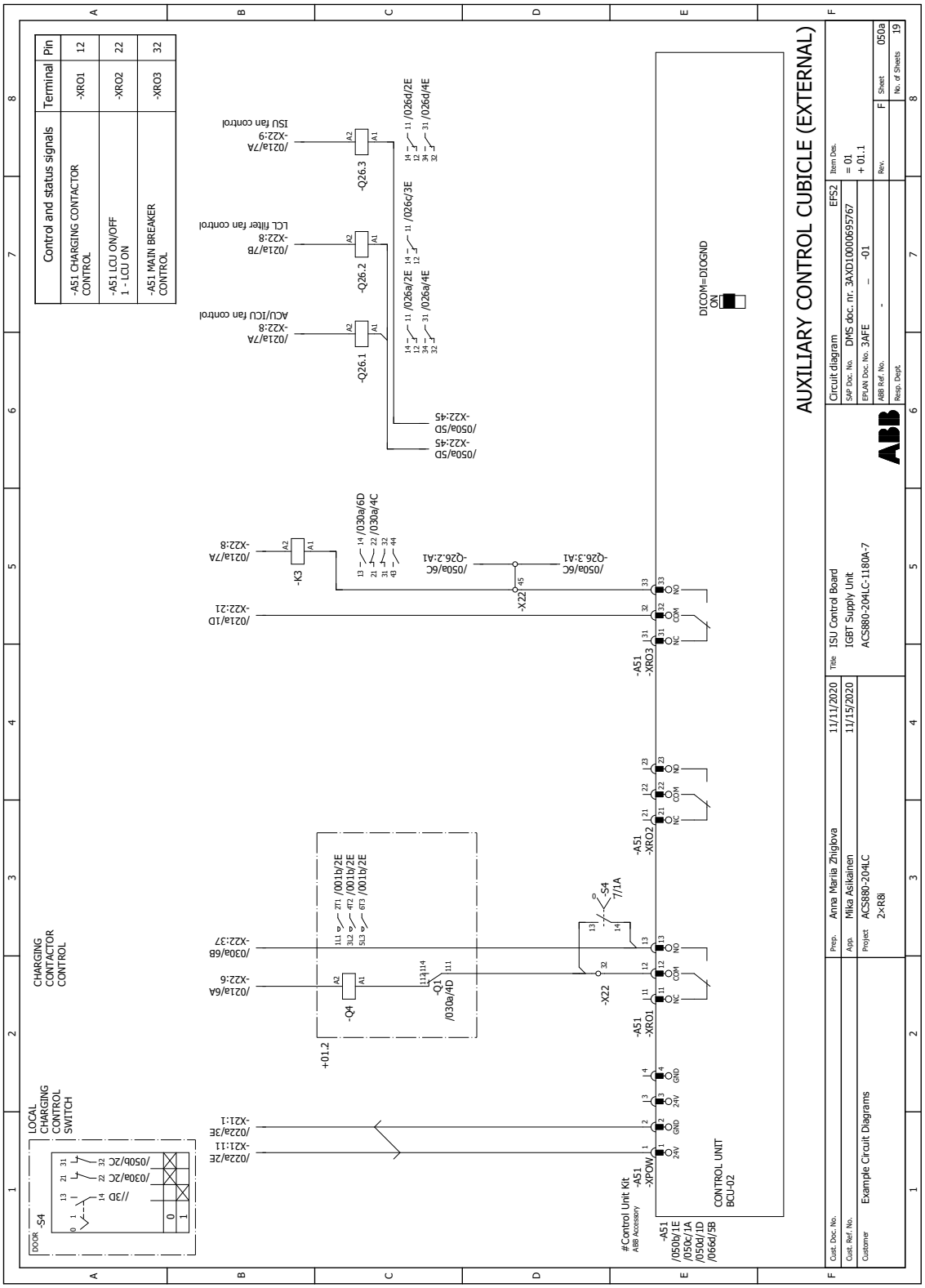
AUXILIARY CONTROL CUBICLE (EXTERNAL)
Control and status signals
Terminal
Pin
-A51 CHARGING CONTACTOR CONTROL
-XRO1
12
-A51 LCU ON/OFF
1 - LCU ON
-XRO2
22
-A51 MAIN BREAKER CONTROL
-XRO3
32
LOCAL CHARGING CONTROL SWITCH
DOOR -S4
CHARGING CONTACTOR CONTROL
ACU/ICU fan control
LCL filter fan control
ISU fan control
-Q26.1
-Q26.2
-Q26.3
-K3
-Q4
-Q1
-S4
-X22
-A51 -XRO1
-A51 -XRO2
-A51 -XRO3
-A51 -XPOW
DICOM=DIGGND
ON
CONTROL UNIT BCU-02
#Control Unit Kit
ABB Accessory
Circuit diagram
EFS2
SAP Doc. No.
EPLAN Doc. No. 3AFE – -01
ABB Ref. No. -
Resp. Dept.
Item Des.
= 01
+ 01.1
Rev.
F
Sheet 050a
No. of Sheets 19
Prep. Anna Mariia Zhigova 11/11/2020
Appr. Mika Asikainen 11/15/2020
Project ACS880-204LC 2×R8
Title ISU Control Board
IGBT Supply Unit
ACS880-204LC-1180A-7
Cust. Doc. No.
Cust. Ref. No.
Customer Example Circuit Diagrams

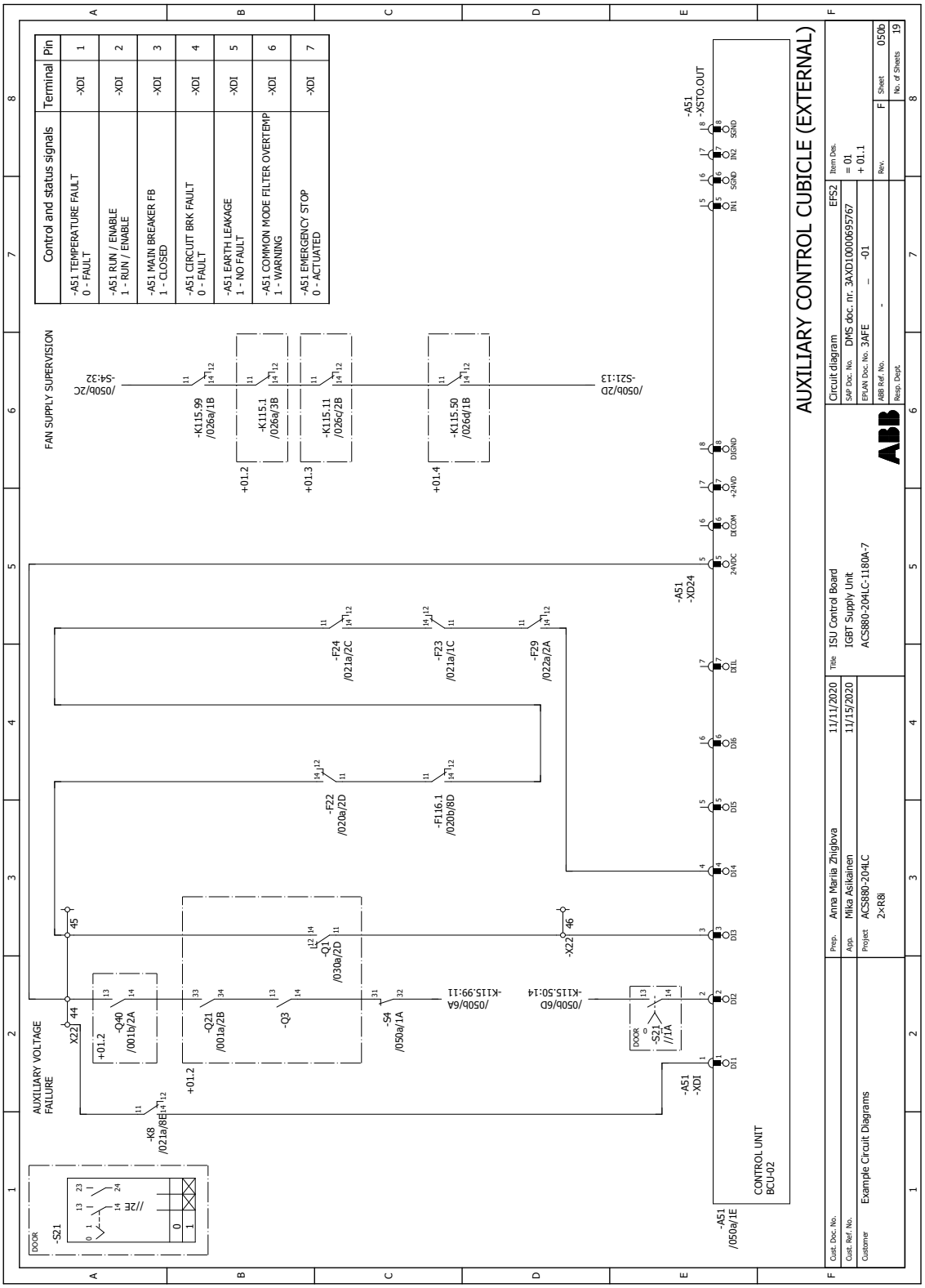
AUXILIARY CONTROL CUBICLE (EXTERNAL)
Control and status signals
Terminal
Pin
-A51 TEMPERATURE FAULT
0 - FAULT
-XDI
1
-A51 RUN / ENABLE
1 - RUN / ENABLE
-XDI
2
-A51 MAIN BREAKER FB
1 - CLOSED
-XDI
3
-A51 CIRCUIT BRK FAULT
0 - FAULT
-XDI
4
-A51 EARTH LEAKAGE
1 - NO FAULT
-XDI
5
-A51 COMMON MODE FILTER OVERTEMP
1 - WARNING
-XDI
6
-A51 EMERGENCY STOP
0 - ACTUATED
-XDI
7
FAN SUPPLY SUPERVISION
AUXILIARY VOLTAGE FAILURE
CONTROL UNIT BCU-02
-A51 -XSTO.OUT
-A51 -XD24
-A51 -XDI
-A51 /050a/1E
Circuit diagram
EFS2
Item Des.
= 01
+ 01.1
SAP Doc. No. DMS doc. nr. 3AXD10000695767
EPLAN Doc. No. 3AFE _ -01
ABB Ref. No. -
Resp. Dept.
Rev. F
Sheet 050b
No. of Sheets 19
Title ISU Control Board
IGBT Supply Unit
ACS880-204LC-1180A-7
Prep. Anna Maria Zhiglova 11/11/2020
App. Mika Asikainen 11/15/2020
Project ACS880-204LC
2×R8i
Customer Example Circuit Diagrams
Cust. Doc. No.
Cust. Ref. No.

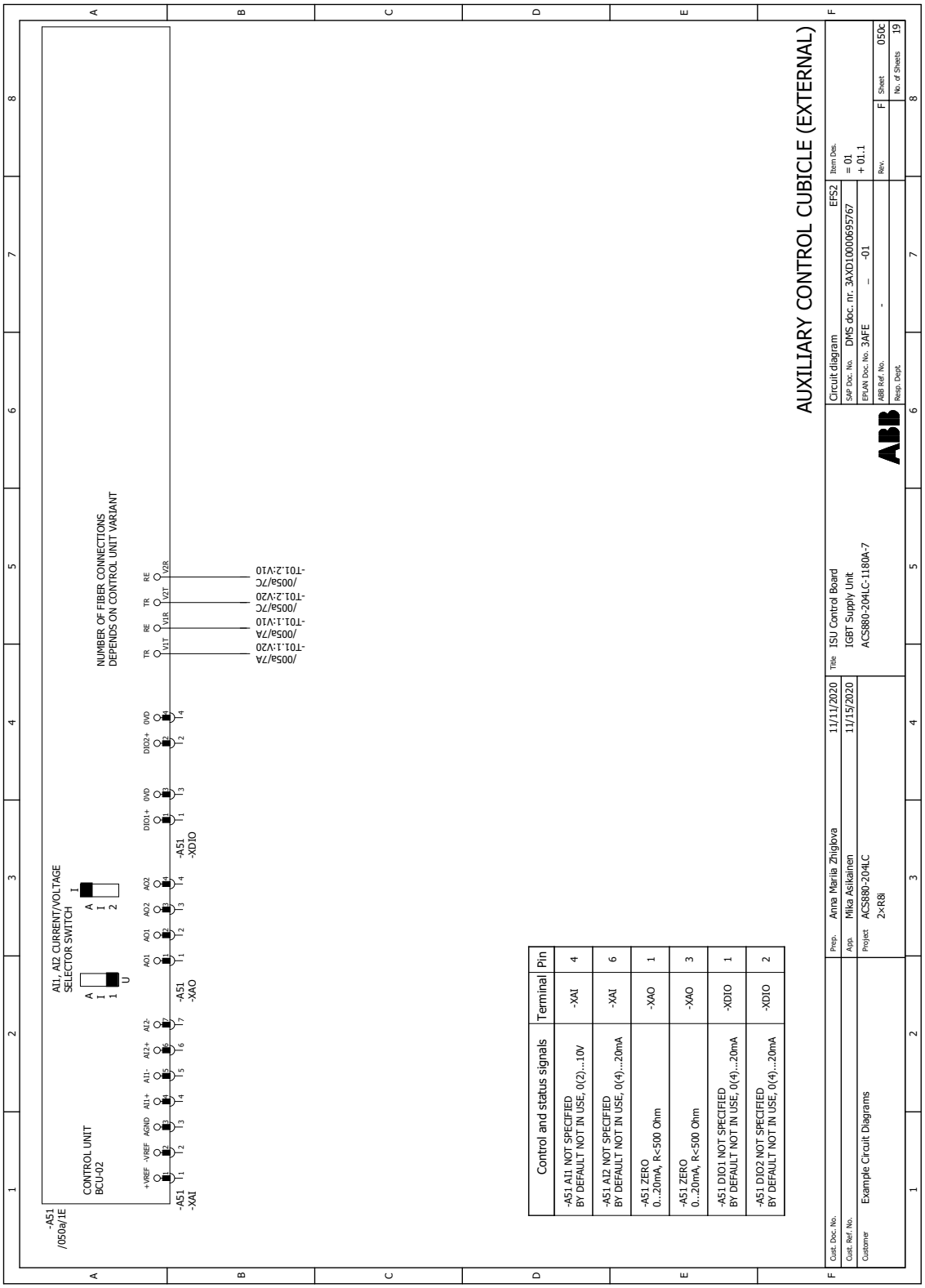
AUXILIARY CONTROL CUBICLE (EXTERNAL)
-A51
/050a/1E
CONTROL UNIT
BCU-02
AI1, AI2 CURRENT/VOLTAGE
SELECTOR SWITCH
NUMBER OF FIBER CONNECTIONS
DEPENDS ON CONTROL UNIT VARIANT
-A51
-XAI
-A51
-XAO
-A51
-XDIO
/005a/7A
-T01.1:V20
/005a/7A
-T01.1:V10
/005a/7C
-T01.2:V20
/005a/7C
-T01.2:V10
Control and status signals
-A51 AI1 NOT SPECIFIED
BY DEFAULT NOT IN USE, 0(2)...10V
-A51 AI2 NOT SPECIFIED
BY DEFAULT NOT IN USE, 0(4)...20mA
-A51 ZERO
0...20mA, R<500 Ohm
-A51 ZERO
0...20mA, R<500 Ohm
-A51 DIO1 NOT SPECIFIED
BY DEFAULT NOT IN USE, 0(4)...20mA
-A51 DIO2 NOT SPECIFIED
BY DEFAULT NOT IN USE, 0(4)...20mA
Terminal
-XAI
-XAI
-XAO
-XAO
-XDIO
-XDIO
Pin
4
6
1
3
1
2
Prep. Anna Mariia Zhigiova 11/11/2020
Appr. Mika Asikainen 11/15/2020
Project ACS880-204LC
2×R8i
Title ISU Control Board
IGBT Supply Unit
ACS880-204LC-1180A-7
Circuit diagram EFS2
SAP Doc. No. DMS doc. nr. 3AXD10000695767
EPLAN Doc. No. 3AFE – -01
ABB Ref. No. -
Resp. Dept.
Item Des.
= 01
+ 01.1
Rev. F
Sheet 050c
No. of Sheets 19
Cust. Doc. No.
Cust. Ref. No.
Customer Example Circuit Diagrams

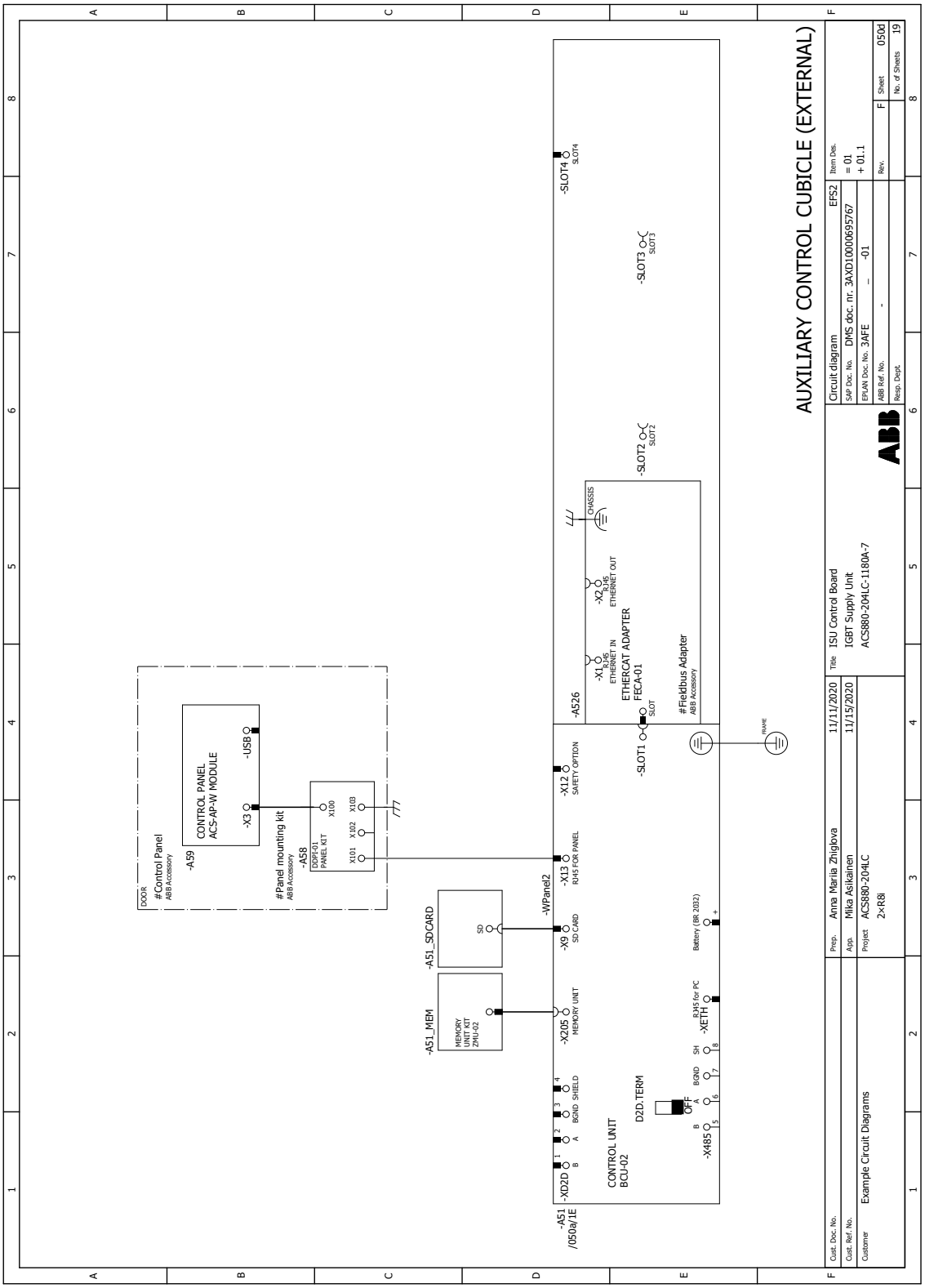
AUXILIARY CONTROL CUBICLE (EXTERNAL)
DOOR
#Control Panel
ABB Accessory
-A59
CONTROL PANEL
ACS-AP-W MODULE
-X3
-U5B
#Panel mounting kit
ABB Accessory
-A58
DDPI-01
PANEL KIT
X100
X101
X102
X103
-WPanel2
-A51_SDCARD
SD
-A51_MEM
MEMORY
UNIT KIT
ZMU-02
-X205
MEMORY UNIT
-X9
SD CARD
-X13
RJ45 FOR PANEL
-X12
SAFETY OPTION
-A51
/050a/1E
-XD2D
B
A
BGND
SHIELD
CONTROL UNIT
BCU-02
D2D.TERM
OFF
-X485
B
A
BGND
SH
-XETH
RJ45 for PC
Battery (BR 2032)
-A526
ETHERCAT ADAPTER
FECA-01
SLOT
-SLOT1
-SLOT2
-SLOT3
-SLOT4
#Fieldbus Adapter
ABB Accessory
-X1
RJ45
ETHERNET IN
-X2
RJ45
ETHERNET OUT
CHASSIS
FRAME
Cust. Doc. No.
Cust. Ref. No.
Customer
Example Circuit Diagrams
Prep.
Anna Mariia Zhiglova
11/11/2020
Appr.
Mika Asikainen
11/15/2020
Project
ACS880-204LC
2×R8i
Title
ISU Control Board
IGBT Supply Unit
ACS880-204LC-1180A-7
Circuit diagram
EF52
SAP Doc. No.
DMS doc. nr. 3AXD10000695767
EPLAN Doc. No.
3AFE
-01
ABB Ref. No.
-
Resp. Dept.
Item Des.
= 01
+ 01.1
Rev.
F
Sheet
050d
No. of Sheets
19

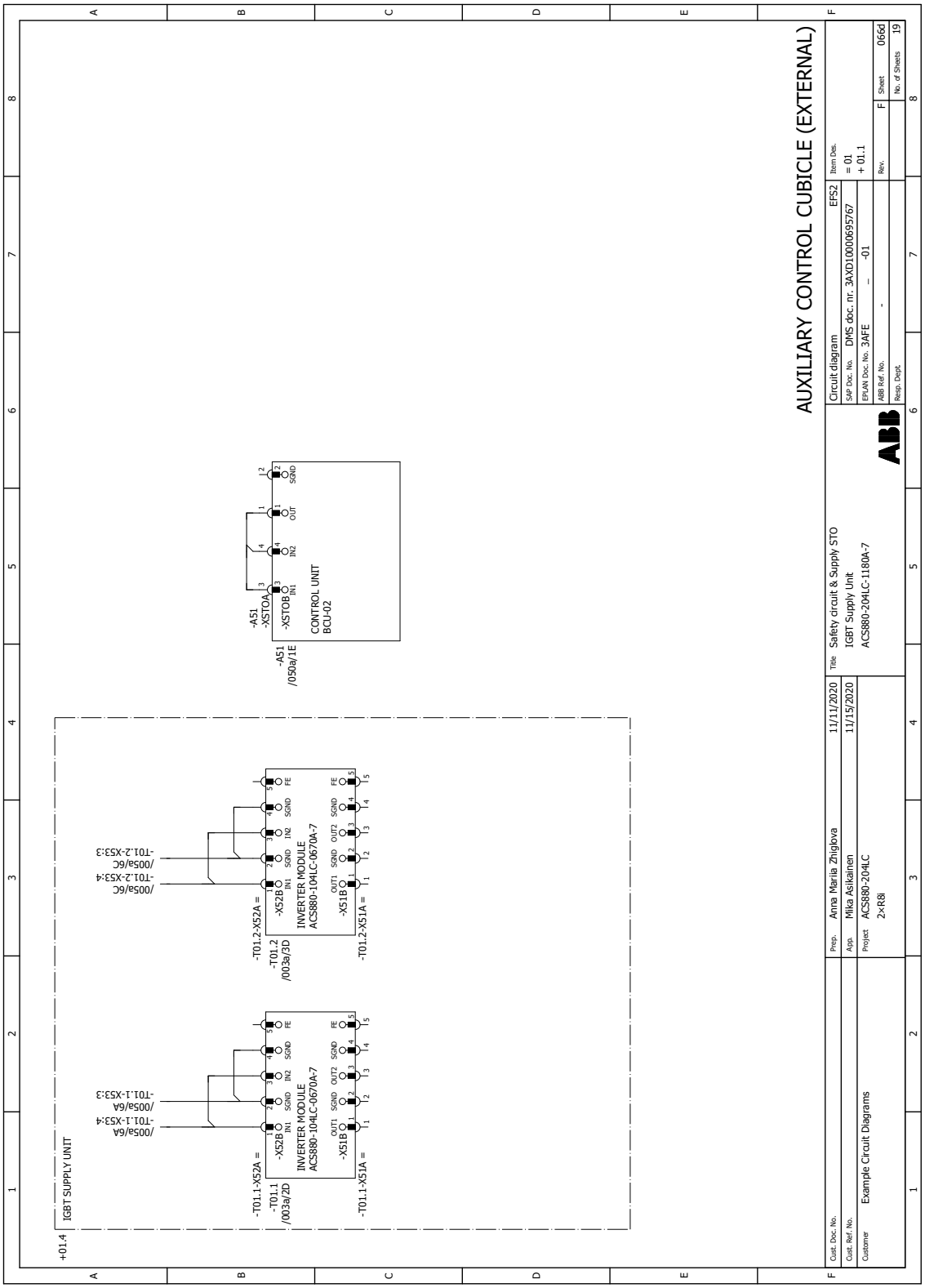
AUXILIARY CONTROL CUBICLE (EXTERNAL)
+01.4
IGBT SUPPLY UNIT
-T01.1-X52A =
-T01.1
/003a/2D
-X52B
INVERTER MODULE
ACS880-104LC-0670A-7
-X51B
-T01.1-X51A =
/005a/6A
-T01.1-X53:4
/005a/6A
-T01.1-X53:3
-T01.2-X52A =
-T01.2
/003a/3D
-T01.2-X53:4
/005a/6C
-T01.2-X53:3
-T01.2-X51A =
-A51
/050a/1E
-XSTOA
-XSTOB
CONTROL UNIT
BCU-02
Safety circuit & Supply STO
IGBT Supply Unit
ACS880-204LC-1180A-7
EFS2
Prep. Anna Mariia Zhigova 11/11/2020
Appr. Mika Asikainen 11/15/2020
Project ACS880-204LC 2×R8i
Example Circuit Diagrams
Circuit diagram
DMS doc. nr. 3AXD10000695767
3AFE – -01
Item Des. = 01 + 01.1
Sheet 066d
No. of Sheets 19

Frame 4×R8i

Example Circuit Diagrams
Project type
ACS880-204LC
IGBT Supply Unit
Converter type
4×R8i
Frame Size
ACS880-204LC-2930A-7
Type Code
Revision F
Revision
Title page / cover sheet
Used EPLAN version: P8 2.9.4.14734

Higher-level function	Page	Page description	Revision
	000A	Title page / cover sheet	F
	000D	Structured identifier overview	F
	000E	Summarized parts list	F
	000F	Summarized parts list	F
	000G	Summarized parts list	F
	300A	Symbol Overview	F
01	001a	Main supply, Aux. supply switch	F
	001b	Line-up charging circuit	F
	002a	LCL filter	F
	002b	LCL filter	F
	003a	Drive main circuit	F
	003b	Drive main circuit	F
	004a	BSFC	F
	004b	BSFC	F
	005a	Module control circuit	F
	005b	Module control circuit	F
	020a	Auxiliary transformer	F
	020b	External fan supply	F
	021a	Auxiliary circuit	F
	022a	24V Distribution	F
	026a	ACU/ICU fan control	F
	026c	LCL fan control	F
	026d	ISU fan control	F
	026e	ISU fan control	F
	030a	Air circuit breaker	F
	050a	ISU Control Board	F
	050b	ISU Control Board	F
	050c	ISU Control Board	F

Cust. Doc. No.	Prep. Anna Mariia Zhiglova 11/11/2020	Title Table of contents	Item Des. = +
Cust. Ref. No.	App. Mika Asikainen 11/15/2020		SAP Doc. No. DMS doc. nr. 3AXD10000695768
Customer Example Circuit Diagrams	Project ACS880-204LC 4×R8i		EPLAN Doc. No. 3AFE _ -
		ABB	ABB Ref. No. -
			Resp. Dept.
			Rev. F
			Sheet 000B
			No. of Sheets 8

Higher-level function	Page	Page description	Revision
01	050d	ISU Control Board	F
	066d	Safety circuit & Supply STO	F

Cust. Doc. No.	Prep. Anna Mariia Zhiglova 11/11/2020	Title Table of contents	Item Des. = +
Cust. Ref. No.	App. Mika Asikainen 11/15/2020	SAP Doc. No. DMS doc. nr. 3AXD10000695768	
Customer Example Circuit Diagrams	Project ACS880-204LC 4×R8i	EPLAN Doc. No. 3AFE _ -	Rev. F / Sheet 000C
		ABB Ref. No. -	No. of Sheets 8
		Resp. Dept.	

Function designations

Designation	Structure description
=01	IGBT Supply Unit

Location designations

Designation	Structure description
+01.1	Auxiliary Control Cubicle (External)
+01.2	Incoming Cubicle (External)
+01.3	First LCL Filter Cubicle
+01.4	Second LCL Filter Cubicle
+01.5	First IGBT Supply Cubicle
+01.6	Second IGBT Supply Cubicle

Electrical option designations

Designation	Material Code	Amount
Air Circuit Breaker	3AXD50000189571	1
CIO I/O module	3AXD50000041983	2
CM Filter	3AXD50000566785	8
Charging Kit	3AXD50000226801, 3AXD50000251216	3
Control Panel	3AXD50000025965	1
Control Unit Kit	3AXD50000015806	1
Cooling Fan	3AXD50000043886, 3AXD50000050763	6
Fieldbus Adapter	3AUA0000072069	1
Filter Unit Kit	3AXD50000234448	2
Fuse	68752591, 3AUA0000086673	14
Panel mounting kit	3AUA0000108878	1
Resistor	10028531	12
Supply Module	'ACS880-104LC-0850A-7	4
Switch Kit	3AXD50000227044, 3AXD50000507078	3

Cust. Doc. No.	Prep. Anna Mariia Zhiglova 11/11/2020	Title Structured identifier overview		Item Des.
Cust. Ref. No.	App. Mika Asikainen 11/15/2020		SAP Doc. No. DMS doc. nr. 3AXD10000695768	=
Customer Example Circuit Diagrams	Project ACS880-204LC 4×R8i		EPLAN Doc. No. 3AFE _ -	+
		ABB	ABB Ref. No. -	Rev. F / Sheet 000D
			Resp. Dept.	No. of Sheets 8

GENERAL/RELAY COIL, WITH PROTECTIVE CIRCUIT DIODE AND R+LED

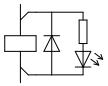

GENERAL/RELAY COIL

COIL WITH PICK-UP DELAY

COIL WITH OFF-DELAY

NO CONTACT

NC CONTACT

CHANGE OVER CONTACT

NO CONTACT, WITH CLOSING DELAY

TWO NO CONTACTS ONE INPUT, TWO OUTPUTS

TWO CONNECTED CHANGE OVER CONTACTS

POWER NO CONTACT OF A CONTACTOR

PUSH BUTTON WITH NO CONTACT

PUSH BUTTON WITH NC CONTACT

NO SWITCH, OPERATED BY TURNING, 2 POSITIONS

LIMIT SWITCH NC CONTACT MECHANICALLY OPERATED

NC SWITCH, TEMPERATURE OPERATED

EMERGENCY STOP PUSH BUTTON

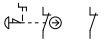

DISCONNECT SWITCH, THREE-POLE

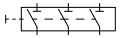

SWITCH DISCONNECTOR WITH FUSES, THREE-POLE

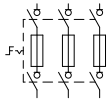

FUSE

FUSE DISCONNECTOR

CIRCUIT BREAKER

MOTOR OVERLOAD SWITCH WITH SWITCH MECHANISM

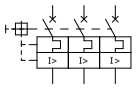

COMMON MODE FILTER FOR HIGH FREQUENCY CURRENTS

PROTECTIVE EARTH CONNECTED TO FRAME

PROTECTIVE EARTH CONNECTED TO TERMINAL / PE BUSBAR

FUNCTIONAL EARTHING CONNECTED TO TERMINAL

FUNCTIONAL BONDING TO FRAME

LIGHT

INDUCTOR

CAPACITOR

RESISTOR

POWER RESISTOR WITH FUSE

PHASE SELECTING SWITCH

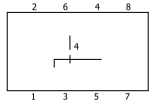

TRANSFORMER

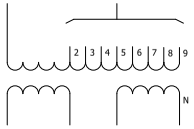

EMC FILTER

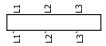

TERMINAL, FOUR POLE

PLUG AND SOCKET TERMINAL BLOCK WITH 4 CONNECTION POINTS

FEMALE AND MALE PLUG

AMPERE METER

CURRENT TRANSFORMER

VOLTAGE METER

WIRE TERMINATION, INSULATED

SHIELDED CABLE

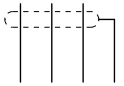

THERMAL OPERATION

DISCONNECT

DISCONNECT, CAN BE OPERATED WHILE NOMINAL CURRENT IS APPLIED

BREAKER, SHORTCIRCUIT BREAKING CAPABILITY

Cust. Doc. No.	Prep. Anna Mariia Zhiglova 11/11/2020	Title Symbol Overview		Item Des.	
Cust. Ref. No.	App. Mika Asikainen 11/15/2020		SAP Doc. No. DMS doc. nr. 3AXD10000695768	=	
Customer Example Circuit Diagrams	Project ACS880-204LC 4×R8i		EPLAN Doc. No. 3AFE _ -	+	
		ABB	ABB Ref. No. -	Rev. F	Sheet 300A
			Resp. Dept.		No. of Sheets 8

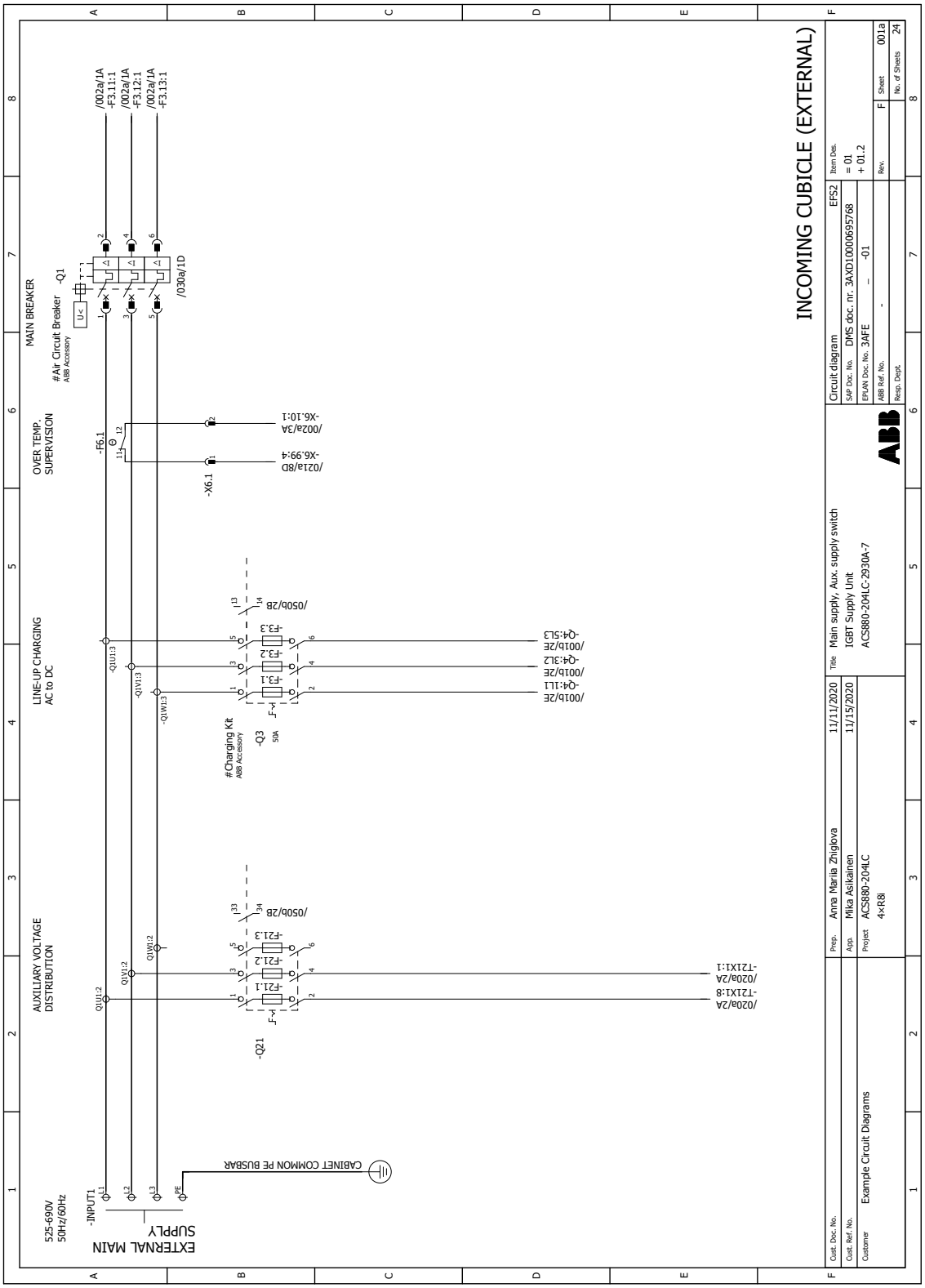
INCOMING CUBICLE (EXTERNAL)
EXTERNAL MAIN SUPPLY
525-690V 50Hz/60Hz
-INPUT1
CABINET COMMON PE BUSBAR
AUXILIARY VOLTAGE DISTRIBUTION
LINE-UP CHARGING AC to DC
OVER TEMP. SUPERVISION
MAIN BREAKER
#Air Circuit Breaker ABB Accessory
-Q1
-Q21
-Q3
#Charging Kit ABB Accessory
-F6.1
-X6.1
Main supply, Aux. supply switch
IGBT Supply Unit
ACS880-204LC-2930A-7
Circuit diagram
EFS2
DMS doc. nr. 3AXD10000695768
3AFE -01
Anna Mariia Zhigiova 11/11/2020
Mika Asikainen 11/15/2020
ACS880-204LC 4×R8i
Example Circuit Diagrams

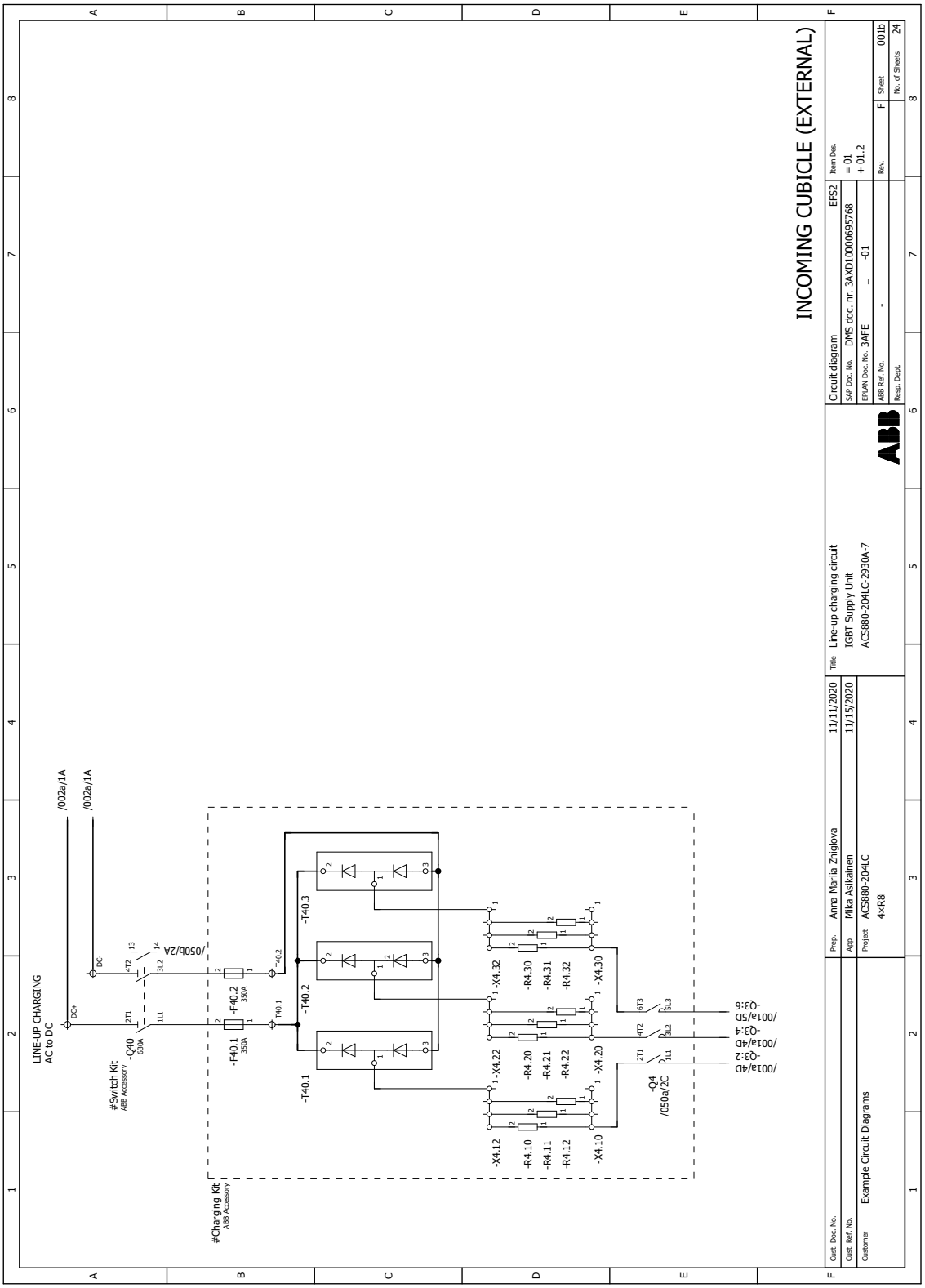
INCOMING CUBICLE (EXTERNAL)
LINE-UP CHARGING
AC to DC
#Charging Kit
ABB Accessory
#Switch Kit
ABB Accessory
-Q40
630A
-F40.1
350A
-F40.2
350A
-T40.1
-T40.2
-T40.3
-Q4
/050a/2C
/050b/2A
/002a/1A
/002a/1A
-X4.10
-X4.12
-X4.20
-X4.22
-X4.30
-X4.32
-R4.10
-R4.11
-R4.12
-R4.20
-R4.21
-R4.22
-R4.30
-R4.31
-R4.32
-Q3:2
-Q3:4
-Q3:6
/001a/4D
/001a/4D
/001a/5D
Line-up charging circuit
IGBT Supply Unit
ACS880-204LC-2930A-7
Circuit diagram
EFS2
DMS doc. nr. 3AXD10000695768
3AFE
-01
Item Des.
= 01
+ 01.2
Sheet
001b
No. of Sheets
24
Prep.
Anna Mariia Zhiglova
11/11/2020
Appr.
Mika Asikainen
11/15/2020
Project
ACS880-204LC
4×R8i
Example Circuit Diagrams
Customer

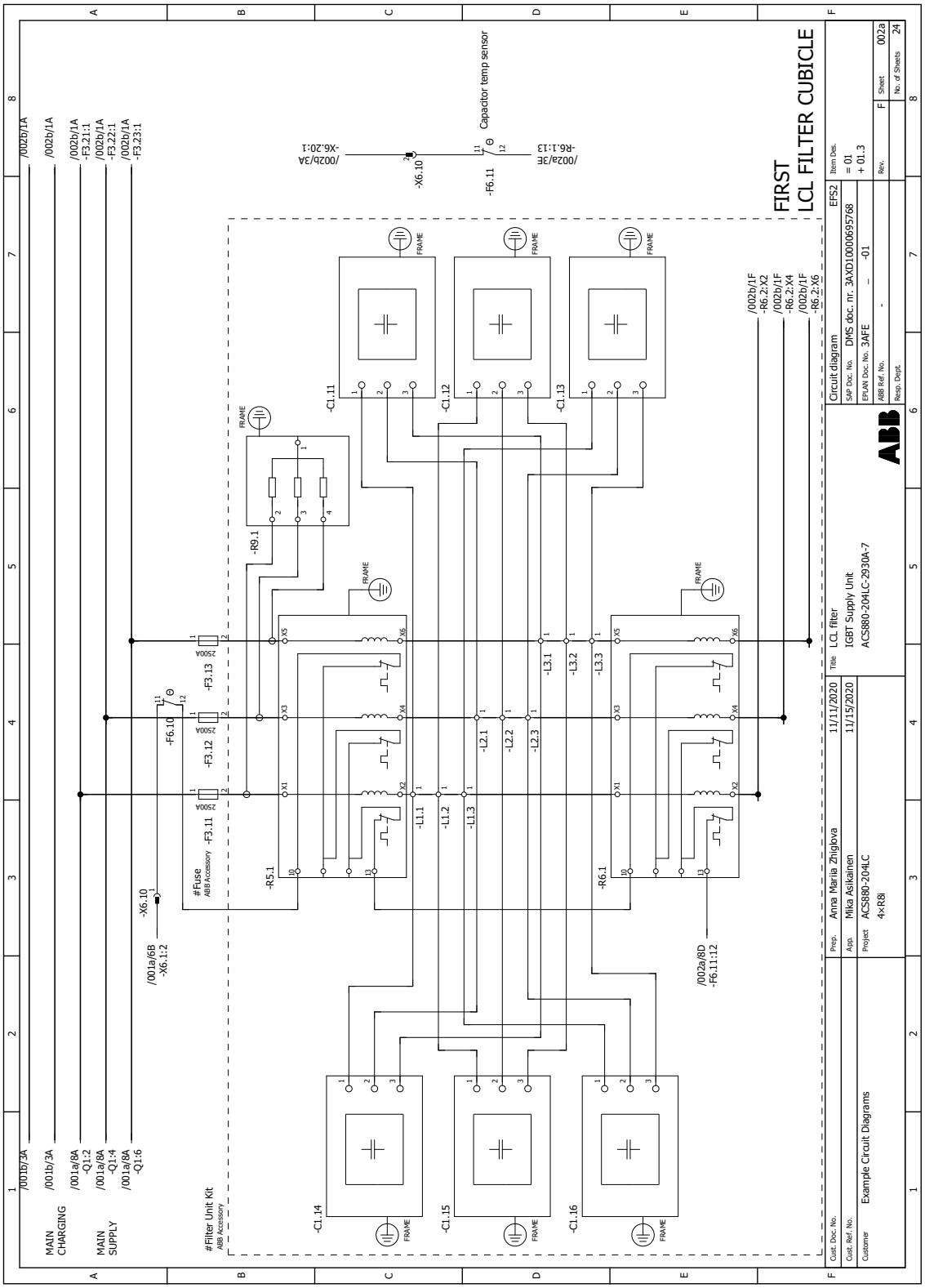
FIRST
LCL FILTER CUBICLE
Circuit diagram
EFS2
Item Des.
= 01
+ 01.3
SAP Doc. No.
EPLAN Doc. No. 3AFE – -01
ABB Ref. No. -
Resp. Dept.
Rev.
F
Sheet 002a
No. of Sheets 24
Prep. Anna Mariia Zhigiova 11/11/2020
Appr. Mika Asikainen 11/15/2020
Project ACS880-204LC 4×R8i
Cust. Doc. No.
Cust. Ref. No.
Customer Example Circuit Diagrams
Title LCL filter
IGBT Supply Unit
ACS880-204LC-2930A-7
#Filter Unit Kit
ABB Accessory
#Fuse
ABB Accessory
MAIN CHARGING
MAIN SUPPLY
Capacitor temp sensor
-X6.10
-F6.11
-R6.1:13
/002a/3E
/002b/3A
-X6.20:1
/002b/1A
-F3.21:1
-F3.22:1
-F3.23:1
/001b/3A
/001a/8A
-Q1:2
-Q1:4
-Q1:6
/001a/6B
-X6.1:2
-F3.11
-F3.12
-F3.13
-F6.10
2500A
-R5.1
-R6.1
-R9.1
-L1.1
-L1.2
-L1.3
-L2.1
-L2.2
-L2.3
-L3.1
-L3.2
-L3.3
-C1.11
-C1.12
-C1.13
-C1.14
-C1.15
-C1.16
FRAME
/002b/1F
-R6.2:X2
-R6.2:X4
-R6.2:X6
/002a/8D
-F6.11:12

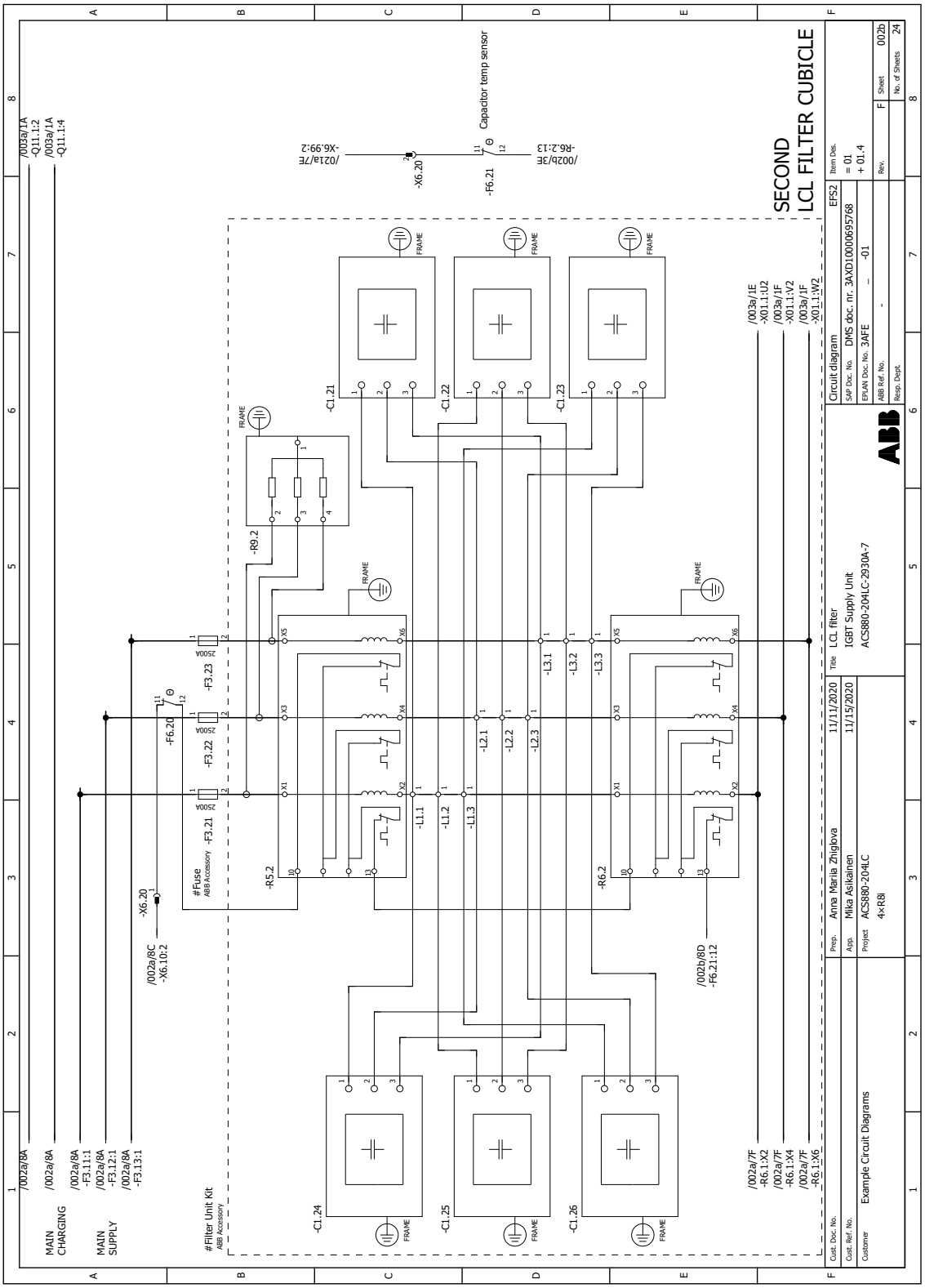
SECOND
LCL FILTER CUBICLE
Capacitor temp sensor
MAIN CHARGING
MAIN SUPPLY
#Filter Unit Kit
ABB Accessory
#Fuse
ABB Accessory
Circuit diagram
DMS doc. nr. 3AXD10000695768
Title
LCL filter
IGBT Supply Unit
ACS880-204LC-2930A-7
Prep.
Anna Maria Zhiglova
11/11/2020
App.
Mika Asikainen
11/15/2020
Project
ACS880-204LC
4×R8i
Customer
Example Circuit Diagrams
Sheet
002b
No. of Sheets
24

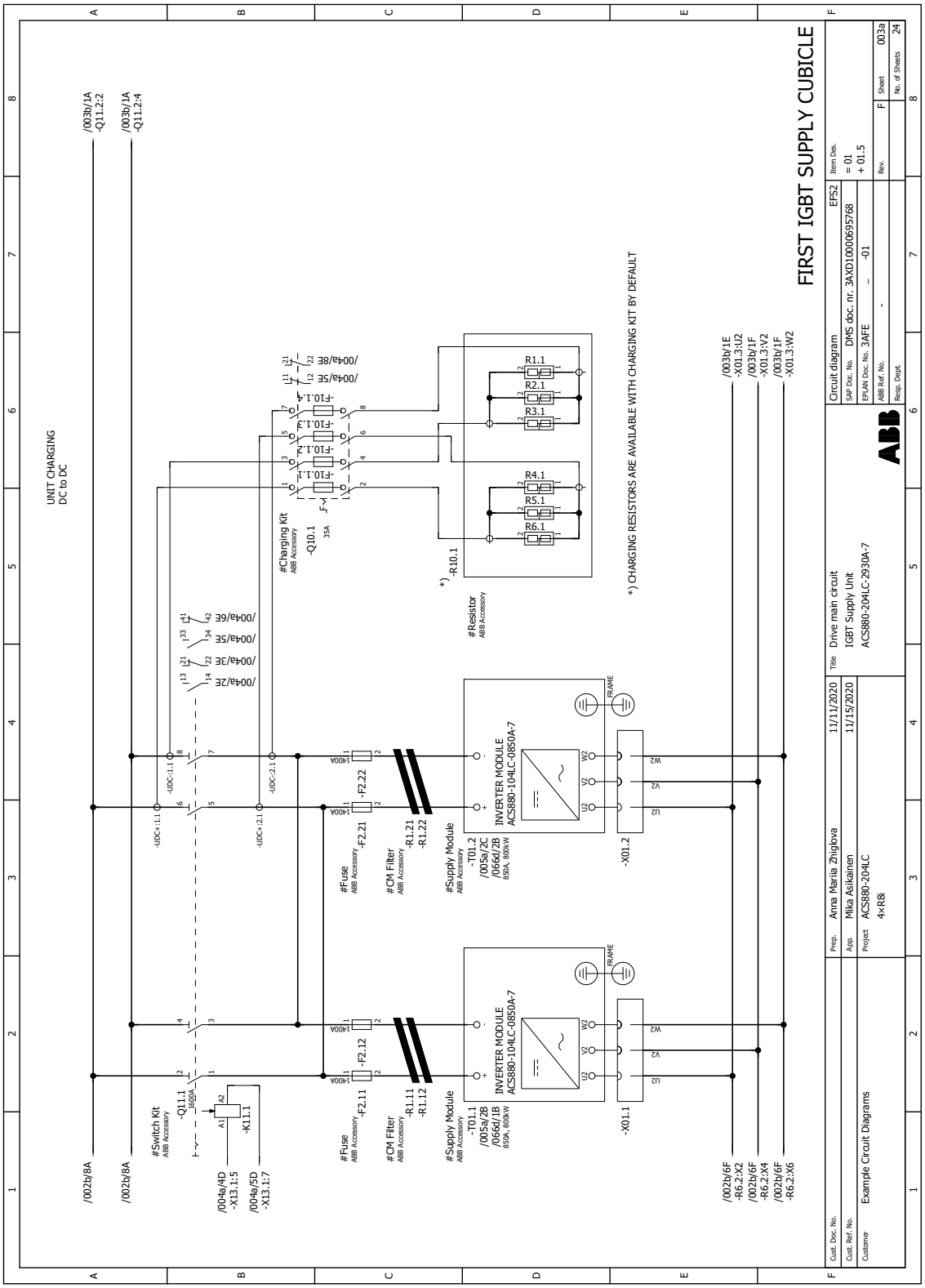
FIRST IGBT SUPPLY CUBICLE
UNIT CHARGING
DC to DC
/003b/1A
-Q11.2:2
/003b/1A
-Q11.2:4
/002b/8A
/002b/8A
#Switch Kit
ABB Accessory
-Q11.1
160A
-K11.1
/004a/4D
-X13.1:5
/004a/5D
-X13.1:7
-UDC+:1.1
-UDC-:1.1
-UDC+:2.1
-UDC-:2.1
/004a/2E
/004a/3E
/004a/5E
/004a/6E
#Charging Kit
ABB Accessory
-Q10.1
35A
-F10.1.1
-F10.1.2
-F10.1.3
-F10.1.4
/004a/5E
/004a/8E
*)
-R10.1
#Resistor
ABB Accessory
R1.1
R2.1
R3.1
R4.1
R5.1
R6.1
*) CHARGING RESISTORS ARE AVAILABLE WITH CHARGING KIT BY DEFAULT
#Fuse
ABB Accessory
-F2.11
-F2.12
-F2.21
-F2.22
1400A
#CM Filter
ABB Accessory
-R1.11
-R1.12
-R1.21
-R1.22
#Supply Module
ABB Accessory
-T01.1
/005a/2B
/066d/1B
650A, 800kW
-T01.2
/005a/2C
/066d/2B
650A, 800kW
INVERTER MODULE
ACS880-104LC-0850A-7
FRAME
-X01.1
-X01.2
U2
V2
W2
/002b/6F
-R6.2:X2
/002b/6F
-R6.2:X4
/002b/6F
-R6.2:X6
/003b/1E
-X01.3:U2
/003b/1F
-X01.3:V2
/003b/1F
-X01.3:W2
Circuit diagram
EFS2
SAP Doc. No.
DMS doc. nr. 3AXD10000695768
EPLAN Doc. No. 3AFE – -01
ABB Ref. No. -
Resp. Dept.
Item Des.
= 01
+ 01.5
Rev.
F
Sheet 003a
No. of Sheets 24
Title
Drive main circuit
IGBT Supply Unit
ACS880-204LC-2930A-7
Prep. Anna Mariia Zhigova 11/11/2020
Appr. Mika Asikainen 11/15/2020
Project ACS880-204LC
4×R8i
Cust. Doc. No.
Cust. Ref. No.
Customer Example Circuit Diagrams

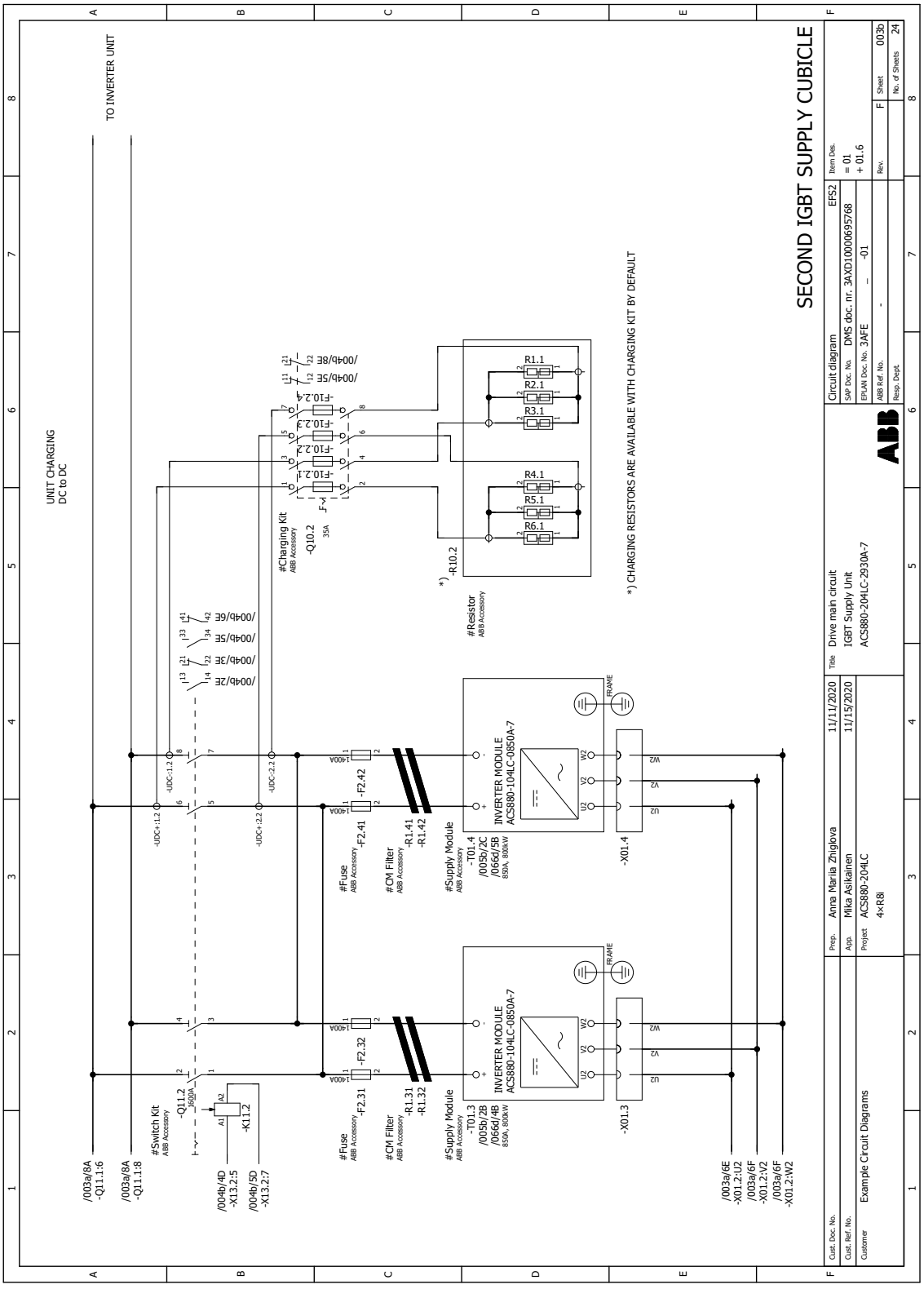
SECOND IGBT SUPPLY CUBICLE
TO INVERTER UNIT
UNIT CHARGING
DC to DC
*) CHARGING RESISTORS ARE AVAILABLE WITH CHARGING KIT BY DEFAULT
Circuit diagram
EFS2
SAP Doc. No. DMS doc. nr. 3AXD10000695768
EPLAN Doc. No. 3AFE – -01
ABB Ref. No. -
Resp. Dept.
Item Des. = 01 + 01.6
Rev. F
Sheet 003b
No. of Sheets 24
Cust. Doc. No.
Cust. Ref. No.
Customer Example Circuit Diagrams
Prep. Anna Mariia Zhiglova 11/11/2020
Appr. Mika Asikainen 11/15/2020
Project ACS880-204LC 4×R8i
Title Drive main circuit
IGBT Supply Unit
ACS880-204LC-2930A-7
-Q11.2 1600A
-K11.2
#Switch Kit ABB Accessory
-F2.31
-F2.32
-F2.41
-F2.42
#Fuse ABB Accessory
-R1.31
-R1.32
-R1.41
-R1.42
#CM Filter ABB Accessory
-T01.3 /005b/2B /066d/4B 850A, 800kW
-T01.4 /005b/2C /066d/5B 850A, 800kW
#Supply Module ABB Accessory
INVERTER MODULE ACS880-104LC-0850A-7
-X01.3
-X01.4
FRAME
-Q10.2 35A
#Charging Kit ABB Accessory
-F10.2.1
-F10.2.2
-F10.2.3
-F10.2.4
-R10.2
*)
R1.1
R2.1
R3.1
R4.1
R5.1
R6.1
#Resistor ABB Accessory
-UDC+:1.2
-UDC-:1.2
-UDC+:2.2
-UDC-:2.2
/003a/8A -Q11.1:6
/003a/8A -Q11.1:8
/004b/4D -X13.2:5
/004b/5D -X13.2:7
/003a/6E -X01.2:U2
/003a/6F -X01.2:V2
/003a/6F -X01.2:W2
/004b/7E
/004b/3E
/004b/5E
/004b/6E
/004b/8E
/004b/5E

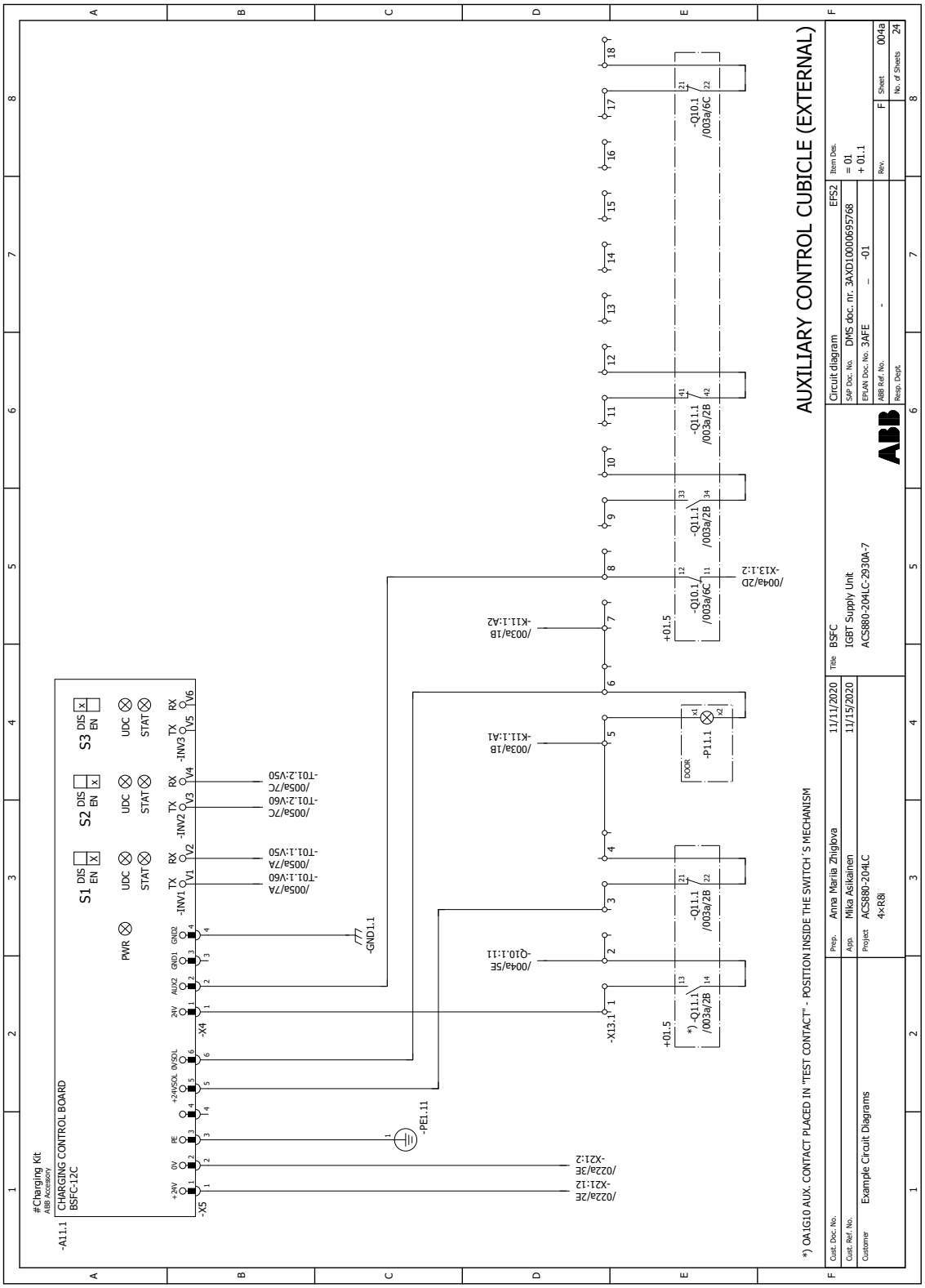
AUXILIARY CONTROL CUBICLE (EXTERNAL)
*) OA1G10 AUX. CONTACT PLACED IN "TEST CONTACT" - POSITION INSIDE THE SWITCH´S MECHANISM
Circuit diagram
SAP Doc. No. DMS doc. nr. 3AXD10000695768
EPLAN Doc. No. 3AFE – -01
ABB Ref. No. -
Resp. Dept.
Item Des.
= 01
+ 01.1
EFS2
Rev. F
Sheet 004a
No. of Sheets 24
Title BSFC
IGBT Supply Unit
ACS880-204LC-2930A-7
Prep. Anna Mariia Zhiglova 11/11/2020
App. Mika Asikainen 11/15/2020
Project ACS880-204LC
4×R8i
Cust. Doc. No.
Cust. Ref. No.
Customer Example Circuit Diagrams
#Charging Kit
ABB Accessory
CHARGING CONTROL BOARD
BSFC-12C
-A11.1
-X5
-X4
-X13.1
-X21:12
-X21:2
-PE1.11
-GND1.1
-Q10.1
-Q11.1
-P11.1
-K11.1:A1
-K11.1:A2
-T01.1:V50
-T01.1:V60
-T01.2:V50
-T01.2:V60
-INV1
-INV2
-INV3
S1
S2
S3
PWR
UDC
STAT
DIS
EN
TX
RX
+24V
0V
PE
+24VSOL
ON/SOL
AUX2
GND1
GND2
+01.5
DOOR
/003a/1B
/003a/2B
/003a/6C
/004a/2D
/004a/5E
/005a/7A
/005a/7C
/022a/2E
/022a/3E

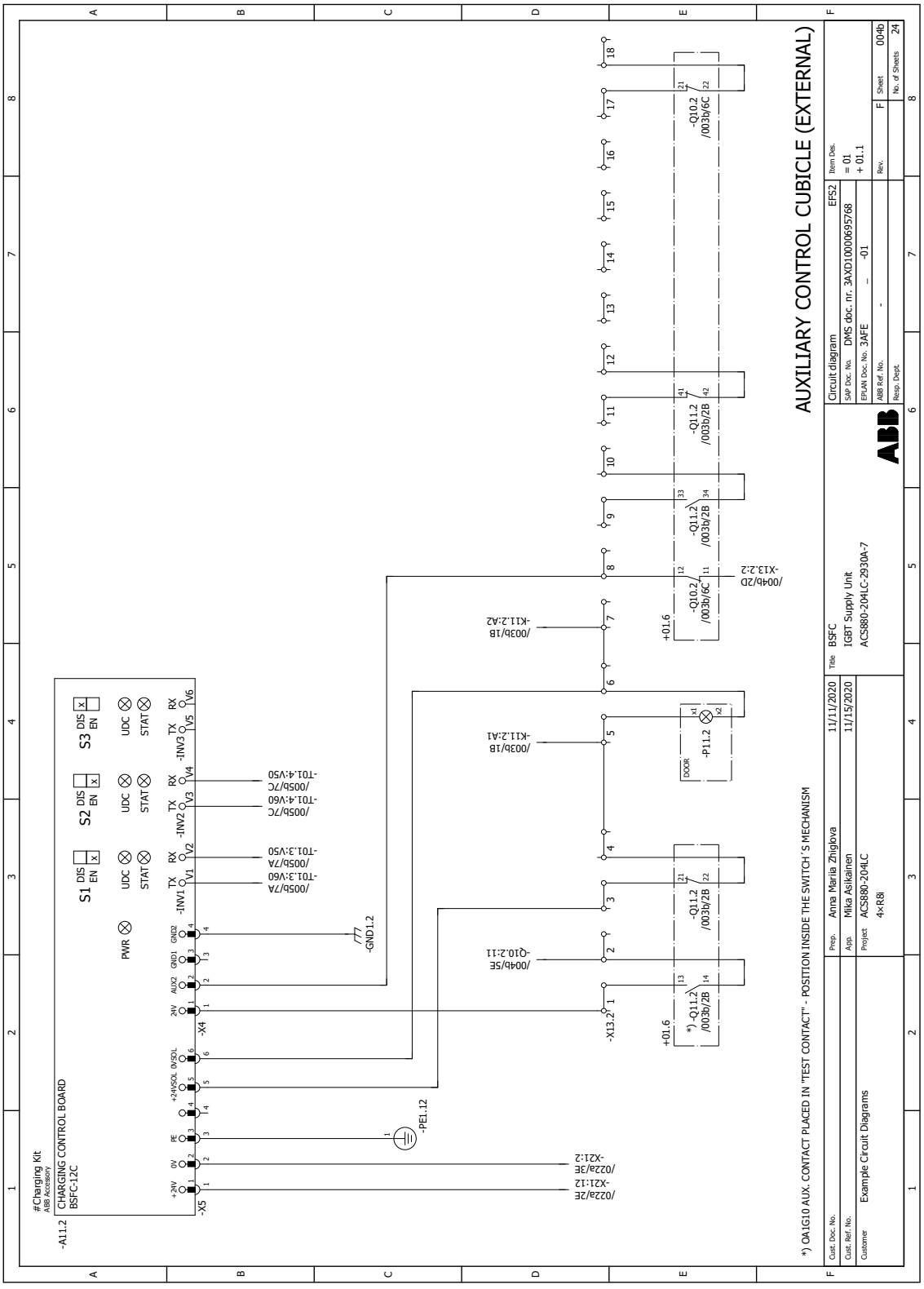
AUXILIARY CONTROL CUBICLE (EXTERNAL)
*) OA1G10 AUX. CONTACT PLACED IN "TEST CONTACT" - POSITION INSIDE THE SWITCH´S MECHANISM
#Charging Kit
ABB Accessory
CHARGING CONTROL BOARD
BSFC-12C
-A11.2
S1
S2
S3
PWR
UDC
STAT
-X5
-X4
-INV1
-INV2
-INV3
-GND1.2
-PE1.12
-X13.2
-Q10.2
/003b/6C
-Q11.2
/003b/2B
-P11.2
+01.6
/004b/2D
-X13.2:2
/003b/1B
-K11.2:A2
/003b/1B
-K11.2:A1
/004b/5E
-Q10.2:11
/022a/2E
-X21:12
/022a/3E
-X21:2
Prep. Anna Maria Zhiglova 11/11/2020
App. Mika Asikainen 11/15/2020
Project ACS880-204LC
4×R8i
Customer Example Circuit Diagrams
Title BSFC
IGBT Supply Unit
ACS880-204LC-2930A-7
Circuit diagram EFS2
SAP Doc. No. DMS doc. nr. 3AXD10000695768
EPLAN Doc. No. 3AFE _ -01
ABB Ref. No. -
Resp. Dept.
Item Des. = 01 + 01.1
Rev. F
Sheet 004b
No. of Sheets 24

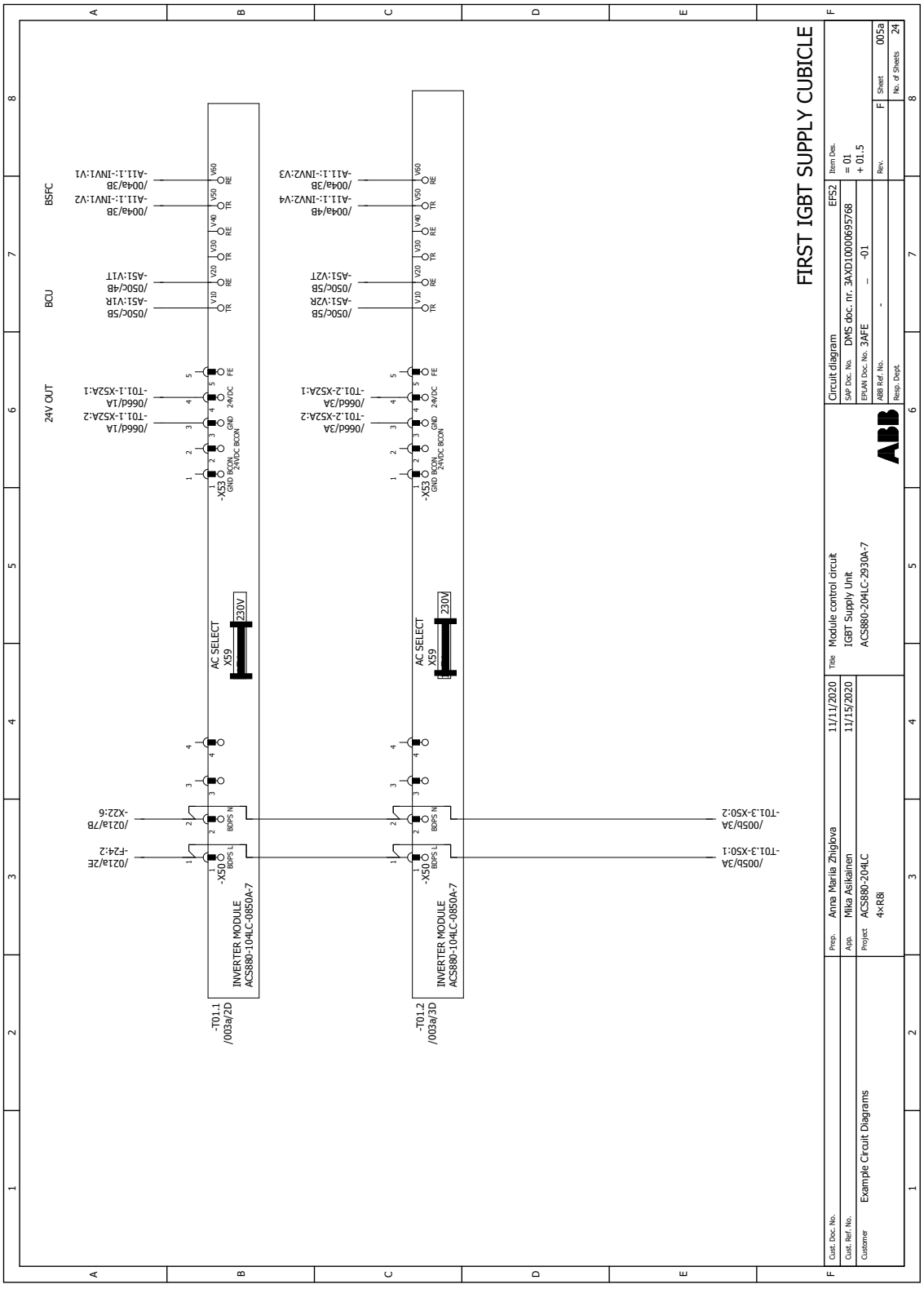
FIRST IGBT SUPPLY CUBICLE
Circuit diagram
EFS2
DMS doc. nr. 3AXD10000695768
3AFE
-01
Module control circuit
IGBT Supply Unit
ACS880-204LC-2930A-7
Anna Mariia Zhigiova
Mika Asikainen
ACS880-204LC
4×R8i
Example Circuit Diagrams
INVERTER MODULE
ACS880-104LC-0850A-7
-T01.1
/003a/2D
-T01.2
/003a/3D
AC SELECT
X59
230V
24V OUT
BCU
BSFC
-X53
-X50
-F24:2
/021a/2E
-XZ2:6
/021a/7B
-T01.3-X50:1
/005b/3A
-T01.3-X50:2
/005b/3A
-A51.V1R
/050c/5B
-A51.V1T
/050c/4B
-A51.V2R
/050c/5B
-A51.V2T
/050c/5B
-A11.1:-INV1:V1
/004a/3B
-A11.1:-INV1:V2
/004a/3B
-A11.1:-INV2:V3
/004a/4B
-A11.1:-INV2:V4
/004a/4B
-T01.1-XS2A:1
/066d/1A
-T01.1-XS2A:2
/066d/1A
-T01.2-XS2A:1
/066d/3A
-T01.2-XS2A:2
/066d/3A

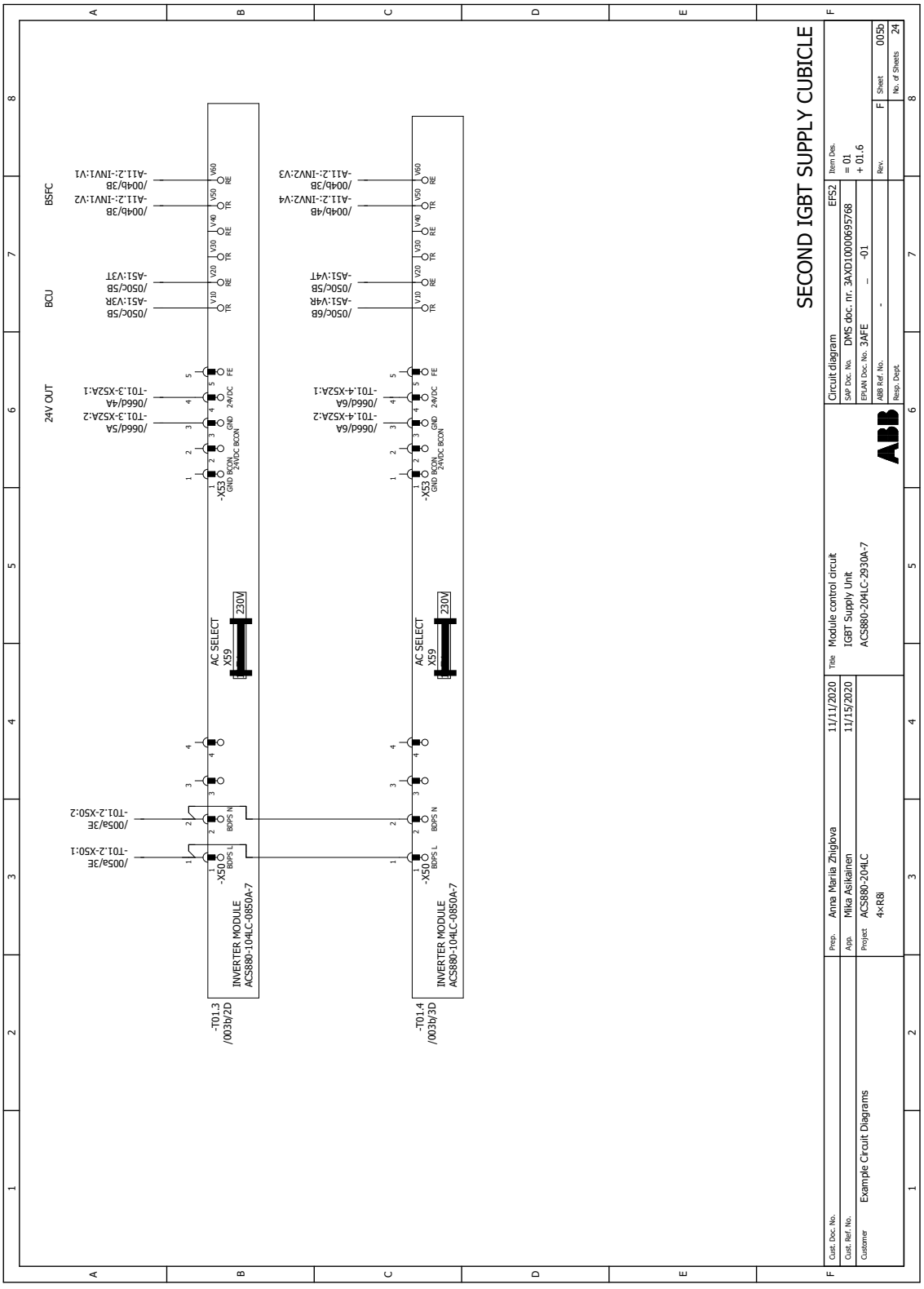
SECOND IGBT SUPPLY CUBICLE
Circuit diagram
EFS2
SAP Doc. No.
DMS doc. nr. 3AXD10000695768
EPLAN Doc. No.
3AFE -01
ABB Ref. No.
Rev.
Sheet
005b
Resp. Dept.
No. of Sheets
24
Item Des.
= 01
+ 01.6
Cust. Doc. No.
Cust. Ref. No.
Customer
Example Circuit Diagrams
Prep.
Anna Mariia Zhiglova
11/11/2020
Appr.
Mika Asikainen
11/15/2020
Project
ACS880-204LC
4×R8i
Title
Module control circuit
IGBT Supply Unit
ACS880-204LC-2930A-7
24V OUT
BCU
BSFC
INVERTER MODULE
ACS880-104LC-0850A-7
AC SELECT
X59
230V
-T01.3
/003b/2D
-T01.4
/003b/3D

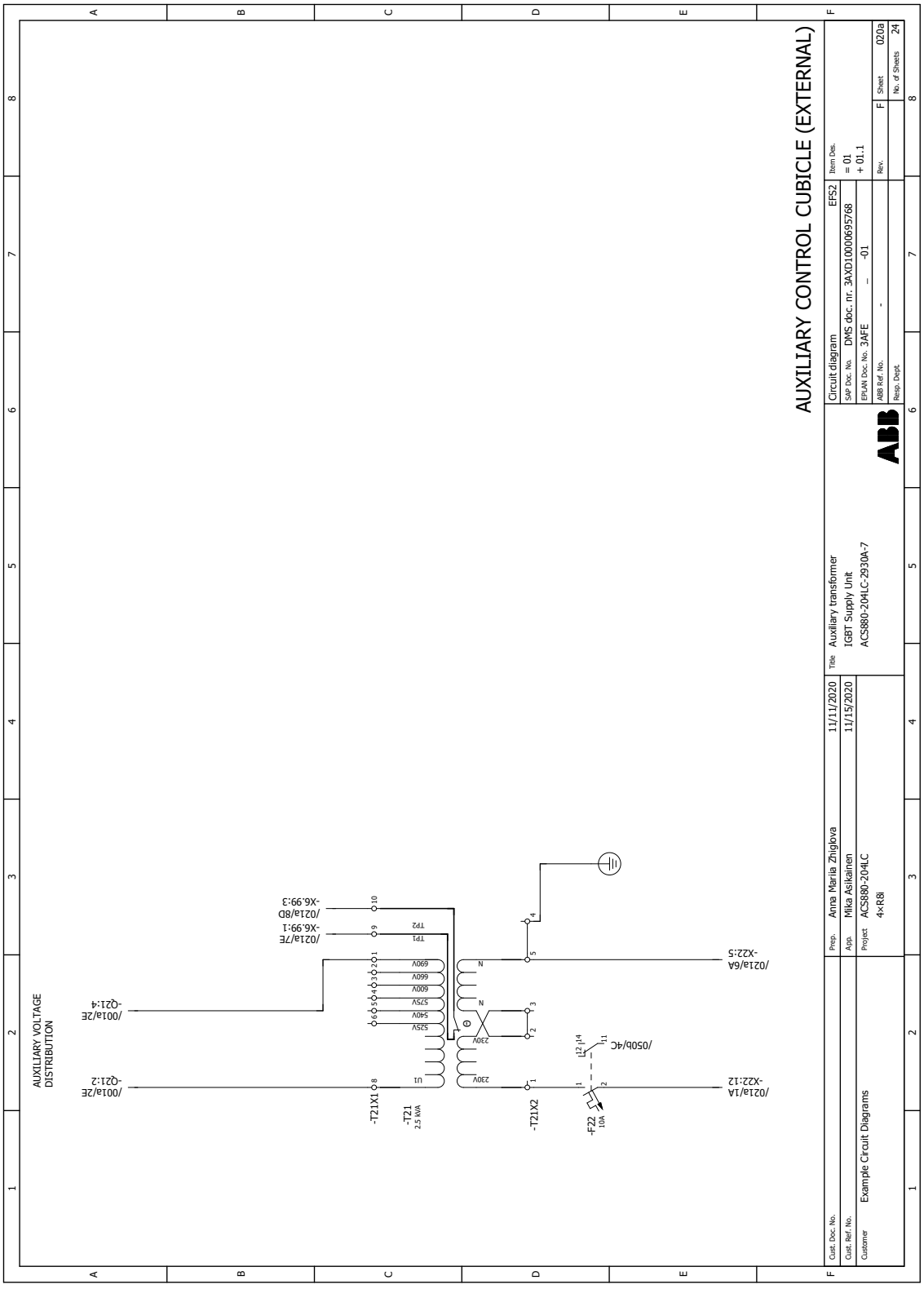
AUXILIARY CONTROL CUBICLE (EXTERNAL)
AUXILIARY VOLTAGE DISTRIBUTION
-T21
2.5 kVA
-T21X1
-T21X2
-F22
10A
-Q21:4
-Q21:2
-X6.99:3
-X6.99:1
-X22:5
-X22:12
/001a/2E
/021a/7E
/021a/8D
/021a/6A
/021a/1A
/050b/4C
Prep. Anna Mariia Zhigiova 11/11/2020
Appr. Mika Asikainen 11/15/2020
Project ACS880-204LC 4×R8i
Customer Example Circuit Diagrams
Title Auxiliary transformer IGBT Supply Unit ACS880-204LC-2930A-7
Circuit diagram EFS2
SAP Doc. No. DMS doc. nr. 3AXD10000695768
EPLAN Doc. No. 3AFE – -01
ABB Ref. No. -
Resp. Dept.
Item Des. = 01 + 01.1
Rev. F Sheet 020a
No. of Sheets 24

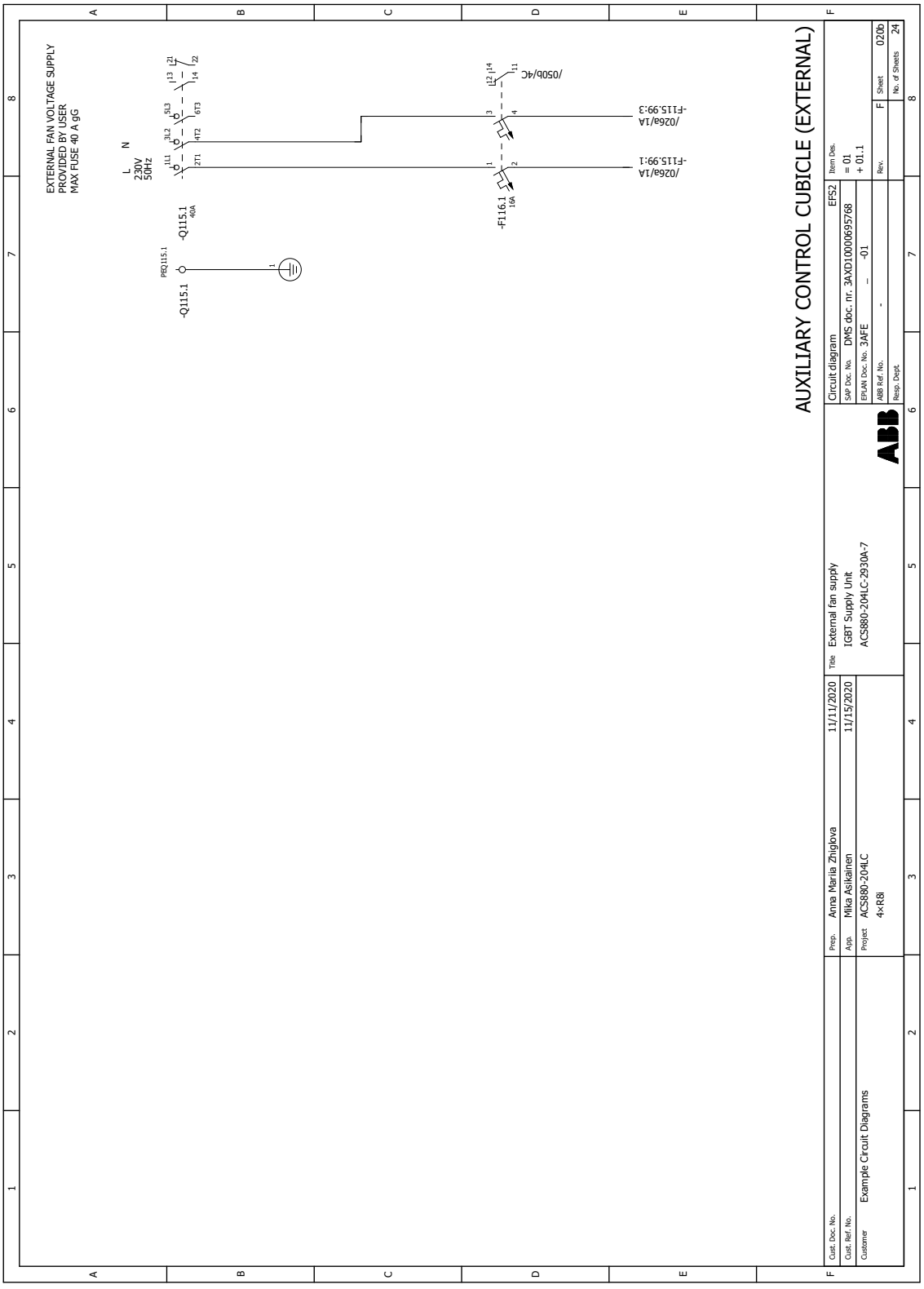
EXTERNAL FAN VOLTAGE SUPPLY
PROVIDED BY USER
MAX FUSE 40 A gG
L N
230V
50HZ
-Q115.1
40A
-Q115.1
PEQ115:1
-F116.1
16A
/026a/1A
-F115.99:1
/026a/1A
-F115.99:3
/050b/4C
AUXILIARY CONTROL CUBICLE (EXTERNAL)
Circuit diagram
EFS2
SAP Doc. No.
DMS doc. nr. 3AXD10000695768
EPLAN Doc. No. 3AFE – -01
ABB Ref. No. -
Resp. Dept.
Item Des.
= 01
+ 01.1
Rev. F
Sheet 020b
No. of Sheets 24
Cust. Doc. No.
Cust. Ref. No.
Customer Example Circuit Diagrams
Prep. Anna Mariia Zhiglova 11/11/2020
Appr. Mika Asikainen 11/15/2020
Project ACS880-204LC 4×R8i
Title External fan supply IGBT Supply Unit ACS880-204LC-2930A-7

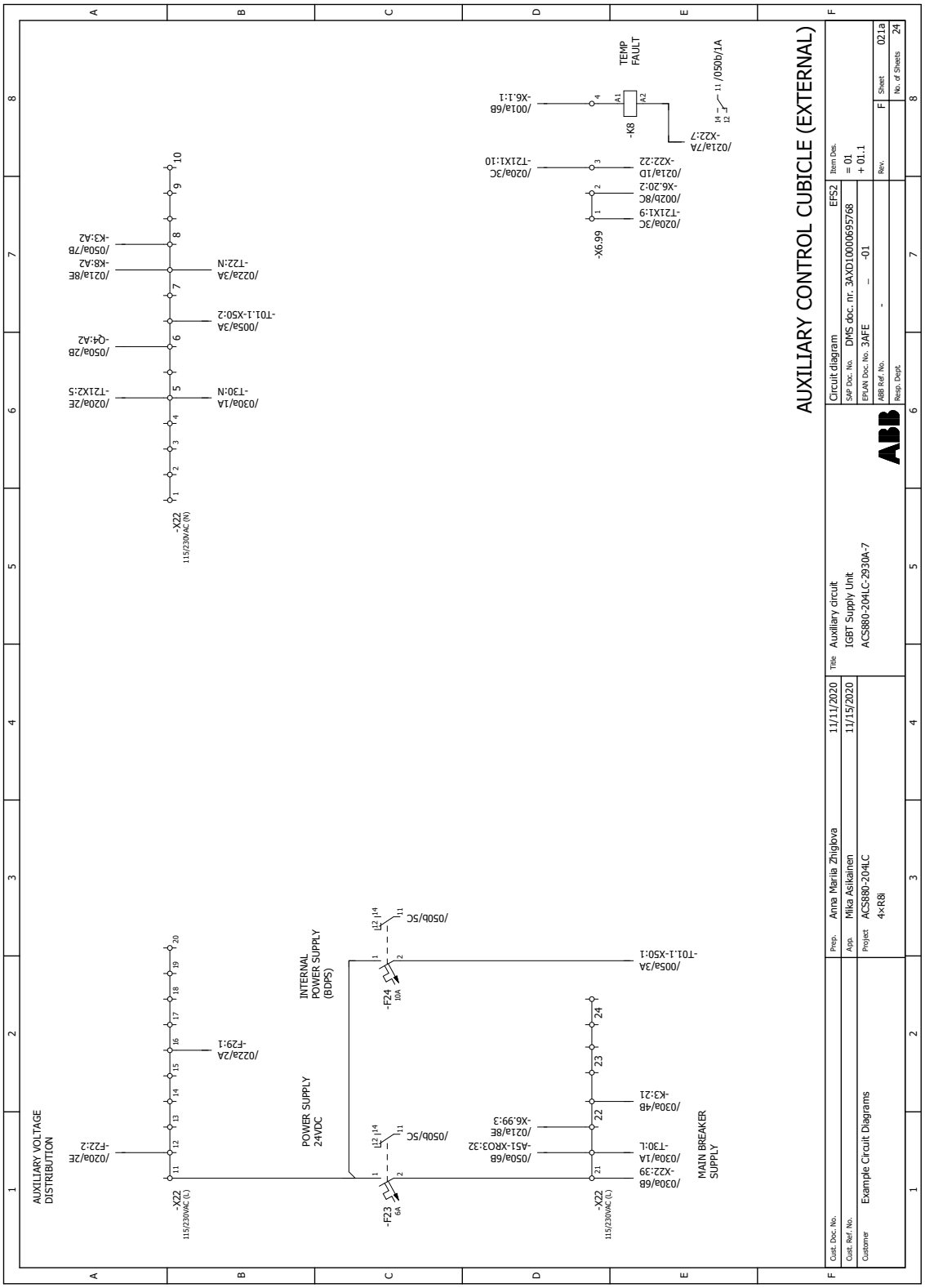
AUXILIARY CONTROL CUBICLE (EXTERNAL)
Circuit diagram
SAP Doc. No. DMS doc. nr. 3AXD10000695768
EPLAN Doc. No. 3AFE _ -01
ABB Ref. No. -
Resp. Dept.
Item Des.
EFS2
= 01
+ 01.1
Rev.
F
Sheet 021a
No. of Sheets 24
Title Auxiliary circuit
IGBT Supply Unit
ACS880-204LC-2930A-7
Prep. Anna Mariia Zhiglova 11/11/2020
App. Mika Asikainen 11/15/2020
Project ACS880-204LC
4×R8i
Cust. Doc. No.
Cust. Ref. No.
Customer Example Circuit Diagrams
AUXILIARY VOLTAGE DISTRIBUTION
POWER SUPPLY 24VDC
INTERNAL POWER SUPPLY (BDPS)
MAIN BREAKER SUPPLY
TEMP FAULT
-X22
115/230VAC (L)
-X22
115/230VAC (N)
-X6.99
-K8
-F23
6A
-F24
10A
-F29:1
-FZ2:2
-K3:21
-X6.1:1
-X22:7
-X22:22
-X22:39
-T30:L
-T30:N
-T1X1:9
-T1X1:10
-T1X2:5
-T1X1:C
-T1X1:D
-X6.20:2
-X6.99:3
-AS1-XRO3:32
-Q4:A2
-K8:A2
-K3:A2
-T22:N
-T01.1-X50:2
-T01.1-X50:1
/020a/2E
/022a/2A
/050a/6B
/021a/8E
/050a/4B
/050a/1A
/050a/5C
/050a/7B
/022a/3A
/005a/3A
/020a/3C
/021a/1D
/002b/8C
/001a/6B
/021a/7A
/050b/1A

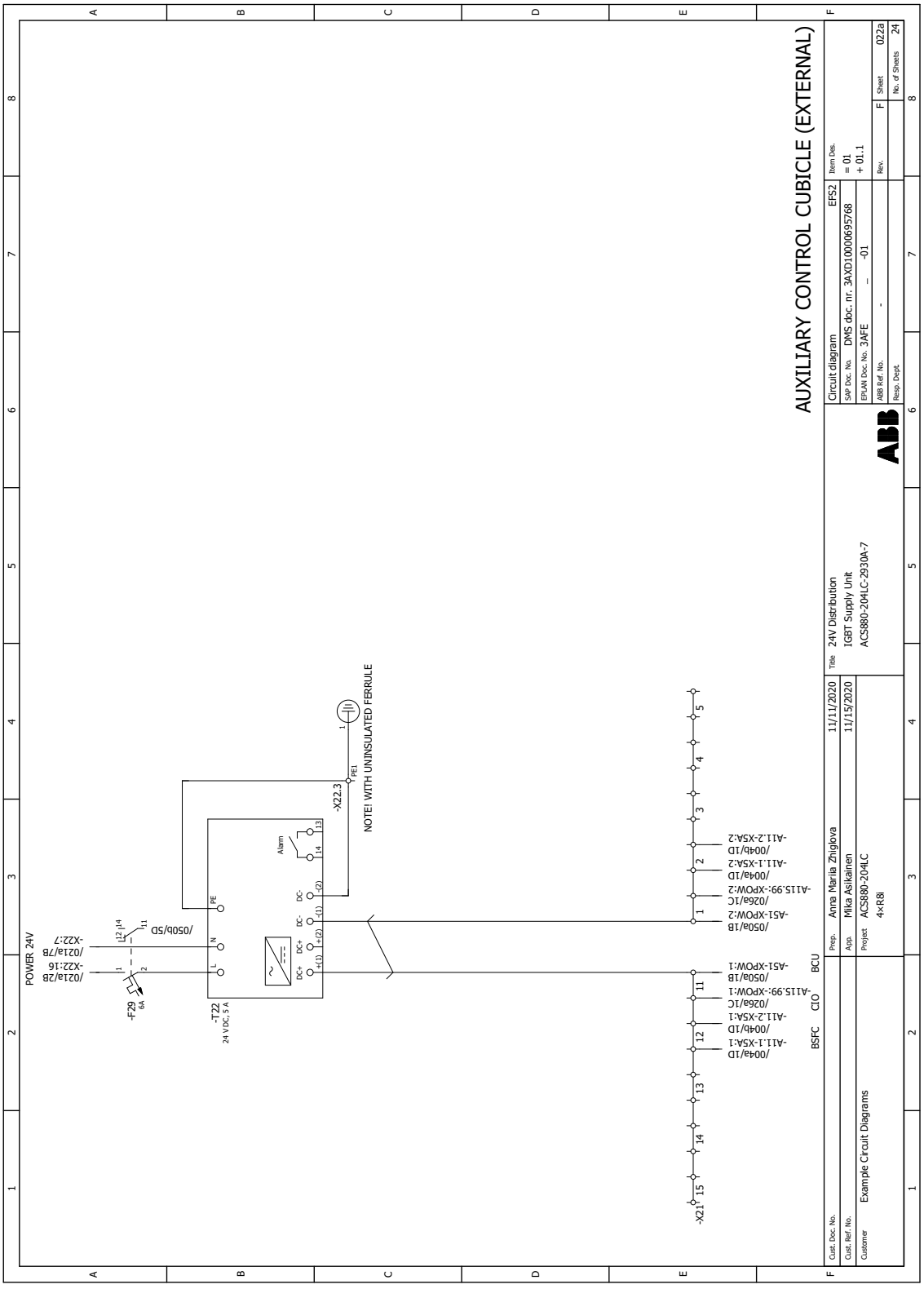
AUXILIARY CONTROL CUBICLE (EXTERNAL)
Circuit diagram
EFS2
Item Des.
= 01
+ 01.1
SAP Doc. No. DMS doc. nr. 3AXD10000695768
EPLAN Doc. No. 3AFE _ -01
ABB Ref. No. -
Rev. F
Sheet 022a
Resp. Dept.
No. of Sheets 24
Title 24V Distribution
IGBT Supply Unit
ACS880-204LC-2930A-7
Prep. Anna Maria Zhiglova 11/11/2020
App. Mika Asikainen 11/15/2020
Project ACS880-204LC
4×R8i
Customer Example Circuit Diagrams
Cust. Doc. No.
Cust. Ref. No.
POWER 24V
-F29
6A
-T22
24 V DC, 5 A
-X22.3
NOTE! WITH UNINSULATED FERRULE
Alarm
-X21
BSFC
CIO
BCU
-A11.2-XSA:2
/004b/1D
-A11.1-XSA:2
/004a/1D
-A115.99:-XPOW:2
/026a/1C
-A51-XPOW:2
/050a/1B
-A51-XPOW:1
/050a/1B
-A115.99:-XPOW:1
/026a/1C
-A11.2-XSA:1
/004b/1D
-A11.1-XSA:1
/004a/1D

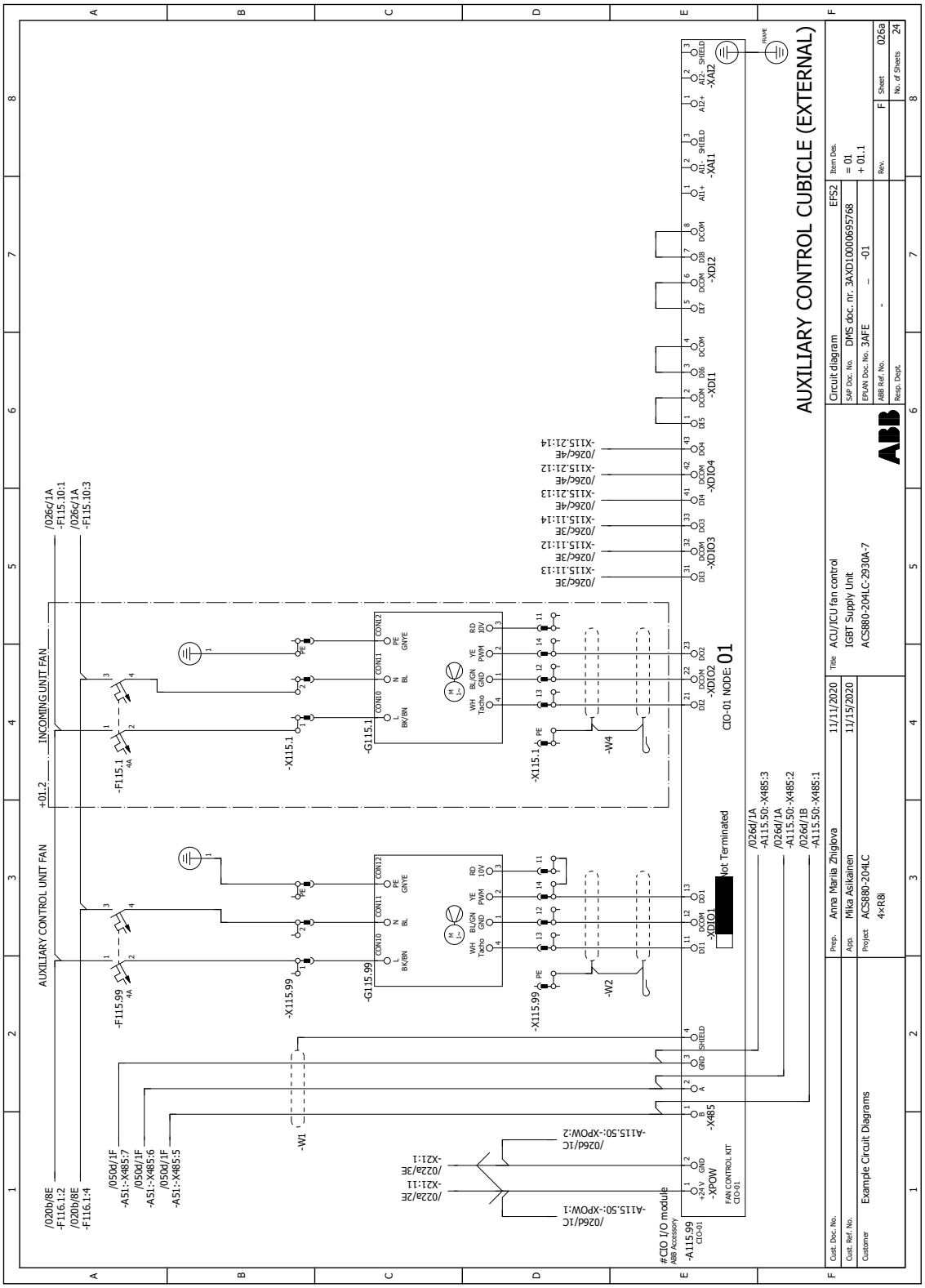
AUXILIARY CONTROL CUBICLE (EXTERNAL)
AUXILIARY CONTROL UNIT FAN
INCOMING UNIT FAN
CIO-01 NODE: 01
Not Terminated
Circuit diagram
EFS2
SAP Doc. No.
DMS doc. nr. 3AXD10000695768
EPLAN Doc. No. 3AFE _ -01
ABB Ref. No. -
Resp. Dept.
Item Des. = 01 + 01.1
Rev.
Sheet 026a
No. of Sheets 24
Title ACU/ICU fan control
IGBT Supply Unit
ACS880-204LC-2930A-7
Prep. Anna Mariia Zhigalova 11/11/2020
Appr. Mika Asikainen 11/15/2020
Project ACS880-204LC 4×R8i
Cust. Doc. No.
Cust. Ref. No.
Customer Example Circuit Diagrams
-XDIO1
-XDIO2
-XDIO3
-XDIO4
-XDI1
-XDI2
-XAI1
-XAI2
-XRO
-XPOW
-X485
-W1
-W2
-W4
-G115.1
-G115.99
-X115.1
-X115.99
-F115.1
-F115.99
-A115.99
-A115.50:-X485:1
-A115.50:-X485:2
-A115.50:-X485:3
-A115.50:-XPOW:1
-A115.50:-XPOW:2
-A51:-X485:5
-A51:-X485:6
-A51:-X485:7
-XZ1:1
-XZ1:11
-XZ1:3E
-XZ1:4E
-XZ1:5
-XZ1:6
-XZ1:7
-XZ1:8
-XZ1:9
-XZ1:10
-XZ1:12
-XZ1:13
-XZ1:14
-XZ1:15
-XZ1:16
-XZ1:17
-XZ1:18
-XZ1:19
-XZ1:20
-XZ1:21
-XZ1:22
-XZ1:23
-XZ1:24
-XZ1:25
-XZ1:26
-XZ1:27
-XZ1:28
-XZ1:29
-XZ1:30
-XZ1:31
-XZ1:32
-XZ1:33
-XZ1:34
-XZ1:35
-XZ1:36
-XZ1:37
-XZ1:38
-XZ1:39
-XZ1:40
-XZ1:41
-XZ1:42
-XZ1:43
-XZ1:44
-XZ1:45
-XZ1:46
-XZ1:47
-XZ1:48
-XZ1:49
-XZ1:50
-XZ1:51
-XZ1:52
-XZ1:53
-XZ1:54
-XZ1:55
-XZ1:56
-XZ1:57
-XZ1:58
-XZ1:59
-XZ1:60
-XZ1:61
-XZ1:62
-XZ1:63
-XZ1:64
-XZ1:65
-XZ1:66
-XZ1:67
-XZ1:68
-XZ1:69
-XZ1:70
-XZ1:71
-XZ1:72
-XZ1:73
-XZ1:74
-XZ1:75
-XZ1:76
-XZ1:77
-XZ1:78
-XZ1:79
-XZ1:80
-XZ1:81
-XZ1:82
-XZ1:83
-XZ1:84
-XZ1:85
-XZ1:86
-XZ1:87
-XZ1:88
-XZ1:89
-XZ1:90
-XZ1:91
-XZ1:92
-XZ1:93
-XZ1:94
-XZ1:95
-XZ1:96
-XZ1:97
-XZ1:98
-XZ1:99
-XZ1:100
-XZ1:101
-XZ1:102
-XZ1:103
-XZ1:104
-XZ1:105
-XZ1:106
-XZ1:107
-XZ1:108
-XZ1:109
-XZ1:110
-XZ1:111
-XZ1:112
-XZ1:113
-XZ1:114
-XZ1:115
-XZ1:116
-XZ1:117
-XZ1:118
-XZ1:119
-XZ1:120
-XZ1:121
-XZ1:122
-XZ1:123
-XZ1:124
-XZ1:125
-XZ1:126
-XZ1:127
-XZ1:128
-XZ1:129
-XZ1:130
-XZ1:131
-XZ1:132
-XZ1:133
-XZ1:134
-XZ1:135
-XZ1:136
-XZ1:137
-XZ1:138
-XZ1:139
-XZ1:140
-XZ1:141
-XZ1:142
-XZ1:143
-XZ1:144
-XZ1:145
-XZ1:146
-XZ1:147
-XZ1:148
-XZ1:149
-XZ1:150
-XZ1:151
-XZ1:152
-XZ1:153
-XZ1:154
-XZ1:155
-XZ1:156
-XZ1:157
-XZ1:158
-XZ1:159
-XZ1:160
-XZ1:161
-XZ1:162
-XZ1:163
-XZ1:164
-XZ1:165
-XZ1:166
-XZ1:167
-XZ1:168
-XZ1:169
-XZ1:170
-XZ1:171
-XZ1:172
-XZ1:173
-XZ1:174
-XZ1:175
-XZ1:176
-XZ1:177
-XZ1:178
-XZ1:179
-XZ1:180
-XZ1:181
-XZ1:182
-XZ1:183
-XZ1:184
-XZ1:185
-XZ1:186
-XZ1:187
-XZ1:188
-XZ1:189
-XZ1:190
-XZ1:191
-XZ1:192
-XZ1:193
-XZ1:194
-XZ1:195
-XZ1:196
-XZ1:197
-XZ1:198
-XZ1:199
-XZ1:200
-XZ1:201
-XZ1:202
-XZ1:203
-XZ1:204
-XZ1:205
-XZ1:206
-XZ1:207
-XZ1:208
-XZ1:209
-XZ1:210
-XZ1:211
-XZ1:212
-XZ1:213
-XZ1:214
-XZ1:215
-XZ1:216
-XZ1:217
-XZ1:218
-XZ1:219
-XZ1:220
-XZ1:221
-XZ1:222
-XZ1:223
-XZ1:224
-XZ1:225
-XZ1:226
-XZ1:227
-XZ1:228
-XZ1:229
-XZ1:230
-XZ1:231
-XZ1:232
-XZ1:233
-XZ1:234
-XZ1:235
-XZ1:236
-XZ1:237
-XZ1:238
-XZ1:239
-XZ1:240
-XZ1:241
-XZ1:242
-XZ1:243
-XZ1:244
-XZ1:245
-XZ1:246
-XZ1:247
-XZ1:248
-XZ1:249
-XZ1:250
-XZ1:251
-XZ1:252
-XZ1:253
-XZ1:254
-XZ1:255
-XZ1:256
-XZ1:257
-XZ1:258
-XZ1:259
-XZ1:260
-XZ1:261
-XZ1:262
-XZ1:263
-XZ1:264
-XZ1:265
-XZ1:266
-XZ1:267
-XZ1:268
-XZ1:269
-XZ1:270
-XZ1:271
-XZ1:272
-XZ1:273
-XZ1:274
-XZ1:275
-XZ1:276
-XZ1:277
-XZ1:278
-XZ1:279
-XZ1:280
-XZ1:281
-XZ1:282
-XZ1:283
-XZ1:284
-XZ1:285
-XZ1:286
-XZ1:287
-XZ1:288
-XZ1:289
-XZ1:290
-XZ1:291
-XZ1:292
-XZ1:293
-XZ1:294
-XZ1:295
-XZ1:296
-XZ1:297
-XZ1:298
-XZ1:299
-XZ1:300
-XZ1:301
-XZ1:302
-XZ1:303
-XZ1:304
-XZ1:305
-XZ1:306
-XZ1:307
-XZ1:308
-XZ1:309
-XZ1:310
-XZ1:311
-XZ1:312
-XZ1:313
-XZ1:314
-XZ1:315
-XZ1:316
-XZ1:317
-XZ1:318
-XZ1:319
-XZ1:320
-XZ1:321
-XZ1:322
-XZ1:323
-XZ1:324
-XZ1:325
-XZ1:326
-XZ1:327
-XZ1:328
-XZ1:329
-XZ1:330
-XZ1:331
-XZ1:332
-XZ1:333
-XZ1:334
-XZ1:335
-XZ1:336
-XZ1:337
-XZ1:338
-XZ1:339
-XZ1:340
-XZ1:341
-XZ1:342
-XZ1:343
-XZ1:344
-XZ1:345
-XZ1:346
-XZ1:347
-XZ1:348
-XZ1:349
-XZ1:350
-XZ1:351
-XZ1:352
-XZ1:353
-XZ1:354
-XZ1:355
-XZ1:356
-XZ1:357
-XZ1:358
-XZ1:359
-XZ1:360
-XZ1:361
-XZ1:362
-XZ1:363
-XZ1:364
-XZ1:365
-XZ1:366
-XZ1:367
-XZ1:368
-XZ1:369
-XZ1:370
-XZ1:371
-XZ1:372
-XZ1:373
-XZ1:374
-XZ1:375
-XZ1:376
-XZ1:377
-XZ1:378
-XZ1:379
-XZ1:380
-XZ1:381
-XZ1:382
-XZ1:383
-XZ1:384
-XZ1:385
-XZ1:386
-XZ1:387
-XZ1:388
-XZ1:389
-XZ1:390
-XZ1:391
-XZ1:392
-XZ1:393
-XZ1:394
-XZ1:395
-XZ1:396
-XZ1:397
-XZ1:398
-XZ1:399
-XZ1:400
-XZ1:401
-XZ1:402
-XZ1:403
-XZ1:404
-XZ1:405
-XZ1:406
-XZ1:407
-XZ1:408
-XZ1:409
-XZ1:410
-XZ1:411
-XZ1:412
-XZ1:413
-XZ1:414
-XZ1:415
-XZ1:416
-XZ1:417
-XZ1:418
-XZ1:419
-XZ1:420
-XZ1:421
-XZ1:422
-XZ1:423
-XZ1:424
-XZ1:425
-XZ1:426
-XZ1:427
-XZ1:428
-XZ1:429
-XZ1:430
-XZ1:431
-XZ1:432
-XZ1:433
-XZ1:434
-XZ1:435
-XZ1:436
-XZ1:437
-XZ1:438
-XZ1:439
-XZ1:440
-XZ1:441
-XZ1:442
-XZ1:443
-XZ1:444
-XZ1:445
-XZ1:446
-XZ1:447
-XZ1:448
-XZ1:449
-XZ1:450
-XZ1:451
-XZ1:452
-XZ1:453
-XZ1:454
-XZ1:455
-XZ1:456
-XZ1:457
-XZ1:458
-XZ1:459
-XZ1:460
-XZ1:461
-XZ1:462
-XZ1:463
-XZ1:464
-XZ1:465
-XZ1:466
-XZ1:467
-XZ1:468
-XZ1:469
-XZ1:470
-XZ1:471
-XZ1:472
-XZ1:473
-XZ1:474
-XZ1:475
-XZ1:476
-XZ1:477
-XZ1:478
-XZ1:479
-XZ1:480
-XZ1:481
-XZ1:482
-XZ1:483
-XZ1:484
-XZ1:485
-XZ1:486
-XZ1:487
-XZ1:488
-XZ1:489
-XZ1:490
-XZ1:491
-XZ1:492
-XZ1:493
-XZ1:494
-XZ1:495
-XZ1:496
-XZ1:497
-XZ1:498
-XZ1:499
-XZ1:500
-XZ1:501
-XZ1:502
-XZ1:503
-XZ1:504
-XZ1:505
-XZ1:506
-XZ1:507
-XZ1:508
-XZ1:509
-XZ1:510
-XZ1:511
-XZ1:512
-XZ1:513
-XZ1:514
-XZ1:515
-XZ1:516
-XZ1:517
-XZ1:518
-XZ1:519
-XZ1:520
-XZ1:521
-XZ1:522
-XZ1:523
-XZ1:524
-XZ1:525
-XZ1:526
-XZ1:527
-XZ1:528
-XZ1:529
-XZ1:530
-XZ1:531
-XZ1:532
-XZ1:533
-XZ1:534
-XZ1:535
-XZ1:536
-XZ1:537
-XZ1:538
-XZ1:539
-XZ1:540
-XZ1:541
-XZ1:542
-XZ1:543
-XZ1:544
-XZ1:545
-XZ1:546
-XZ1:547
-XZ1:548
-XZ1:549
-XZ1:550
-XZ1:551
-XZ1:552
-XZ1:553
-XZ1:554
-XZ1:555
-XZ1:556
-XZ1:557
-XZ1:558
-XZ1:559
-XZ1:560
-XZ1:561
-XZ1:562
-XZ1:563
-XZ1:564
-XZ1:565
-XZ1:566
-XZ1:567
-XZ1:568
-XZ1:569
-XZ1:570
-XZ1:571
-XZ1:572
-XZ1:573
-XZ1:574
-XZ1:575
-XZ1:576
-XZ1:577
-XZ1:578
-XZ1:579
-XZ1:580
-XZ1:581
-XZ1:582
-XZ1:583
-XZ1:584
-XZ1:585
-XZ1:586
-XZ1:587
-XZ1:588
-XZ1:589
-XZ1:590
-XZ1:591
-XZ1:592
-XZ1:593
-XZ1:594
-XZ1:595
-XZ1:596
-XZ1:597
-XZ1:598
-XZ1:599
-XZ1:600
-XZ1:601
-XZ1:602
-XZ1:603
-XZ1:604
-XZ1:605
-XZ1:606
-XZ1:607
-XZ1:608
-XZ1:609
-XZ1:610
-XZ1:611
-XZ1:612
-XZ1:613
-XZ1:614
-XZ1:615
-XZ1:616
-XZ1:617
-XZ1:618
-XZ1:619
-XZ1:620
-XZ1:621
-XZ1:622
-XZ1:623
-XZ1:624
-XZ1:625
-XZ1:626
-XZ1:627
-XZ1:628
-XZ1:629
-XZ1:630
-XZ1:631
-XZ1:632
-XZ1:633
-XZ1:634
-XZ1:635
-XZ1:636
-XZ1:637
-XZ1:638
-XZ1:639
-XZ1:640
-XZ1:641
-XZ1:642
-XZ1:643
-XZ1:644
-XZ1:645
-XZ1:646
-XZ1:647
-XZ1:648
-XZ1:649
-XZ1:650
-XZ1:651
-XZ1:652
-XZ1:653
-XZ1:654
-XZ1:655
-XZ1:656
-XZ1:657
-XZ1:658
-XZ1:659
-XZ1:660
-XZ1:661
-XZ1:662
-XZ1:663
-XZ1:664
-XZ1:665
-XZ1:666
-XZ1:667
-XZ1:668
-XZ1:669
-XZ1:670
-XZ1:671
-XZ1:672
-XZ1:673
-XZ1:674
-XZ1:675
-XZ1:676
-XZ1:677
-XZ1:678
-XZ1:679
-XZ1:680
-XZ1:681
-XZ1:682
-XZ1:683
-XZ1:684
-XZ1:685
-XZ1:686
-XZ1:687
-XZ1:688
-XZ1:689
-XZ1:690
-XZ1:691
-XZ1:692
-XZ1:693
-XZ1:694
-XZ1:695
-XZ1:696
-XZ1:697
-XZ1:698
-XZ1:699
-XZ1:700
-XZ1:701
-XZ1:702
-XZ1:703
-XZ1:704
-XZ1:705
-XZ1:706
-XZ1:707
-XZ1:708
-XZ1:709
-XZ1:710
-XZ1:711
-XZ1:712
-XZ1:713
-XZ1:714
-XZ1:715
-XZ1:716
-XZ1:717
-XZ1:718
-XZ1:719
-XZ1:720
-XZ1:721
-XZ1:722
-XZ1:723
-XZ1:724
-XZ1:725
-XZ1:726
-XZ1:727
-XZ1:728
-XZ1:729
-XZ1:730
-XZ1:731
-XZ1:732
-XZ1:733
-XZ1:734
-XZ1:735
-XZ1:736
-XZ1:737
-XZ1:738
-XZ1:739
-XZ1:740
-XZ1:741
-XZ1:742
-XZ1:743
-XZ1:744
-XZ1:745
-XZ1:746
-XZ1:747
-XZ1:748
-XZ1:749
-XZ1:750
-XZ1:751
-XZ1:752
-XZ1:753
-XZ1:754
-XZ1:755
-XZ1:756
-XZ1:757
-XZ1:758
-XZ1:759
-XZ1:760
-XZ1:761
-XZ1:762
-XZ1:763
-XZ1:764
-XZ1:765
-XZ1:766
-XZ1:767
-XZ1:768
-XZ1:769
-XZ1:770
-XZ1:771
-XZ1:772
-XZ1:773
-XZ1:774
-XZ1:775
-XZ1:776
-XZ1:777
-XZ1:778
-XZ1:779
-XZ1:780
-XZ1:781
-XZ1:782
-XZ1:783
-XZ1:784
-XZ1:785
-XZ1:786
-XZ1:787
-XZ1:788
-XZ1:789
-XZ1:790
-XZ1:791
-XZ1:792
-XZ1:793
-XZ1:794
-XZ1:795
-XZ1:796
-XZ1:797
-XZ1:798
-XZ1:799
-XZ1:800
-XZ1:801
-XZ1:802
-XZ1:803
-XZ1:804
-XZ1:805
-XZ1:806
-XZ1:807
-XZ1:808
-XZ1:809
-XZ1:810
-XZ1:811
-XZ1:812
-XZ1:813
-XZ1:814
-XZ1:815
-XZ1:816
-XZ1:817
-XZ1:818
-XZ1:819
-XZ1:820
-XZ1:821
-XZ1:822
-XZ1:823
-XZ1:824
-XZ1:825
-XZ1:826
-XZ1:827
-XZ1:828
-XZ1:829
-XZ1:830
-XZ1:831
-XZ1:832
-XZ1:833
-XZ1:834
-XZ1:835
-XZ1:836
-XZ1:837
-XZ1:838
-XZ1:839
-XZ1:840
-XZ1:841
-XZ1:842
-XZ1:843
-XZ1:844
-XZ1:845
-XZ1:846
-XZ1:847
-XZ1:848
-XZ1:849
-XZ1:850
-XZ1:851
-XZ1:852
-XZ1:853
-XZ1:854
-XZ1:855
-XZ1:856
-XZ1:857
-XZ1:858
-XZ1:859
-XZ1:860
-XZ1:861
-XZ1:862
-XZ1:863
-XZ1:864
-XZ1:865
-XZ1:866
-XZ1:867
-XZ1:868
-XZ1:869
-XZ1:870
-XZ1:871
-XZ1:872
-XZ1:873
-XZ1:874
-XZ1:875
-XZ1:876
-XZ1:877
-XZ1:878
-XZ1:879
-XZ1:880
-XZ1:881
-XZ1:882
-XZ1:883
-XZ1:884
-XZ1:885
-XZ1:886
-XZ1:887
-XZ1:888
-XZ1:889
-XZ1:890
-XZ1:891
-XZ1:892
-XZ1:893
-XZ1:894
-XZ1:895
-XZ1:896
-XZ1:897
-XZ1:898
-XZ1:899
-XZ1:900
-XZ1:901
-XZ1:902
-XZ1:903
-XZ1:904
-XZ1:905
-XZ1:906
-XZ1:907
-XZ1:908
-XZ1:909
-XZ1:910
-XZ1:911
-XZ1:912
-XZ1:913
-XZ1:914
-XZ1:915
-XZ1:916
-XZ1:917
-XZ1:918
-XZ1:919
-XZ1:920
-XZ1:921
-XZ1:922
-XZ1:923
-XZ1:924
-XZ1:925
-XZ1:926
-XZ1:927
-XZ1:928
-XZ1:929
-XZ1:930
-XZ1:931
-XZ1:932
-XZ1:933
-XZ1:934
-XZ1:935
-XZ1:936
-XZ1:937
-XZ1:938
-XZ1:939
-XZ1:940
-XZ1:941
-XZ1:942
-XZ1:943
-XZ1:944
-XZ1:945
-XZ1:946
-XZ1:947
-XZ1:948
-XZ1:949
-XZ1:950
-XZ1:951
-XZ1:952
-XZ1:953
-XZ1:954
-XZ1:955
-XZ1:956
-XZ1:957
-XZ1:958
-XZ1:959
-XZ1:960
-XZ1:961
-XZ1:962
-XZ1:963
-XZ1:964
-XZ1:965
-XZ1:966
-XZ1:967
-XZ1:968
-XZ1:969
-XZ1:970
-XZ1:971
-XZ1:972
-XZ1:973
-XZ1:974
-XZ1:975
-XZ1:976
-XZ1:977
-XZ1:978
-XZ1:979
-XZ1:980
-XZ1:981
-XZ1:982
-XZ1:983
-XZ1:984
-XZ1:985
-XZ1:986
-XZ1:987
-XZ1:988
-XZ1:989
-XZ1:990
-XZ1:991
-XZ1:992
-XZ1:993
-XZ1:994
-XZ1:995
-XZ1:996
-XZ1:997
-XZ1:998
-XZ1:999
-XZ1:1000

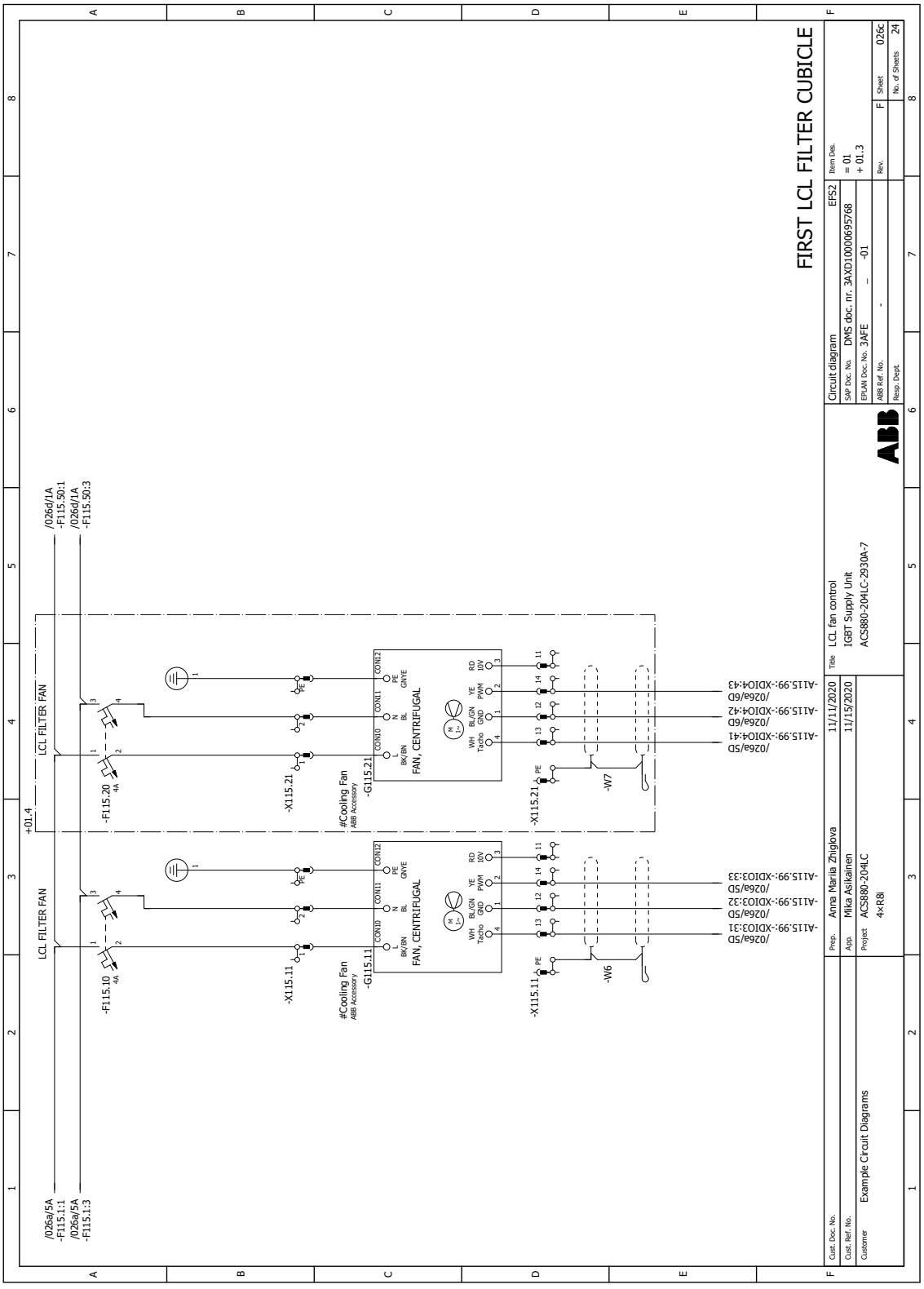
FIRST LCL FILTER CUBICLE
LCL FILTER FAN
LCL FILTER FAN
+01.4
/026d/1A
-F115.50:1
/026d/1A
-F115.50:3
/026a/5A
-F115.1:1
/026a/5A
-F115.1:3
-F115.20
4A
-F115.10
4A
-X115.21
-X115.11
#Cooling Fan
ABB Accessory
-G115.21
-G115.11
FAN, CENTRIFUGAL
-X115.21
-X115.11
-W7
-W6
-A1S.99:-XIO4:43
-A1S.99:-XIO4:42
-A1S.99:-XIO4:41
-A1S.99:-XIO3:33
-A1S.99:-XIO3:32
-A1S.99:-XIO3:31
/026a/5D
/026a/6D
Cust. Doc. No.
Cust. Ref. No.
Customer
Example Circuit Diagrams
Prep.
Anna Mariia Zhiglova
11/11/2020
Appr.
Mika Asikainen
11/15/2020
Project
ACS880-204LC
4×R8i
Title
LCL fan control
IGBT Supply Unit
ACS880-204LC-2930A-7
Circuit diagram
EFS2
SAP Doc. No.
DMS doc. nr. 3AXD10000695768
EPLAN Doc. No.
3AFE
–
-01
ABB Ref. No.
-
Resp. Dept.
Item Des.
= 01
+ 01.3
Rev.
F
Sheet
026c
No. of Sheets
24

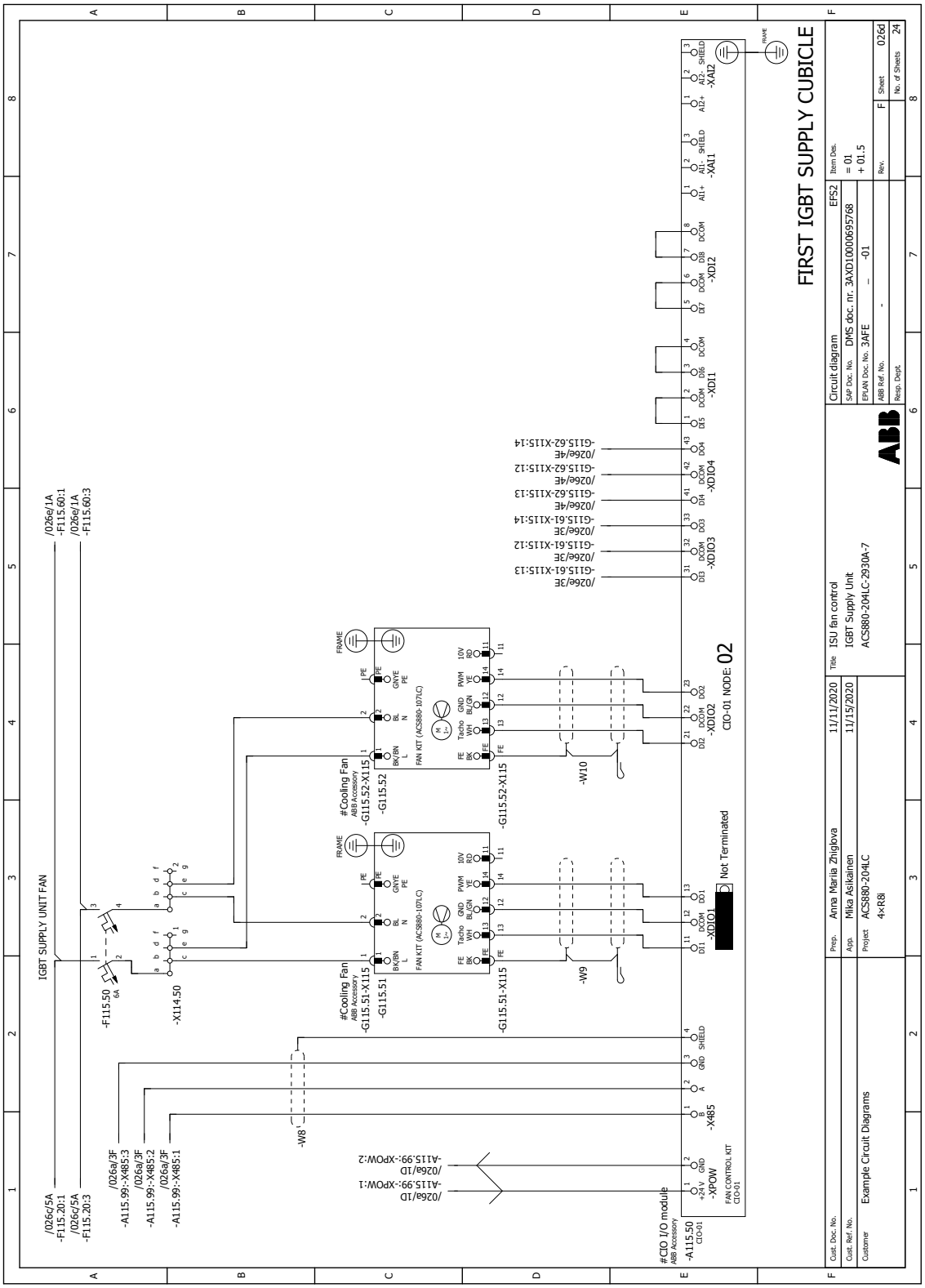
FIRST IGBT SUPPLY CUBICLE
IGBT SUPPLY UNIT FAN
CIO-01 NODE: 02
Not Terminated
Circuit diagram
DMS doc. nr. 3AXD10000695768
3AFE
ISU fan control
IGBT Supply Unit
ACS880-204LC-2930A-7
Prep. Anna Mariia Zhiglova 11/11/2020
App. Mika Asikainen 11/15/2020
Project ACS880-204LC
4×R8i
Example Circuit Diagrams
Sheet 026d
No. of Sheets 24

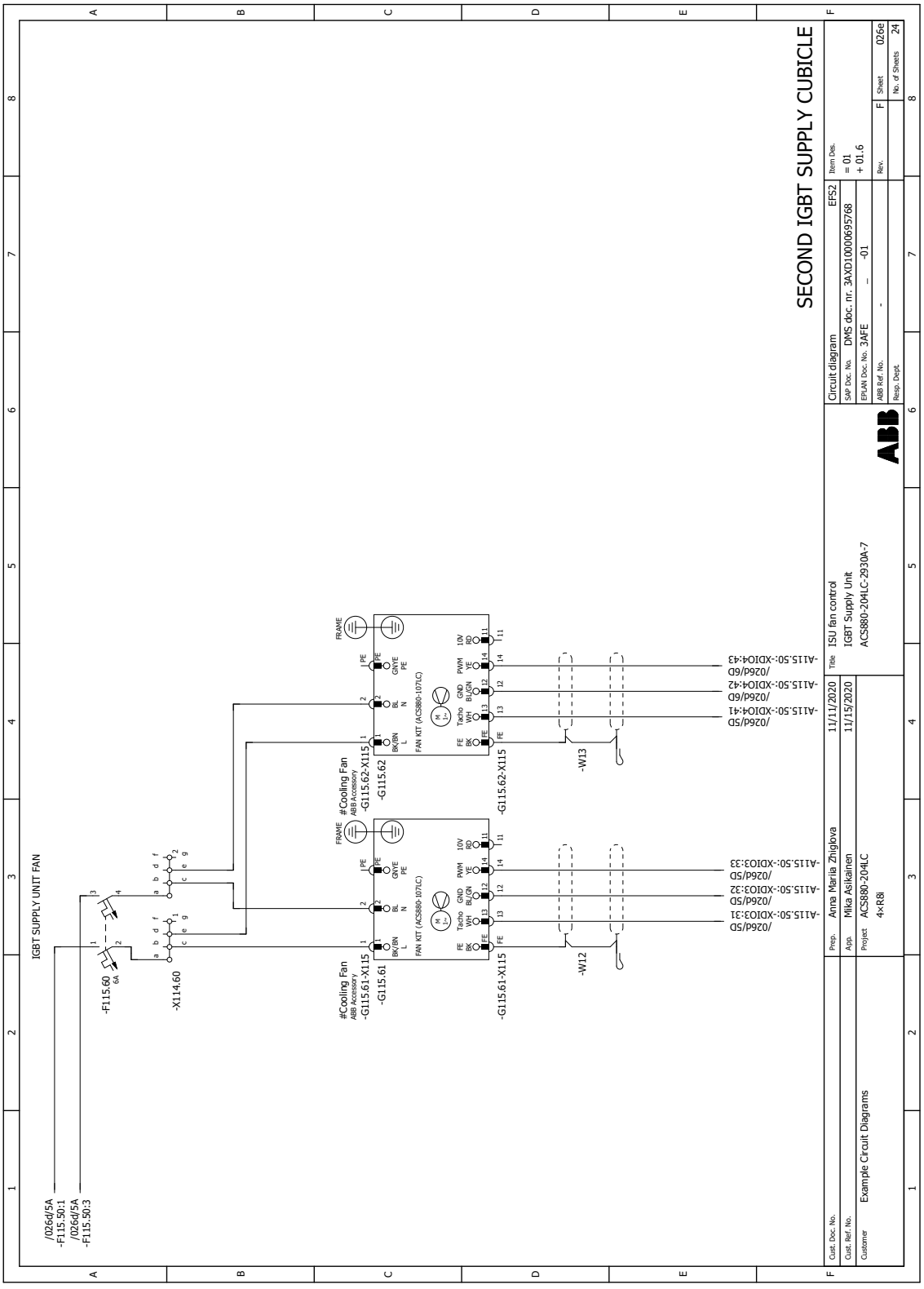
SECOND IGBT SUPPLY CUBICLE
IGBT SUPPLY UNIT FAN
/026d/5A
-F115.50:1
/026d/5A
-F115.50:3
-F115.60
6A
-X114.60
#Cooling Fan
ABB Accessory
-G115.61-X115
-G115.61
-G115.61-X115
-G115.62-X115
-G115.62
-G115.62-X115
FAN KIT (ACS880-107LC)
FRAME
-W12
-W13
-A115.50:-XDIO3:31
/026d/5D
-A115.50:-XDIO3:32
/026d/5D
-A115.50:-XDIO3:33
/026d/5D
-A115.50:-XDIO4:41
/026d/5D
-A115.50:-XDIO4:42
/026d/6D
-A115.50:-XDIO4:43
Prep. Anna Maria Zhiglova 11/11/2020
Appr. Mika Asikainen 11/15/2020
Project ACS880-204LC
4×R8i
Title ISU fan control
IGBT Supply Unit
ACS880-204LC-2930A-7
Circuit diagram EFS2
SAP Doc. No. DMS doc. nr. 3AXD10000695768
EPLAN Doc. No. 3AFE _ -01
ABB Ref. No. -
Resp. Dept.
Item Des.
= 01
+ 01.6
Rev. F
Sheet 026e
No. of Sheets 24
Cust. Doc. No.
Cust. Ref. No.
Customer Example Circuit Diagrams

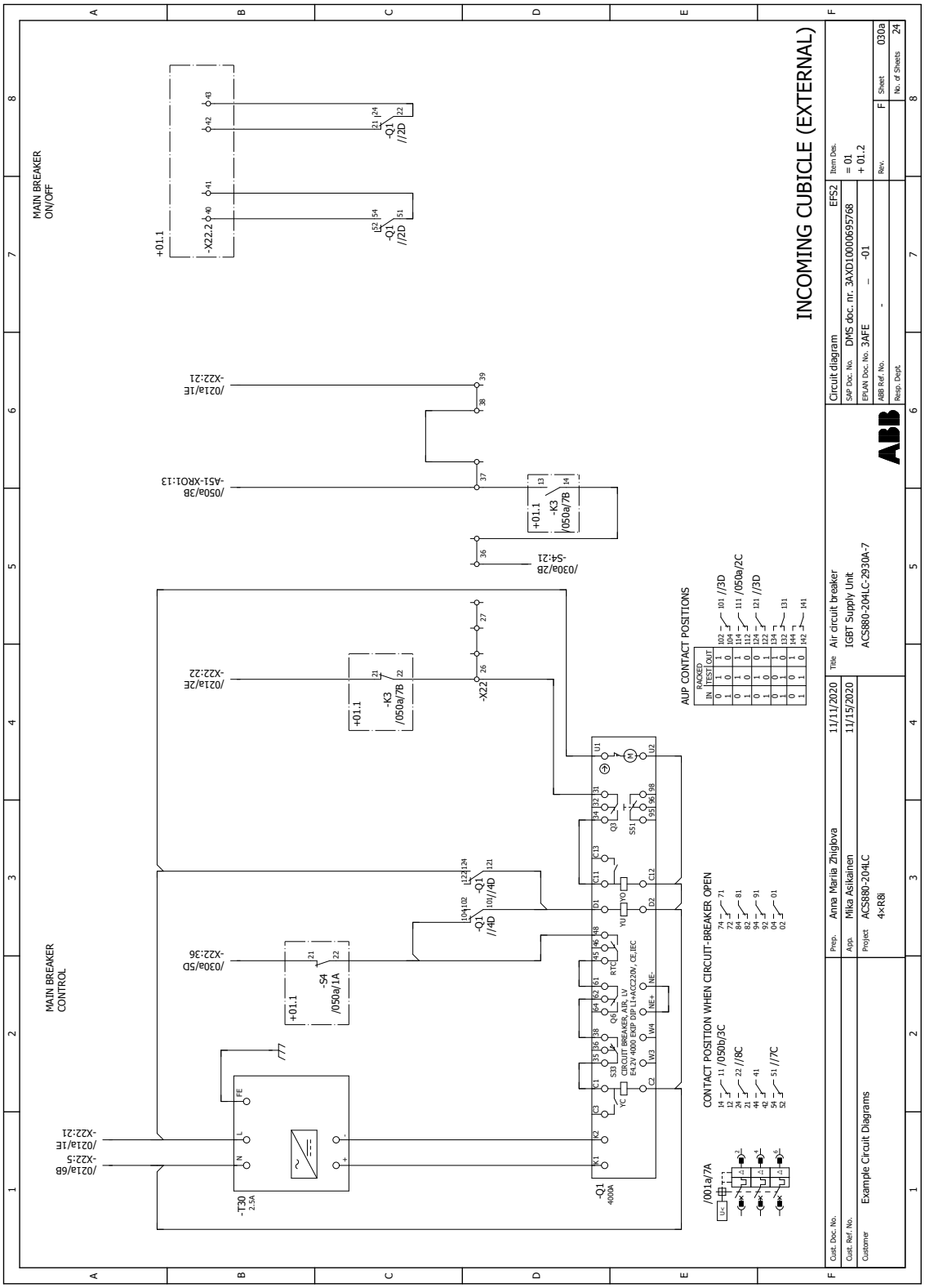
INCOMING CUBICLE (EXTERNAL)
MAIN BREAKER ON/OFF
MAIN BREAKER CONTROL
AUP CONTACT POSITIONS
CONTACT POSITION WHEN CIRCUIT-BREAKER OPEN
Circuit diagram
Air circuit breaker
IGBT Supply Unit
ACS880-204LC-2930A-7
Example Circuit Diagrams
Anna Mariia Zhiglova
Mika Asikainen
ACS880-204LC
4×R8i
11/11/2020
11/15/2020
030a
24

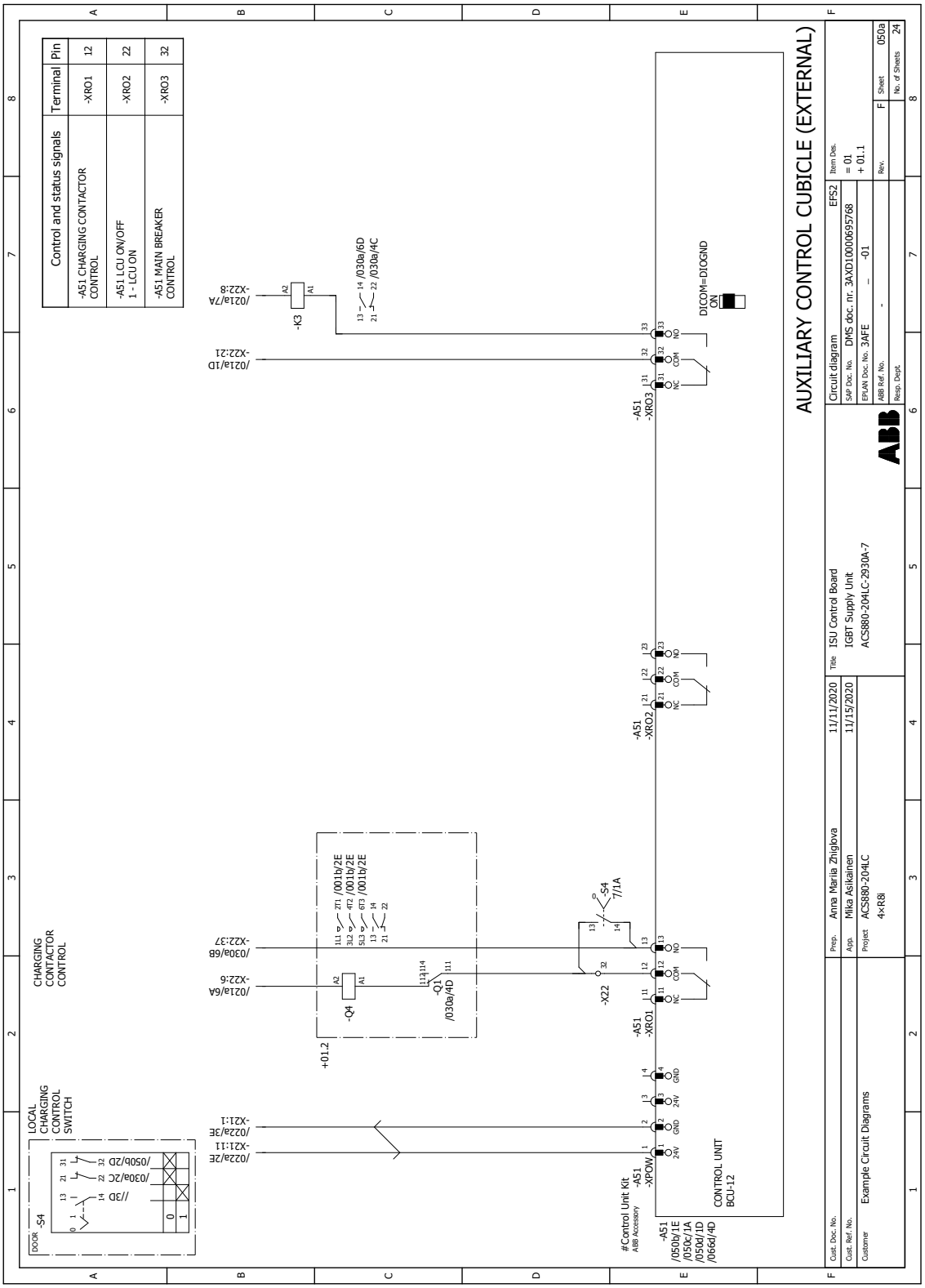
AUXILIARY CONTROL CUBICLE (EXTERNAL)
Control and status signals
Terminal
Pin
-A51 CHARGING CONTACTOR CONTROL
-XRO1
12
-A51 LCU ON/OFF 1 - LCU ON
-XRO2
22
-A51 MAIN BREAKER CONTROL
-XRO3
32
CHARGING CONTACTOR CONTROL
LOCAL CHARGING CONTROL SWITCH
DOOR
-S4
/030a/2C
/050b/2D
//3D
/022a/3E
-X21:1
/022a/2E
-X21:11
/021a/6A
-X22:6
/030a/6B
-X22:37
/021a/1D
-X22:21
/021a/7A
-X22:8
-Q4
-Q1
/030a/4D
+01.2
-X22
-S4
7/1A
-K3
/030a/6D
/030a/4C
-A51
-XPOW
-A51
-XRO1
-A51
-XRO2
-A51
-XRO3
DICOM=DIOGND
ON
CONTROL UNIT
BCU-12
#Control Unit Kit
ABB Accessory
-A51
/050b/1E
/050c/1A
/050d/1D
/066d/4D
Prep.
Anna Maria Zhiglova
11/11/2020
Title
ISU Control Board
IGBT Supply Unit
ACS880-204LC-2930A-7
Appr.
Mika Asikainen
11/15/2020
Project
ACS880-204LC
4×R8i
Customer
Example Circuit Diagrams
Cust. Doc. No.
Cust. Ref. No.
Item Des.
= 01
+ 01.1
Circuit diagram
EFS2
SAP Doc. No.
DMS doc. nr. 3AXD10000695768
EPLAN Doc. No.
3AFE
-01
ABB Ref. No.
Resp. Dept.
Rev.
F
Sheet
050a
No. of Sheets
24

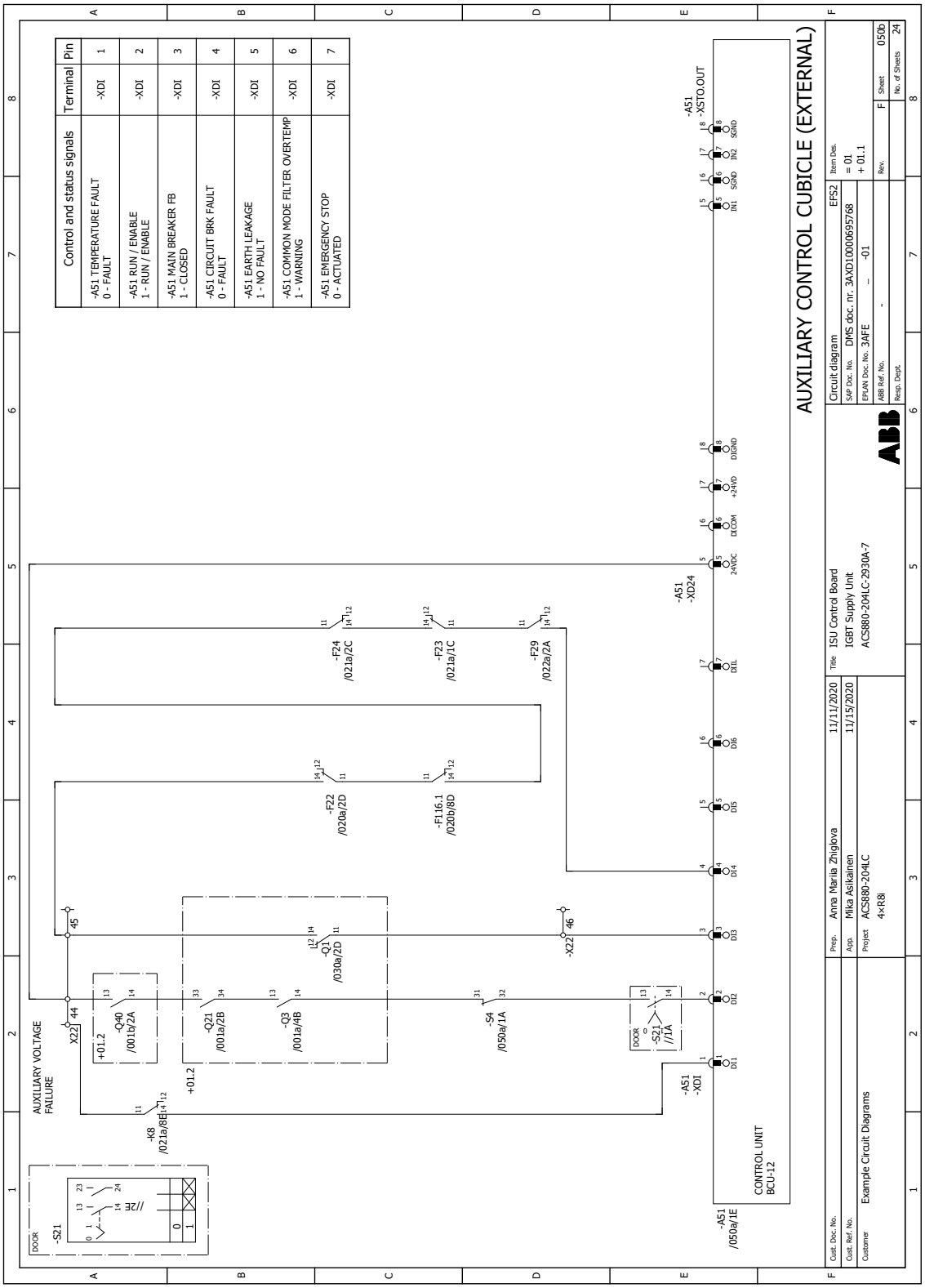
AUXILIARY CONTROL CUBICLE (EXTERNAL)
Control and status signals
Terminal
Pin
-A51 TEMPERATURE FAULT 0 - FAULT
-A51 RUN / ENABLE 1 - RUN / ENABLE
-A51 MAIN BREAKER FB 1 - CLOSED
-A51 CIRCUIT BRK FAULT 0 - FAULT
-A51 EARTH LEAKAGE 1 - NO FAULT
-A51 COMMON MODE FILTER OVERTEMP 1 - WARNING
-A51 EMERGENCY STOP 0 - ACTUATED
-XDI
AUXILIARY VOLTAGE FAILURE
CONTROL UNIT BCU-12
-A51 /050a/1E
-A51 -XDI
-A51 -XD24
-A51 -XSTO.OUT
-S21 DOOR
-K8 /021a/8E
+01.2
-Q40 /001b/2A
-Q21 /001a/2B
-Q3 /001a/4B
-Q1 /030a/2D
-S4 /050a/1A
-S21 //1A
-X22
-F24 /021a/2C
-F23 /021a/1C
-F29 /022a/2A
-F22 /020a/2D
-F116.1 /020b/8D
Cust. Doc. No.
Cust. Ref. No.
Customer
Example Circuit Diagrams
Prep.
Anna Mariia Zhigiova
11/11/2020
Appr.
Mika Asikainen
11/15/2020
Project
ACS880-204LC 4×R8i
Title
ISU Control Board
IGBT Supply Unit
ACS880-204LC-2930A-7
Circuit diagram
EFS2
SAP Doc. No.
DMS doc. nr. 3AXD10000695768
EPLAN Doc. No.
3AFE – -01
ABB Ref. No.
-
Resp. Dept.
Item Des.
= 01
+ 01.1
Rev.
F
Sheet
050b
No. of Sheets
24

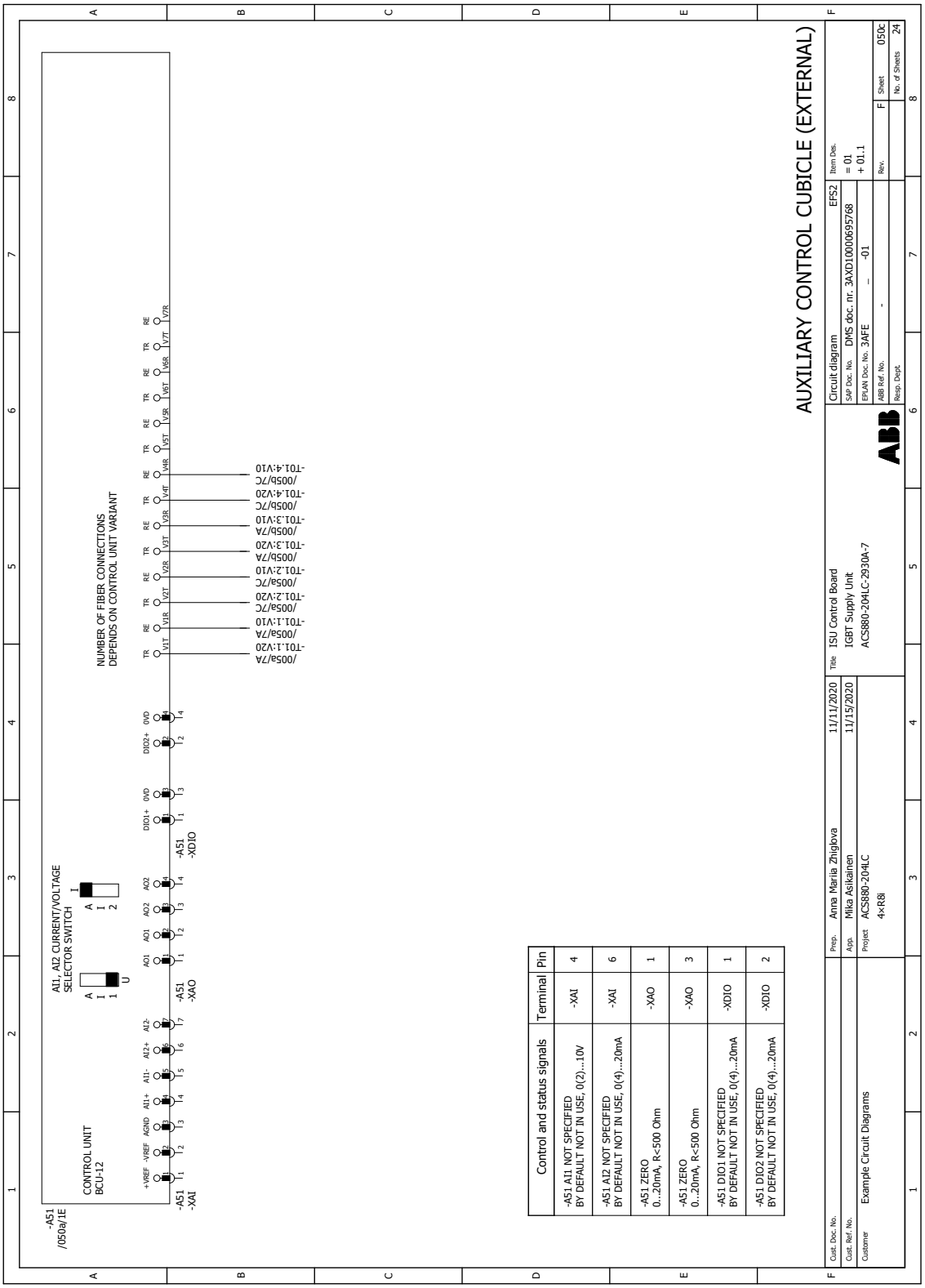
AUXILIARY CONTROL CUBICLE (EXTERNAL)
-A51
/050a/1E
CONTROL UNIT
BCU-12
AI1, AI2 CURRENT/VOLTAGE
SELECTOR SWITCH
NUMBER OF FIBER CONNECTIONS
DEPENDS ON CONTROL UNIT VARIANT
-A51
-XAI
-A51
-XAO
-A51
-XDIO
Control and status signals
Terminal
Pin
-A51 AI1 NOT SPECIFIED
BY DEFAULT NOT IN USE, 0(2)...10V
-XAI
4
-A51 AI2 NOT SPECIFIED
BY DEFAULT NOT IN USE, 0(4)...20mA
-XAI
6
-A51 ZERO
0...20mA, R<500 Ohm
-XAO
1
-A51 ZERO
0...20mA, R<500 Ohm
-XAO
3
-A51 DIO1 NOT SPECIFIED
BY DEFAULT NOT IN USE, 0(4)...20mA
-XDIO
1
-A51 DIO2 NOT SPECIFIED
BY DEFAULT NOT IN USE, 0(4)...20mA
-XDIO
2
Cust. Doc. No.
Cust. Ref. No.
Customer
Example Circuit Diagrams
Prep.
Anna Mariia Zhiglova
11/11/2020
Appr.
Mika Asikainen
11/15/2020
Project
ACS880-204LC
4×R8i
Title
ISU Control Board
IGBT Supply Unit
ACS880-204LC-2930A-7
Circuit diagram
EFS2
SAP Doc. No.
DMS doc. nr. 3AXD10000695768
EPLAN Doc. No.
3AFE
–
-01
ABB Ref. No.
-
Resp. Dept.
Item Des.
= 01
+ 01.1
Rev.
F
Sheet
050c
No. of Sheets
24

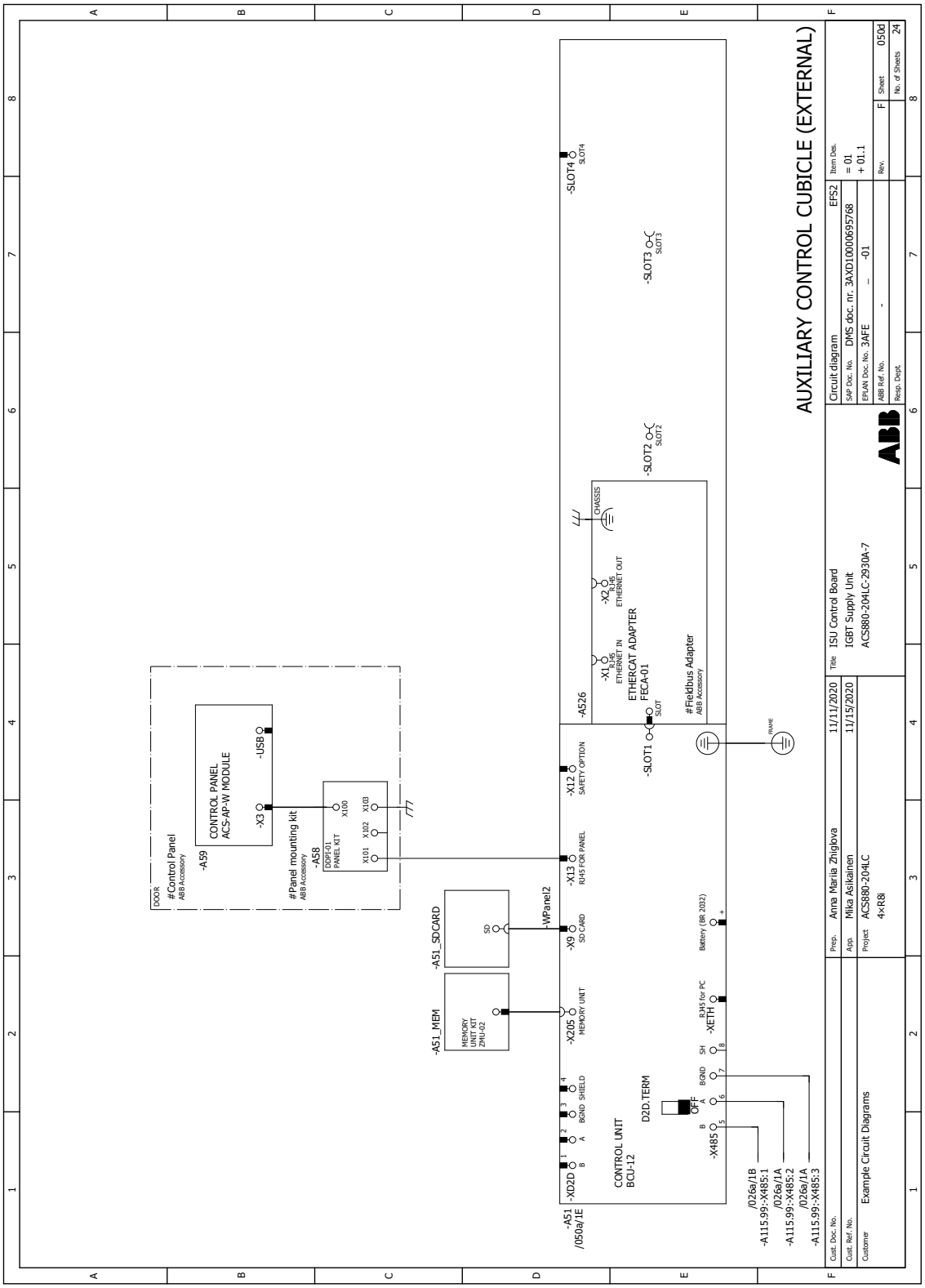
AUXILIARY CONTROL CUBICLE (EXTERNAL)
DOOR
#Control Panel
ABB Accessory
-A59
CONTROL PANEL
ACS-AP-W MODULE
-X3
-USB
#Panel mounting kit
ABB Accessory
-A58
DDPI-01
PANEL KIT
X100
X101
X102
X103
-WPanel2
-A51_SDCARD
SD
-A51_MEM
MEMORY
UNIT KIT
ZMU-02
-A51
/050a/1E
-XD2D
CONTROL UNIT
BCU-12
D2D.TERM
OFF
-X485
-X205
MEMORY UNIT
-X9
SD CARD
-X13
RJ45 FOR PANEL
-X12
SAFETY OPTION
-XETH
RJ45 for PC
Battery (BR 2032)
-A526
ETHERCAT ADAPTER
FECA-01
-X1
RJ45
ETHERNET IN
-X2
RJ45
ETHERNET OUT
CHASSIS
#Fieldbus Adapter
ABB Accessory
-SLOT1
SLOT
-SLOT2
SLOT2
-SLOT3
SLOT3
-SLOT4
SLOT4
FRAME
/026a/1B
-A115.99:-X485:1
/026a/1A
-A115.99:-X485:2
/026a/1A
-A115.99:-X485:3
Prep. Anna Mariia Zhigiova 11/11/2020
Appr. Mika Asikainen 11/15/2020
Project ACS880-204LC
4×R8i
Cust. Doc. No.
Cust. Ref. No.
Customer Example Circuit Diagrams
Title ISU Control Board
IGBT Supply Unit
ACS880-204LC-2930A-7
Circuit diagram EFS2
SAP Doc. No. DMS doc. nr. 3AXD10000695768
EPLAN Doc. No. 3AFE – -01
ABB Ref. No. -
Resp. Dept.
Item Des.
= 01
+ 01.1
Rev. F
Sheet 050d
No. of Sheets 24

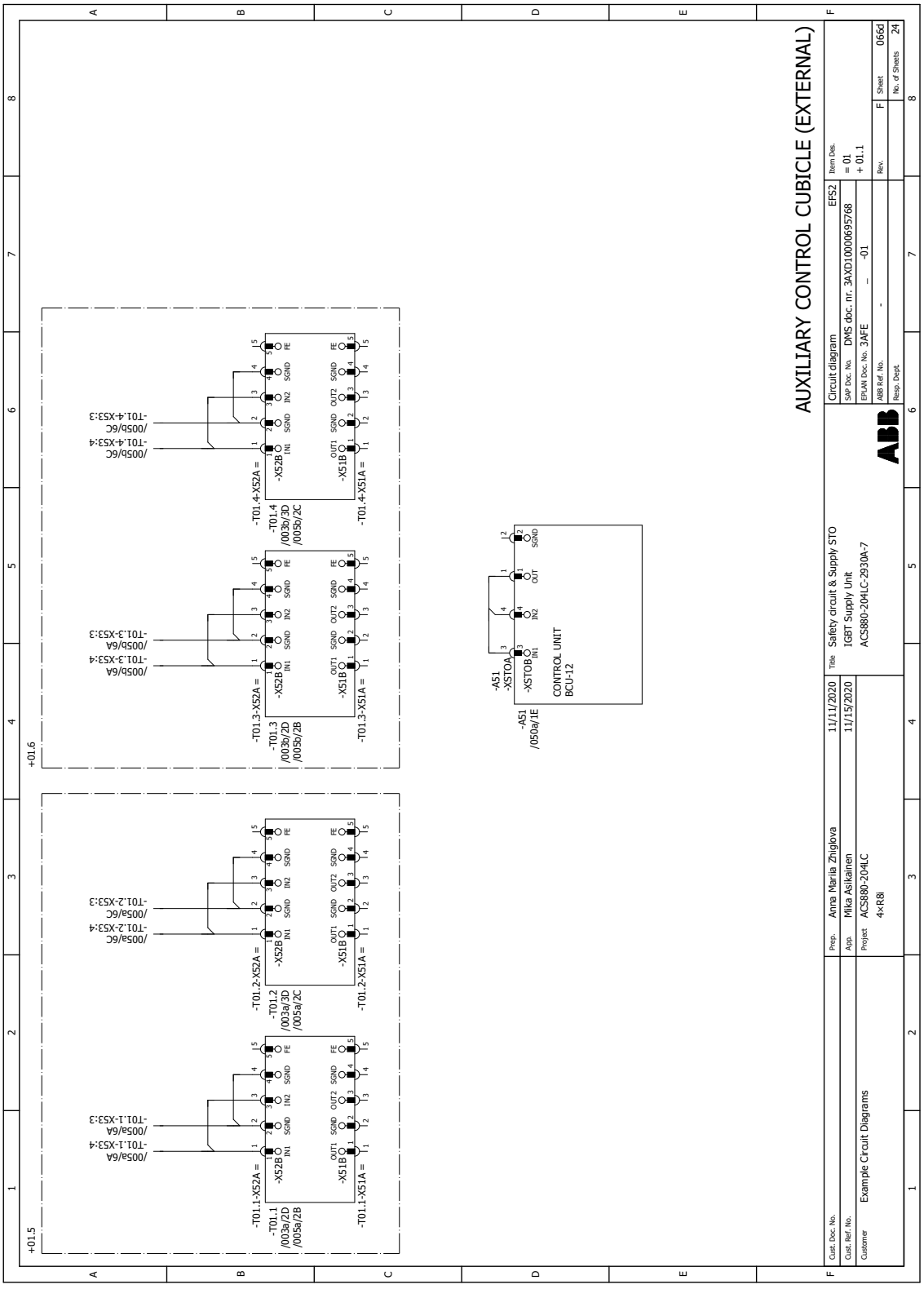
AUXILIARY CONTROL CUBICLE (EXTERNAL)
Circuit diagram
EFS2
SAP Doc. No.
DMS doc. nr. 3AXD10000695768
EPLAN Doc. No. 3AFE – -01
ABB Ref. No. - Rev. F Sheet 066d
Resp. Dept. No. of Sheets 24
Item Des.
= 01
+ 01.1
Cust. Doc. No.
Cust. Ref. No.
Customer Example Circuit Diagrams
Prep. Anna Mariia Zhiglova 11/11/2020
Appr. Mika Asikainen 11/15/2020
Project ACS880-204LC 4×R8i
Title Safety circuit & Supply STO
IGBT Supply Unit
ACS880-204LC-2930A-7
+01.5
+01.6
-T01.1-X52A =
-X52B
-T01.1
/003a/2D
/005a/2B
-T01.1-X51A =
-X51B
/005a/6A
-T01.1-X53:4
/005a/6A
-T01.1-X53:3
-T01.2-X52A =
-X52B
-T01.2
/003a/3D
/005a/2C
-T01.2-X51A =
-X51B
/005a/6C
-T01.2-X53:4
/005a/6C
-T01.2-X53:3
-T01.3-X52A =
-X52B
-T01.3
/003b/2D
/005b/2B
-T01.3-X51A =
-X51B
/005b/6A
-T01.3-X53:4
/005b/6A
-T01.3-X53:3
-T01.4-X52A =
-X52B
-T01.4
/003b/3D
/005b/2C
-T01.4-X51A =
-X51B
/005b/6C
-T01.4-X53:4
/005b/6C
-T01.4-X53:3
-A51
-XSTOA
-XSTOB
-A51
/050a/1E
CONTROL UNIT
BCU-12

Further information

Product and service inquiries

Address any inquiries about the product to your local ABB representative, quoting the type designation and serial number of the unit in question. A listing of ABB sales, support and service contacts can be found by navigating to www.abb.com/contact-centers.

Product training

For information on ABB product training, navigate to new.abb.com/service/training.

Providing feedback on ABB manuals

Your comments on our manuals are welcome. Navigate to new.abb.com/drives/manuals-feedback-form.

Document library on the Internet

You can find manuals and other product documents in PDF format on the Internet at www.abb.com/drives/documents.

a5 (frozen)
PDF-A4
Created 2024-01-05, 13:27:02

www.abb.com/drives

3AXD50000284436E

© Copyright 2024 ABB. All rights reserved.
Specifications subject to change without notice.

3AXD50000284436 Rev E (EN) 2024-01-05