ABB DRIVES

Converter module lifting device for drive cabinets

Hardware manual

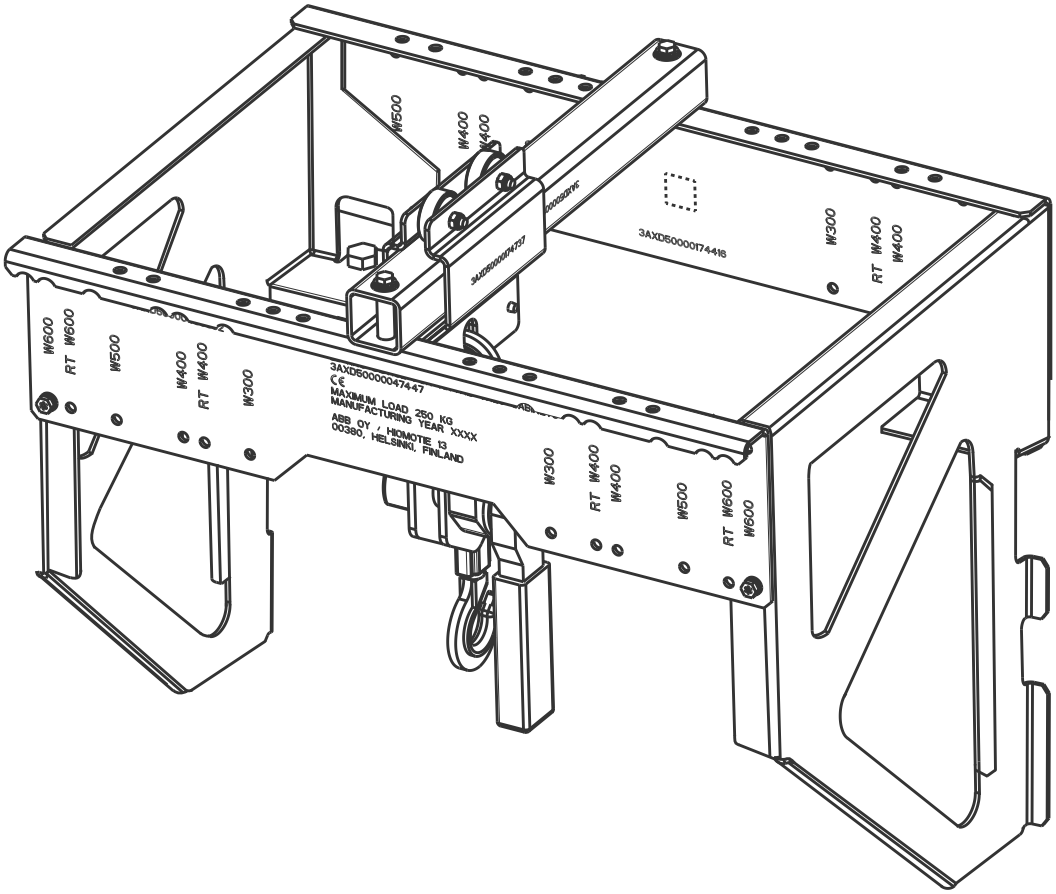

Converter module lifting device for drive cabinets

Hardware manual

Table of contents

1. Safety instructions

4. Mechanical installation

3AXD50000210268 Rev D
EN
Original instructions
EFFECTIVE: 2021-05-24

Table of contents

1 Safety instructions

Contents of this chapter 7
Complete safety instructions of the drive 7
Electrical safety precautions 8

2 Introduction to the manual

Contents of this chapter 11
Applicability 11
Compatibility 11
Target audience 12
List of related manuals 13
Converter module lifting device for the ABB drives (ACx) cabinet 13
Converter module lifting device for the Rittal TS8 and Rittal VX25 cabinet 13

3 Hardware description

Contents of this chapter 15
Overview of the lifting device 15

4 Mechanical installation

Contents of this chapter 17
Before installing the lifting device 17
Unpacking the converter module lifting device for ABB drives (ACx) cabinet 19
Unpacking the converter module lifting device for Rittal VX25 cabinet 20
Unpacking the converter module lifting device for Rittal TS8 cabinet 21
Installing the converter module lifting device 22
Exception for the IP54 drive cabinet (option +B055) 22

5 Operation

Contents of this chapter 23
Operating limits 23
Installing the converter module lifting beams/supports 23
Using the lifting device 25
Additional information 26
Information of the winch 27

6 Packing the lifting device after the use

Contents of this chapter 29
Packing 29

7 Maintenance

Contents of this chapter 31
Maintenance information 31
Declaration of Conformity 32

Further information

1

Safety instructions

Contents of this chapter

This chapter contains the references to the complete safety instructions of the drive, and the electrical safety precautions.

Complete safety instructions of the drive

WARNING!
Obey the safety instructions of the drive. If you ignore them, injury or death, or damage to the equipment can occur.

If you are not a qualified electrician, do not do installation or maintenance work.

WARNING!
Make sure that persons will not be in a danger during the installation and use of the lifting device.

Make sure that the lifting device is installed and used in accordance with good and safe working practices.

Depending on the drive type, you can find the safety instructions either in the drive hardware manual (ABB single drive cabinets and modules), or in the separate safety instructions manual (ABB multidrive cabinets and modules).

Electrical safety precautions

These electrical safety precautions are for all personnel who do work on the drive, motor cable or motor.

WARNING!
Obey these instructions. If you ignore them, injury or death, or damage to the equipment can occur.

If you are not a qualified electrical professional, do not do installation or maintenance work.

Go through these steps before you begin any installation or maintenance work.

1. Clearly identify the work location and equipment.
2. Disconnect all possible voltage sources. Make sure that re-connection is not possible. Lock out and tag out.
   - Open the main disconnecting device of the drive.
   - Open the charging switch if present.
   - Open the disconnector of the supply transformer. (The main disconnecting device in the drive cabinet does not disconnect the voltage from the AC input power busbars of the drive cabinet.)
   - If the drive is equipped with a DC/DC converter unit (optional): Open the DC switch-disconnector ([Q11], option +F286) of the DC/DC converter. Open the disconnecting device of the energy storage connected to the DC/DC converter unit (outside the drive cabinet).
   - Open the auxiliary voltage switch-disconnector (if present), and all other possible disconnecting devices that isolate the drive from dangerous voltage sources.
   - In the liquid cooling unit (if present), open the switch-disconnector of the cooling pumps.
   - If you have a permanent magnet motor connected to the drive, disconnect the motor from the drive with a safety switch or by other means.
   - Disconnect all dangerous external voltages from the control circuits.
   - After you disconnect power from the drive, always wait 5 minutes to let the intermediate circuit capacitors discharge before you continue.
3. Protect any other energized parts in the work location against contact.
4. Take special precautions when close to bare conductors.

5. Measure that the installation is de-energized. If the measurement requires removal or disassembly of shrouding or other cabinet structures, obey the local laws and regulations applicable to live working (including – but not limited to – electric shock and arc protection).
   - Before and after measuring the installation, verify the operation of the voltage tester on a known voltage source.
   - Make sure that the voltage between the drive input power terminals (L1, L2, L3) and the grounding (PE) busbar is zero.
   - Make sure that the voltage between the drive output terminals (T1/U, T2/V, T3/W) and the grounding (PE) busbar is zero.
   - Make sure that the voltage between the drive DC terminals (UDC+ and UDC-) and the grounding (PE) terminal is zero. In cabinet-built drives, measure between the drive DC busbars (+ and -) and the grounding (PE) busbar.

WARNING!
The busbars inside the cabinet of liquid-cooled drives are partially coated. Measurements made through the coating are potentially unreliable, so only measure at uncoated portions. Note that the coating does not constitute a safe or touch-proof insulation.

6. Install temporary grounding as required by the local regulations.
7. Ask for a permit to work from the person in control of the electrical installation work.

2

Introduction to the manual

Contents of this chapter

This chapter describes the manual.

Applicability

This manual is applicable with these devices:

- converter module lifting device for the ABB drives (ACx) cabinet
- converter module lifting device for the Rittal VX25 cabinet
- converter module lifting device for the Rittal TS8 cabinet.

Compatibility

The converter module lifting device for the ABB drives (ACx) cabinet is compatible with the cabinet-installed drives delivered by ABB.

The converter module lifting device for the Rittal VX25 cabinet is compatible with the converter modules delivered by ABB which are installed into a Rittal VX25 cabinet by systems integrator according to the instructions by ABB Drives.

The converter module lifting device for the Rittal TS8 cabinet is compatible with cabinet-installed ABB converter modules in Rittal TS8 cabinet.

The tables below show compatibility details: Cubicle widths, product series, and converter module frame sizes.

Cabinet/cubicle width (mm)	ACx cabinets	Rittal VX25 cabinets	Rittal TS8 cabinets
300	X		
400	X	X	X
500	X		
600	X	X	X
700	X		
800	X	X	X
1000	X[1]		

[1] Lifting device is compatible if a separate w1000 conversion kit is installed as well (3AXD50000699384).

Product family	Frame[1]
ACS800	R7i
ACS800LC	R7i, R8i, D3, D4
ACS580, ACH580, ACQ580	R6-R9
ACS880	R6-R9, R6i, R7i, D6D, D7D/T
ACS880LC	R7i, R8i, D8T, BDCL xxLC-x, inductors of BLCL-xxLC-x
ACS880U[2]	R7-R9
ACS880R[2]	R6i, R7i, H6, H7
ACS880RLC[2]	R8i, D8T

[1] In addition to the converter modules listed in the table above, the lifting device can also be used for lifting other ABB-delivered components in the cabinet. The component must have two lifting points, and weigh under 250 kg.
[2] Lifting device revision D or later is compatible with these drive types.

Additional service platform (68847711) is recommended for ACS800LC R8i, D3, D4 and ACS880LC R8i module frames.

Target audience

This manual is for all personnel who install and use the lifting device. Read the manual before you start the work.

List of related manuals

Converter module lifting device for the ABB drives (ACx) cabinet

- Cabinet installed single drive: Appropriate drive hardware manual
- Cabinet installed multidrive: Appropriate supply/inverter/brake/converter unit hardware manual and appropriate safety instructions manual for multidrive cabinets and modules
- Lifting device documentation: see section *Unpacking the converter module lifting device for ABB drives (ACx) cabinet (page 19)*.

Converter module lifting device for the Rittal TS8 and Rittal VX25 cabinet

- Single drive modules: Approriate drive hardware manual
- Multidrive modules: Approriate supply/inverter/brake/converter module hardware manual(s)
- Multidrive modules: Safety instructions for appropriate multidrive cabinets and modules
- Manuals/documents defined by the system integrator or the cabinet installed drive
- Lifting device documentation: see section *Unpacking the converter module lifting device for Rittal VX25 cabinet (page 20)*, or *Unpacking the converter module lifting device for Rittal TS8 cabinet (page 21)*.

3

Hardware description

Contents of this chapter

This chapter contains a description of the lifting devices.

Overview of the lifting device

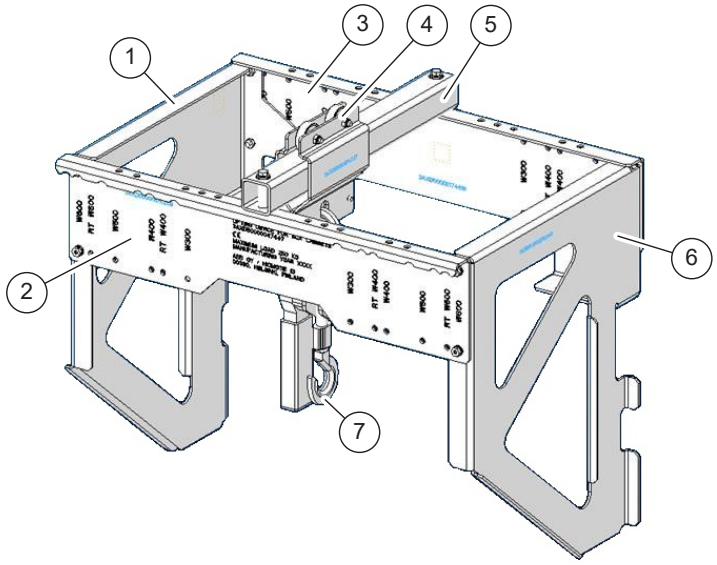

1	Left side plate	5	Lifting beam
2	Front horizontal beam	6	Right side plate
3	Rear horizontal beam	7	Lifting accessories (winch)
4	Winch slide		

The figures below shows the differences between the lifting device variants: The side support plates differ, otherwise the lifting devices are similar.

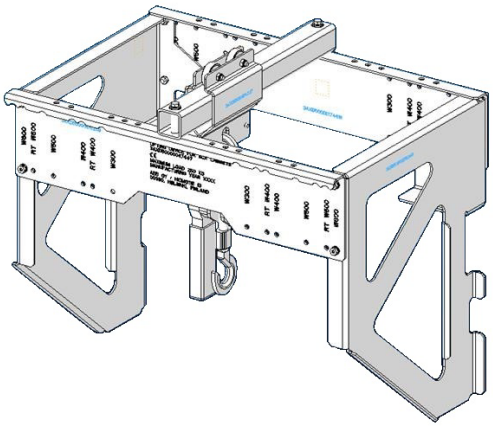	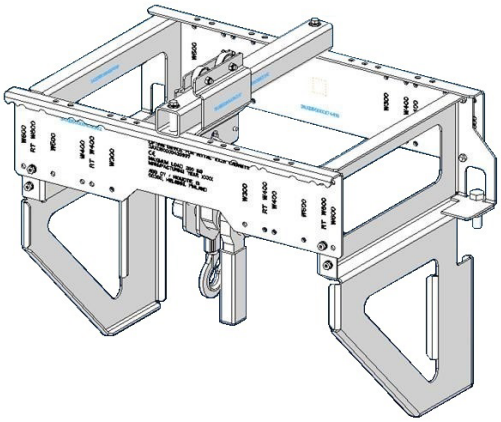
Converter module lifting device for the ABB drives (ACx) cabinet	Converter module lifting device for the Rittal VX25 cabinet
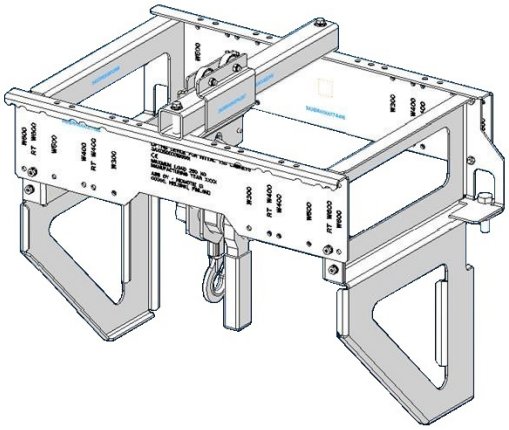	
Converter module lifting device for the Rittal TS8 cabinet	

4

Mechanical installation

Contents of this chapter

The chapter contains the installation instructions of the lifting device.

Before installing the lifting device

Before you start the installation of the lifting device:

- Make sure that the lifting device is compatible with the cabinet, and the converter module to be lifted. See sections *Applicability (page 11)* and the side of the package to identify the lifting device.
- Make sure that the drive cabinet door can open 135 degrees. If it cannot, either remove the parts on the door that prevent the opening (such as door air inlet grille), or remove the whole door.
- ABB drive (ACx) cabinets: Remove the marine supports/lifting eye-bolts at the front of the roof (a) (if any). The front cover of the roof (b) can also be removed (not necessary). See the figure below.
- Rittal VX25 and TS8 cabinets: Remove any lifting eye bolts from the mounting points of the lifting device.

WARNING!
Do not install the lifting device to a cabinet that it is not compatible with.

Lift only those converter modules that the lifting device is intended for.

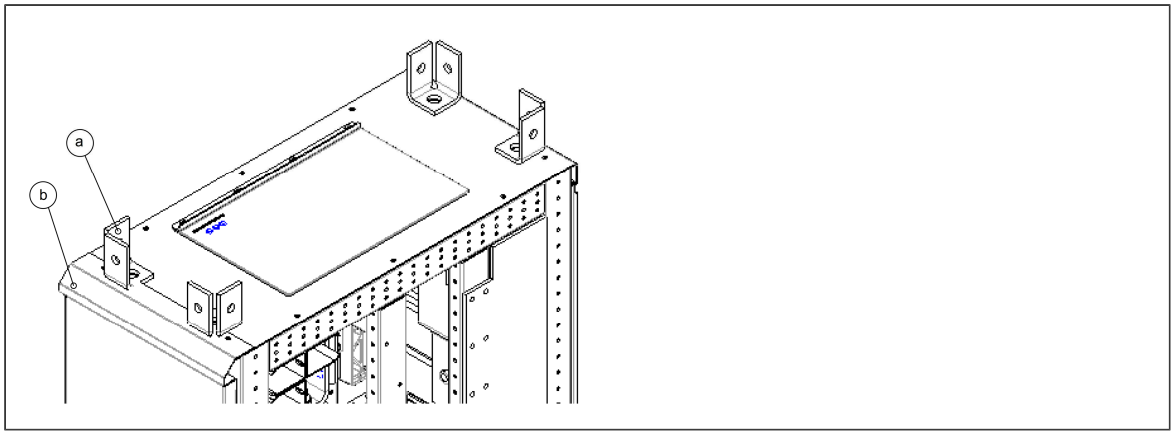
a
b

Unpacking the converter module lifting device for ABB drives (ACx) cabinet

Check the right ID of the package: 3AXD50000047447

Check the contents of the package:

- parts of the lifting device (see the illustration below)
- lifting device assembly drawing (3AXD50000179398)
- winch operating manual
- this manual (3AXD50000210628)
- layout drawing of the lifting device package (3AXD50000193950)

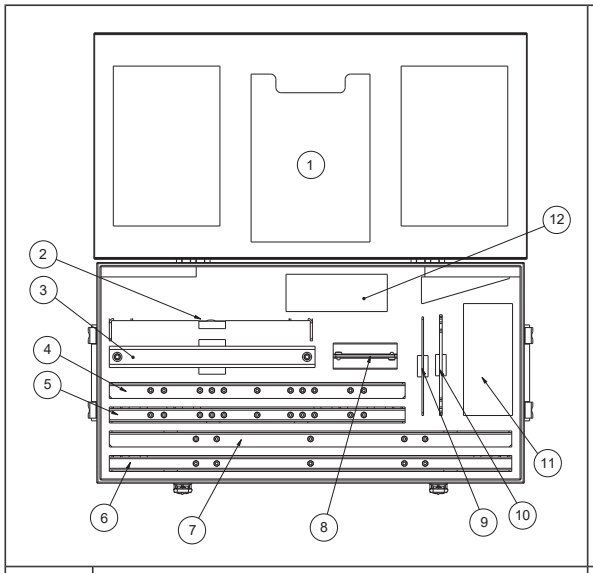

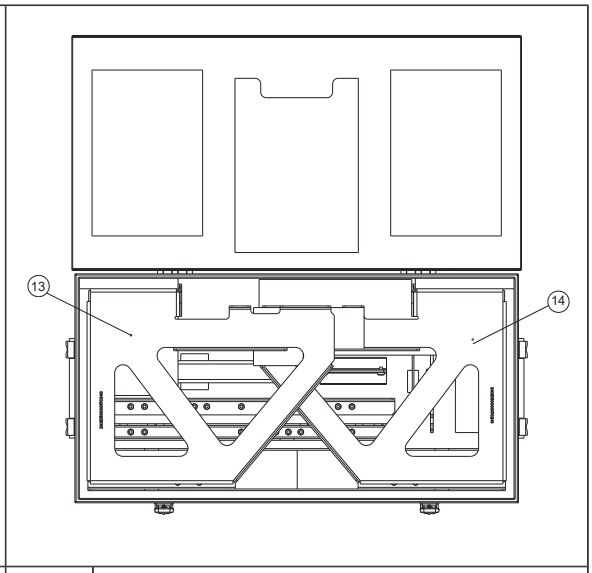

1	Document pocket	8	Winch slide
2	Lifting beam R9 / R8	9	Stopper plate
3	Lifting beam	10	Lifting plate
4	Rear horizontal beam	11	Lifting accessories (lever hoist, winch)
5	Front horizontal beam	12	Equipment bag
6	Front horizontal beam (for cabinet width 700 & 800)	13	Right side plate
7	Rear horizontal beam (for cabinet width 700 & 800)	14	Left side plate

Unpacking the converter module lifting device for Rittal VX25 cabinet

Check the right ID of the package: 3AXD50000439997

Check the contents of the package:

- parts of the lifting device (see illustration below)
- lifting device assembly drawing (3AXD50000439409)
- layout drawing of the lifting device package (3AXD50000440979)
- this manual (3AXD50000210268)
- winch operating manual

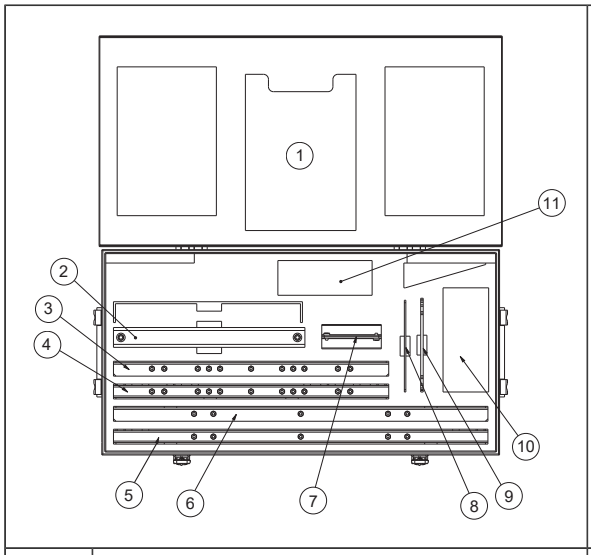

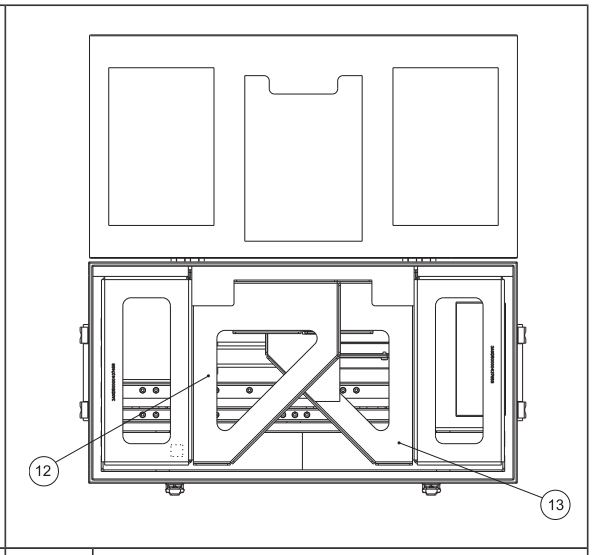

1	Document pocket	8	Stopper plate
2	Lifting beam	9	Lifting plate
3	Rear horizontal beam	10	Lifting accessories (lever hoist, winch)
4	Front horizontal beam	11	Equipment bag
5	Front horizontal beam (for cabinet width 800)	12	Left side plate
6	Rear horizontal beam (for cabinet width 800)	13	Right side plate
7	Winch slide		

Unpacking the converter module lifting device for Rittal TS8 cabinet

Check the right ID of the package: 3AXD50000196661

Check the contents of the package:

- parts of the lifting device (see illustration below)
- lifting device assembly drawing (3AXD50000183333)
- layout drawing of the lifting device package (3AXD50000199747)
- this manual (3AXD50000210268)
- winch operating manual

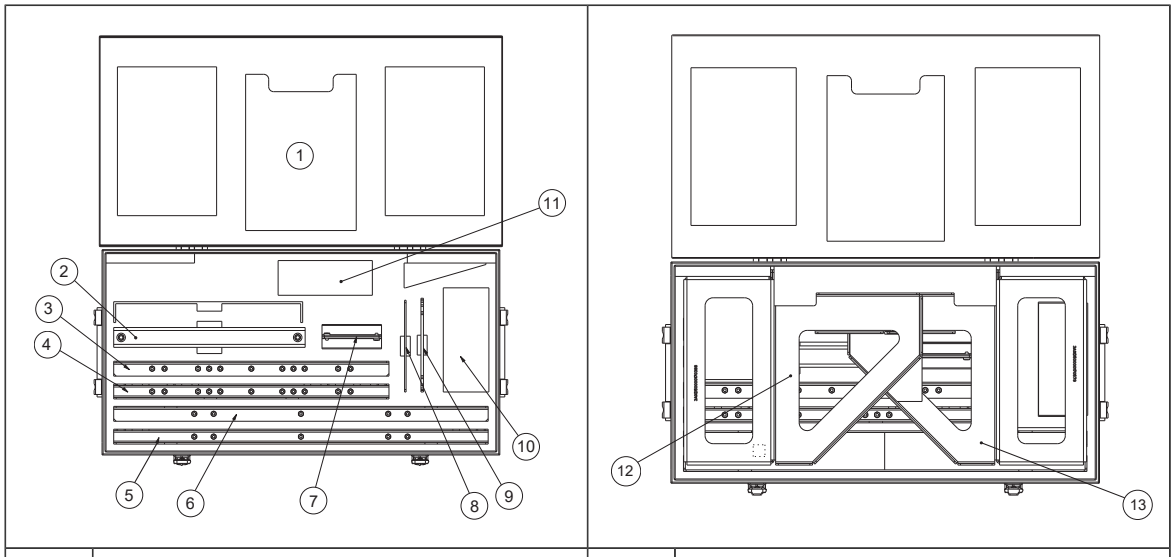

1	Document pocket	8	Stopper plate
2	Lifting beam	9	Lifting plate
3	Rear horizontal beam	10	Lifting accessories (lever hoist, winch)
4	Front horizontal beam	11	Equipment bag
5	Front horizontal beam (for cabinet width 800)	12	Left side plate
6	Rear horizontal beam (for cabinet width 800)	13	Right side plate
7	Winch slide		

Installing the converter module lifting device

WARNING!
Do not install the lifting device to a cabinet that it is not compatible with. Lift only those converter modules that the lifting device is intended for.

WARNING!
Stop the drive and do the steps in section *Electrical safety precautions (page 8)* before you start to work.

Follow the step by step installation instructions in the assembly drawing:

- ACx cabinet (3AXD50000179398)
- Rittal VX25 cabinet (3AXD50000439409)
- Rittal TS8 cabinet (3AXD50000183333)

Tighten the bolts to the torques defined in the assembly drawing.

Exception for the IP54 drive cabinet (option +B055)

The roof of the IP54 drive cabinet (option +B055) prevents the lifting device installation in the exact order shown in the assembly drawing.

Instead, you must:

1. Attach the back support plate to the side plates.
2. Attach this subassembly to the cabinet.

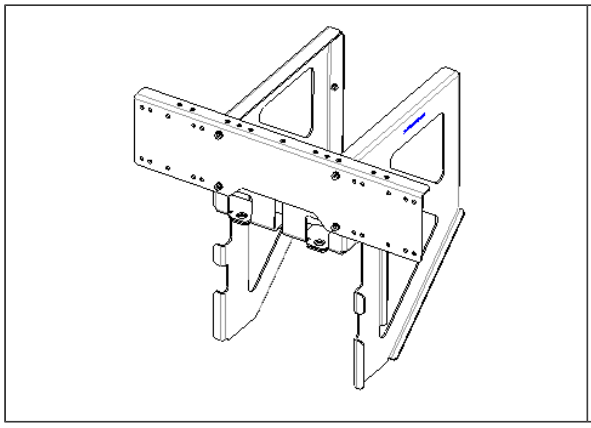

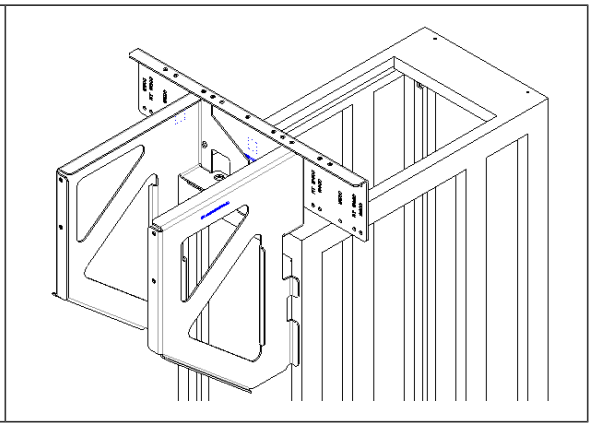

5

Operation

Contents of this chapter

The chapter contains the winch operating guidelines and a reference to the complete winch manual.

Operating limits

Lifting device:

Maximum load: 250 kg

Maximum lifting angle: 5 degrees (seen from front)

Lifting slings:

Chain width and material: 4 mm steel chain

Maximum lifting angle: 60 degrees

Maximum load: Depends on the lifting angle. See the table below.

Chain	0-45 degree	45-60 degree
4 mm	880 kg	630 kg

Installing the converter module lifting beams/supports

The lifting device package contains two lifting beams/supports. You must use them when lifting certain converter module frame sizes. The table below shows the converter modules, and the compatible lifting beam/supports.

Note: When you use lifting beam/ support, you connect the lifting device directly to the beam/support typically. You do not (cannot) use the chain slings.

Lifting beam	ACS880 frames	ACx580 frames
3AXD50000002054	R6i	-
3AXD50000002054	R7i	-
3AXD50000002054	D6D	-
3AXD50000002054	D7D/T	-
3AXD50000195305	-	R8
3AXD50000195305	-	R9

Install the lifting beam 3AXD50000002054 according to the illustrations below. Use the two M6x16 combiscrews in the package.

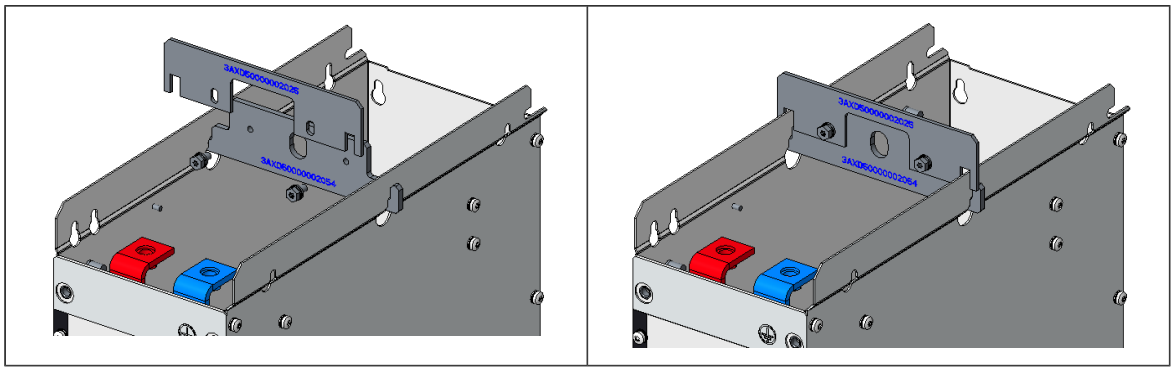

Install the lifting beam 3AXD50000195305 according to the illustration below. Use the two M12x25 bolts and M12 nuts in the package.

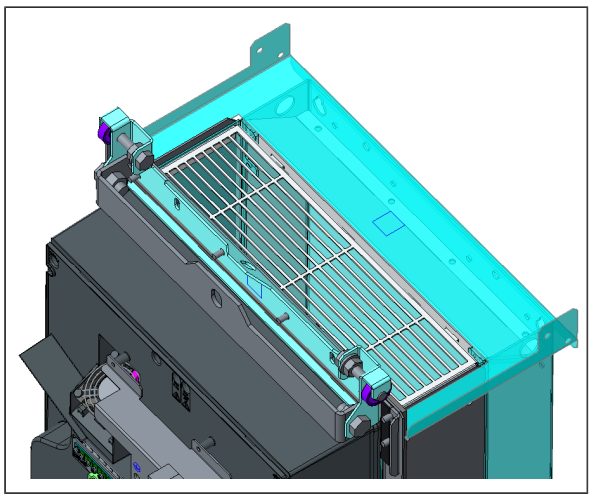

Using the lifting device

WARNING!
Obey the instructions given in the winch manual.

Make sure that you have tested the winch brake and know that it is working right.

WARNING!
Obey the instructions for the converter module installation/replacement. See the appropriate hardware manual.

WARNING!
Stop the drive and do the steps in section *Electrical safety precautions (page 8)* before you start to work.

1. Align the lifting beam with the converter module to be lifted.
   Make sure there is no left/right lifting angle.
2. If the converter module lifting beams/supports are required, make sure that they are installed. See section *Installing the converter module lifting beams/supports (page 23)*. Attach the chain slings to the winch and to the converter module lifting points. See the appropriate hardware manual for the lifting point locations. If you cannot use the chain slings, connect the winch directly to the lifting beams/supports of the converter module.
3. Adjust the manual lever of the winch to the right position:
   - UP = Move module upwards with the winch.
   - DN = Move module downwards with the winch.
4. Operate the winch to tighten the slings first, and then continue carefully so that the winch carries the load entirely.
   Lift/lower the load to the desired position.
5. Before you release the load or remove the lifting slings/winch hooks, attach the module reliably to a supporting structure:
   - If you are removing the module from the cabinet: Attach the module to the truck pallet.
   - If you are installing the module into a cabinet: Attach the module to the cabinet.
6. Continue the operation of the winch until the winch has no load any more.
7. Turn the winch lever to the *FREE* position and remove the lifting hooks from the module.

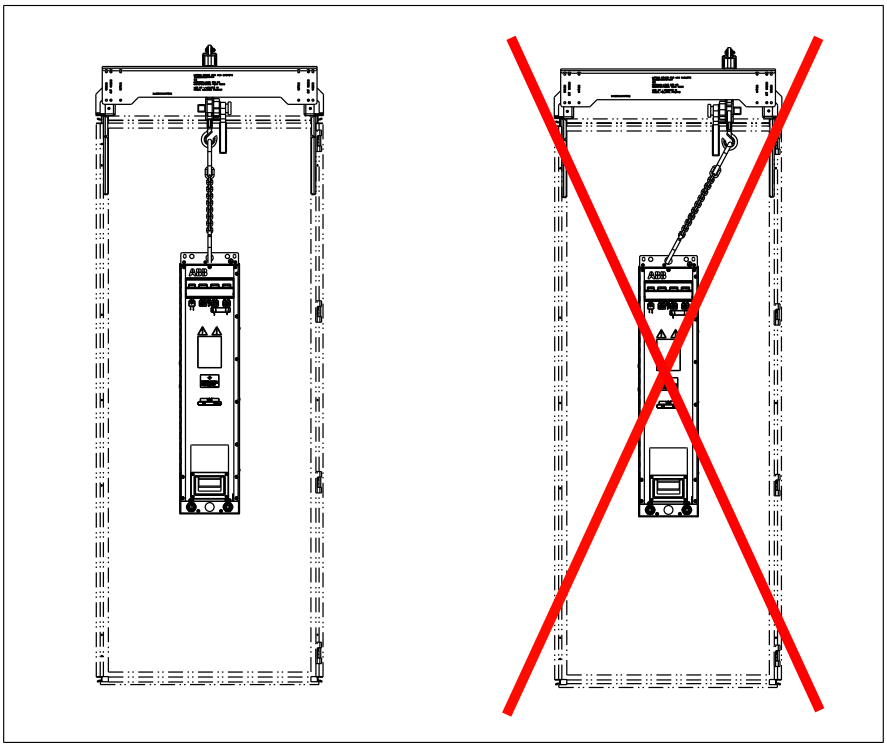

Additional information

To lift the converter module, use a chain sling or a special converter module lifting beam. The lifting beams in the package are for those modules that cannot be lifted with chain slings.

Mount the chain slings to the winch hook. Adjust the length of the chain slings by using the shortening hooks. Remember to make sure that the winch and chain slings hooks are locked. Lifting and lowering the module is done by the winch.

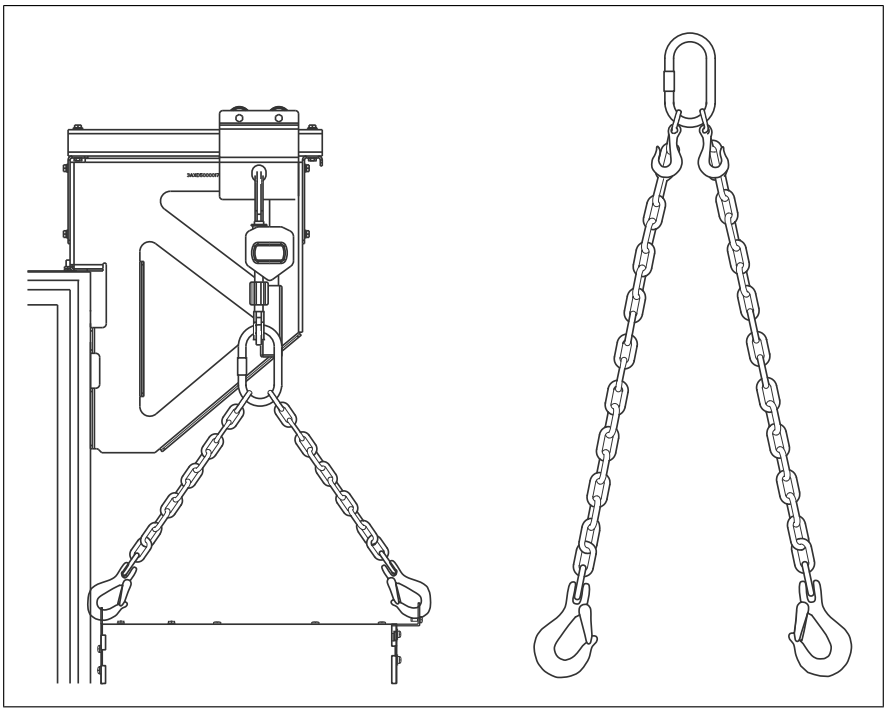

Information of the winch

This section contains some basic information of the winch. For more specific information, see the winch manual delivered in the lifting device package.

The winch is supplied with the lifting device in its own packaging. The winch package has a manual for the winch. Read the manual before using the winch.

When using the winch, always make sure that the lifting hooks are locked before lifting or lowering. The winch has a lever with three positions: FREE, DOWN and UP. When using FREE position, the winch must be unloaded.

When you use the winch, it is a good practice to start always with a brake test. See the winch manual for the instructions.

6

Packing the lifting device after the use

Contents of this chapter

This chapter instructs in packing and storing the lifting device.

Packing

After use, pack the lifting device back into packing box:

1. Check that all parts of the lifting device are in good condition.
   If there are any defect in any part that will prevent future use of the lifting device, purchase a new lifting device.
2. Pack the lifting device parts to the packing box.
   Note: For the layout of the package, see section:
   - ABB Drives ACx cabinets: *Unpacking the converter module lifting device for ABB drives (ACx) cabinet (page 19)*
   - Rittal VX25 cabinets: *Unpacking the converter module lifting device for Rittal VX25 cabinet (page 20)*
   - Rittal TS8 cabinets: *Unpacking the converter module lifting device for Rittal TS8 cabinet (page 21)*
3. Store the lifting device and its packaging in a dry place.

7

Maintenance

Contents of this chapter

The chapter contains information of maintenance of the lifting device and Declaration of Conformity.

Maintenance information

Some parts of the lifting device must be maintained. Such parts are winch and chain slings. Inspect the other parts of the lifting device always before using the lifting device and after use.

For the winch, the service instructions and more detailed information on brake testing are in its operating manual. The service consists of oiling the winch and checking other condition. The same procedure applies to the chain slings. In addition, a more thorough inspection of the winch is required once a year according to the winch manual.

Declaration of Conformity

EU Declaration of Conformity

Machinery Directive 2006/42/EC

We
Manufacturer: ABB Oy
Address: Hiomotie 13, 00380 Helsinki, Finland.
Phone: +358 10 22 11
declare under our sole responsibility that the following products:

Light crane systems

ABB lifting device for **ABB's ACx cabinets**	(material code 3AXD50000047447)
ABB lifting device for **Rittal TS8 cabinets**	(material code 3AXD50000196661)
ABB lifting device for **Rittal VX25 cabinets**	(material code 3AXD50000439997)
Lifting beam	(material code 3AXD50000195305)
Lifting plate	(material code 3AXD50000002054)
Lifter conversion kit, w1000	(material code 3AXD50000699384)

used for lifting ABB's **frequency converters, frequency converter components** and other **cabinet components** supplied by ABB**, equipped with two lifting points** and **weight under 250 kg**

are in conformity with all the relevant lifting accessory requirements of EU Machinery Directive 2006/42/EC.

The following harmonized standards have been applied:

EN 16851:2017	Cranes - Light crane systems
EN 13155:2003 + A2:2009	Cranes - Safety - Non-fixed load lifting attachments

Person authorized to compile the technical file:
Name and address: Vesa Tiihonen, Hiomotie 13, 00380 Helsinki, Finland

Helsinki, 31 Mar 2021

Signed for and on behalf of:

Peter Lindgren
Peter Lindgren
Vice President, ABB Oy

Miikka Aho
Vice President, ABB Oy

1/1

3AXD10000665649 rev.C

Further information

Product and service inquiries

Address any inquiries about the product to your local ABB representative, quoting the type designation and serial number of the unit in question. A listing of ABB sales, support and service contacts can be found by navigating to www.abb.com/searchchannels.

Product training

For information on ABB product training, navigate to new.abb.com/service/training.

Providing feedback on ABB manuals

Your comments on our manuals are welcome. Navigate to new.abb.com/drives/manuals-feedback-form.

Document library on the Internet

You can find manuals and other product documents in PDF format on the Internet at www.abb.com/drives/documents.

a2 (frozen)
PDF-A4
Created 2021-05-26, 15:53:26

www.abb.com/drives

3AXD50000210268D

© Copyright 2021 ABB. All rights reserved.
Specifications subject to change without notice.

3AXD50000210268 Rev D (EN) EFFECTIVE 2021-05-24