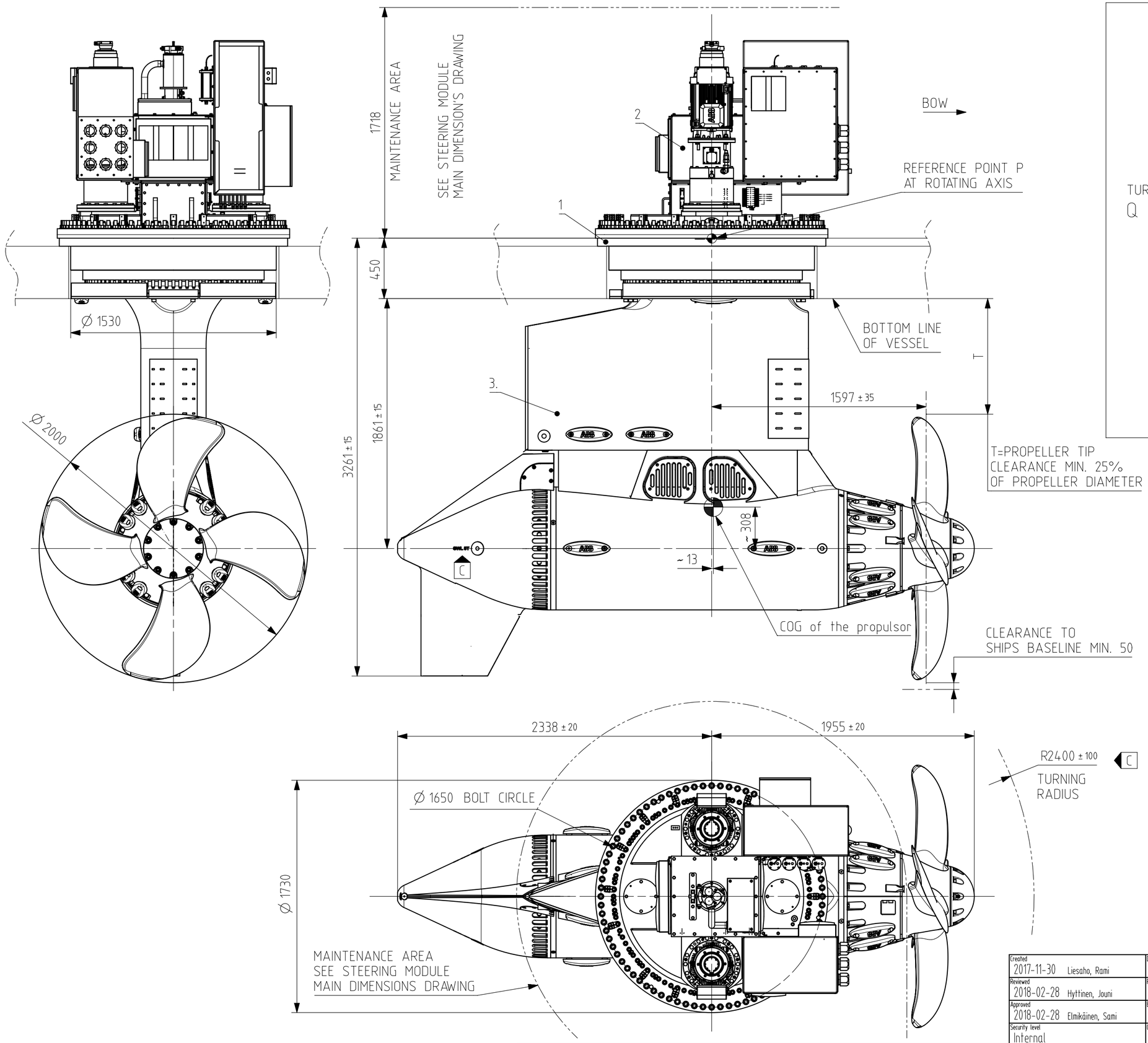

DIMENSIONING FORCES AT REFERENCE POINT P ACCORDING TO DOCUMENT "MAXIMUM SUPPORT FORCE"

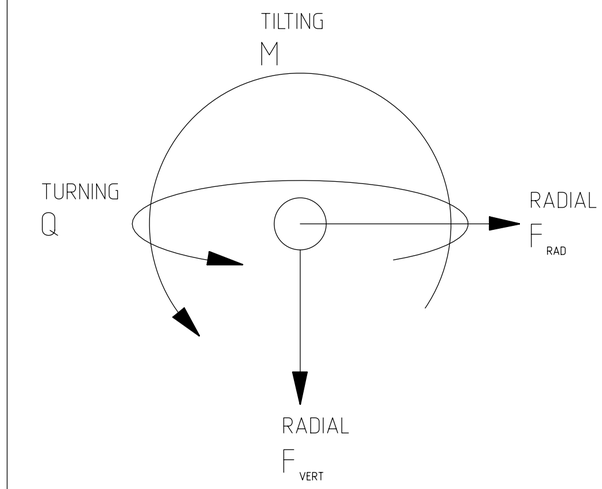

MAXIMUM SUPPORT FORCES MAY OCCUR SIMULTANEOUSLY

1. ASSEMBLY RING (NOT INCLUDED IN DELIVERY)
2. STEERING MODULE
3. PROPULSION MODULE

We reserve all rights in this document and in the information contained therein. Reproduction, use or disclosure to third parties without express authority is strictly forbidden. © Copyright 2018, ABB.
In case of interpretation disputes the English text applies.

Unless otherwise stated:
General tolerances for welded constructions EN ISO 13920-BF.
Welding quality level according to EN ISO 5817.
Stamped steel parts DIN 6930-m. Thermal cut ISO 9013-331.

Unless otherwise stated:
General tolerances for machining ISO 2768-mK.
Threads according to ISO 965 Tolerance class 6H/6g.
Symbols for roughness according to ISO 1302.

Rev	Revision text	Date	Created	Reviewed	Approved
C	Marking and Turning radius updated	2018-11-07	CNJEMO	SAEL	VIRA

Created 2017-11-30 Liesaho, Rami	Document kind 2	Title MAIN DIMENSIONS	Scale 1:20
Reviewed 2018-02-28 Hyttinen, Jouni	Responsible department VAX		
Approved 2018-02-28 Elmikäinen, Sami	Based on		Language EN
Security level Internal	Our reference / Weight kg	Machine Type AZIPOD C0861 - S1400	Size A2
ABB Marine & Ports		Document id 3AFV3439348	Revision C / Sheet 1/1

ABBA2DF1 NX