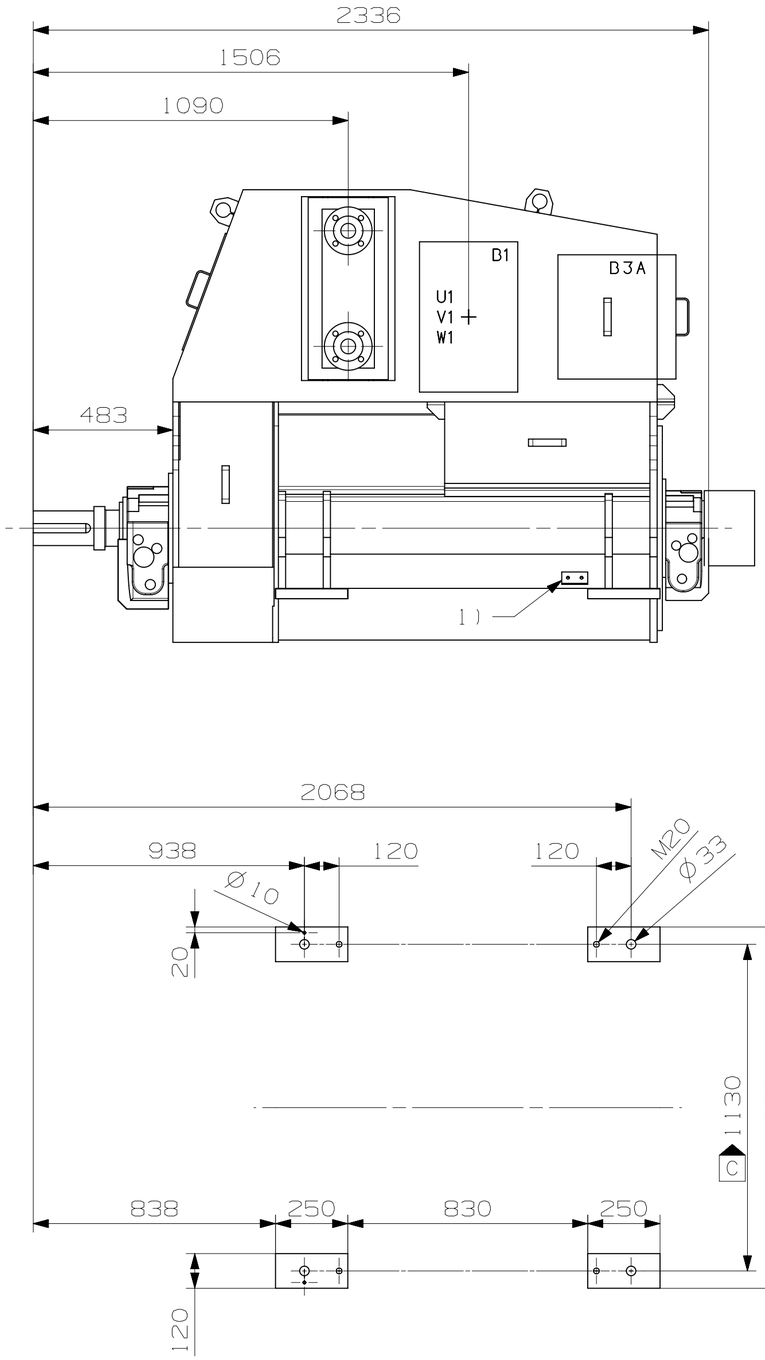
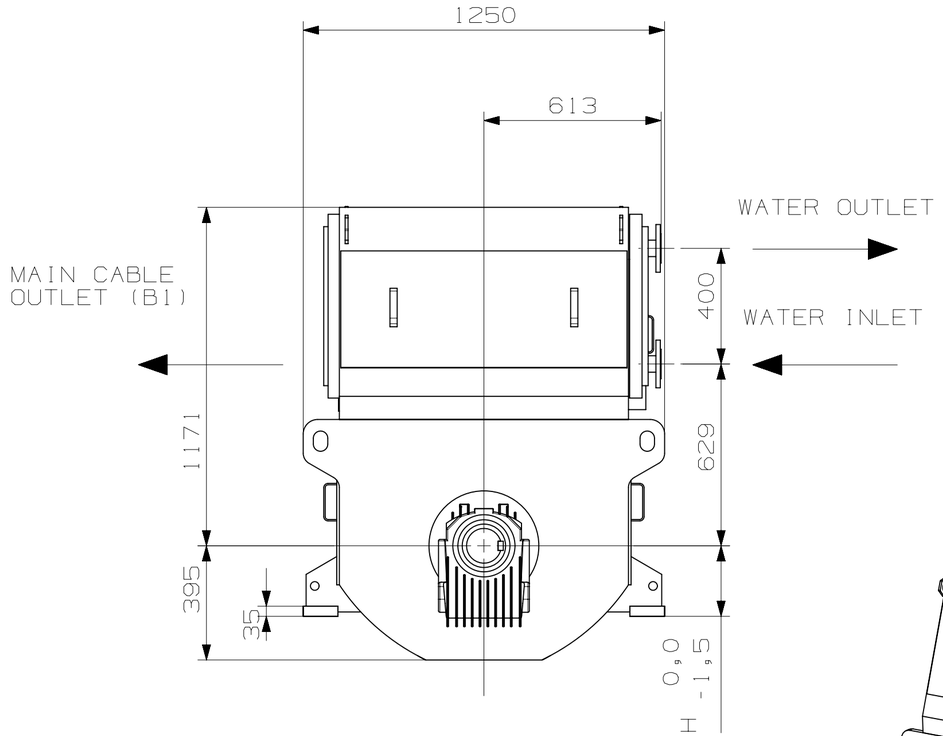
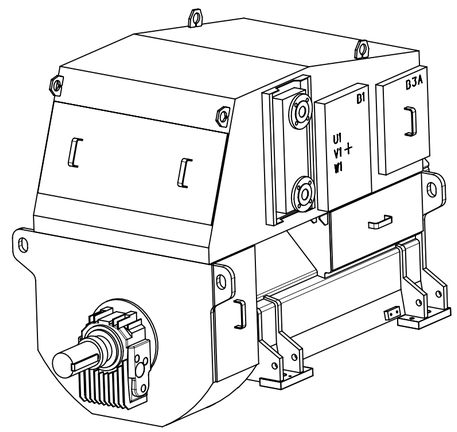
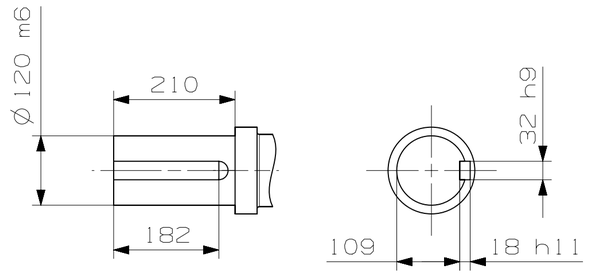








KEYWAY AND KEY
DIN 6885 B32×18×182

SHAFT END 1:7.5

B1 MAIN TERMINALS
B3A TERMINALS FOR ACCESSORIES

WATER FLANGES: DN50 DIN2633 PN16

1) EARTHING POINTS ON BOTH SIDES

We reserve all rights in this document and in the information contained therein. Reproduction, use or disclosure to third parties without express authority is strictly forbidden. © Copyright 2016 ABB.
In case of interpretation disputes the English text applies.

Unless otherwise stated:
General tolerances for welded constructions EN ISO 13920-BE.
Welded quality level according to EN ISO 5817.
Stamped steel parts DIN 6930-m. Thermal cut ISO 9013-442.

Unless otherwise stated:
General tolerances for machining ISO 2768-mK.
Welded quality level according to ISO 5817 corner joints D.
Symbols for roughness according to ISO 1302.

Rev	Revision text	Date	Created	Reviewed	Approved
C	1130 WAS 1140	2016-07-28	CNSAHU	CNTUTU	CNTUTU

Created: firilii	Machine type:	Title: PIF MODEL AMG_0400_L_LS_	Scale: 1:10
Reviewed: Riikonen, Heikki	Responsible department:		
Approved: Kamppuri, Janne	Based on:		Language: EN
Distribution: Functional code: AH	Work number:	Weight: 0	Type designation: AMG 0400L___ LS_ Mounting:	Size: A3
ABB Motors and Generators		Document id: 3AFP5806975 Revision: C	Sheet: 1/1

ABBA2BH1

NX