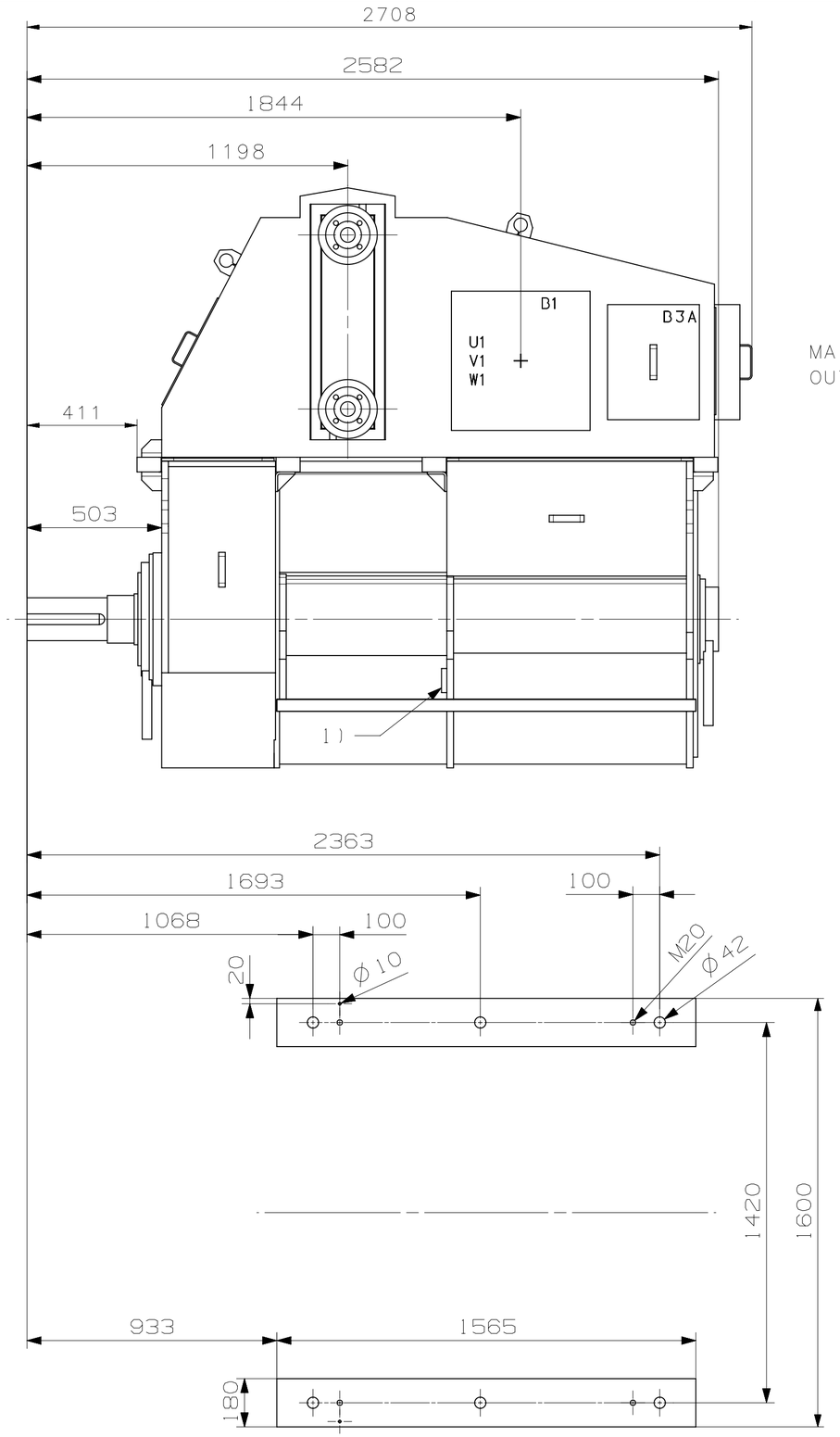

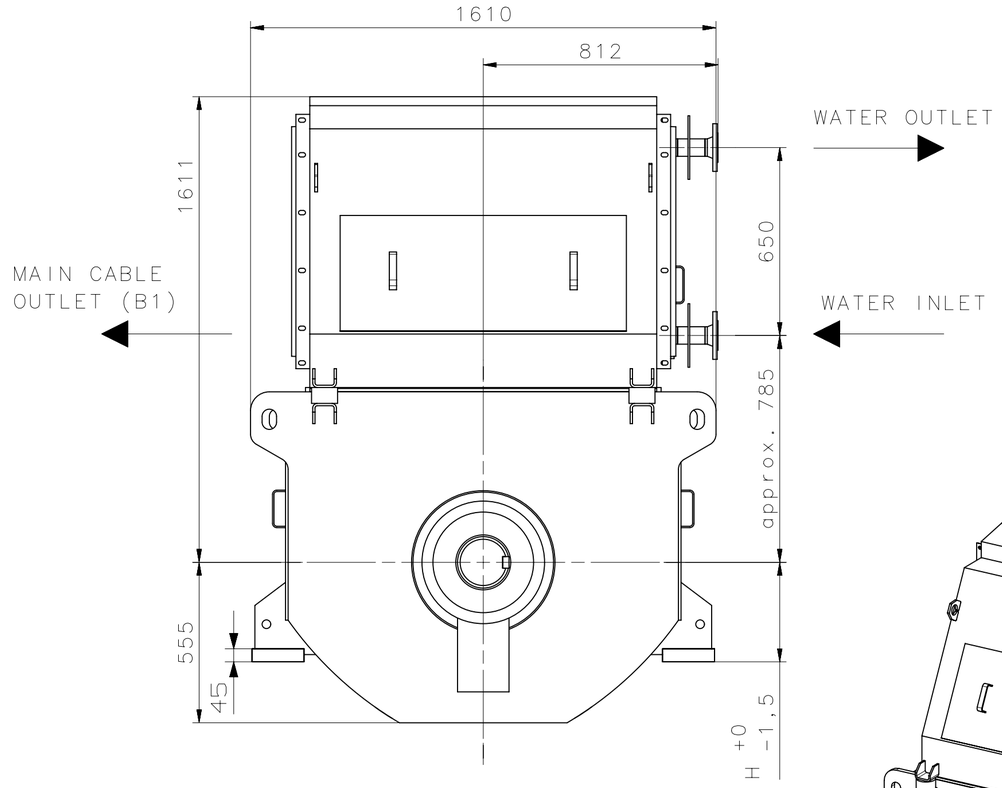

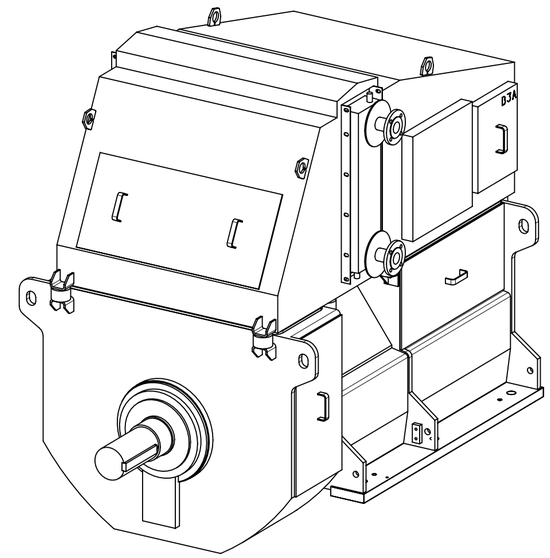

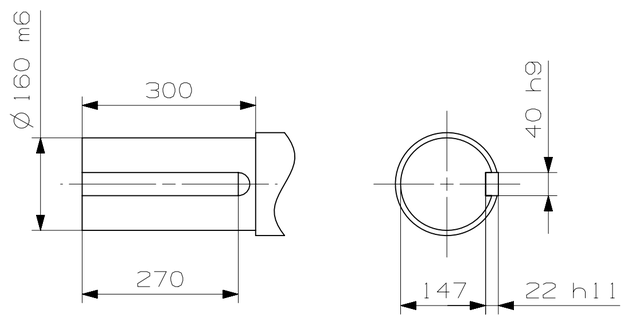

KEYWAY AND KEY
DIN 6885 B40x22x270

SHAFT END 1:7.5

B1 MAIN TERMINALS
B3A TERMINALS FOR ACCESSORIES

WATER FLANGES: DN50 DIN2633 PN16

1) EARTHING POINTS ON BOTH SIDES

We reserve all rights in this document and in the information contained therein. Reproduction, use or disclosure to third parties without express authority is strictly forbidden. © Copyright 2010-2017 ABB. In case of interpretation disputes the English text applies.

Unless otherwise stated:
General tolerances for welded constructions EN ISO 13920-BE.
Welding quality level C according to EN ISO 5817.
Stamped steel parts DIN 6930-m. Thermal cut ISO 9013-442.

Unless otherwise stated:
General tolerances for machining ISO 2768-mK.
Threads according to ISO 965 tolerance class 6H/6g.
Symbols for roughness according to ISO 1302.

Rev	Revision text	Date	Created	Reviewed	Approved
D	Top module changed	2017-06-11	CNROYE	CNPEZH04	CNJUGU04

Created: 2010-06-22 firilii	Machine type	Title: PIF MODEL AMG_0560_M_LA_	Scale: 1:15
Reviewed: 2010-06-23 Saarinen, Ari	Responsible department		
Approved: 2010-06-23 Kamppuri, Janne	Based on		Language: EN
Distribution / Functional code: AH	Work number / Weight: 0	Type designation: AMG 0560M___ LA_ / Mounting	Size: A2
ABB Motors and Generators		Document id: 3AFP5806822 / Revision: D	Sheet: 1/1

ABBA2DFI

NX