ABB INDUSTRIAL DRIVES

DCS880 drives

H8T (alternate firing) manual

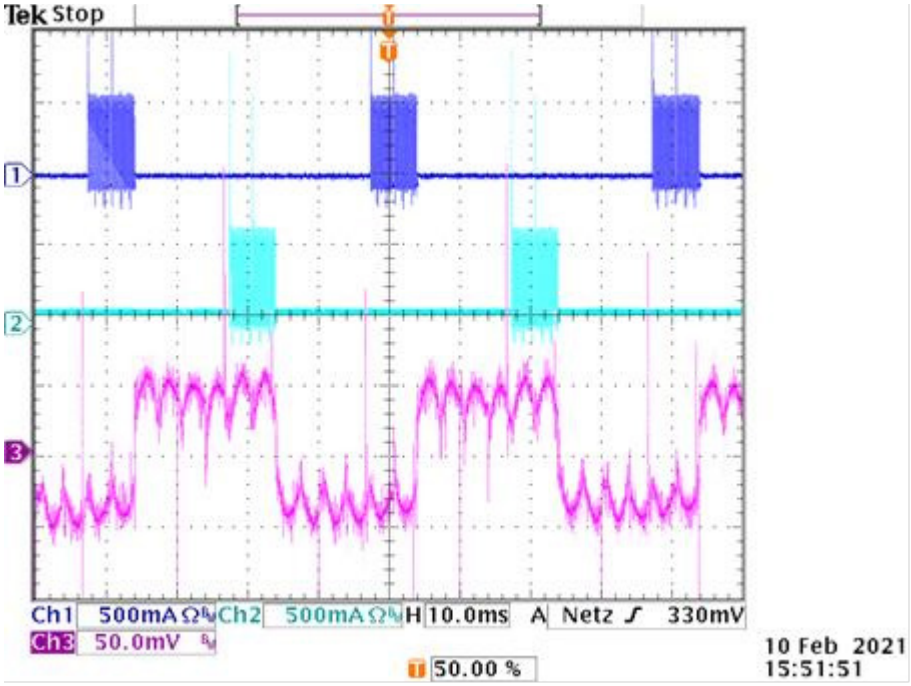

DCS880 Drive Manuals

General	Publication number	EN	DE	IT	ES	FR	PL	ZH	RU
DCS880 Quick guide	3ADW000545	EN	DE	IT	ES	FR			
Safety instructions all languages	3ADW000481	EN	DE	IT	ES	FR	PL	ZH	RU
DCS880 Manual set	DCS880 Manual set	EN							
DCS880 Units									
DCS880 Flyer	3ADW000475	EN	DE	IT	ES	FR		ZH	RU
DCS880 Technical catalog	3ADW000465	EN	DE	IT	ES	FR	PL	ZH	RU
DCS880 Hardware manual	3ADW000462	EN	DE	IT	ES	FR	PL		RU
DCS880 Firmware manual	3ADW000474	EN	DE	IT	ES	FR	PL		RU
DCS880 Service manual	3ADW000488	EN							
DCS880 Hardparallel manual (on request only)	3ADW000530	EN							
DCS880 12-pulse manual	3ADW000533	EN							
DCS880 Current measurement aid (SDCS-CMA-2) manual	3ADW000745	EN							
ACS-AP-x assistant control panels user's manual	3AUA0000085685	EN							
DCS Thyristor power converter – Technical guide	3ADW000163	EN							
DCS External DC voltage measurement H1 … H5	3ADW000601	EN							
Functional safety									
Supplement for functional safety	3ADW000452	EN		IT	ES	FR	PL		RU
Functional safety for enclosed converter									
+Q957 Prevention of unexpected Start Up	3ADW000504	EN							
+Q951 Emergency stop, category 0 with MC opening	3ADW000505	EN							
+Q952 Emergency stop, category 1 with MC opening	3ADW000506	EN							
+Q963 Emergency stop, category 0 without MC opening	3ADW000507	EN							
+Q964 Emergency stop, category 1 without MC opening	3ADW000508	EN							
Enclosed converter									
DCS880-A Catalog	3ADW000531	EN							
DCS880-A Installation manual	3ADW000627	EN							
DCS800-A +S880 Enclosed converters, flyer	3ADW000523	EN							
Rebuild and upgrade systems									
DCS880-R Rebuild manual	3ADW000599	EN							
DCS880-U Upgrade manual	3ADW000719	EN							
Door mounting kits									
DPMP-01 mounting platform for ACS-AP control panel	3AUA0000100140	EN							
DPMP-02 mounting platform for ACS-AP control panel	3AUA0000136205	EN							
Serial communication									
FCAN-01 CANopen adapter module	3AFE68615500	EN	DE						
FDNA-01 DeviceNet™ adapter module	3AFE68573360	EN							
FECA-01 EtherCAT adapter module	3AUA0000068940	EN	DE		ES				
FENA-11/-21 Ethernet adapter module	3AUA0000093568	EN						ZH	
FEPL-02 Ethernet POWERLINK adapter module	3AUA0000123527	EN	DE						
FPBA-01 PROFIBUS DP adapter module	3AFE68573271	EN	DE				PL	ZH	
FSCA-01 RS-485 adapter module	3AUA0000109533	EN						ZH	
FDCO-01/02 DDCS communication modules	3AUA0000114058	EN							
FSPS-21 PROFIsafe safety functions module	3AXD50000158638	EN							
FSO-21 Safety functions module	3AXD50000015614	EN							
Tool and maintenance manuals and guides									
Drive Composer PC tool	3AUA0000094606	EN							
Drive application programming (IEC61131-3) manual	3AUA0000127808	EN							
Adaptive programming, Application guide	3AXD50000028574	EN							
NETA-21 remote monitoring tool	3AUA0000096939	EN							
NETA-21 remote monitoring tool guide	3AUA0000096881	EN							
DDCS branching unit NDBU-95 user's manual	3BFE64285513	EN							
Extension modules									
FIO-11 Analog extension module	3AFE68784930	EN	DE	IT					
FIO-01 Digital extension module	3AFE68784921	EN	DE	IT					
FAIO-01 Analog extension module	3AUA0000124968	EN	DE						
FDIO-01 Digital extension module	3AUA0000124966	EN							
FEN-01 TTL encoder interface	3AFE68784603	EN	DE	IT				ZH	
FEN-31 HTL encoder interface	3AUA0000031044	EN						ZH	
FSE-31 pulse encoder interface module user's manual	3AXD50000016597	EN							
FEA-03 F series extension adapter	3AUA0000115811	EN							
Ethernet tool network for ACS880 drives appl. guide	3AUA0000125635	EN							

Table of contents

DCS880 Drive Manuals 2

Safety instructions **4**

What this chapter contains 4
To which products this chapter applies 4
Usage of warnings and notes 4
Installation and maintenance work 4
Grounding 5
Printed circuit boards and fiber optic cables 5
Mechanical installation 6
Operation 6

Introduction to this manual **8**

Alternate firing (H8T) 8
Application 8
Related documents 8
Terms and abbreviations 9
Cybersecurity disclaimer 11

Alternate firing hardware (H8T) **12**

Type code 12
Type code units size H8T 13
Main circuit and control 14
Armature converter DCS880 H8T 14
Converters size H8T configuration 15
Cooling fans 16
Fan assignment for DCS880 16
Fan cable sizes and tightening torque connected at the fan terminals 16
Cross-sectional areas - Tightening torques 16
Current ratings - IEC non regenerative converters (S01) 17
Current measurement via a scope 17
2-Q units size H8T 18
Circuit diagram 20
Size H8T left-hand 21
Size H8T right-hand 22
Branch fuses installed inside converter size H8T 23

Alternate firing firmware **24**

Alternate firing service **26**

Current ratings 26

Fault Tracing Thyristors **27**

Drives size H8T 27
Blown fuses 27

Exchange thyristors size H8T **28**

Find faulty thyristor modules 28
Location of thyristors in frame H8T 30
Location of branch fuses frame H8T (busbars on the right) 31
Location of branch fuses frame H8T (busbars on the left) 32

Commissioning **33**

Safety instructions

What this chapter contains

This chapter contains the safety instructions you must follow when installing, operating and servicing the drive.
If ignored, physical injury or death may follow, or damage may occur to the drive, the motor/load or driven equipment. Read the safety instructions before you work on the unit.

To which products this chapter applies

The information is valid for the whole range of the product line DCS880, the converter modules DCS880-S0x size H1 … H8, field exciter units DCF80x, Rebuild Kit DCS880-R00, etc.

Usage of warnings and notes

There are two types of safety instructions throughout this manual: warnings and notes.
Warnings caution you about conditions which can result in serious injury or death and/or damage to the equipment, and advice on how to avoid the danger.
Notes draw attention to a particular condition or fact or give information on a subject.
The warning symbols are used as follows:

Dangerous voltage warning warns of high voltage which can cause physical injury or death and/or damage to the equipment.

General danger warning warns about conditions, other than those caused by electricity, which can result in physical injury or death and/or damage to the equipment.

Electrostatic sensitive devices warning warns of electrostatic discharge which can damage the equipment.

Installation and maintenance work

These warnings are intended for all who work on the drive, motor/load cable or motor/load. Ignoring the instructions can cause physical injury or death and/or damage to the equipment.

WARNING

- **Only qualified electricians are allowed to install and maintain the drive!**
- Never work on the drive, motor/load cable or motor/load when main power is applied.
- Always ensure by measuring with a multimeter (impedance at least 1 MΩ) that:
  - 1. Voltage between drive input phases U1, V1 and W1 and the frame is close to 0 V.
  - 2. Voltage between terminals C+ and D- and the frame is close to 0 V.
- Do not work on the control cables when power is applied to the drive or to the external control circuits. Externally supplied control circuits may cause dangerous voltages inside the drive even when the main power on the drive is switched off.
- Do not make any insulation resistance or voltage withstand tests on the drive or drive modules.
- Isolate the motor/load cables from the drive when testing the insulation resistance or voltage withstand of the cables or the motor/load.
- When reconnecting the motor/load cable, always check that the C+ and D- cables are connected with the proper terminal.

Notes:

- The motor/load cable terminals on the drive are at a dangerously high voltage when the main power is on, regardless of whether the motor/load is running or not.

- Depending on the external wiring, dangerous voltages (115 V, 220 V or 230 V) may be present on the relay outputs of the drive system (e.g. XRO1 … XRO3).
- DCS880 with enclosure extension: Before working on the drive, isolate the whole drive system from the supply.

Grounding

These instructions are intended for all who are responsible for the grounding of the drive. Incorrect grounding can cause physical injury, death and/or equipment malfunction and increase electromagnetic interference.

WARNING

- Ground the drive, motor/load and adjoining equipment to ensure personnel safety in all circumstances, and to reduce electromagnetic emission and pick-up.
- Make sure that grounding conductors are adequately sized and marked as required by safety regulations.
- In a multiple-drive installation, connect each drive separately to protective earth (PE ⏚).
- Minimize EMC emission and make a 360° high frequency grounding (e.g. conductive sleeves) of screened cable entries at the cabinet lead-through plate.
- Do not install a drive equipped with an EMC filter to an ungrounded power system or a high resistance-grounded (> 30 Ω) power system.

Notes:

- Power cable shields are suitable as equipment grounding conductors only when adequately sized to meet safety regulations.
- As the normal leakage current of the drive is higher than 3.5 mA_{AC} or 10 mA_{DC} a fixed protective earth connection is required.
- This product can cause a DC current in the protective earthing conductor. Where a residual current-operated protective (RCD) or monitoring (RCM) device is used for protection in case of direct or indirect contact, only an RCD or RCM of Type B is allowed on the supply side of this product.

Printed circuit boards and fiber optic cables

These instructions are intended for all who handle the circuit boards and fiber optic cables. Ignoring the following instructions can cause damage to the equipment.

WARNING

- The printed circuit boards contain components sensitive to electrostatic discharge. Wear a grounding wrist band when handling the boards. Do not touch the boards unnecessarily.
- Use grounding strip:

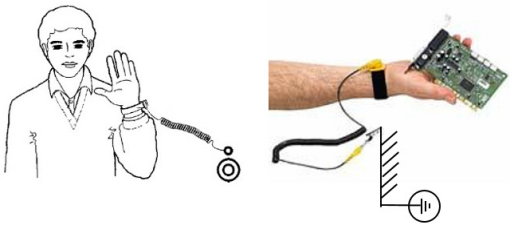

- ABB order no.: 3ADV050035P0001

WARNING

- Handle the fiber optic cables with care.
- When unplugging optic cables, always grab the connector, not the cable itself.
- Do not touch the ends of the fibers with bare hands as the fiber is extremely sensitive to dirt.
- The minimum allowed bend radius is 35 mm (1.38 in.).

Mechanical installation

These notes are intended for all who install the drive. Handle the unit carefully to avoid damage and injury.

WARNING

- DCS880 sizes H4 ... H8:
  - The drive is heavy. Lift the drive by lifting lugs only.
  - The drive’s center of gravity is high. Do not tilt the drive. The drive will overturn from a tilt of about 6 degrees. An overturning drive can cause physical injury.
  - Do not lift the drive by the front cover.
  - Place drives H4 … H6 only on their back.
- Make sure that dust from drilling does not enter the drive when installing. Electrically conductive dust inside the unit may cause damage or lead to malfunction.
- Ensure sufficient cooling.
- Do not fasten the drive by riveting or welding.

Operation

These warnings are intended for all who plan the operation of the drive or operate the drive. Ignoring the instructions can cause physical injury or death and/or damage to the equipment.

WARNING

- Before adjusting the drive and putting it into service, make sure that the motor/load and all driven equipment are suitable for operation throughout the speed/voltage range provided by the drive. The drive can be adjusted to operate the motor at speeds above and below the base speed.
- Do not control the motor/load with the disconnecting device (disconnecting mains); instead, use the control panel keys and , or commands via the I/O board of the drive.
- Mains connection:
  You can use a disconnect switch (with fuses) to disconnect the electrical components of the drive from the mains for installation and maintenance work. The type of disconnect switch used must be as per EN 60947-3, Class B, so as to comply with EU regulations, or a circuit-breaker type which switches off the load circuit by means of an auxiliary contact causing the breaker's main contacts to open. The mains disconnect must be locked in its "OPEN" position during any installation and maintenance work.
- EMERGENCY STOP buttons must be installed at each control desk and at all other control panels requiring an emergency stop function. Pressing the STOP button on the control panel of the drive will neither cause an emergency stop of the motor/load, nor will the drive be disconnected from any dangerous potential.
- To avoid unintentional operating states, or to shut the unit down in case of any imminent danger according to the standards in the safety instructions it is not sufficient to merely shut down the drive via signals "RUN", "drive OFF" or "Emergency Stop" respectively "control panel" or "PC tool".
- Intended use:
  The operating instructions cannot take into consideration every possible case of configuration, operation or maintenance. Thus, they mainly give such advice only, which is required by qualified personnel for normal operation of the machines and devices in industrial installations.
  If in special cases the electrical machines and devices are intended for use in non-industrial installations - which may require stricter safety regulations (e.g. protection against contact by children or similar) - these additional safety measures for the installation must be provided by the customer during assembly.

Note:

– When the control location is not set to Local (Local not shown in the status row of the display), the stop key on the control panel will not stop the drive. To stop the drive using the control panel, press the Loc/Rem key and then the stop key .

Introduction to this manual

This manual contains all additional information needed for DCS880 units size H8T using the alternate firing setup.

Alternate firing (H8T)

To increase the current of some DCS880 2-Q units size H8 the unused slots in the stacks have been used to add additional thyristors to create DCS880 2-Q units size H8T. Thus, the load current is shared between two thyristors in parallel. In other words the load current is shared between two forward bridges in parallel.
The drawing below shows an example:

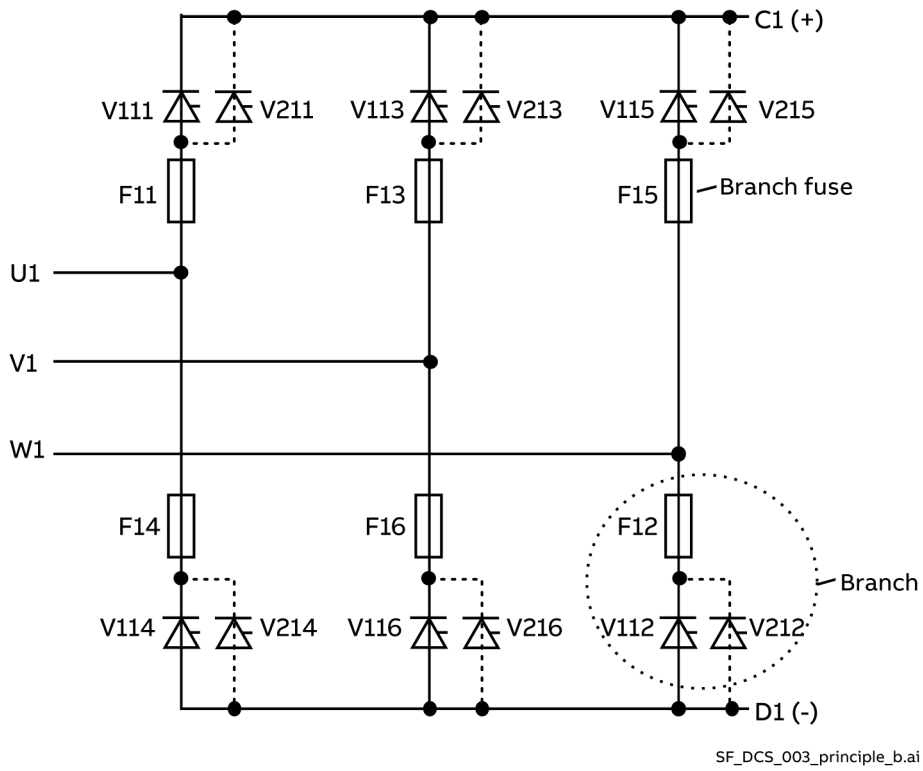

Be aware, that the parallel bridges do not conduct current at the same time. They are fired alternating every 360° electrical. So the cooling capacity of the thyristors is increased. Thus, also the load current can be increased.
Note: It is not possible to use units size H8T in hardparallel configurations.

Application

Alternate firing units are mainly used for hydrogen production.

Related documents

A list of related manuals is shown on the inside of the front cover under DCS880 Drive Manuals.
Note: The DCS880 Hardparallel manual (3ADW000530) is not valid for units size H8T.

Terms and abbreviations

Term/Abbreviation	Definition
AC 800M	Type of programmable controller manufactured by ABB.
ACS-AP-I	Types of control panel used with DCS880 drives.
ACS-AP-W	
Adaptive Program (AP)	Adaptive Program of the drive. See Adaptive programming, Application guide (3AXD50000028574)
AI	Analog input; interface for analog input signals.
AO	Analog output; interface for analog output signals.
Application program	Program written by the Automation Builder. See Drive (IEC61131-3) application programming manual (3AUA0000127808).
Automation Builder	Tool to write application programs. See Drive (IEC61131-3) application programming manual (3AUA0000127808).
Control unit	Contains the electronics and I/O connections of the drive. The control unit is connected to the power unit.
D2D	Drive-to-drive; communication link between drives.
DCS880	A product family of ABB drives.
DCSLink	Communication between the armature converter and the field exciters or 12-pulse communication.
DDCS	Distributed drives communication system. A protocol used in communication between ABB drive equipment.
DI	Digital input; interface for digital input signals.
DIO	Digital input/output; interface that can be used as a digital input or output.
DO	Digital output; interface for digital output signals.
Drive	Converter to control DC motors/loads.
DriveBus	A communication link used by, for example, ABB controllers. DCS880 drives can be connected to the DriveBus link of the controller.
DriveAP	Adaptive Programming of the drive. See Adaptive programming, Application guide (3AXD50000028574).
Drive Composer	PC tool for commissioning and maintenance of ABB drives.
EFB	Embedded fieldbus.
FAIO-01	Optional analog I/O extension module.
FBA	Fieldbus adapter.
FCAN-01	Optional CANopen adapter.
FCNA-01	Optional ControlNet adapter.
FDCO-0x	Optional DDCS communication module.
FDIO-01	Optional digital I/O extension module.
FDNA-01	Optional DeviceNet adapter.
FEA-03	Optional I/O extension module.
FECA-01	Optional EtherCAT® adapter.
FEN-01	Optional TTL encoder interface module.
FEN-11	Optional absolute encoder interface module.
FEN-21	Optional resolver interface module.
FEN-31	Optional HTL encoder interface module.
FENA-11	Optional Ethernet/IP, Modbus/TCP and PROFINET IO adapter.

Term/Abbreviation	Definition
FENA-21	Optional dual-port Ethernet/IP, Modbus/TCP and PROFINET IO adapter.
FEPL-02	Optional POWERLINK adapter.
FIO-01	Optional digital I/O extension module.
FIO-11	Optional analog I/O extension module.
FPBA-01	Optional PROFIBUS DP adapter.
FPTC-01	Optional thermistor protection module.
FPTC-02	Optional ATEX-certified thermistor protection module for potentially explosive atmospheres.
FSCA-01	Optional Modbus/RTU adapter.
FSO-21	Optional safety functions module.
FSPS-21	Optional PROFIsafe safety functions module.
HTL	High-threshold logic.
I/O	Input/Output.
ModuleBus	A communication link used by, for example, ABB controllers. DCS880 drives can be connected to the optical ModuleBus link of the controller.
Network control	With fieldbus protocols based on the Common Industrial Protocol (CIP™), such as DeviceNet and Ethernet/IP, denotes the control of the drive using the Net Ctrl and Net Ref objects of the ODVA AC/DC Drive Profile. For more information, see www.odva.org, and the following manuals: – FDNA-01 DeviceNet adapter module User's manual (3AFE68573360). – FENA-11/-21 Ethernet adapter module User's manual (3AUA0000093568).
Off3 (emergency stop)	Function in Drive: Off3 (emergency stop) with configurable deceleration time according to cat. 1.
OPL	Optical power link. Protocol used in communication between the control unit and the power unit.
Parameter	User-adjustable operation instruction to the drive.
PID controller	Proportional-integral-derivative controller. The speed control is based on a PID algorithm.
PLC	Programmable logic controller.
Power unit	Contains the power electronics and power connections of the drive. The control unit is connected to the power unit.
PTC	Positive temperature coefficient.
PU	See power unit.
RFG	Ramp function generator.
RO	Relay output; interface for a digital output signal. Implemented with a relay.
Signal	Value measured or calculated by the drive. It can also contain status information. Most signals are read-only, but some (especially counter-type signals) can be reset.
SS1	Safe stop 1.
SSI	Synchronous serial interface.
STO	Safe torque off.
TTL	Transistor-transistor logic.
UPS	Uninterruptible power supply: Power supply equipment with battery to maintain output voltage during power failure.

Cybersecurity disclaimer

This product is designed to be connected to and to communicate information and data via a network interface. It is the customer's sole responsibility to provide and continuously ensure a secure connection between the product and the customer network or any other network (as the case may be). The customer shall establish and maintain any appropriate measures (such as but not limited to the installation of firewalls, application of authentication measures, encryption of data, installation of anti-virus programs, etc.) to protect the product, the network, its system and the interface against any kind of security breaches, unauthorized access, interference, intrusion, leakage and/or theft of data or information. ABB and its affiliates are not liable for damages and/or losses related to such security breaches, any unauthorized access, interference, intrusion, leakage and/or theft of data or information.

Alternate firing hardware (H8T)

Type code

The type code contains information on the specification and configuration of the drive. The first digits from left show the basic configuration (e.g. DCS880-S01-2000). The optional selections are given thereafter on the name plate by plus code. The main selections are described below. Not all selections are available for all types.

The drive's basic type code: **DCS880-aab-cccc-ddef + plus code**			
Product family:	DCS880		
Product type:	aa	= S0	Standard converter module
		= R0	Rebuild kit
		= U1	Upgrade kit
		= A0	Enclosed converter
Bridge type:	b	= 1	Single bridge (2-Q)
		= 2	2 anti-parallel bridges (4-Q)
Module type:	cccc	=	Rated DC current (IP00)
Rated AC voltage:	dd	= 04	100 V_{AC} … 415 V_{AC}
		= 05	100 V_{AC} … 500 V_{AC} (IEC)/525 V_{AC} (UL)
		= 06	270 V_{AC} … 600 V_{AC}
		= 07	315 V_{AC} … 690 V_{AC}
		= 08	360 V_{AC} … 800 V_{AC}
		= 10	450 V_{AC} … 990 V_{AC}
		= 12	540 V_{AC} … 1200 V_{AC}
Power connection:	e	= X	Standard H1 … H7
		= L	Left side H8
		= R	Right side H8
Revision code:	f	= 0	1st generation
		= A	H7: fusing adaption due to UL certification
		= B	H5/H6: New cooling fan R2E250-RE04-10
Field exciter configuration:	+0S163		H1 ... H4 without OnBoard field exciter
	+S164		H5 and H6 with internal field exciter, supply external (H5 and H6: 25 A, Rebuild kit: 16 A/25 A)
Fan voltage:	Standard		Size H4 Fan voltage: 230 V/1-ph
Application programming:	+S551		Memory unit including drive application programming license
SDCS-DSL-H10:	+S521		1 DCSLink channel, 0 channels optical power link SDCS-DSL-H10
Voltage measurement:	+S185		SDCS-PIN-H51 configured for 20 V_{AC} ... 100 V_{AC} (H6 ... H8)
Control panel:	+0J404		Without control panel
	+J428		Daisy-chain option DPI-H01 kit
	+J429		Bluetooth control panel ACS-AP-W

The technical data and specifications are valid as of going to press. ABB reserves the right to make subsequent alterations.

Type code units size H8T

There are four units size H8T:
DCS880-S01-5230-05 good for 5200 A_{DC} continuous current when built in a cabinet.
DCS880-S01-5230-07 good for 5200 A_{DC} continuous current when built in a cabinet.
DCS880-S01-5230-08 good for 5200 A_{DC} continuous current when built in a cabinet.
DCS880-S01-4830-10 good for 4800 A_{DC} continuous current when built in a cabinet.

Main circuit and control

Armature converter DCS880 H8T

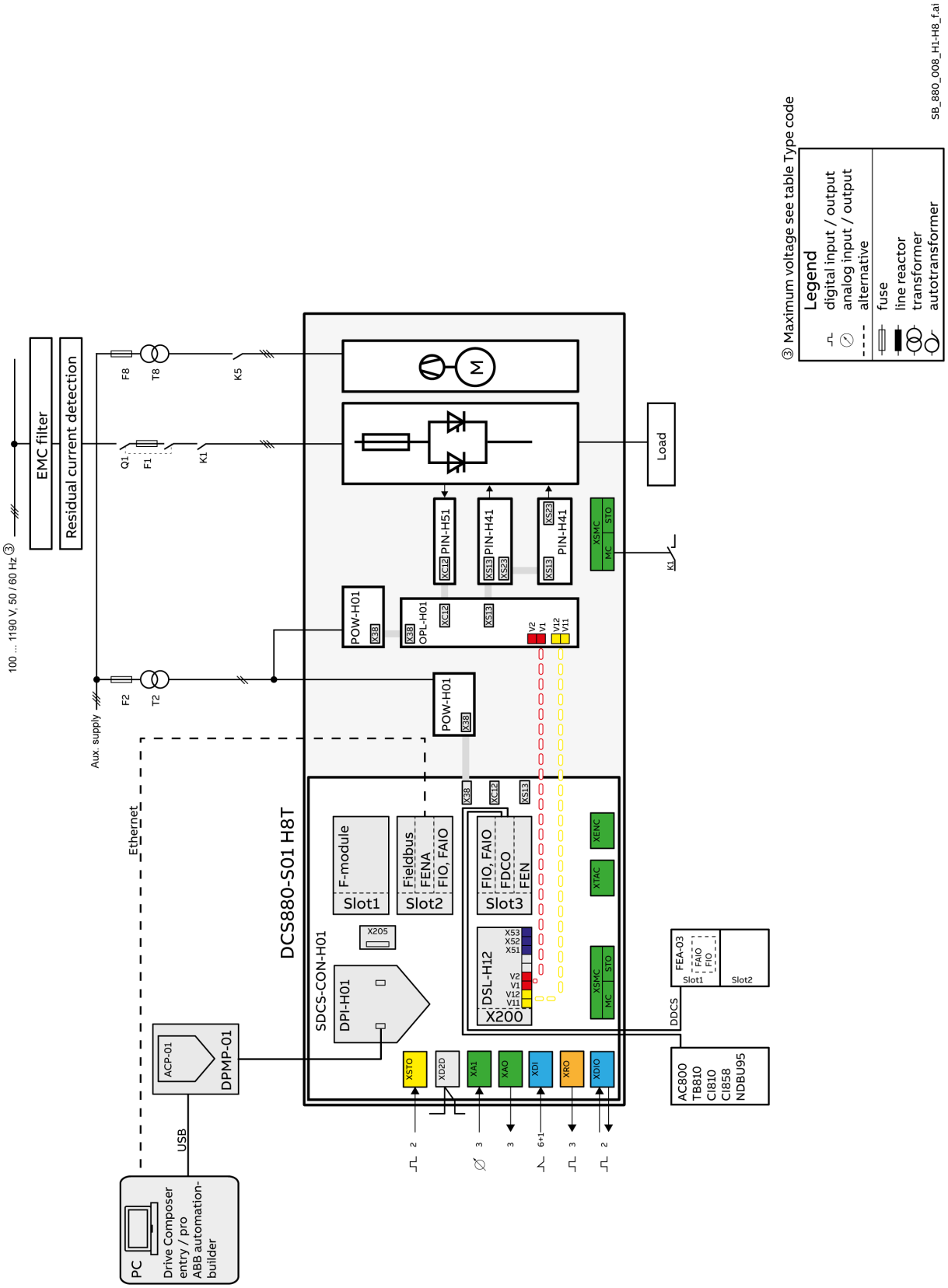

Converters size H8T configuration

Wiring the drive according to this diagram offers the highest degree of monitoring functions done by the drive.

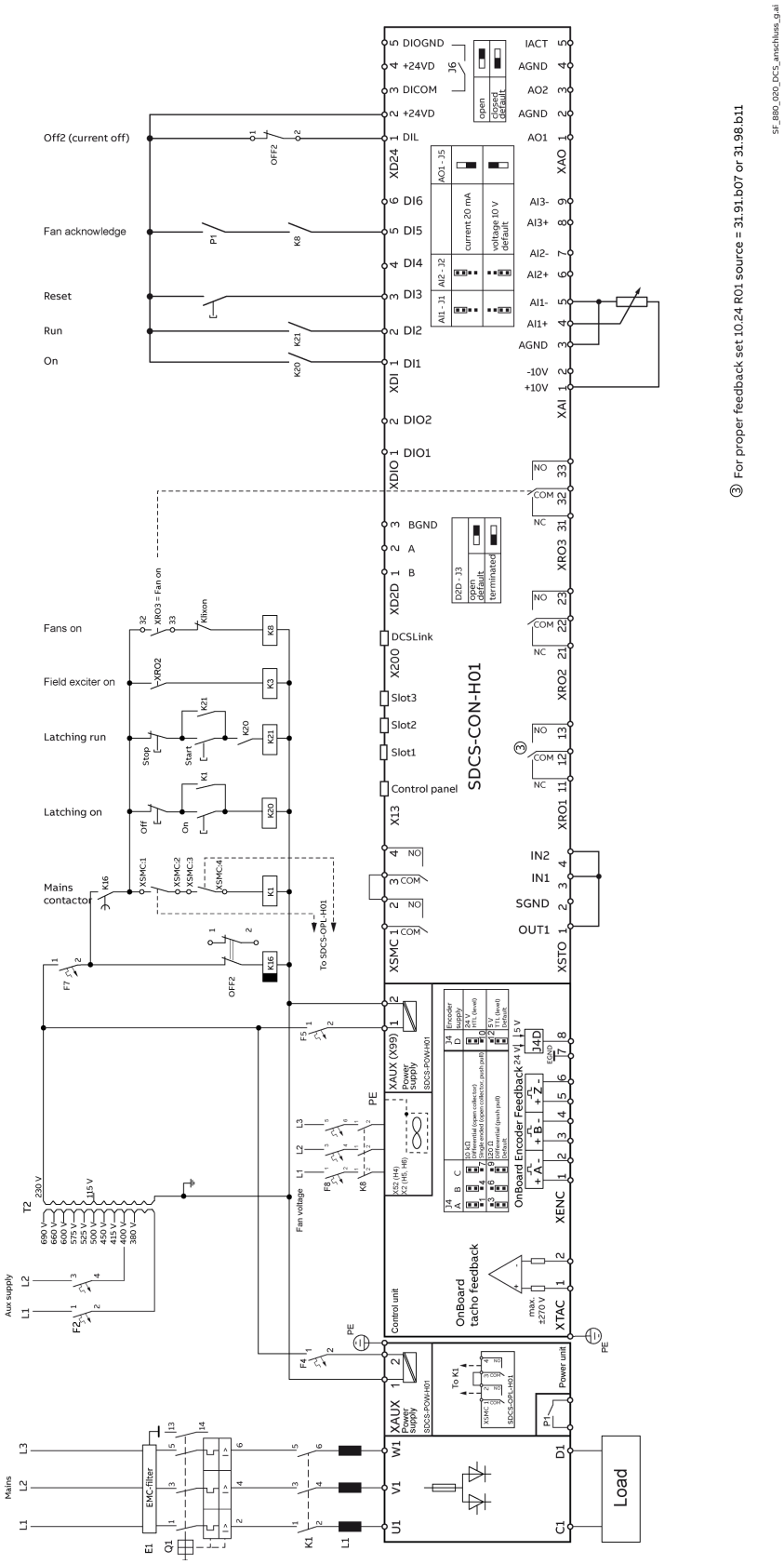

Cooling fans

Fan assignment for DCS880

Converter type	Size	Configuration	Fan type	Airflow built in [m³/h]
DCS880-S0b-2050-dd ... DCS880-S01-5230-dd	H8, H8T	7	GR35C-2DD 400 V @ 50 Hz or 460 V @ 60 Hz	4500

b = Bridge type
d = Rated AC voltage

Fan cable sizes and tightening torque connected at the fan terminals

Fan terminals are U1, V1, W1 for H8 and H8T.

Converter type	Flexible cable		Solid cable	
	max [mm²]	torque [Nm]	max [mm²]	torque [Nm]
DCS880-S0b-2050-dd ... DCS880-S01-5230-dd	0.5 … 1.5	0.6 … 0.8	0.5 … 1.5	0.6 … 0.8

b = Bridge type
d = Rated AC voltage

Cross-sectional areas - Tightening torques

Recommended cross-sectional area according to DINVDE 0276-1000 and DINVDE 0100-540 (PE) in a trefoil arrangement, up to 50°C ambient temperature. The necessary wire torque at 60°C wire temperature is the same as recommended in the following table.

Converter type	C1, D1			U1, V1, W1		PE		
		1	(2.)					
	I_{DC} [A-]	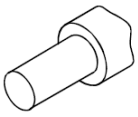 [mm²]	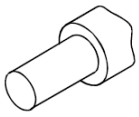 [mm²]	I_V [A~]	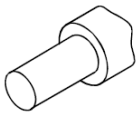 [mm²]	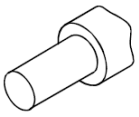 [mm²]	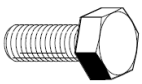	[Nm]
DCS880-S01-4830-10 ①	4800	8 x 300	-	3876	6 x 300	3 x 300	4 x M12	50
DCS880-S01-5230-dd ①	5200	8 x 300	-	4202	6 x 300	3 x 300	4 x M12	50

① Reduced ambient temperature 40°C.
d = Rated AC voltage

Current ratings - IEC non regenerative converters (S01)

Unit type	IDC I	IDC II		IDC III		IDC IV		Size	Internal field current
2-Q converters	continuous	100 % 15 min	150 % 60 s	100 % 15 min	150 % 120 s	100 % 15 min	200 % 10 s		
500 V (IEC)/525 V (UL)	[A]	[A]		[A]		[A]			
DCS880-S01-5230-05	5200	No overload						H8T	-
690 V									
DCS880-S01-5230-07	5200	No overload						H8T	-
800 V									
DCS880-S01-5230-08	5200	No overload						H8T	-
990 V									
DCS880-S01-4830-10	4800	No overload						H8T	-

Note: AC current $I_{AC} = 0.82 * I_{DC}$.

Current measurement via a scope

Make sure to set 29.62 Alternate firing = Alternate 1 SDCS-OPL-H01.

Attention: The current must be measured using a scope. It is not possible to check for proper function using 01.75 27.05 Motor current fast, 01.81 Motor current 500 µs or 27.05 Motor current.

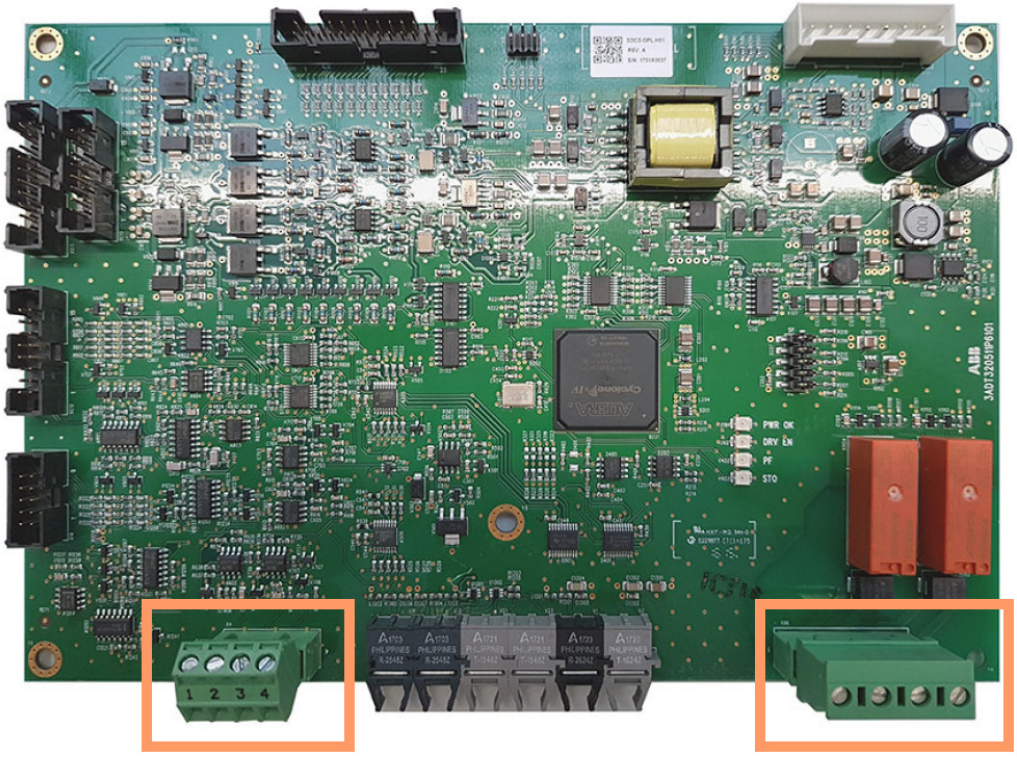

Current measurement via scope		Mains contactor

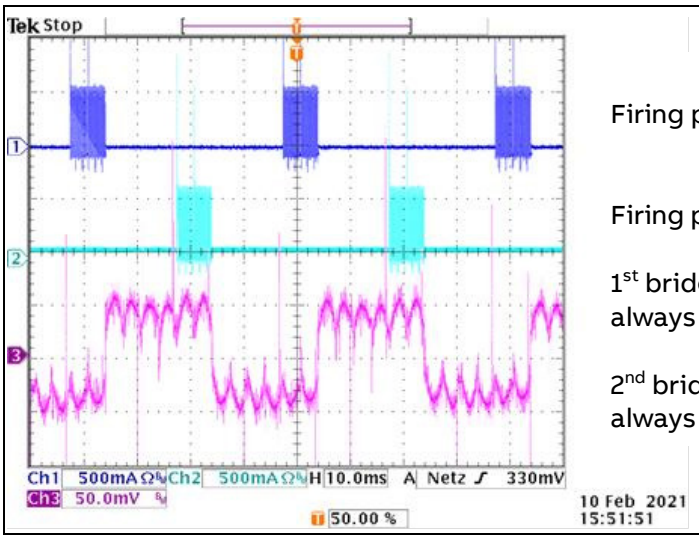

Firing pulses 2nd bridge (V211 … V216).

Firing pulses 1st bridge (V111 … V116).

1st bridge (V111 … V116) current is always shown as positive current.

2nd bridge (V211 … V216) current is always shown as negative current.

2-Q units size H8T

To increase the current of some DCS880 2-Q units size H8 the unused slots in the stacks have been used to add additional thyristors to create DCS880 2-Q units size H8T. Thus, the load current is shared between two thyristors in parallel. In other words the load current is shared between two forward bridges in parallel.

Circuit diagram

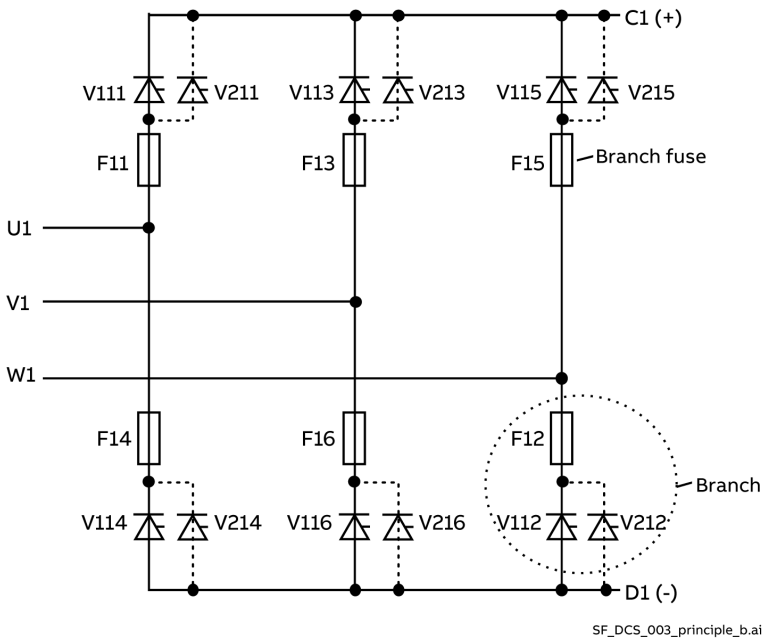

Note: Vyz: Standard units.
(Vxyz): H8T (alternate firing) units.

x: Parallel numbers of thyristors.
For alternate firing 1 and 2.
y: 1 forward bridge, 2 reverse bridge.
For alternate firing only 1 forward bridge.
z: Normal firing sequence number.

Connection between firing board and control board

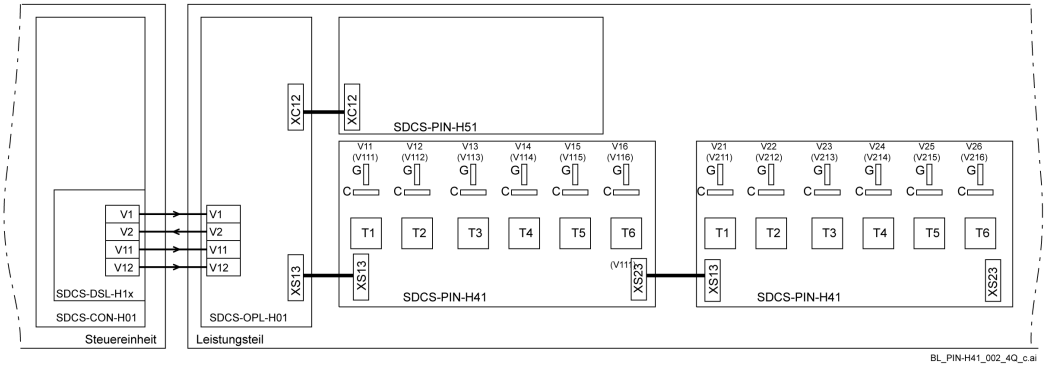

Note: H8T (alternate firing) connections are shown in brackets.

Location of the thyristors in the frame

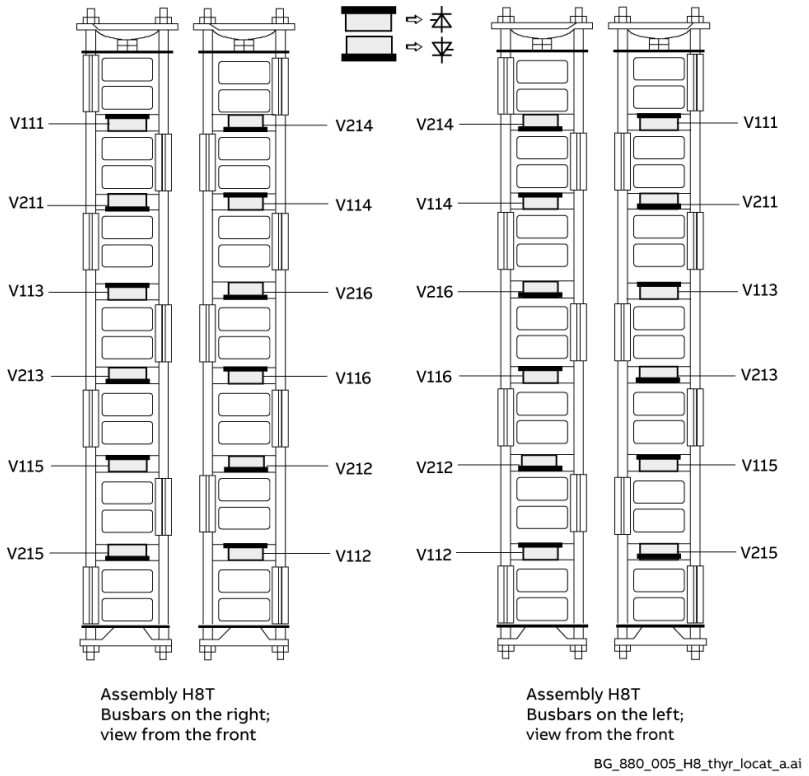

Note: Vyz: Standard units.
(Vxyz): H8T (alternate firing) units.

x: Parallel numbers of thyristors. For alternate firing 1 and 2.
y: 1 forward bridge, 2 reverse bridge. For alternate firing only 1 forward bridge.
z: Normal firing sequence number

Circuit diagram

Typical armature circuit diagram for module size H8T with SDCS-PIN-H51 and SDCS-PIN-H41:

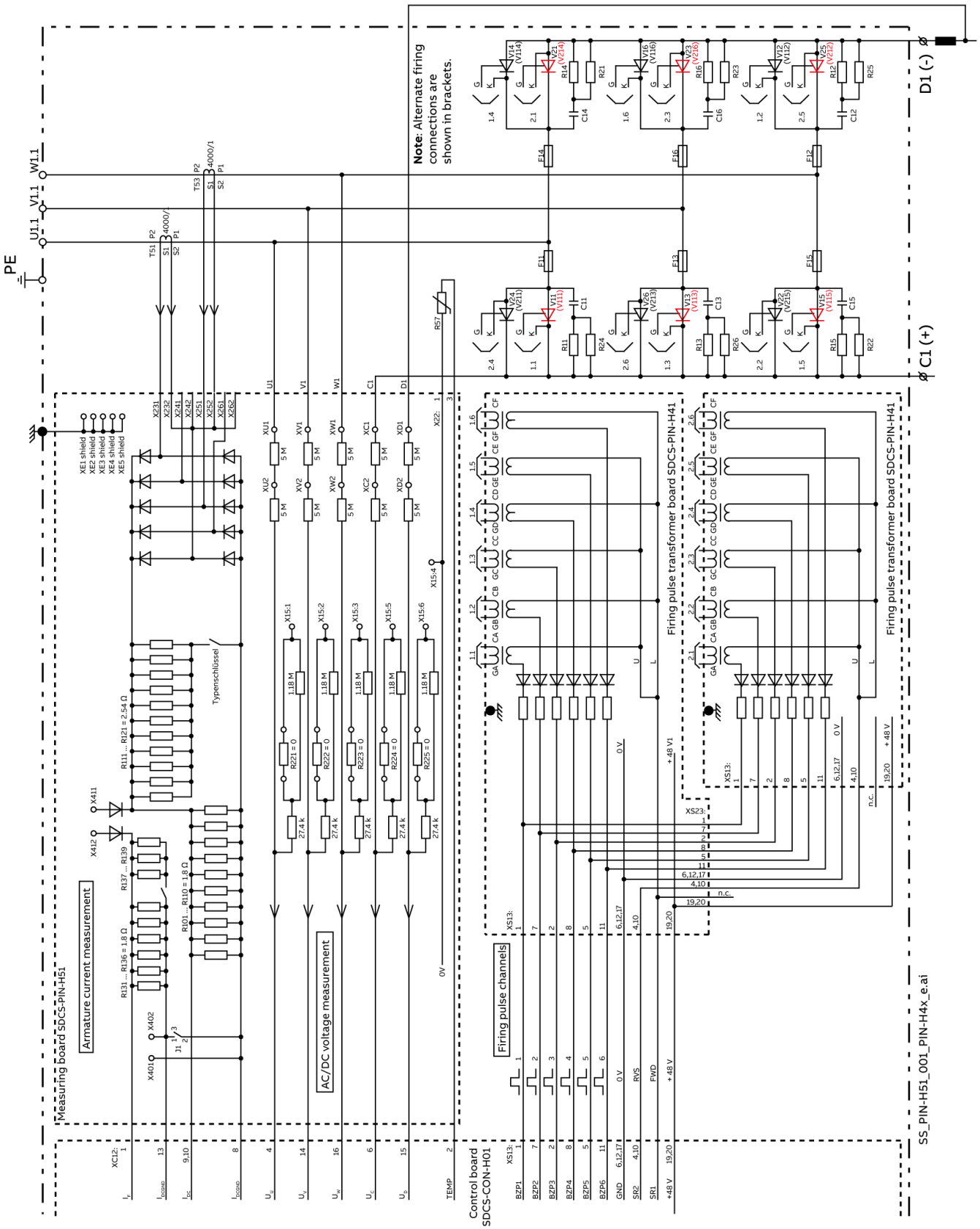

Size H8T left-hand (+P906)

DCS880-S01-4830-ddL
DCS880-S01-5230-0dL
With external control unit (+P906)

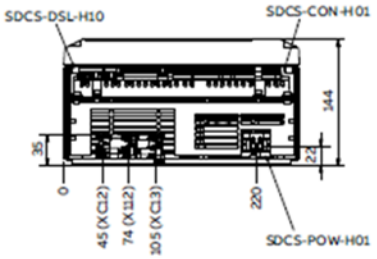

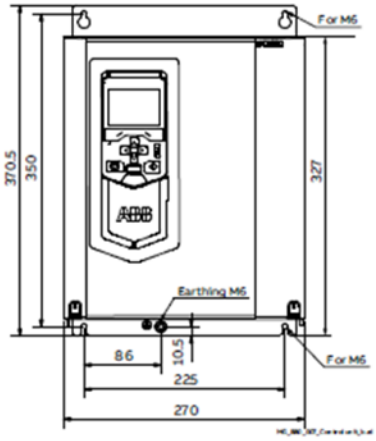

Control unit

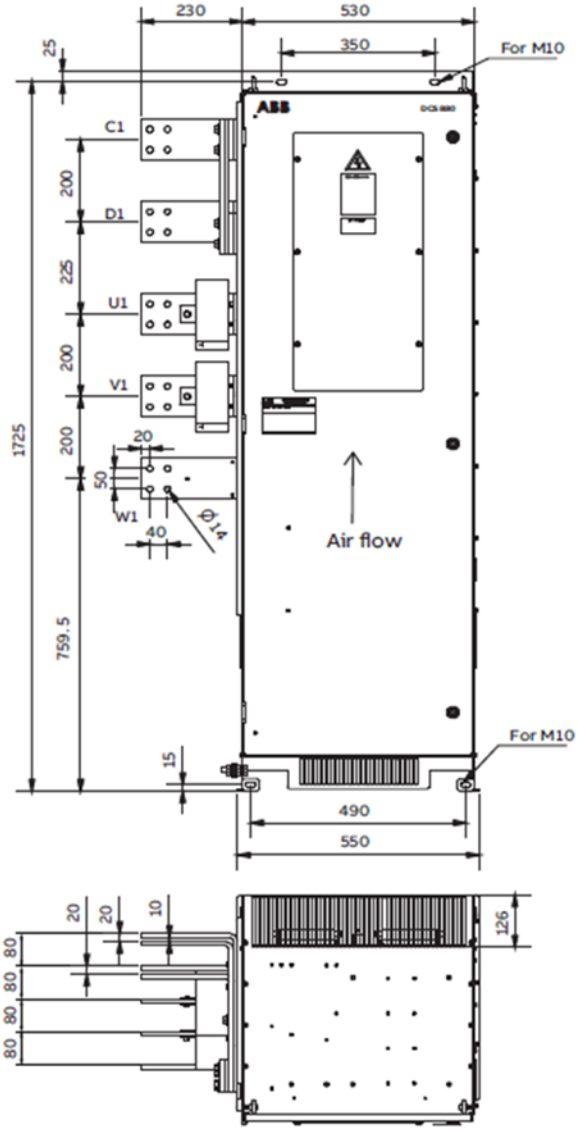

Power unit

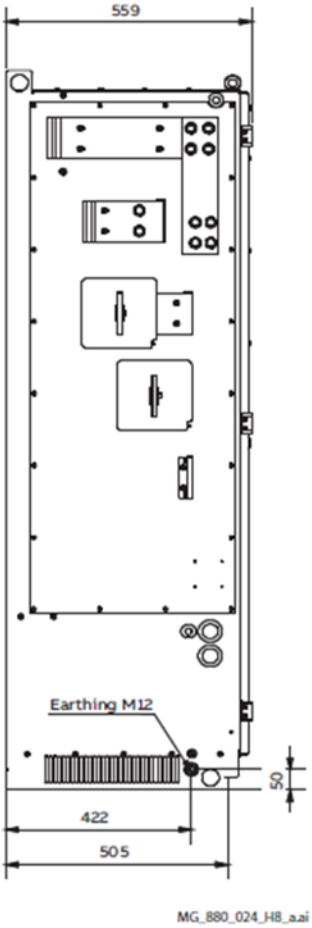

Busbars in mm:
AC: 100 x 10
DC: 2 x (100 x 10)

Size H8T right-hand (+P906)

DCS880-S01-4830-ddR
DCS880-S01-5230-0dR
With external control unit (+P906)

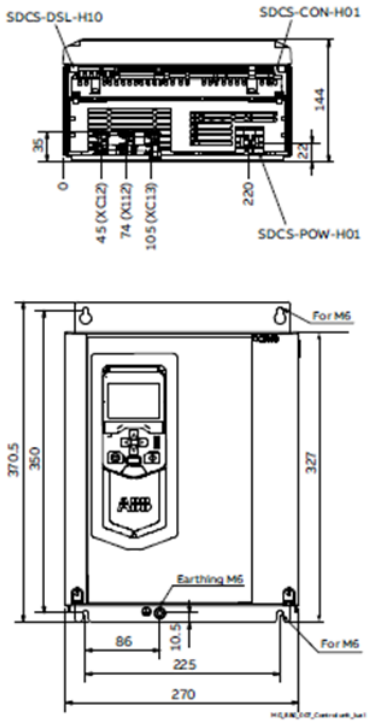

Control unit

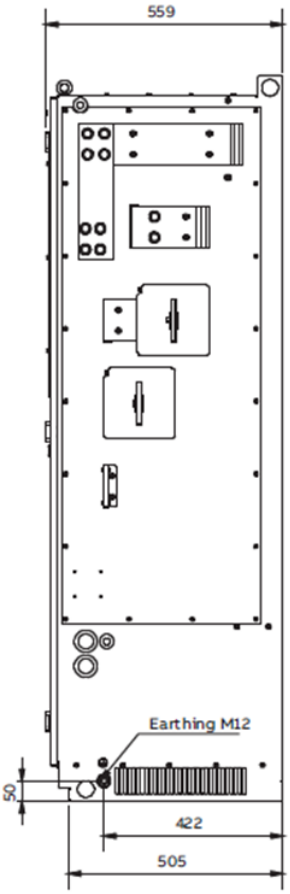

Busbars in mm:
AC: 100 x 10
DC: 2 x (100 x 10)

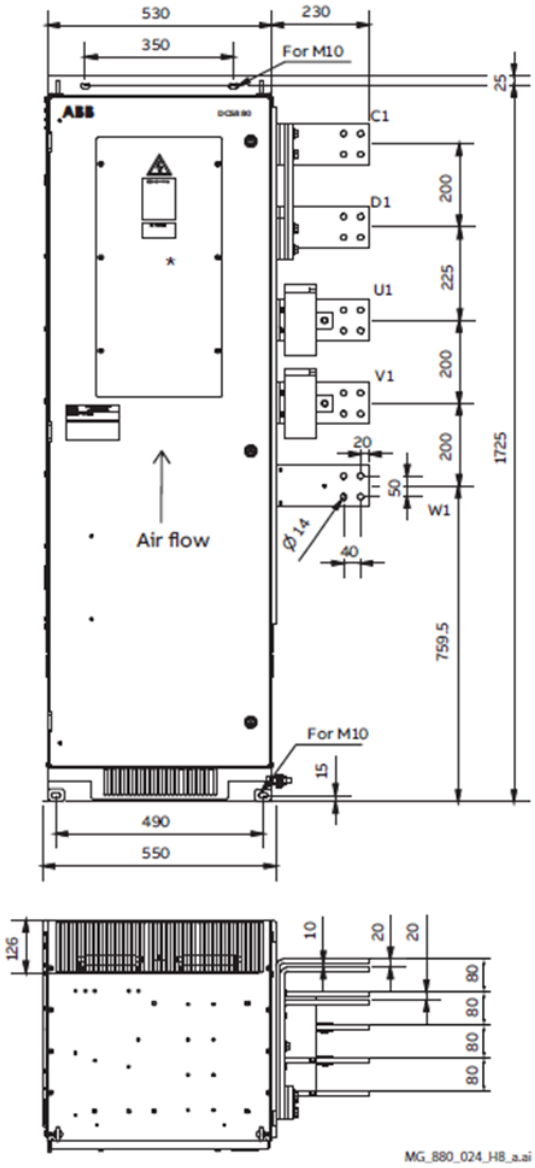

Power unit

Branch fuses installed inside converter size H8T

Size	Converter type	Fuse type	Fuse Size
	500 V (IEC)/525 V (UL)		
H8T	DCS880-S01-5230-05	UR 3500 A/690 V	7
	690 V		
H8T	DCS880-S01-5230-07	UR 3500 A/690 V	7
	800 V		
H8T	DCS880-S01-5230-08	UR 3500 A/690 V	7
	990 V		
H8T	DCS880-S01-4830-10	UR 3000 A/1000 V	8

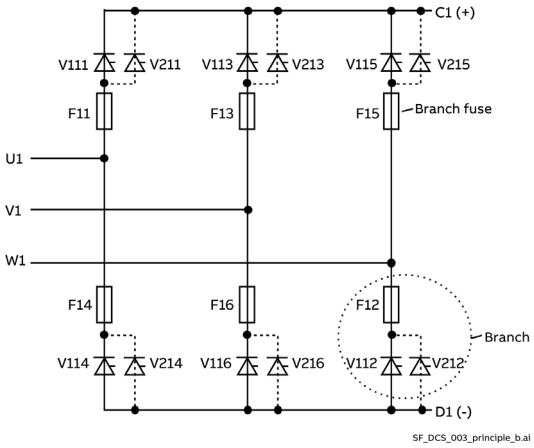

Size 7, 8

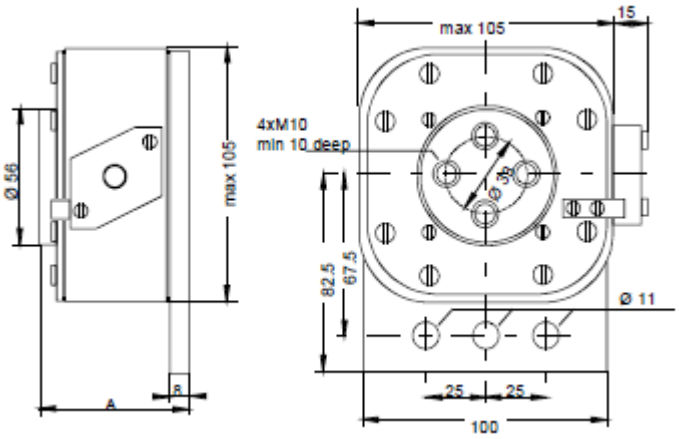

Size	A [mm]
7	62
8	90

Note: The given dimensions may be exceeded in some cases. Please take them only for information.

Alternate firing firmware

Index	Name						
	Text						
	Range	Default	Unit	Scale/FbEq16	Volatile	Change running	Type
29.62	**Alternate firing**						
	Alternate firing of 2 parallel bridges. To increase the current of some DCS880 2-Q units size H8 the unused slots in the stacks have been used to add additional thyristors to create DCS880 2-Q units size H8T. Thus, the load current is shared between two thyristors in parallel. In other words the load current is shared between two forward bridges in parallel. Following 4 units size H8T are available: – DCS880-S01-5230-05. – DCS880-S01-5230-07. – DCS880-S01-5230-08. – DCS880-S01-4830-10. 0: **Standard**; standard firing pattern. 1: **Alternate 2 SDCS-OPL-H01**; alternate firing pattern using 2 SDCS-OPL-H01 in the power unit. 2: **Alternate 1 SDCS-OPL-H01**; alternate firing pattern using 1 SDCS-OPL-H01 in the power unit.						
	0 … 1	Standard	-	1 = 1	n	y	Parameter

95.25	**Set: Type code**
	Set the type code of the drive. Contains the drive's current-, voltage-, temperature measurement and its quadrant type. 95.25 Set: Type code is preset in the factory and is write protected. To enable use 95.24 Service mode = Set Type code. The change of the type code is immediately taken over. 95.24 Service mode = Set Type code must be set back to Normal mode by the user. 0: **None**; the type code is set by the user, see 95.26 Set: Drive block bridge 2, 95.27 Set: Drive DC current scaling, 95.28 Set: Drive AC voltage scaling and 95.29 Set: Drive max bridge temperature e.g. for rebuild kits. 1: **S01-0020-04**; type code, see table. … 520: **S02-5200-05**; type code, see table.

The drive's basic type code: **DCS880-aab-cccc-ddef + plus code**			
Product family:	DCS880		
Product type:	aa	= S0	Standard converter module
		= R0	Rebuild kit
		= U1	Upgrade kit
		= A0	Enclosed converter
Bridge type:	b	= 1	Single bridge (2-Q)
		= 2	2 anti-parallel bridges (4-Q)
Module type:	cccc	=	Rated DC current (IP00)
Rated AC voltage:	dd	= 04	100 V_{AC} … 415 V_{AC}
		= 05	100 V_{AC} … 500 V_{AC} (IEC)/525 V_{AC} (UL)
		= 06	270 V_{AC} … 600 V_{AC}
		= 07	315 V_{AC} … 690 V_{AC}
		= 08	360 V_{AC} … 800 V_{AC}
		= 10	450 V_{AC} … 990 V_{AC}
		= 12	540 V_{AC} … 1190 V_{AC}

Power connection:	e	= X	Standard H1 … H7
		= L	Left side H8
		= R	Right side H8
Revision code:	f	= 0	1st generation
		= A	H7: Fusing adaption due to UL certification
		= B	H5/H6: New cooling fan R2E250-RE04-10

Attention: When using H1 … H5 modules the current and voltage range of the type code setting is limited to max 1190 A_{DC} and max 600 V_{AC}.

0 … 520	None	-	1 = 1	n	n	Parameter

Alternate firing service

Current ratings

Unit size	2-Q rated current DCS880-01 [A_{DC}]	4-Q rated current DCS880-02 [A_{DC}]	Supply voltage [V_{AC}]						
			400	525	600	690	800	990	1200
	4830							X	
	5230			X		X	X		

Fault Tracing Thyristors

Drives size H8T

These drives are equipped with fuses in the branches of the power part.

– The drive must be disconnected from the mains.

Blown fuses

– Make sure, that the connection to the motor/load is open (e.g. disconnect motor/load cables).
– Using the OHM function of a normal multimeter, measurements must be made from each AC terminal to each DC terminal (U1 to C1, V1 to C1, W1 to C1, U1 to D1, V1 to D1 and W1 to D1.
– In case of a blown fuse, the faulty thyristor or the faulty pair of thyristors are already isolated at one side from the others and therefore the faulty branch is known:

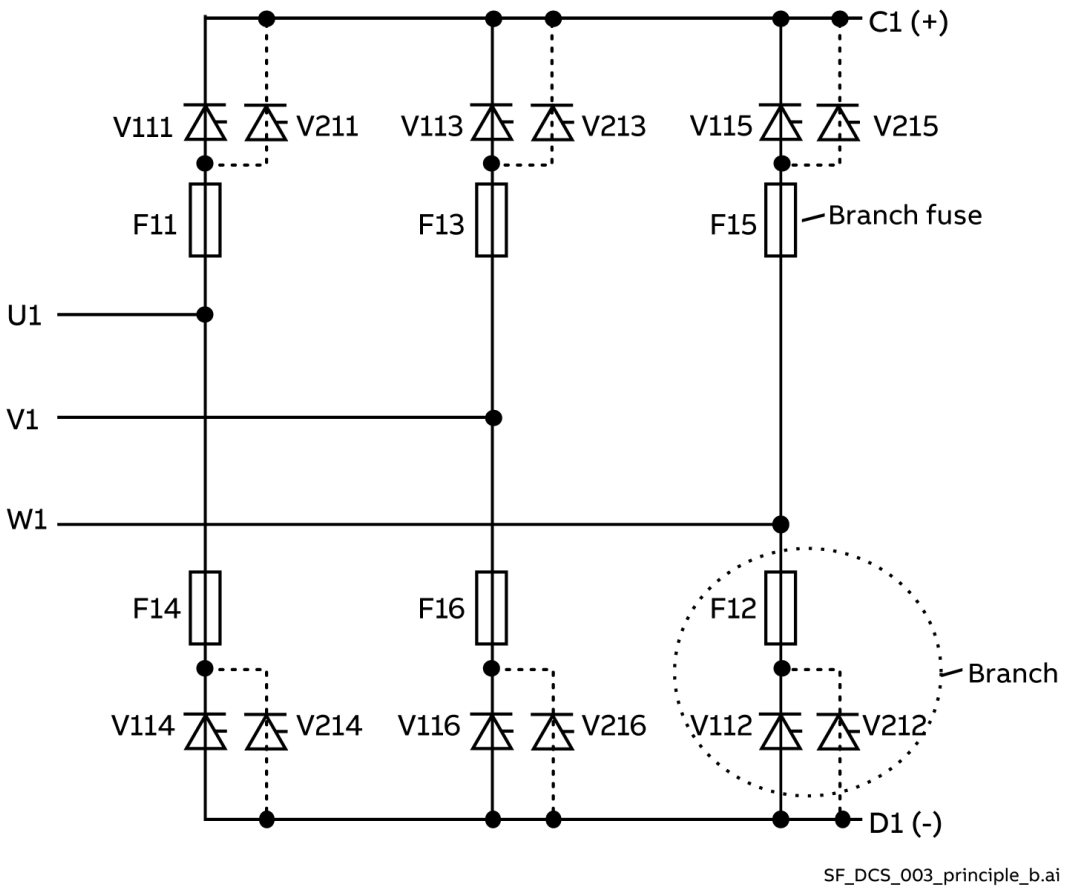

Bridge configuration H8T

– Normally, each measurement should show high resistance (> 1 kOhm).
– Target: Find a short circuit, indicated by low resistance (< 1 Ohm) (destroyed thyristor).
– For size H8T the OHM test should be performed when the thyristor is still clamped. Outside the drive a special thyristor clamping device is needed.
  Continue with related part *Exchange of Thyristors for Size* H8T section *Find faulty thyristor*.
– After a thyristor was replaced, the OHM test should be done another time to make sure that all faulty thyristors have been detected! If the motor/load is still connected to the drive the result of the measurement may be wrong.

Exchange thyristors size H8T

Find faulty thyristor modules

1. Check the branch fuses by performing an OHM test.
2. Find the defective branches by performing an OHM test (both polarities) between U1, V1, W1 and C1, D1.

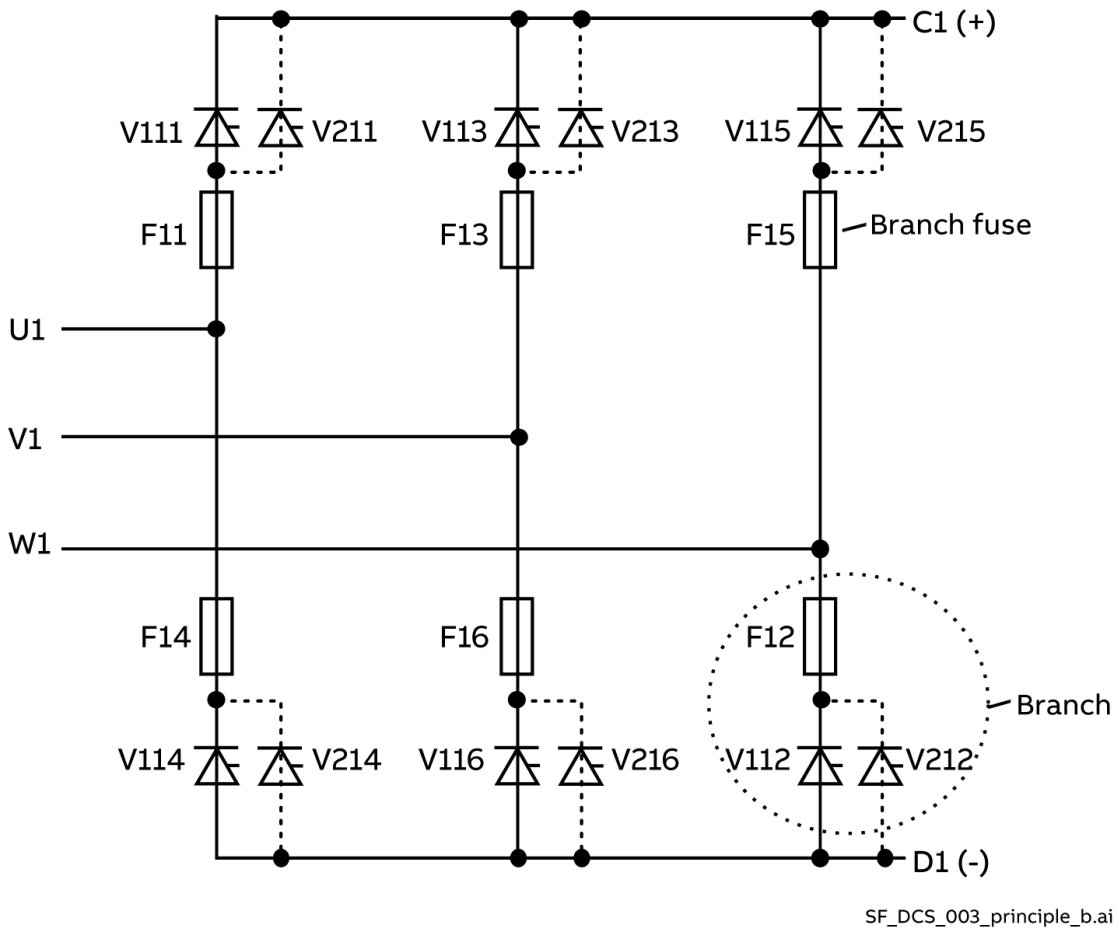

Bridge configuration H8T

3. Remove the AC busbars, of the defective branches.

Alternate firing drive:

4. Remove all screws of the DC - busbars either above or below the fuses of the defective branches.
   Note:
   The connection is made with a screw socket, which may fall down, when all screws are removed.

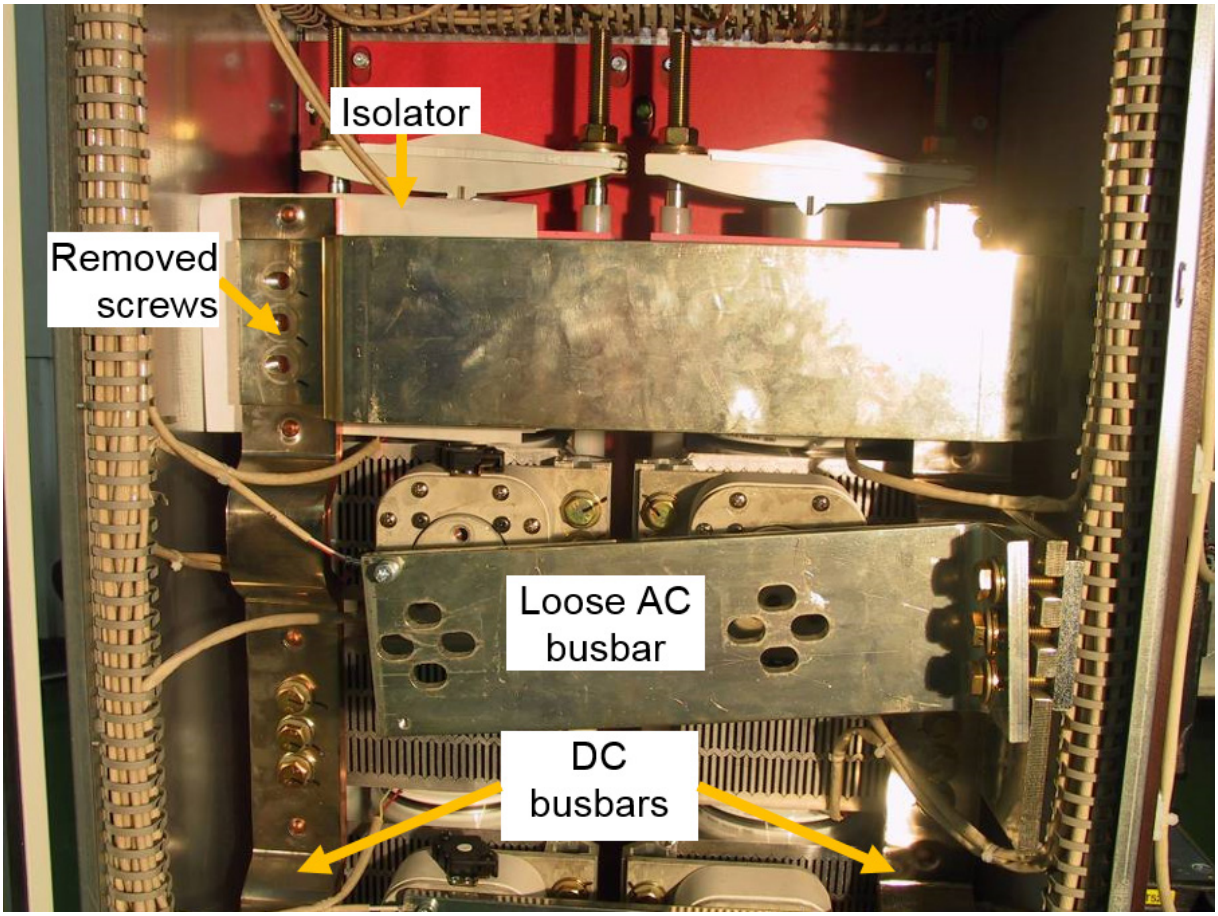

5. Put a small piece of isolator (e.g. paper) between the DC-busbar and the heat sink to insulate the parallel thyristors from each other.
6. Find the defective thyristors by performing an OHM test (both polarities) over their heat sinks.

Note:
Because “Disc Type” semiconductors need a certain compression force to operate properly, a measurement outside the clamped heat sinks might be wrong. To be sure which thyristor is broken change only one thyristor, clamp the heat sinks again and repeat step three.

Location of thyristors in frame H8T

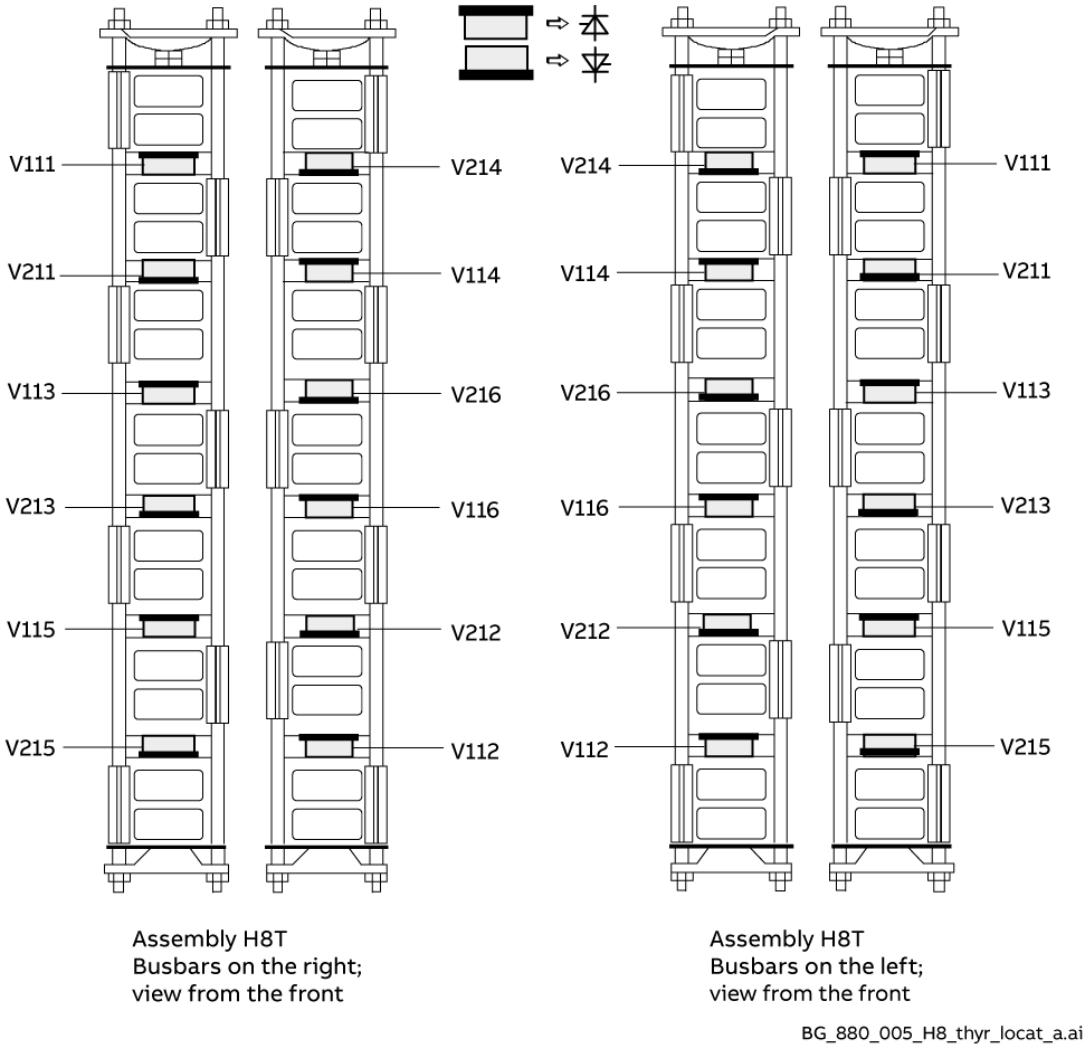

Location of branch fuses frame H8T (busbars on the right)

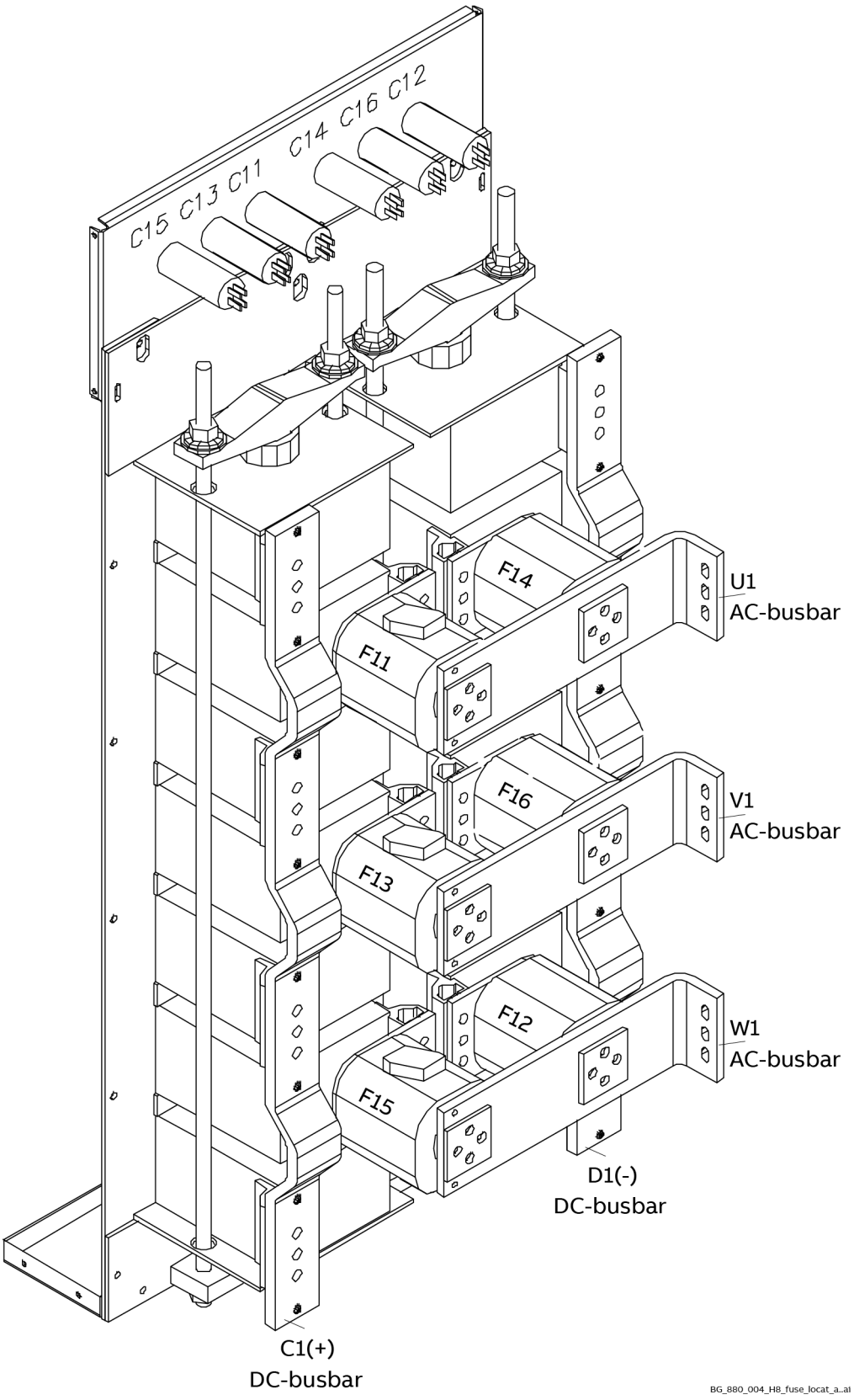

Location of branch fuses frame H8T (busbars on the left)

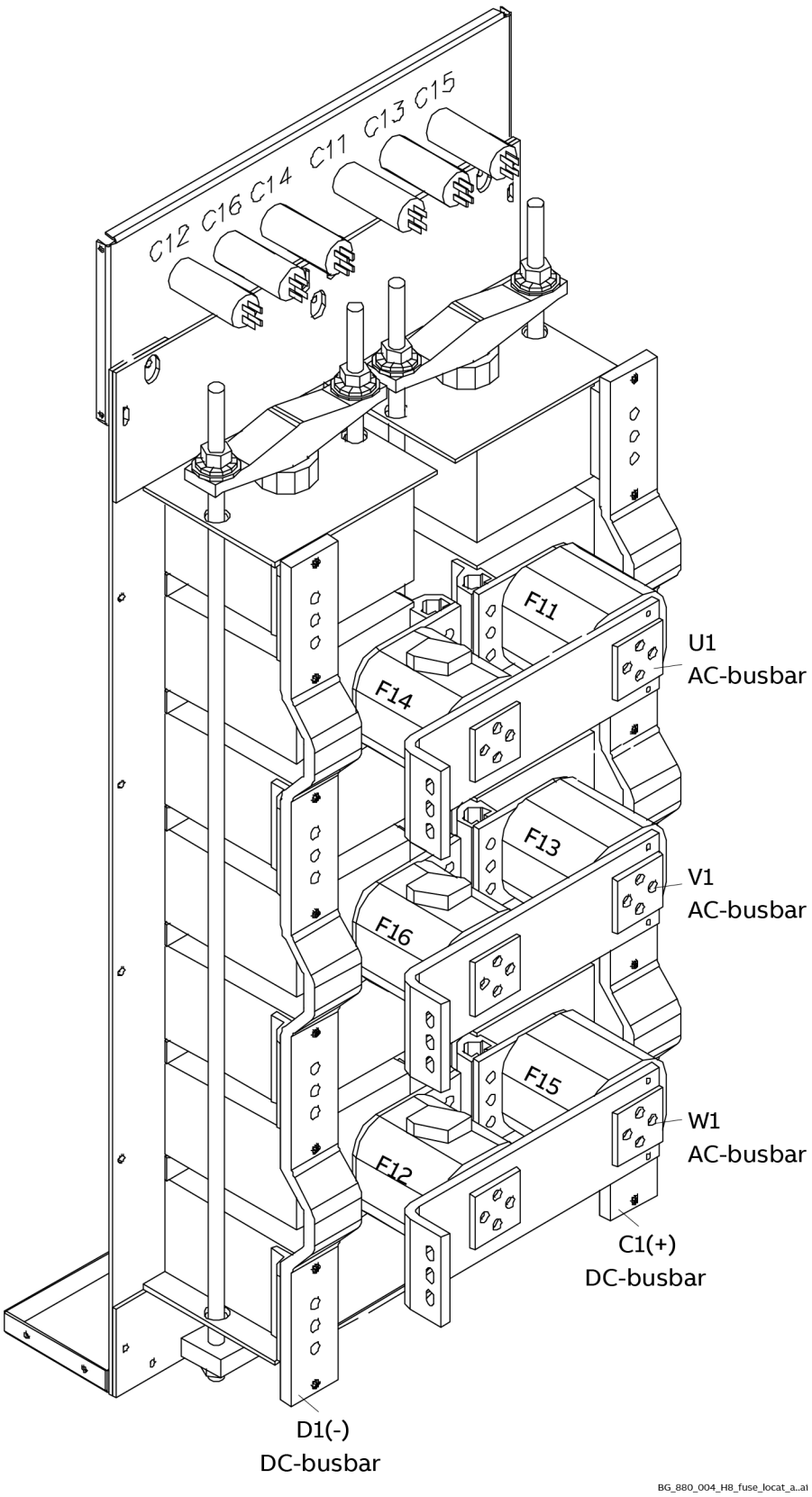

Commissioning

For alternate firing units follow the standard commissioning procedures.
Note: Set 29.62 Alternate firing = Alternate 1 SDCS-OPL-H01.

DCS Family

DCS550-S modules
The compact drive for machinery application

20 ... 1,000 A_{DC}
0 ... 610 V_{DC}
230 ... 525 V_{AC}
IP00

- Compact
- Robust design
- Adaptive and winder program
- High field exciter current

DCS880 modules
For safe productivity

20 ... 5,200 A_{DC}
0 ... 1,500 V_{DC}
230 ... 1,200 V_{AC}
IP00

- Safe torque off (STO) built in as standard
- Compact and robust
- Single drives, 20 A_{DC} to 5,200 A_{DC}, up to 1,500 V_{DC}
- IEC 61131 programmable
- Intuitive control panel and PC tool with USB connection and start up assistant
- Wide range of options to serve any DC motor application

DCS880-A enclosed converters
Complete drive solutions

20 ... 20,000 A_{DC}
0 ... 1,500 V_{DC}
230 ... 1,200 V_{AC}
IP21 – IP54

- Suitable for motoric and non motoric applications (e.g. electrolysis & hydrogen production)
- Individually adaptable to customer requirements
- User-defined accessories like external PLC or automation systems can be included
- High power solutions in 6- and 12-pulse up to 20,000 A_{DC}, 1,500 V_{DC}
- In accordance to usual standards
- Individually factory load tested
- Detailed documentation

DCT880 modules
Thyristor power controller

20 ... 4,200 A_{AC}
110 ... 990 V_{AC}
IP00

- Precise power control in industrial heating applications
- Two or three phase devices
- Power optimizer for peak load reduction
- Built on ABB's all-compatible drives architecture
- Intuitive control panel and PC tool with USB connection and start up assistant
- Application control programs and drive application programming with IEC 61131 programming

ABB AG
Wallstadter-Straße 59
68526 Ladenburg • Germany
Tel: +49 (0) 6203-71-0
Mail: dc-drives@de.abb.com
Web: www.abb.com/dc-drives

792R0101A2180000

Ident. No.: 3ADW000792R0101 Rev A
05.2022