DUS Daten- und Steuerungstechnik GmbH
Hinterm Liesch 33 • D-57250 Netphen Dreis-Tiefenbach

info@dus-gmbh.de
http://www.dus-gmbh.de

Company	DUS Daten- und Steuerungstechnik GmbH
Street	Hinterm Liesch 33
City	D-57250 Netphen Dreis-Tiefenbach

http://www.abb.com

Project	18-204
Project description	18-204
Status	07-2018
Created with	EPLAN Electric P8 2.7.3.11647

Manufacturer (Company)	DUS Daten- und Steuerungstechnik GmbH
Responsible for project	Thomas Göbel

Created on	04.07.2018	by (short name)	TGO
Edit date	10.07.2018	by (short name)	TGO

Number of pages 127

Table of contents

Page	Sheet	Page description	Date	Last editor
==ABB=DOC/1	1	Title page / cover sheet	10.07.2018	TGO
==ABB=DOC/2	2	Table of contents	10.07.2018	TGO
==ABB=DOC/2.a	3	Table of contents	10.07.2018	TGO
==ABB=DOC/2.b	4	Table of contents	10.07.2018	TGO
==ABB=DOC/2.c	5	Table of contents	10.07.2018	TGO
==ABB=AC500+CM579-ETHCAT/1	6	CM579-ETHCAT	10.07.2018	TGO
==ABB=AC500+CM579-ETHCAT/2	7	CM579-ETHCAT	10.07.2018	TGO
==ABB=AC500+CM579-ETHCAT/3	8	CM579-ETHCAT	10.07.2018	TGO
==ABB=AC500+CM579-ETHCAT/4	9	CM579-ETHCAT	10.07.2018	TGO
==ABB=AC500+CM579-ETHCAT/5	10	Parts list	10.07.2018	TGO
==ABB=AC500+CM582-DP/1	11	CM582-DP	10.07.2018	TGO
==ABB=AC500+CM582-DP/2	12	CM582-DP	10.07.2018	TGO
==ABB=AC500+CM582-DP/3	13	CM582-DP	10.07.2018	TGO
==ABB=AC500+CM582-DP/4	14	CM582-DP	10.07.2018	TGO
==ABB=AC500+CM582-DP/5	15	Parts list	10.07.2018	TGO
==ABB=AC500+DO526/1	16	DO526	10.07.2018	TGO
==ABB=AC500+DO526/2	17	DO526	10.07.2018	TGO
==ABB=AC500+DO526/3	18	DO526	10.07.2018	TGO
==ABB=AC500+DO526/4	19	DO526	10.07.2018	TGO
==ABB=AC500+DO526/6	20	DO526	10.07.2018	TGO
==ABB=AC500+DO526/7	21	DO526	10.07.2018	TGO
==ABB=AC500+DO526/8	22	Parts list	10.07.2018	TGO
==ABB=AC500+PM582/1	23	PM582	10.07.2018	TGO
==ABB=AC500+PM582/2	24	PM582	10.07.2018	TGO
==ABB=AC500+PM582/3	25	PM582	10.07.2018	TGO
==ABB=AC500+PM582/4	26	PM582	10.07.2018	TGO
==ABB=AC500+PM582/5	27	PM582	10.07.2018	TGO
==ABB=AC500+PM582/6	28	Parts list	10.07.2018	TGO
==ABB=AC500+PM590_ARCNET/1	29	PM590_ARCNET	10.07.2018	TGO
==ABB=AC500+PM590_ARCNET/2	30	PM590_ARCNET	10.07.2018	TGO
==ABB=AC500+PM590_ARCNET/3	31	PM590_ARCNET	10.07.2018	TGO
==ABB=AC500+PM590_ARCNET/4	32	PM590_ARCNET	10.07.2018	TGO
==ABB=AC500+PM590_ARCNET/5	33	PM590_ARCNET	10.07.2018	TGO
==ABB=AC500+PM590_ARCNET/6	34	Parts list	10.07.2018	TGO
==ABB=AC500+PM5630-2ETH/1	35	PM5630-2ETH	10.07.2018	TGO
==ABB=AC500+PM5630-2ETH/2	36	PM5630-2ETH	10.07.2018	TGO
==ABB=AC500+PM5630-2ETH/3	37	PM5630-2ETH	10.07.2018	TGO
==ABB=AC500+PM5630-2ETH/4	38	PM5630-2ETH	10.07.2018	TGO
==ABB=AC500+PM5630-2ETH/5	39	PM5630-2ETH	10.07.2018	TGO
==ABB=AC500+PM5630-2ETH/6	40	Parts list	10.07.2018	TGO

Table of contents

Page	Sheet	Page description	Date	Last editor
==ABB=AC500+PM5650-2ETH/1	41	PM5650-2ETH	10.07.2018	TGO
==ABB=AC500+PM5650-2ETH/2	42	PM5650-2ETH	10.07.2018	TGO
==ABB=AC500+PM5650-2ETH/3	43	PM5650-2ETH	10.07.2018	TGO
==ABB=AC500+PM5650-2ETH/4	44	PM5650-2ETH	10.07.2018	TGO
==ABB=AC500+PM5650-2ETH/5	45	PM5650-2ETH	10.07.2018	TGO
==ABB=AC500+PM5650-2ETH/6	46	Parts list	10.07.2018	TGO
==ABB=AC500+PM5670-2ETH/1	47	PM5670-2ETH	10.07.2018	TGO
==ABB=AC500+PM5670-2ETH/2	48	PM5670-2ETH	10.07.2018	TGO
==ABB=AC500+PM5670-2ETH/3	49	PM5670-2ETH	10.07.2018	TGO
==ABB=AC500+PM5670-2ETH/4	50	PM5670-2ETH	10.07.2018	TGO
==ABB=AC500+PM5670-2ETH/5	51	PM5670-2ETH	10.07.2018	TGO
==ABB=AC500+PM5670-2ETH/6	52	Parts list	10.07.2018	TGO
==ABB=AC500+PM5675-2ETH/1	53	PM5675-2ETH	10.07.2018	TGO
==ABB=AC500+PM5675-2ETH/2	54	PM5675-2ETH	10.07.2018	TGO
==ABB=AC500+PM5675-2ETH/3	55	PM5675-2ETH	10.07.2018	TGO
==ABB=AC500+PM5675-2ETH/4	56	PM5675-2ETH	10.07.2018	TGO
==ABB=AC500+PM5675-2ETH/5	57	PM5675-2ETH	10.07.2018	TGO
==ABB=AC500+PM5675-2ETH/6	58	Parts list	10.07.2018	TGO
==ABB=AC500+TB5600-2ETH/1	59	TB5600-2ETH	10.07.2018	TGO
==ABB=AC500+TB5600-2ETH/2	60	TB5600-2ETH	10.07.2018	TGO
==ABB=AC500+TB5600-2ETH/3	61	Parts list	10.07.2018	TGO
==ABB=AC500+TB5610-2ETH/1	62	TB5610-2ETH	10.07.2018	TGO
==ABB=AC500+TB5610-2ETH/2	63	TB5610-2ETH	10.07.2018	TGO
==ABB=AC500+TB5610-2ETH/3	64	Parts list	10.07.2018	TGO
==ABB=AC500+TB5620-2ETH/1	65	TB5620-2ETH	10.07.2018	TGO
==ABB=AC500+TB5620-2ETH/2	66	TB5620-2ETH	10.07.2018	TGO
==ABB=AC500+TB5620-2ETH/3	67	Parts list	10.07.2018	TGO
==ABB=AC500+TB5640-2ETH/1	68	TB5640-2ETH	10.07.2018	TGO
==ABB=AC500+TB5640-2ETH/2	69	TB5640-2ETH	10.07.2018	TGO
==ABB=AC500+TB5640-2ETH/3	70	Parts list	10.07.2018	TGO
==ABB=AC500+TU516/1	71	TU516	10.07.2018	TGO
==ABB=AC500+TU516/2	72	TU516	10.07.2018	TGO
==ABB=AC500+TU516/3	73	Parts list	10.07.2018	TGO
==ABB=AC500+TU532/1	74	TU532	10.07.2018	TGO
==ABB=AC500+TU532/2	75	TU532	10.07.2018	TGO
==ABB=AC500+TU532/3	76	Parts list	10.07.2018	TGO
==ABB=AC500+TU542/1	77	TU542	10.07.2018	TGO
==ABB=AC500+TU542/2	78	TU542	10.07.2018	TGO
==ABB=AC500+TU542/3	79	Parts list	10.07.2018	TGO
==ABB=CP6xx+CP604-B/1	80	CP604-B	10.07.2018	TGO

Table of contents

Page	Sheet	Page description	Date	Last editor
==ABB=CP6xx+CP604-B/2	81	CP604-B	10.07.2018	TGO
==ABB=CP6xx+CP604-B/3	82	CP604-B	10.07.2018	TGO
==ABB=CP6xx+CP604-B/4	83	CP604-B	10.07.2018	TGO
==ABB=CP6xx+CP604-B/5	84	CP604-B	10.07.2018	TGO
==ABB=CP6xx+CP604-B/6	85	Parts list	10.07.2018	TGO
==ABB=CP6xx+CP607-B/1	86	CP607-B	10.07.2018	TGO
==ABB=CP6xx+CP607-B/2	87	CP607-B	10.07.2018	TGO
==ABB=CP6xx+CP607-B/3	88	CP607-B	10.07.2018	TGO
==ABB=CP6xx+CP607-B/4	89	CP607-B	10.07.2018	TGO
==ABB=CP6xx+CP607-B/5	90	CP607-B	10.07.2018	TGO
==ABB=CP6xx+CP607-B/6	91	Parts list	10.07.2018	TGO
==ABB=CP6xx+CP610-B/1	92	CP610-B	10.07.2018	TGO
==ABB=CP6xx+CP610-B/2	93	CP610-B	10.07.2018	TGO
==ABB=CP6xx+CP610-B/3	94	CP610-B	10.07.2018	TGO
==ABB=CP6xx+CP610-B/4	95	CP610-B	10.07.2018	TGO
==ABB=CP6xx+CP610-B/5	96	CP610-B	10.07.2018	TGO
==ABB=CP6xx+CP610-B/6	97	Parts list	10.07.2018	TGO
==ABB=CP6xx+CP6605/1	98	CP6605	10.07.2018	TGO
==ABB=CP6xx+CP6605/2	99	CP6605	10.07.2018	TGO
==ABB=CP6xx+CP6605/3	100	CP6605	10.07.2018	TGO
==ABB=CP6xx+CP6605/4	101	CP6605	10.07.2018	TGO
==ABB=CP6xx+CP6605/5	102	CP6605	10.07.2018	TGO
==ABB=CP6xx+CP6605/6	103	Parts list	10.07.2018	TGO
==ABB=CP6xx+CP6607/1	104	CP6607	10.07.2018	TGO
==ABB=CP6xx+CP6607/2	105	CP6607	10.07.2018	TGO
==ABB=CP6xx+CP6607/3	106	CP6607	10.07.2018	TGO
==ABB=CP6xx+CP6607/4	107	CP6607	10.07.2018	TGO
==ABB=CP6xx+CP6607/5	108	CP6607	10.07.2018	TGO
==ABB=CP6xx+CP6607/6	109	Parts list	10.07.2018	TGO
==ABB=CP6xx+CP6610/1	110	CP6610	10.07.2018	TGO
==ABB=CP6xx+CP6610/2	111	CP6610	10.07.2018	TGO
==ABB=CP6xx+CP6610/3	112	CP6610	10.07.2018	TGO
==ABB=CP6xx+CP6610/4	113	CP6610	10.07.2018	TGO
==ABB=CP6xx+CP6610/5	114	CP6610	10.07.2018	TGO
==ABB=CP6xx+CP6610/6	115	Parts list	10.07.2018	TGO
==ABB=CP6xx+CP6615/1	116	CP6615	10.07.2018	TGO
==ABB=CP6xx+CP6615/2	117	CP6615	10.07.2018	TGO
==ABB=CP6xx+CP6615/3	118	CP6615	10.07.2018	TGO
==ABB=CP6xx+CP6615/4	119	CP6615	10.07.2018	TGO
==ABB=CP6xx+CP6615/5	120	CP6615	10.07.2018	TGO

Table of contents

Page	Sheet	Page description	Date	Last editor
==ABB=CP6xx+CP6615/6	121	Parts list	10.07.2018	TGO
==ABB=CP6xx+CP6621/1	122	CP6621	10.07.2018	TGO
==ABB=CP6xx+CP6621/2	123	CP6621	10.07.2018	TGO
==ABB=CP6xx+CP6621/3	124	CP6621	10.07.2018	TGO
==ABB=CP6xx+CP6621/4	125	CP6621	10.07.2018	TGO
==ABB=CP6xx+CP6621/5	126	CP6621	10.07.2018	TGO
==ABB=CP6xx+CP6621/6	127	Parts list	10.07.2018	TGO

-A1

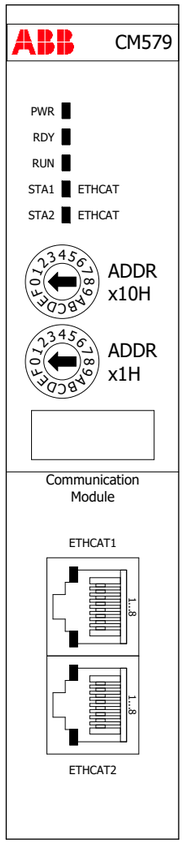

ABB\CM579-ETHCAT.ema
CM579-ETHCAT:
AC500, Communication Module EtherCAT Master, 2xRJ45
Version 07/2018
Allpolig
Variante A

0	1	2	3	4	5	6	7	8	9

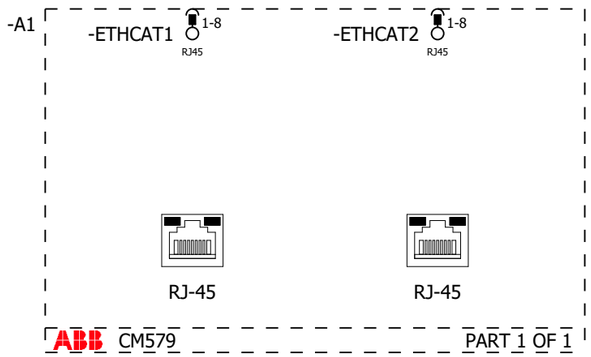

ABB\CM579-ETHCAT.ema
CM579-ETHCAT:
AC500, Communication Module EtherCAT Master, 2xRJ45
Version 07/2018
Einpolig
Variante A

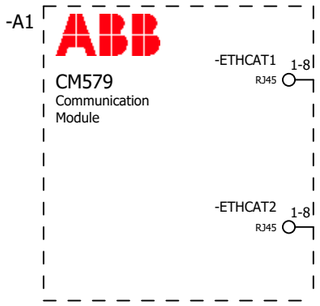

ABB\CM579-ETHCAT.ema
CM579-ETHCAT:
AC500, Communication Module EtherCAT Master, 2xRJ45
Version 07/2018
Übersicht
Variante A

-A1
0

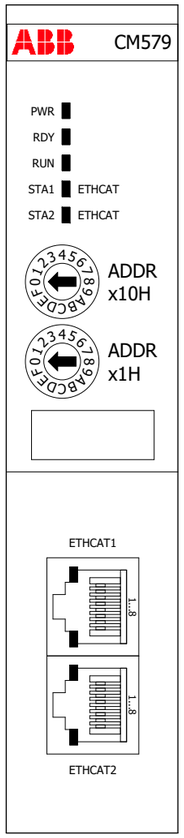

ABB\CM579-ETHCAT.ema
CM579-ETHCAT:
AC500, Communication Module EtherCAT Master, 2xRJ45
Version 07/2018
Schaltschrankaufbau
Variante A

Parts list

device tag	Quantity QU	Designation 1 Description Technical characteristics	Type number Order number	manufacturer supplier	part number function text
==ABB =AC500 +CM579-ETHCAT	1 PCE	CM579-ETHCAT:AC500, Communication Module EtherCAT Master, 2xRJ45 CM579-ETHCAT:AC500, Communication Module EtherCAT Master, 2xRJ45	CM579-ETHCAT 1SAP170902R0101	ABB	ABB.1SAP170902R0101

-A1

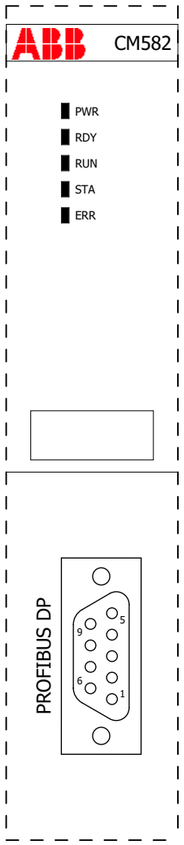

ABB\CM582-DP.ema
CM582-DP:
AC500, Communication Module PROFIBUS-DP Slave, D-Sub 9 poles
Version 07/2018
Allpolig
Variante A

0	1	2	3	4	5	6	7	8	9

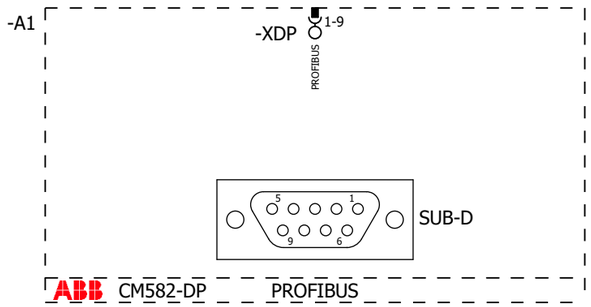

Legende:

1	FE	Functional earth
2	NC	Not connected
3	RxD/TxD-P	Receive/Transmit positive
4	CNTR-P	Control signal for repeater, positive
5	DGND	Reference potential for data exchange and +5 VI
6	VP	+5 V (power supply for the bus terminating resistors)
7	NC	Not connected
8	RxD/TxD-N	Receive/Transmit negative
9	CNTR-N	Control signal for repeater, negative

PROFIBUS-Adresse:

???

ABB\CM582-DP.ema
CM582-DP:
AC500, Communication Module PROFIBUS-DP Slave, D-Sub 9 poles
Version 07/2018
Einpolig
Variante A

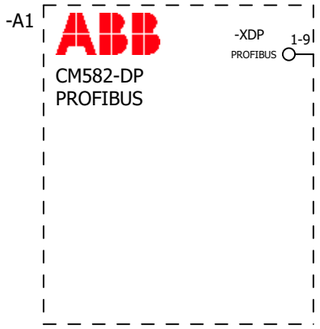

ABB\CM582-DP.ema
CM582-DP:
AC500, Communication Module PROFIBUS-DP Slave, D-Sub 9 poles
Version 07/2018
Übersicht
Variante A

-A1
0

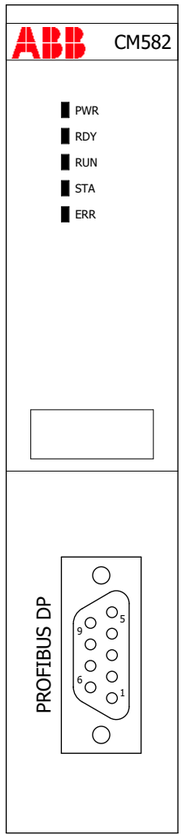

ABB\CM582-DP.ema
CM582-DP:
AC500, Communication Module PROFIBUS-DP Slave, D-Sub 9 poles
Version 07/2018
Schaltschrankaufbau
Variante A

			Date	10.07.2018	18-204		CM582-DP	== ABB	Page	14
			Ed.	TGO				= AC500	from	127
			Appr					++		
Modification	Date	Name	Original		Replacement of	Replaced by		+ CM582-DP	Page	4

Parts list

device tag	Quantity QU	Designation 1 Description Technical characteristics	Type number Order number	manufacturer supplier	part number function text
==ABB =AC500 +CM582-DP	1 PCE	CM582-DP:AC500, Communication Module PROFIBUS-DP Slave, D-Sub 9 poles CM582-DP:AC500, Communication Module PROFIBUS-DP Slave, D-Sub 9 poles	CM582-DP 1SAP172200R0001	ABB	ABB.1SAP172200R0001
==ABB =AC500 +CM582-DP	1 PCE	CM582-DP-XC:AC500, Communication Module PROFIBUS-DP Slave, D-Sub 9 poles, CM582-DP-XC:AC500, Communication Module PROFIBUS-DP Slave, D-Sub 9 poles, Outdoor	CM582-DP-XC 1SAP372200R0001	ABB	ABB.1SAP372200R0001

-A1

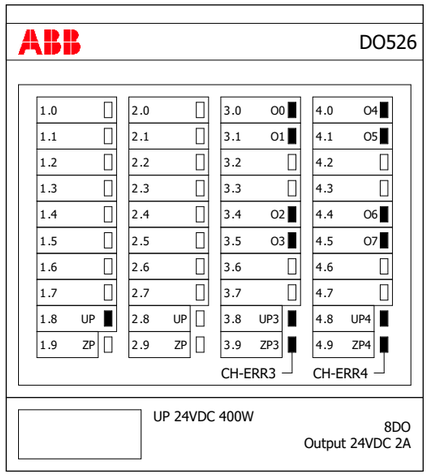

ABB\DO526.ema
DO526:
S500,Digital Output Module 8DO, DO-Transistor:24VDC/2A,1-wire
Version 07/2018
Allpolig
Variante A

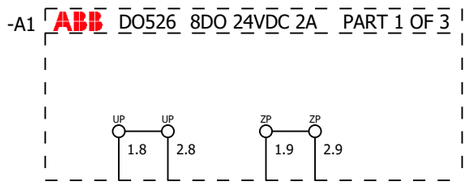

ABB\DO526.ema
DO526:
S500,Digital Output Module 8DO, DO-Transistor:24VDC/2A,1-wire
Version 07/2018
Allpolig
Variante B

			Date	10.07.2018	18-204		DO526	== ABB	Page	17
			Ed.	TGO				= AC500	from	127
			Appr					++		
Modification	Date	Name	Original		Replacement of	Replaced by		+ DO526	Page	2

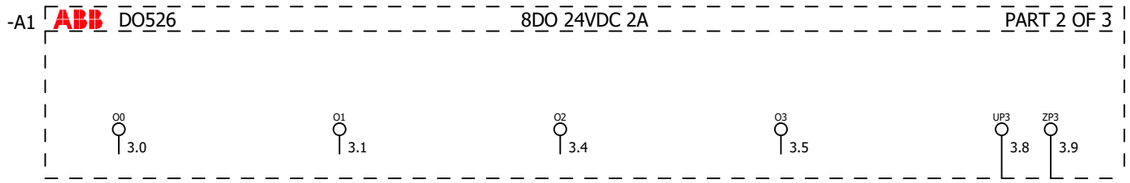

ABB\DO526.ema
DO526:
S500,Digital Output Module 8DO, DO-Transistor:24VDC/2A,1-wire
Version 07/2018
Allpolig
Variante C

			Date	10.07.2018	18-204		DO526	== ABB	Page	18
			Ed.	TGO				= AC500	from	127
			Appr					++		
Modification	Date	Name	Original		Replacement of	Replaced by		+ DO526	Page	3

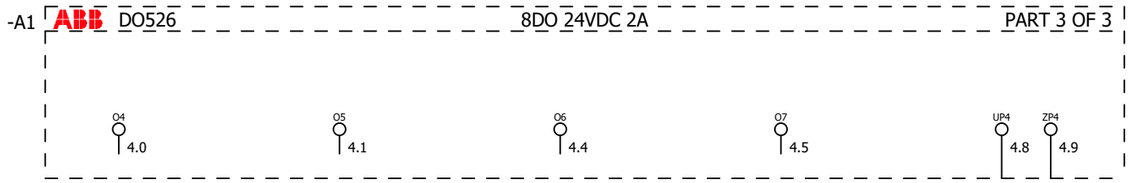

ABB\DO526.ema
DO526:
S500,Digital Output Module 8DO, DO-Transistor:24VDC/2A,1-wire
Version 07/2018
Allpolig
Variante D

			Date	10.07.2018	18-204		DO526	== ABB	Page	19
			Ed.	TGO				= AC500	from	127
			Appr					++		
Modification	Date	Name	Original		Replacement of	Replaced by		+ DO526	Page	4

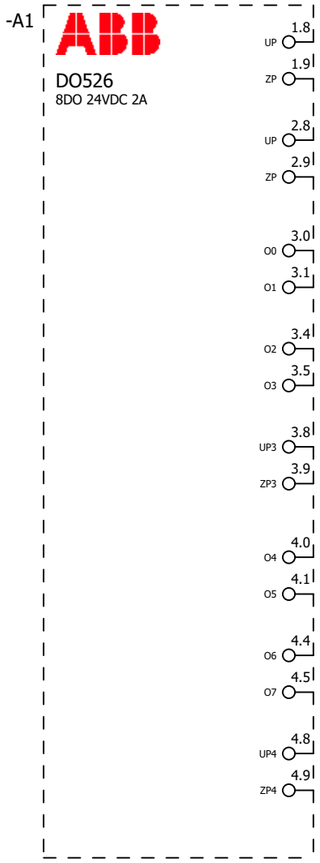

ABB\DO526.ema
DO526:
S500,Digital Output Module 8DO, DO-Transistor:24VDC/2A,1-wire
Version 07/2018
Übersicht
Variante A

			Date	10.07.2018	18-204		DO526	== ABB	Page	20
			Ed.	TGO				= AC500	from	127
			Appr					++		
Modification	Date	Name	Original		Replacement of	Replaced by		+ DO526	Page	6

-A1
0

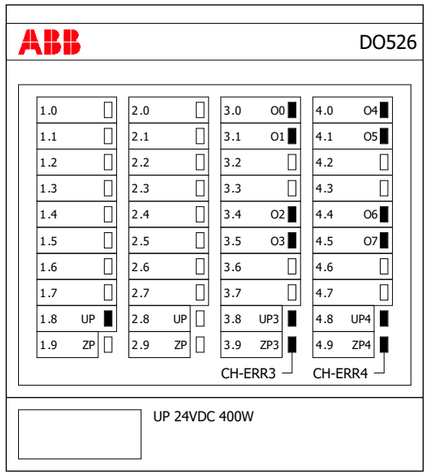

ABB\DO526.ema
DO526:
S500,Digital Output Module 8DO, DO-Transistor:24VDC/2A,1-wire
Version 07/2018
Schaltschrankaufbau
Variante A

Parts list

device tag	Quantity QU	Designation 1 Description Technical characteristics	Type number Order number	manufacturer supplier	part number function text
==ABB =AC500 +DO526 -A1	1 PCE	DO526-XC:S500,Digital Output Module 8DO-Transistor:24VDC/2A,1-wire DO526-XC:S500,Digital Output Module 8DO, DO-Transistor:24VDC/2A,1-wire	DO526-XC 1SAP440800R0001	ABB	ABB.1SAP440800R0001

-A1

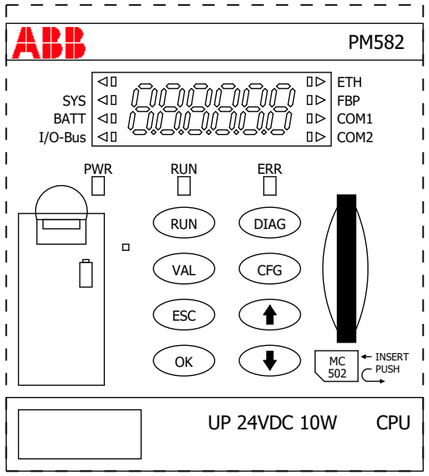

ABB\PM582.ema
PM582:
AC500,Prog.Logic Controller 512kB 24VDC,
2xRS232/485,FBP,SD-Card Slot LCD Display
Version 07/2018
Allpolig
Variante A

0	1	2	3	4	5	6	7	8	9

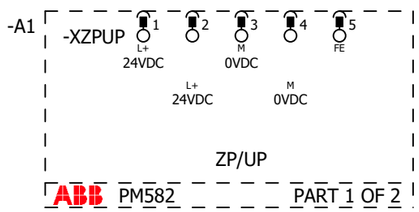

ABB\PM582.ema
PM582:
AC500,Prog.Logic Controller 512kB 24VDC,
2xRS232/485,FBP,SD-Card Slot LCD Display
Version 07/2018
Allpolig
Variante B

0	1	2	3	4	5	6	7	8	9

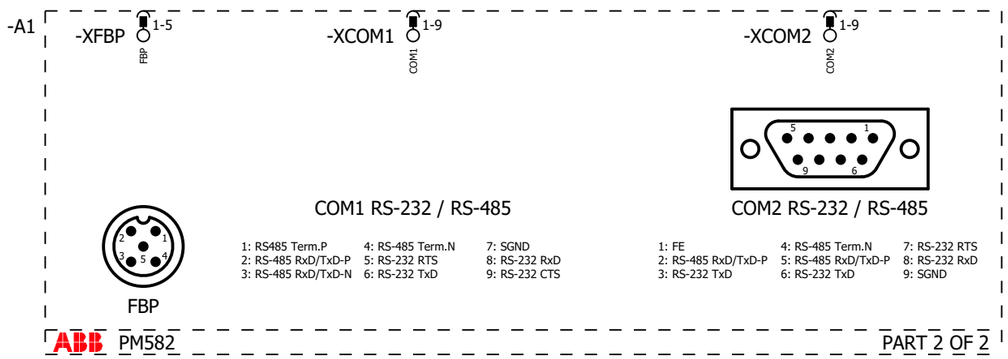

FBP Knotenadresse:

???

ABB\PM582.ema
PM582:
AC500,Prog.Logic Controller 512kB 24VDC,
2xRS232/485,FBP,SD-Card Slot LCD Display
Version 07/2018
Einpolig
Variante A

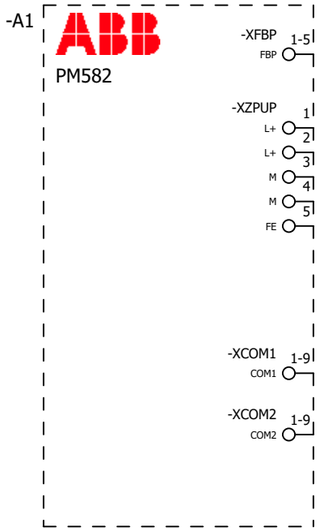

ABB\PM582.ema
PM582:
AC500,Prog.Logic Controller 512kB 24VDC,
2xRS232/485,FBP,SD-Card Slot LCD Display
Version 07/2018
Übersicht
Variante A

-A1
0

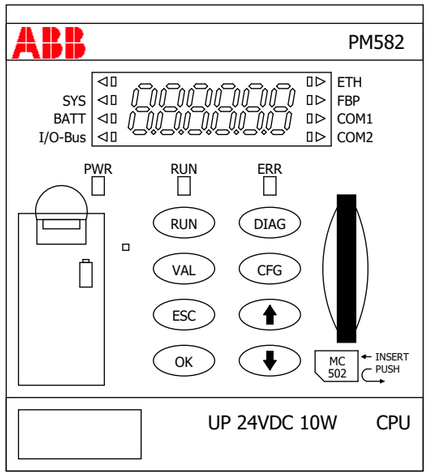

ABB\PM582.ema
PM582:
AC500,Prog.Logic Controller 512kB 24VDC,
2xRS232/485,FBP,SD-Card Slot LCD Display
Version 07/2018
Schaltschrankaufbau
Variante A

Parts list

device tag	Quantity QU	Designation 1 Description Technical characteristics	Type number Order number	manufacturer supplier	part number function text
==ABB =AC500 +PM582	1 PCE	PM582:AC500,Programmable Logic Controller 512kB, 24VDC,2xRS232/485,FBP,SD-Card PM582:AC500,Prog.Logic Controller 512kB 24VDC,2xRS232/485,FBP,SD-Card Slot LCD Display	PM582 1SAP140200R0201	ABB	ABB.1SAP140200R0201

-A1

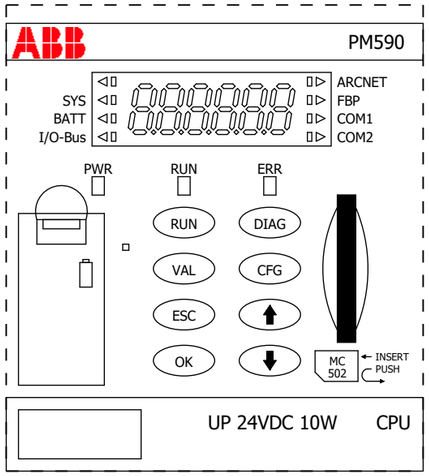

ABB\PM590_ARCNET.ema
PM590-ARCNET:
AC500,Programmable Logic Controller 2MB, 24VDC,
ARCNET, 2xRS232/485, FBP, SD-Card Slot, LCD Display
Version 07/2018
Allpolig
Variante A

0	1	2	3	4	5	6	7	8	9

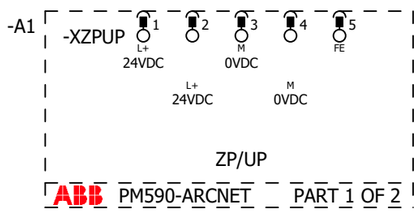

ABB\PM590_ARCNET.ema
PM590-ARCNET:
AC500,Programmable Logic Controller 2MB, 24VDC,
ARCNET, 2xRS232/485, FBP, SD-Card Slot, LCD Display
Version 07/2018
Allpolig
Variante B

0	1	2	3	4	5	6	7	8	9

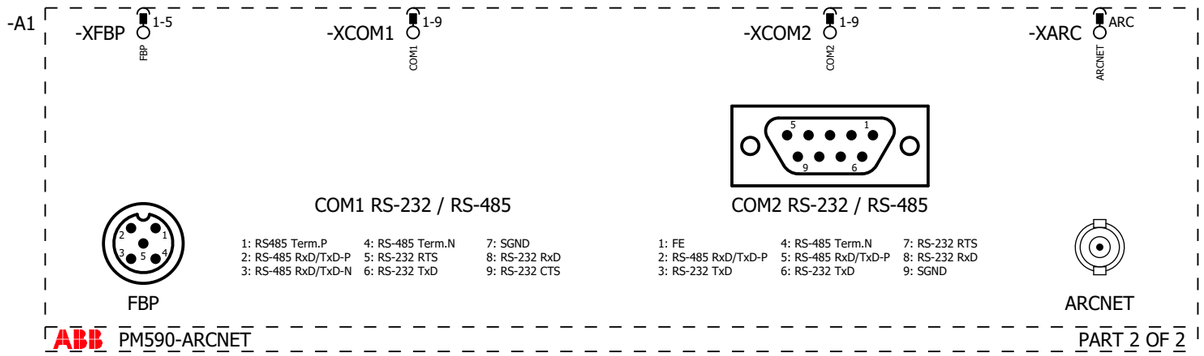

ARCNET Knotenadresse:

???

ABB\PM590_ARCNET.ema
PM590-ARCNET:
AC500,Programmable Logic Controller 2MB, 24VDC,
ARCNET, 2xRS232/485, FBP, SD-Card Slot, LCD Display
Version 07/2018
Einpolig
Variante A

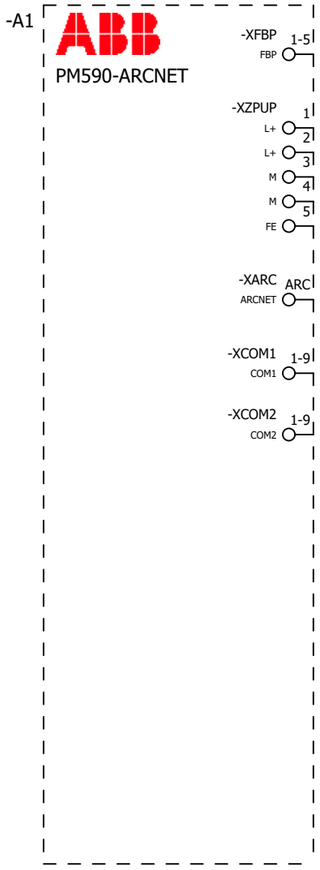

ABB\PM590_ARCNET.ema
PM590-ARCNET:
AC500,Programmable Logic Controller 2MB, 24VDC,
ARCNET, 2xRS232/485, FBP, SD-Card Slot, LCD Display
Version 07/2018
Übersicht
Variante A

-A1
0

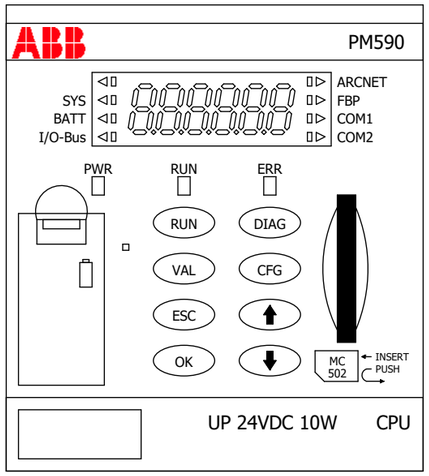

ABB\PM590_ARCNET.ema
PM590-ARCNET:
AC500,Programmable Logic Controller 2MB, 24VDC,
ARCNET, 2xRS232/485, FBP, SD-Card Slot, LCD Display
Version 07/2018
Schaltschrankaufbau
Variante A

Parts list

device tag	Quantity QU	Designation 1 Description Technical characteristics	Type number Order number	manufacturer supplier	part number function text
==ABB =AC500 +PM590_ARCNET	1 PCE	PM590-ARCNET:AC500,Programmable Logic Controller 2MB, 24VDC, ARCNET, PM590-ARCNET:AC500,Programmable Logic Controller 2MB, 24VDC, ARCNET, 2xRS232/485, FBP, SD-Card Slot, LCD Display	PM590-ARCNET 1SAP150000R0261	ABB	ABB.1SAP150000R0261

-A1

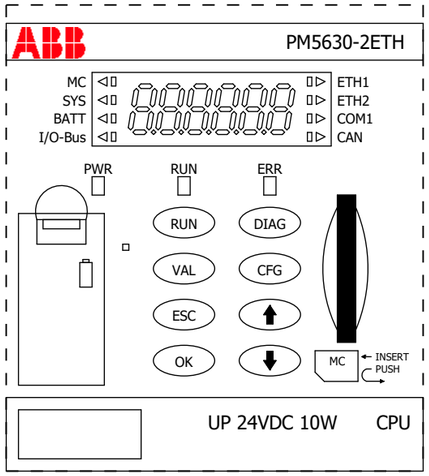

ABB\PM5630-2ETH.ema
PM5630-2ETH:
AC500, Programmable Logic Controller 8MB, 24VDC,
2xETHERNET, 1xRS232/485, CAN, SD-Card Slot, LCD Display
Version 07/2018
Allpolig
Variante A

0	1	2	3	4	5	6	7	8	9

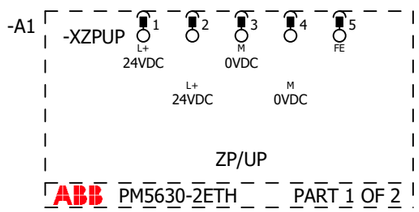

ABB\PM5630-2ETH.ema
PM5630-2ETH:
AC500, Programmable Logic Controller 8MB, 24VDC,
2xETHERNET, 1xRS232/485, CAN, SD-Card Slot, LCD Display
Version 07/2018
Allpolig
Variante B

0	1	2	3	4	5	6	7	8	9

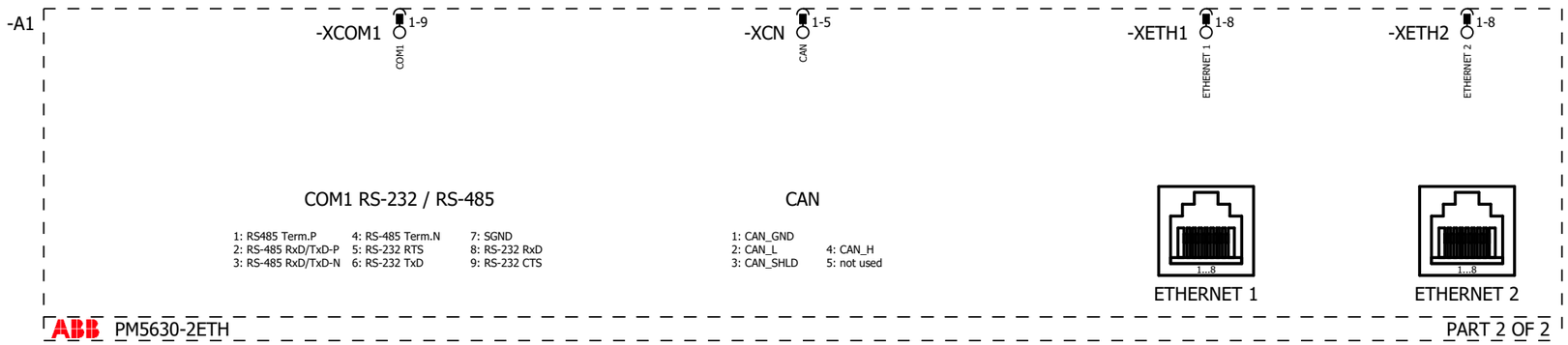

Ethernet 1 Netzwerkadresse:

???.???.???.???

Ethernet 2 Netzwerkadresse:

???.???.???.???

ABB\PM5630-2ETH.ema
PM5630-2ETH:
AC500, Programmable Logic Controller 8MB, 24VDC,
2xETHERNET, 1xRS232/485, CAN, SD-Card Slot, LCD Display
Version 07/2018
Einpolig
Variante A

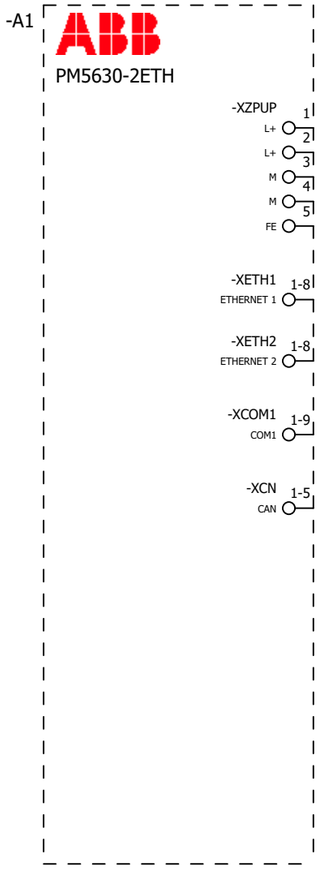

ABB\PM5630-2ETH.ema
PM5630-2ETH:
AC500, Programmable Logic Controller 8MB, 24VDC,
2xETHERNET, 1xRS232/485, CAN, SD-Card Slot, LCD Display
Version 07/2018
Übersicht
Variante A

-A1
0

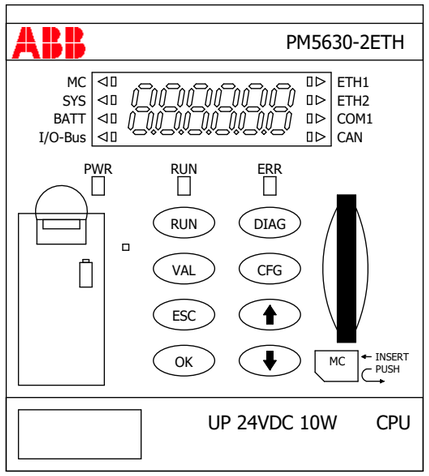

ABB\PM5630-2ETH.ema
PM5630-2ETH:
AC500, Programmable Logic Controller 8MB, 24VDC,
2xETHERNET, 1xRS232/485, CAN, SD-Card Slot, LCD Display
Version 07/2018
Schaltschrankaufbau
Variante A

Parts list

device tag	Quantity QU	Designation 1 Description Technical characteristics	Type number Order number	manufacturer supplier	part number function text
==ABB =AC500 +PM5630-2ETH	1 PCE	PM5630-2ETH:AC500, Programmable Logic Controller 8MB, 24VDC, 2xETHERNET, PM5630-2ETH:AC500, Programmable Logic Controller 8MB, 24VDC, 2xETHERNET, 1xRS232/485, CAN, SD-Card Slot, LCD Display	PM5630-2ETH 1SAP131000R0278	ABB	ABB.1SAP131000R0278
==ABB =AC500 +PM5630-2ETH	1 PCE	PM5630-2ETH-XC:AC500, Programmable Logic Controller 8MB, 24VDC, 2xETHERNET, PM5630-2ETH-XC:AC500, Programmable Logic Controller 8MB, 24VDC, 2xETHERNET, 1xRS232/485, CAN, SD-Card Slot, LCD Display, Outdoor	PM5630-2ETH-XC 1SAP331000R0278	ABB	ABB.1SAP331000R0278

-A1

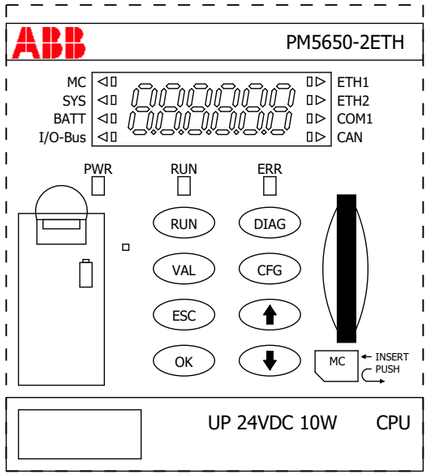

ABB\PM5650-2ETH.ema
PM5650-2ETH:
AC500, Programmable Logic Controller 80MB
24VDC, 2xETHERNET, 1xRS232/485, CAN, SD-Card Slot, LCD Display
Version 07/2018
Allpolig
Variante A

0	1	2	3	4	5	6	7	8	9

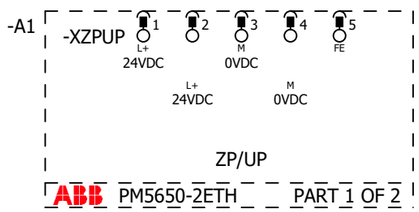

ABB\PM5650-2ETH.ema
PM5650-2ETH:
AC500, Programmable Logic Controller 80MB
24VDC, 2xETHERNET, 1xRS232/485, CAN, SD-Card Slot, LCD Display
Version 07/2018
Allpolig
Variante B

0	1	2	3	4	5	6	7	8	9

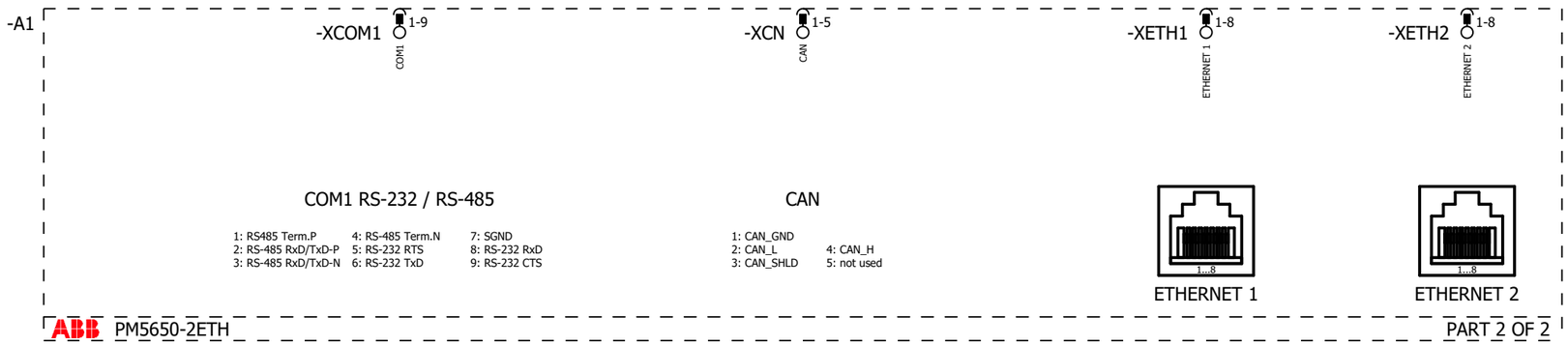

Ethernet 1 Netzwerkadresse:

???.???.???.???

Ethernet 2 Netzwerkadresse:

???.???.???.???

ABB\PM5650-2ETH.ema
PM5650-2ETH:
AC500, Programmable Logic Controller 80MB
24VDC, 2xETHERNET, 1xRS232/485, CAN, SD-Card Slot, LCD Display
Version 07/2018
Einpolig
Variante A

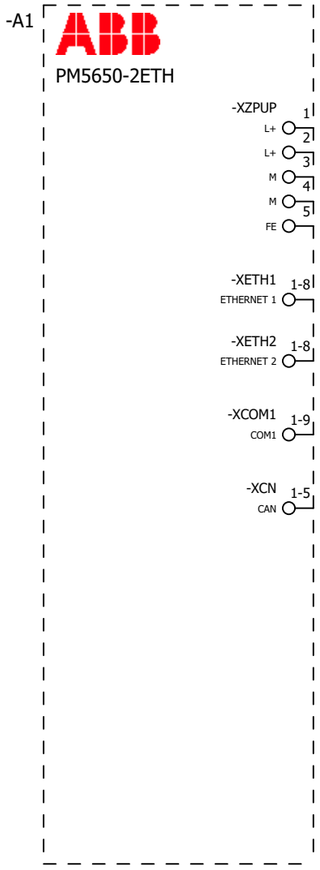

ABB\PM5650-2ETH.ema
PM5650-2ETH:
AC500, Programmable Logic Controller 80MB
24VDC, 2xETHERNET, 1xRS232/485, CAN, SD-Card Slot, LCD Display
Version 07/2018
Übersicht
Variante A

-A1
0

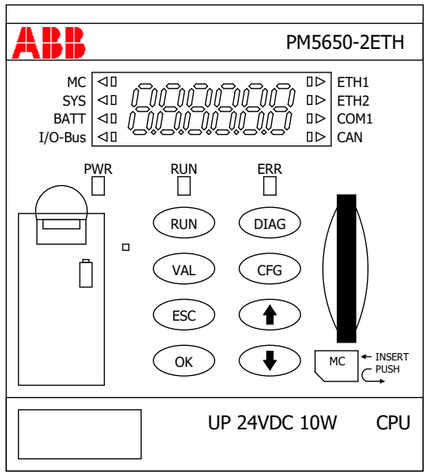

ABB\PM5650-2ETH.ema
PM5650-2ETH:
AC500, Programmable Logic Controller 80MB
24VDC, 2xETHERNET, 1xRS232/485, CAN, SD-Card Slot, LCD Display
Version 07/2018
Schaltschrankaufbau
Variante A

Parts list

device tag	Quantity QU	Designation 1 Description Technical characteristics	Type number Order number	manufacturer supplier	part number function text
==ABB =AC500 +PM5650-2ETH	1 PCE	PM5650-2ETH-XC:AC500, Programmable Logic Controller 80MB, 24VDC, 2xETHERNET, PM5650-2ETH-XC:AC500, Programmable Logic Controller 80MB, 24VDC, 2xETHERNET, 1xRS232/485, CAN, SD-Card Slot, LCD Display, Outdoor	PM5650-2ETH-XC 1SAP341000R0278	ABB	ABB.1SAP341000R0278

-A1

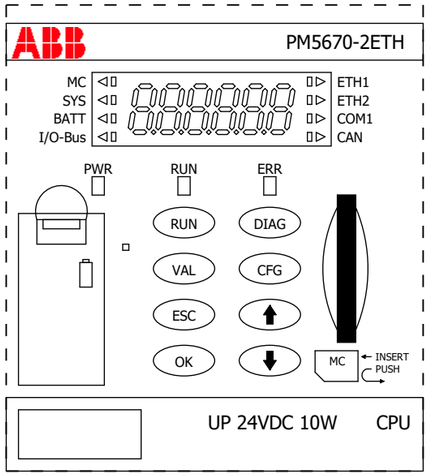

ABB\PM5670-2ETH.ema
PM5670-2ETH:
AC500, Programmable Logic Controller 160MB, 24VDC,
2xETHERNET, 1xRS232/485, CAN, SD-Card Slot, LCD Display
Version 07/2018
Allpolig
Variante A

0	1	2	3	4	5	6	7	8	9

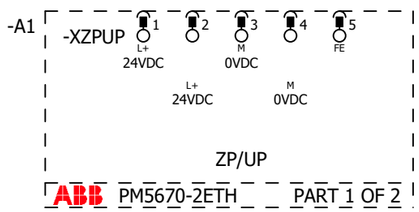

ABB\PM5670-2ETH.ema
PM5670-2ETH:
AC500, Programmable Logic Controller 160MB, 24VDC,
2xETHERNET, 1xRS232/485, CAN, SD-Card Slot, LCD Display
Version 07/2018
Allpolig
Variante B

0	1	2	3	4	5	6	7	8	9

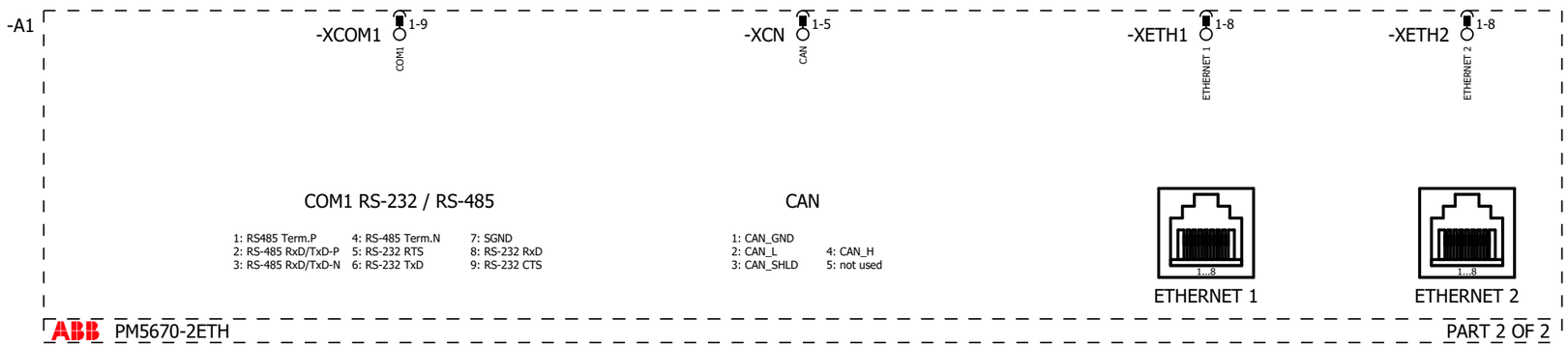

Ethernet 1 Netzwerkadresse:

???.???.???.???

Ethernet 2 Netzwerkadresse:

???.???.???.???

ABB\PM5670-2ETH.ema
PM5670-2ETH:
AC500, Programmable Logic Controller 160MB, 24VDC,
2xETHERNET, 1xRS232/485, CAN, SD-Card Slot, LCD Display
Version 07/2018
Einpolig
Variante A

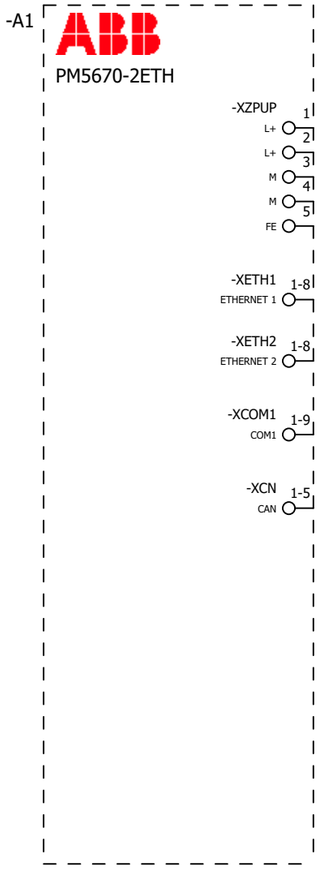

ABB\PM5670-2ETH.ema
PM5670-2ETH:
AC500, Programmable Logic Controller 160MB, 24VDC,
2xETHERNET, 1xRS232/485, CAN, SD-Card Slot, LCD Display
Version 07/2018
Übersicht
Variante A

-A1
0

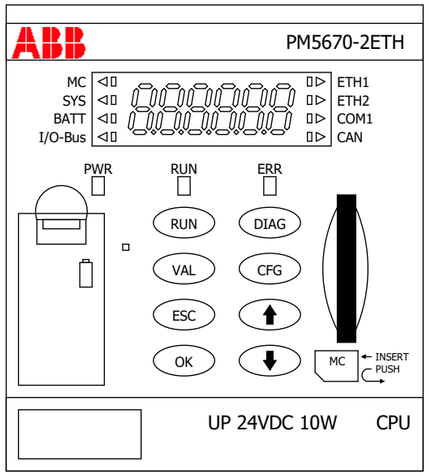

ABB\PM5670-2ETH.ema
PM5670-2ETH:
AC500, Programmable Logic Controller 160MB, 24VDC,
2xETHERNET, 1xRS232/485, CAN, SD-Card Slot, LCD Display
Version 07/2018
Schaltschrankaufbau
Variante A

Parts list

device tag	Quantity QU	Designation 1 Description Technical characteristics	Type number Order number	manufacturer supplier	part number function text
==ABB =AC500 +PM5670-2ETH	1 PCE	PM5670-2ETH:AC500, Programmable Logic Controller 160MB, 24VDC, 2xETHERNET, PM5670-2ETH:AC500, Programmable Logic Controller 160MB, 24VDC, 2xETHERNET, 1xRS232/485, CAN, SD-Card Slot, LCD Display	PM5670-2ETH 1SAP151000R0278	ABB	ABB.1SAP151000R0278
==ABB =AC500 +PM5670-2ETH	1 PCE	PM5670-2ETH-XC:AC500, Programmable Logic Controller 160MB, 24VDC, 2xETHERNET, PM5670-2ETH-XC:AC500, Programmable Logic Controller 160MB, 24VDC, 2xETHERNET, 1xRS232/485, CAN, SD-Card Slot, LCD Display, Outdoor	PM5670-2ETH-XC 1SAP351000R0278	ABB	ABB.1SAP351000R0278

-A1

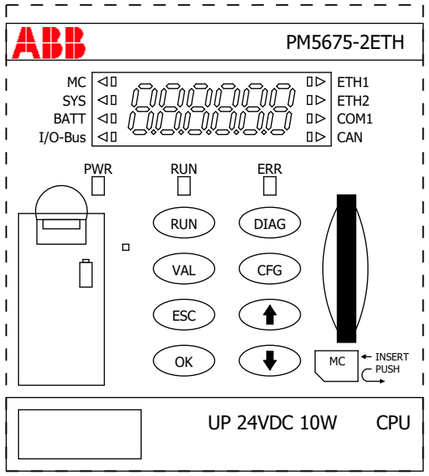

ABB\PM5675-2ETH.ema
PM5675-2ETH:
AC500, Programmable Logic Controller 160MB, 24VDC,
2xETHERNET, 1xRS232/485, CAN, SD-Card Slot, 8GB Flashdisk, LCD Display
Version 07/2018
Allpolig
Variante A

0	1	2	3	4	5	6	7	8	9

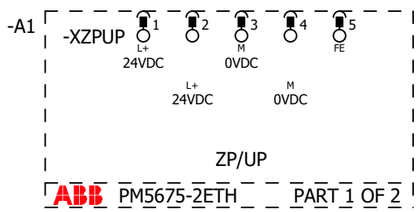

ABB\PM5675-2ETH.ema
PM5675-2ETH:
AC500, Programmable Logic Controller 160MB, 24VDC,
2xETHERNET, 1xRS232/485, CAN, SD-Card Slot, 8GB Flashdisk, LCD Display
Version 07/2018
Allpolig
Variante B

0	1	2	3	4	5	6	7	8	9

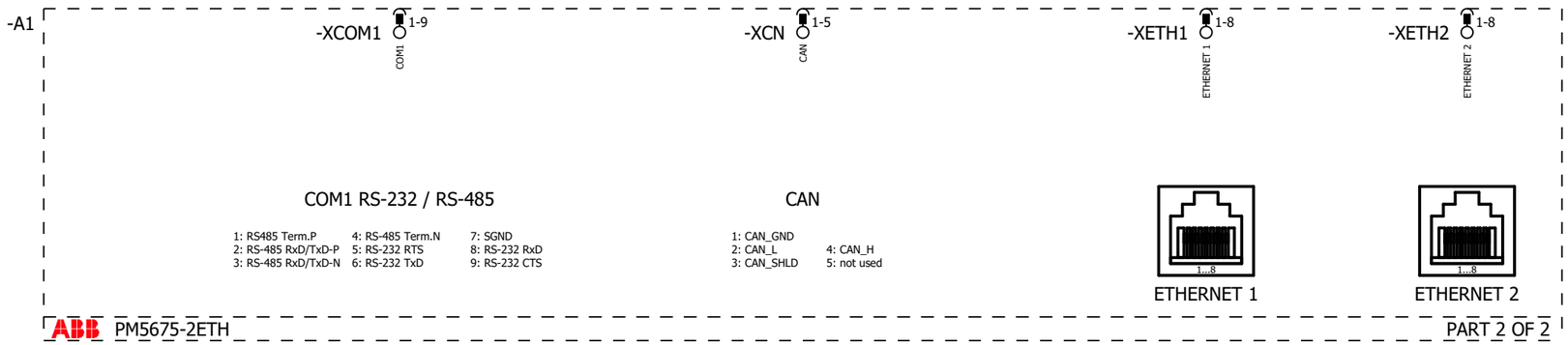

Ethernet 1 Netzwerkadresse:

???.???.???.???

Ethernet 2 Netzwerkadresse:

???.???.???.???

ABB\PM5675-2ETH.ema
PM5675-2ETH:
AC500, Programmable Logic Controller 160MB, 24VDC,
2xETHERNET, 1xRS232/485, CAN, SD-Card Slot, 8GB Flashdisk, LCD Display
Version 07/2018
Einpolig
Variante A

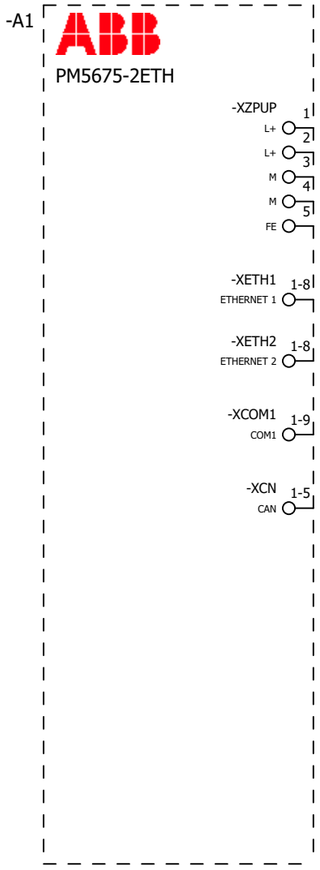

ABB\PM5675-2ETH.ema
PM5675-2ETH:
AC500, Programmable Logic Controller 160MB, 24VDC,
2xETHERNET, 1xRS232/485, CAN, SD-Card Slot, 8GB Flashdisk, LCD Display
Version 07/2018
Übersicht
Variante A

-A1
0

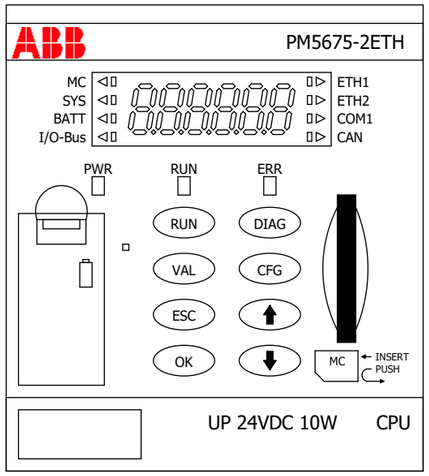

ABB\PM5675-2ETH.ema
PM5675-2ETH:
AC500, Programmable Logic Controller 160MB, 24VDC,
2xETHERNET, 1xRS232/485, CAN, SD-Card Slot, 8GB Flashdisk, LCD Display
Version 07/2018
Schaltschrankaufbau
Variante A

Parts list

device tag	Quantity QU	Designation 1 Description Technical characteristics	Type number Order number	manufacturer supplier	part number function text
==ABB =AC500 +PM5675-2ETH	1 PCE	PM5675-2ETH:AC500, Programmable Logic Controller 160MB, 24VDC, 2xETHERNET, PM5675-2ETH:AC500, Programmable Logic Controller 160MB, 24VDC, 2xETHERNET, 1xRS232/485, CAN, SD-Card Slot, 8GB Flashdisk, LCD Display	PM5675-2ETH 1SAP151500R0278	ABB	ABB.1SAP151500R0278
==ABB =AC500 +PM5675-2ETH	1 PCE	PM5675-2ETH-XC:AC500, Progr.Logic Controller 160MB, 24VDC, 2xETHERNET, PM5675-2ETH-XC:AC500, Progr.Logic Controller 160MB, 24VDC, 2xETHERNET, 1xRS232/485, CAN, SD-Card Slot, 8GB Flashdisk, LCD Display, Outdoor	PM5675-2ETH-XC 1SAP351500R0278	ABB	ABB.1SAP351500R0278

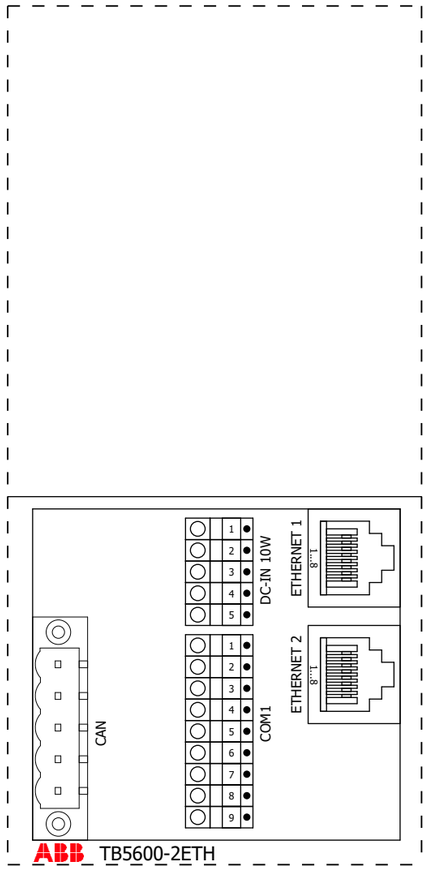

-A1

ABB\TB5600-2ETH.ema
TB5600-2ETH:
AC500, Terminal Base, 0xslot, 2xETHERNET RJ45, 1xCOM,
24VDC, CAN connector, spring terminals
Version 07/2018
Allpolig
Variante A

-A1
0

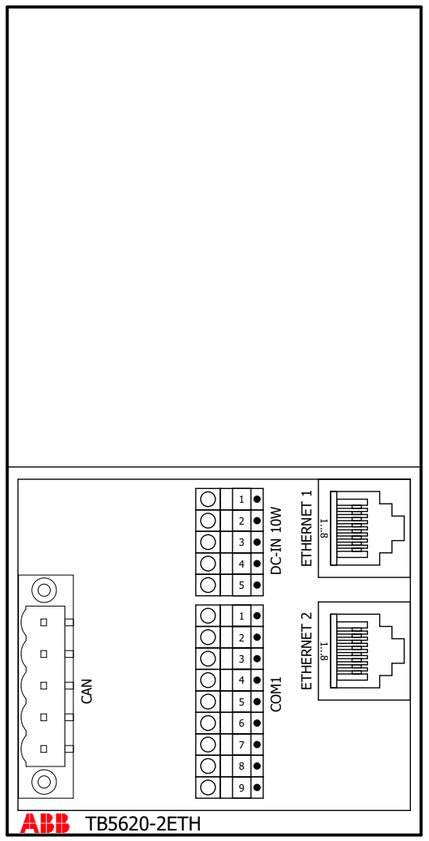

ABB\TB5600-2ETH.ema
TB5600-2ETH:
AC500, Terminal Base, 0xslot, 2xETHERNET RJ45, 1xCOM,
24VDC, CAN connector, spring terminals
Version 07/2018
Schaltschrankaufbau
Variante A

Parts list

device tag	Quantity QU	Designation 1 Description Technical characteristics	Type number Order number	manufacturer supplier	part number function text
==ABB =AC500 +TB5600-2ETH	1 PCE	TB5600-2ETH:AC500, Terminal Base, 0xslot, 2xETHERNET RJ45, 1xCOM, 24VDC, CAN TB5600-2ETH:AC500, Terminal Base, 0xslot, 2xETHERNET RJ45, 1xCOM, 24VDC, CAN connector, spring terminals	TB5600-2ETH 1SAP110300R0278	ABB	ABB.1SAP110300R0278
==ABB =AC500 +TB5600-2ETH	1 PCE	TB5600-2ETH-XC:AC500, Terminal Base, 0xslot, 2xETHERNET RJ45, 1xCOM, 24VDC, CAN TB5600-2ETH-XC:AC500, Terminal Base, 0xslot, 2xETHERNET RJ45, 1xCOM, 24VDC, CAN connector, spring terminals, Outdoor	TB5600-2ETH-XC 1SAP310300R0278	ABB	ABB.1SAP310300R0278

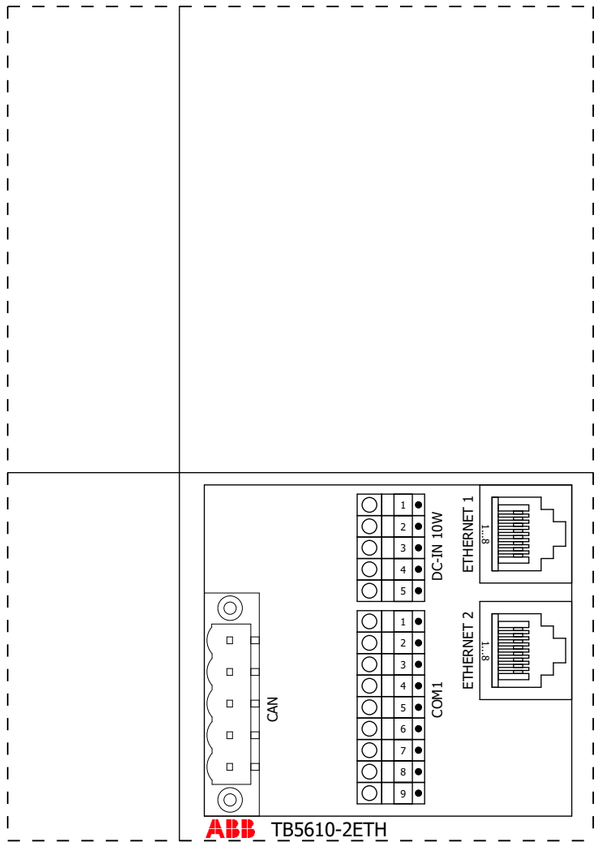

-A1

ABB\TB5610-2ETH.ema
TB5610-2ETH:
AC500, Terminal Base, 1xslot, 2xETHERNET RJ45, 1xCOM,
24VDC, CAN connector, spring terminals
Version 07/2018
Allpolig
Variante A

-A1
0

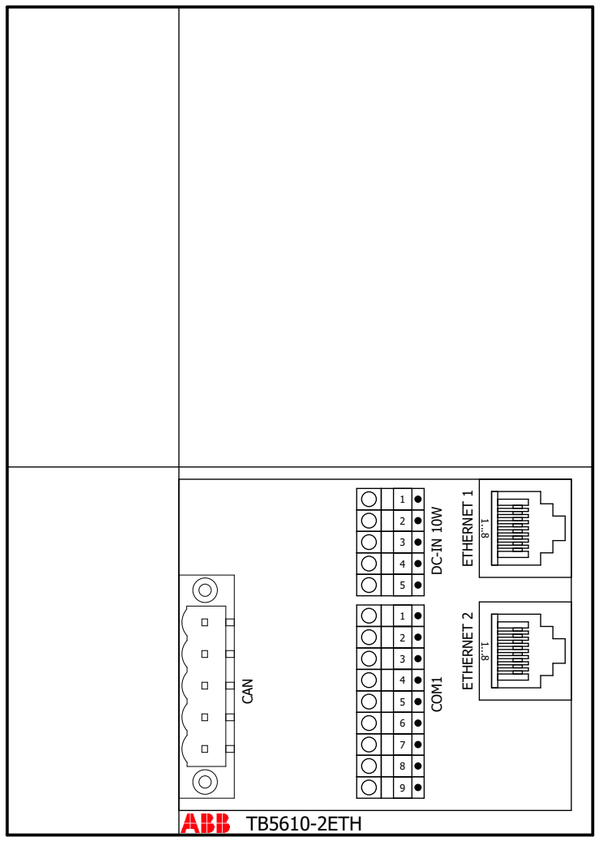

ABB\TB5610-2ETH.ema
TB5610-2ETH:
AC500, Terminal Base, 1xslot, 2xETHERNET RJ45, 1xCOM,
24VDC, CAN connector, spring terminals
Version 07/2018
Schaltschrankaufbau
Variante A

Parts list

device tag	Quantity QU	Designation 1 Description Technical characteristics	Type number Order number	manufacturer supplier	part number function text
==ABB =AC500 +TB5610-2ETH	1 PCE	TB5610-2ETH:AC500, Terminal Base, 1xslot, 2xETHERNET RJ45, 1xCOM, 24VDC, CAN TB5610-2ETH:AC500, Terminal Base, 1xslot, 2xETHERNET RJ45, 1xCOM, 24VDC, CAN connector, spring terminals	TB5610-2ETH 1SAP111300R0278	ABB	ABB.1SAP111300R0278
==ABB =AC500 +TB5610-2ETH	1 PCE	TB5610-2ETH-XC:AC500, Terminal Base, 1xslot, 2xETHERNET RJ45, 1xCOM, 24VDC, CAN TB5610-2ETH-XC:AC500, Terminal Base, 1xslot, 2xETHERNET RJ45, 1xCOM, 24VDC, CAN connector, spring terminals, Outdoor	TB5610-2ETH-XC 1SAP311300R0278	ABB	ABB.1SAP311300R0278

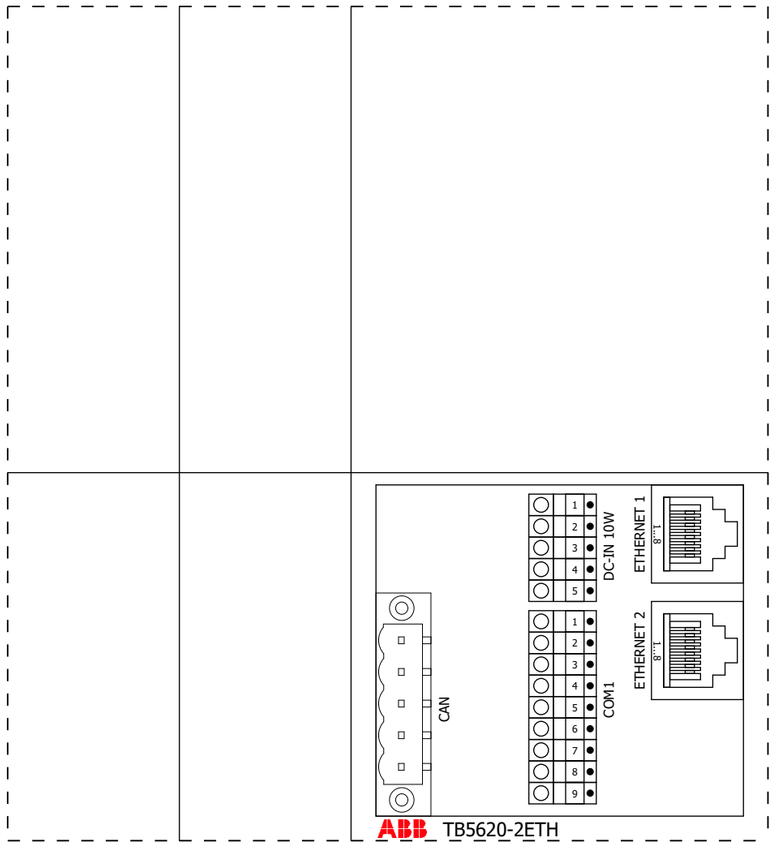

-A1

ABB\TB5620-2ETH.ema
TB5620-2ETH:
AC500, Terminal Base, 2xslots, 2xETHERNET RJ45, 1xCOM,
24VDC, CAN connector, spring terminals
Version 07/2018
Allpolig
Variante A

-A1
0

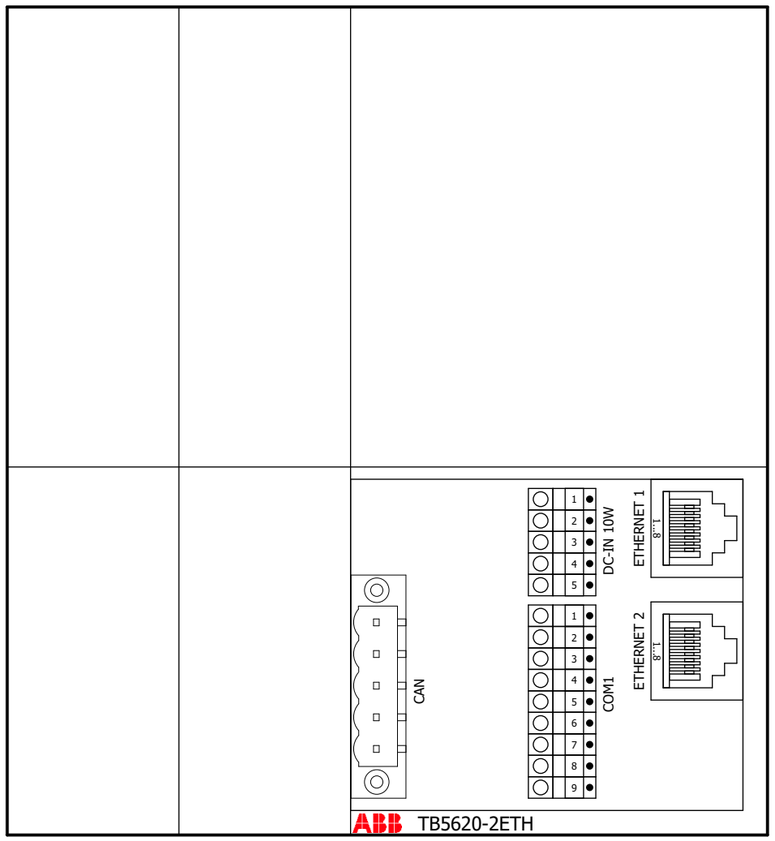

ABB\TB5620-2ETH.ema
TB5620-2ETH:
AC500, Terminal Base, 2xslots, 2xETHERNET RJ45, 1xCOM,
24VDC, CAN connector, spring terminals
Version 07/2018
Schaltschrankaufbau
Variante A

Parts list

device tag	Quantity QU	Designation 1 Description Technical characteristics	Type number Order number	manufacturer supplier	part number function text
==ABB =AC500 +TB5620-2ETH	1 PCE	TB5620-2ETH-XC:AC500, Terminal Base, 2xslots, 2xETHERNET RJ45, 1xCOM, 24VDC, CAN TB5620-2ETH-XC:AC500, Terminal Base, 2xslots, 2xETHERNET RJ45, 1xCOM, 24VDC, CAN connector, spring terminals, Outdoor	TB5620-2ETH-XC 1SAP312300R0278	ABB	ABB.1SAP312300R0278

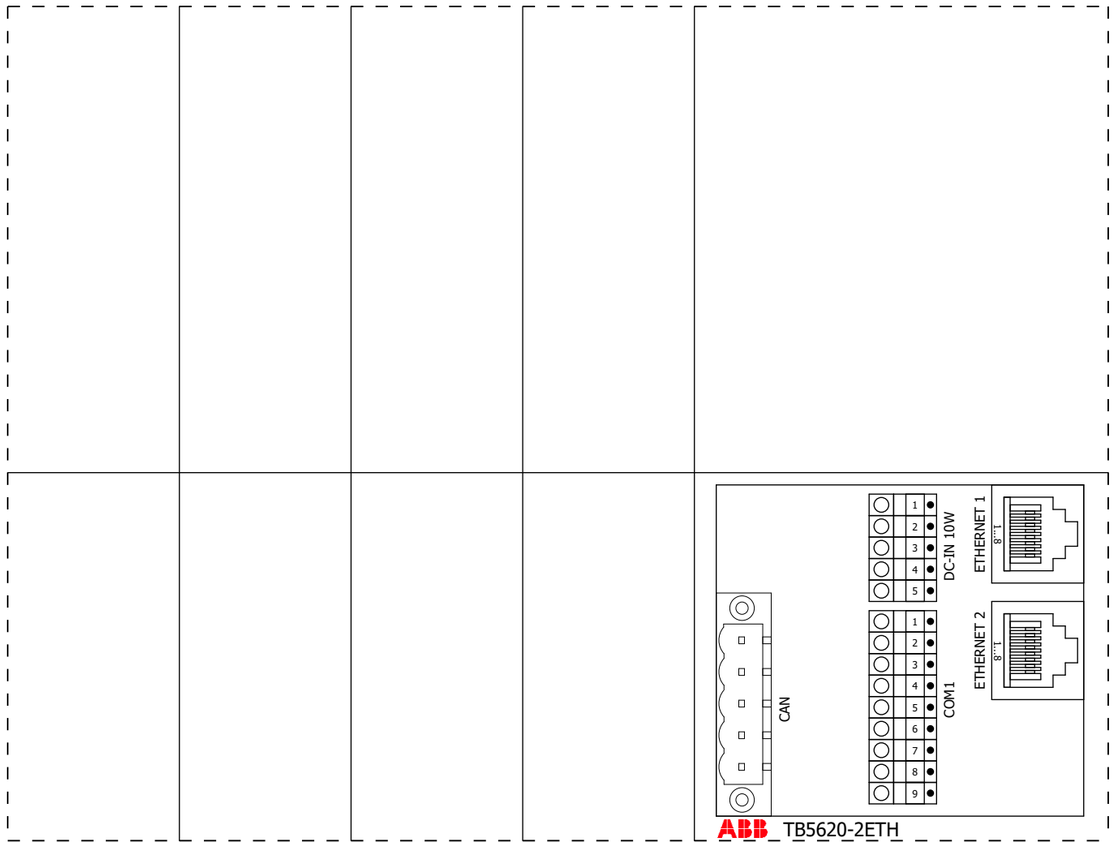

-A1

ABB\TB5640-2ETH.ema
TB5640-2ETH:
AC500, Terminal Base, 4xslots, 2xETHERNET RJ45, 1xCOM,
24VDC, CAN connector, spring terminals
Version 07/2018
Allpolig
Variante A

			Date	10.07.2018	18-204		TB5640-2ETH	== ABB	Page	68
			Ed.	TGO				= AC500	from	127
			Appr					++		
Modification	Date	Name	Original		Replacement of	Replaced by		+ TB5640-2ETH	Page	1

-A1
0

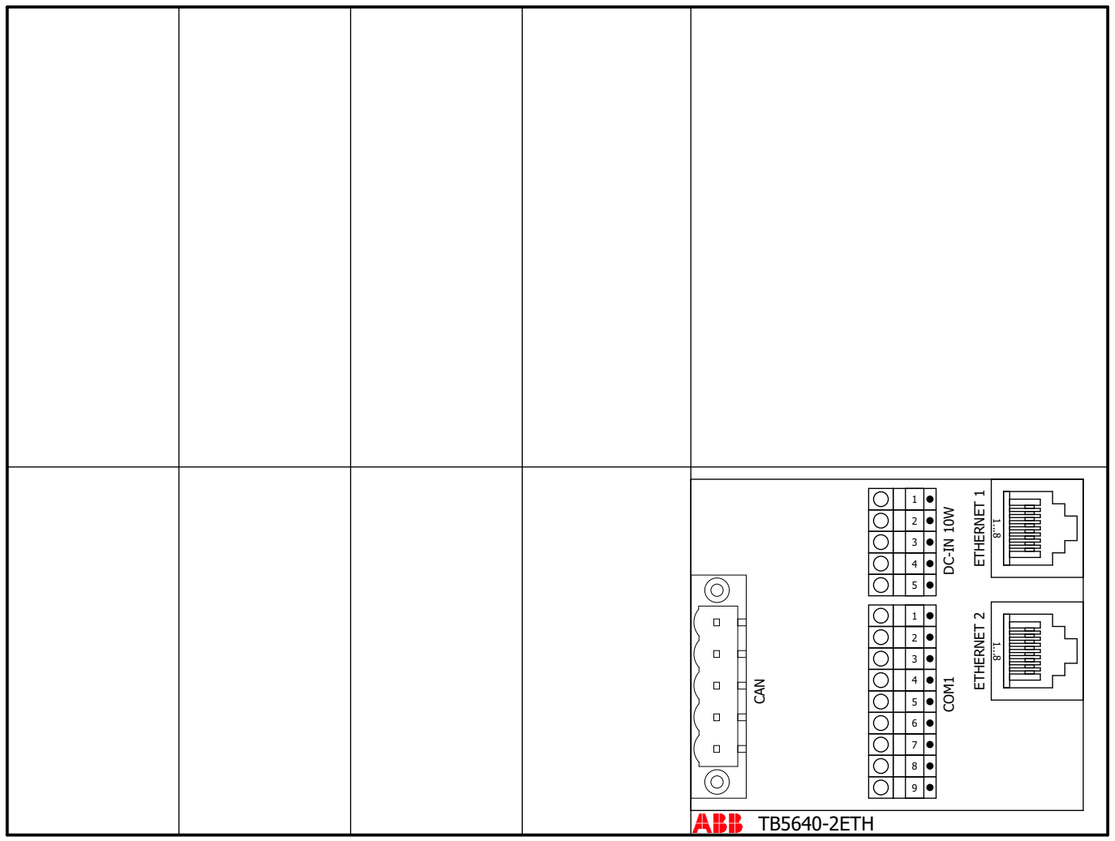

ABB\TB5640-2ETH.ema
TB5640-2ETH:
AC500, Terminal Base, 4xslots, 2xETHERNET RJ45, 1xCOM,
24VDC, CAN connector, spring terminals
Version 07/2018
Schaltschrankaufbau
Variante A

Parts list

device tag	Quantity QU	Designation 1 Description Technical characteristics	Type number Order number	manufacturer supplier	part number function text
==ABB =AC500 +TB5640-2ETH	1 PCE	TB5640-2ETH:AC500, Terminal Base, 4xslots, 2xETHERNET RJ45, 1xCOM, 24VDC, CAN TB5640-2ETH:AC500, Terminal Base, 4xslots, 2xETHERNET RJ45, 1xCOM, 24VDC, CAN connector, spring terminals	TB5640-2ETH 1SAP114300R0278	ABB	ABB.1SAP114300R0278
==ABB =AC500 +TB5640-2ETH	1 PCE	TB5640-2ETH-XC:AC500, Terminal Base, 4xslots, 2xETHERNET RJ45, 1xCOM, 24VDC, CAN TB5420-2ETH-XC:AC500, Terminal Base, 4xslots, 2xETHERNET RJ45, 1xCOM, 24VDC, CAN connector, spring terminals, Outdoor	TB5640-2ETH-XC 1SAP314300R0278	ABB	ABB.1SAP314300R0278

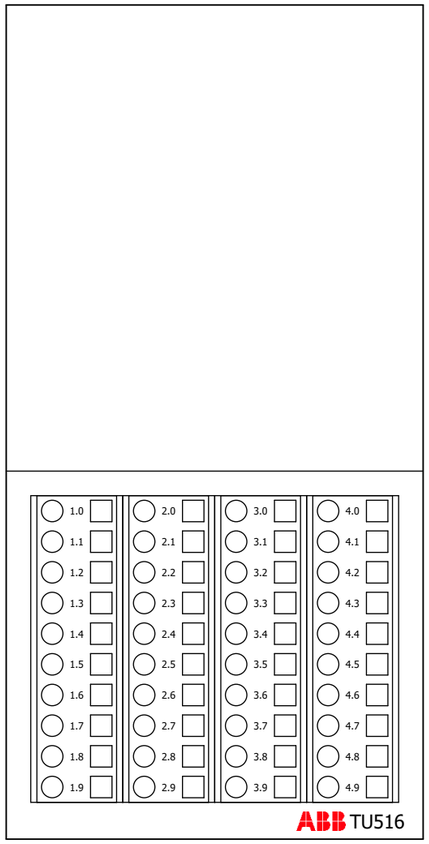

-A1

ABB\TU516.ema
TU516-H:S500,I/O Terminal Unit, 24VDC, Spring
Version 07/2018
Allpolig
Variante A

-A1
0

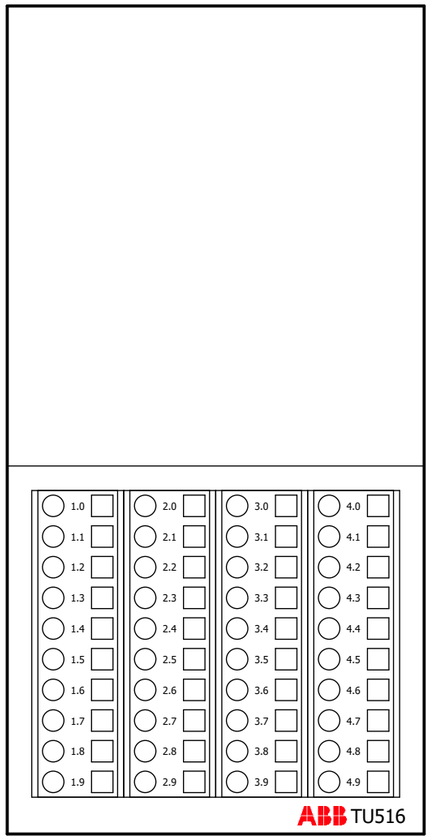

ABB\TU516.ema
TU516-H:S500,I/O Terminal Unit, 24VDC, Spring
Version 07/2018
Schaltschrankaufbau
Variante A

Parts list

device tag	Quantity QU	Designation 1 Description Technical characteristics	Type number Order number	manufacturer supplier	part number function text
==ABB =AC500 +TU516	1 PCE	TU516-H:S500,I/O Terminal Unit, 24VDC, Spring, Hot Swap TU516-H:S500,I/O Terminal Unit, 24VDC, Spring, Hot Swap	TU516-H 1SAP215000R0001	ABB	ABB.1SAP215000R0001
==ABB =AC500 +TU516	1 PCE	TU516-H-XC:S500,I/O Terminal Unit, 24VDC, Spring, Hot Swap, Extreme conditions TU516-H-XC:S500,I/O Terminal Unit, 24VDC, Spring, Hot Swap, Extreme conditions	TU516-H-XC 1SAP415000R0001	ABB	ABB.1SAP415000R0001

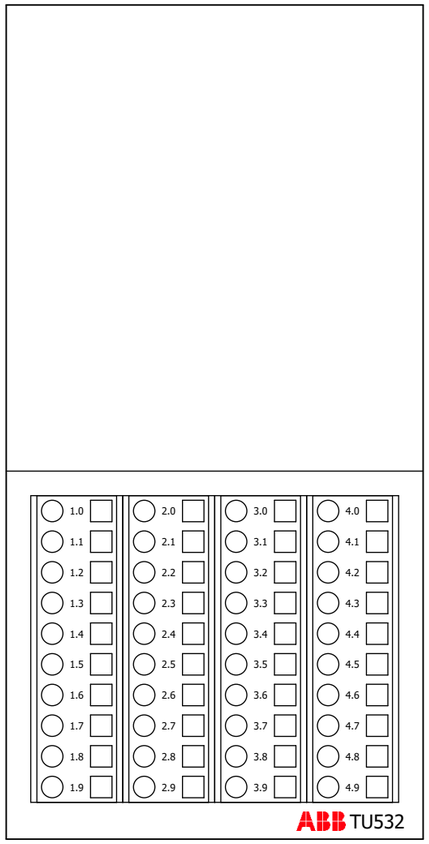

-A1

ABB\TU532.ema
TU532:S500,I/O Terminal Unit, 230VAC, Spring
Version 07/2018
Allpolig
Variante A

-A1
0

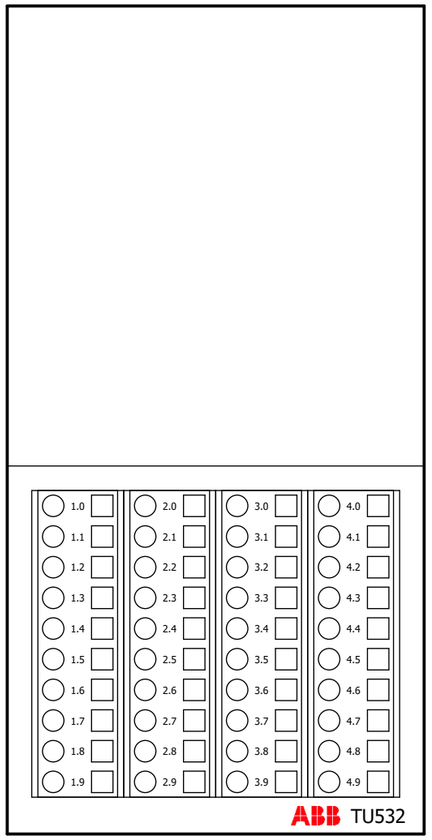

ABB\TU532.ema
TU532:S500,I/O Terminal Unit, 230VAC, Spring
Version 07/2018
Schaltschrankaufbau
Variante A

Parts list

device tag	Quantity QU	Designation 1 Description Technical characteristics	Type number Order number	manufacturer supplier	part number function text
==ABB =AC500 +TU532	1 PCE	TU532-H:S500,I/O Terminal Unit, 230VAC, Spring, Hot Swap TU532-H:S500,I/O Terminal Unit, 230VAC, Spring, Hot Swap	TU532-H 1SAP215100R0001	ABB	ABB.1SAP215100R0001
==ABB =AC500 +TU532	1 PCE	TU532-H-XC:S500,I/O Terminal Unit, 230VAC, Spring, Hot Swap TU532-H-XC:S500,I/O Terminal Unit, 230VAC, Spring, Hot Swap	TU532-H-XC 1SAP415100R0001	ABB	ABB.1SAP415100R0001

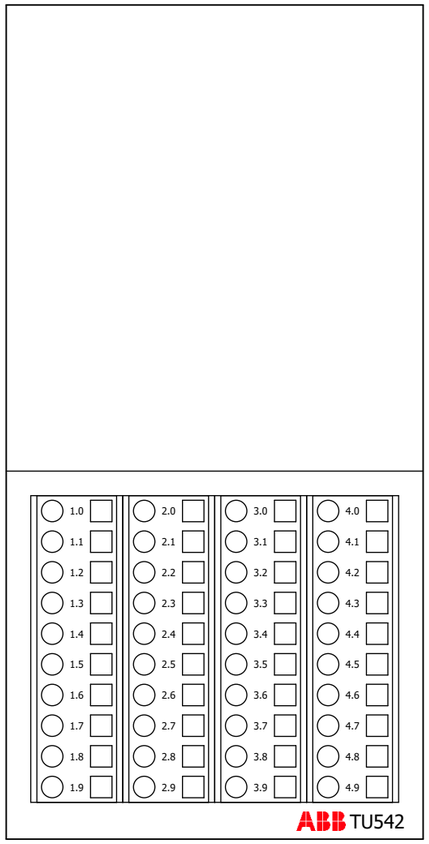

-A1

ABB\TU542.ema
TU542:S500,Terminal Unit, Spring, for high current modules
Version 07/2018
Allpolig
Variante A

-A1
0

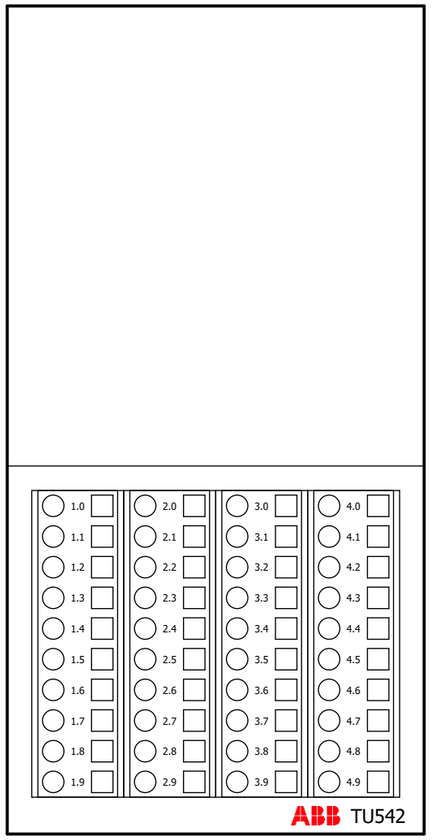

ABB\TU542.ema
TU542:S500,Terminal Unit, Spring, for high current modules
Version 07/2018
Schaltschrankaufbau
Variante A

Parts list

device tag	Quantity QU	Designation 1 Description Technical characteristics	Type number Order number	manufacturer supplier	part number function text
==ABB =AC500 +TU542	1 PCE	TU542:S500,Terminal Unit, Spring, for high current modules TU542:S500,Terminal Unit, Spring, for high current modules	TU542 1SAP213200R0001	ABB	ABB.1SAP213200R0001
==ABB =AC500 +TU542	1 PCE	TU542-H:S500,Terminal Unit, Spring, for high current modules, Hot Swap TU542-H:S500,Terminal Unit, Spring, for high current modules,Hot Swap	TU542-H 1SAP215200R0001	ABB	ABB.1SAP215200R0001
==ABB =AC500 +TU542	1 PCE	TU542-H-XC:S500,Terminal Unit, Spring, for high current modules, Hot Swap TU542-H-XC:S500,Terminal Unit, Spring, for high current modules,Hot Swap,Extreme conditions	TU542-H-XC 1SAP415200R0001	ABB	ABB.1SAP415200R0001

-A1

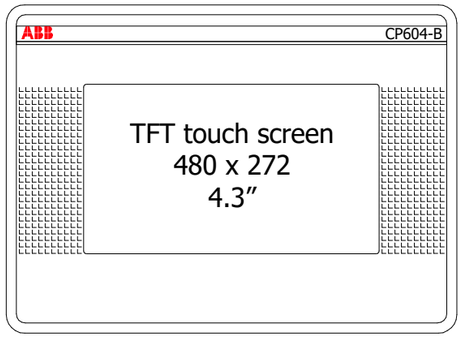

ABB\CP604-B.ema
CP604 Control Panel 4.3" TFT touch screen,
64 K colors, 480x272 pixel, PB610-B runtime license
Version 07/2018
Allpolig
Variante A

0	1	2	3	4	5	6	7	8	9

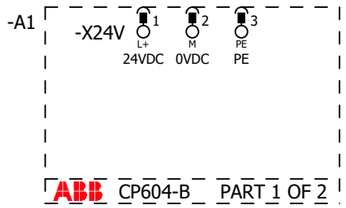

ABB\CP604-B.ema
CP604 Control Panel 4.3" TFT touch screen,
64 K colors, 480x272 pixel, PB610-B runtime license
Version 07/2018
Allpolig
Variante B

1 3

			Date	10.07.2018	18-204		CP604-B	== ABB	Page 81
			Ed.	TGO				= CP6xx	from 127
			Appr					++	
Modification	Date	Name	Original		Replacement of	Replaced by		+ CP604-B	Page 2

0	1	2	3	4	5	6	7	8	9

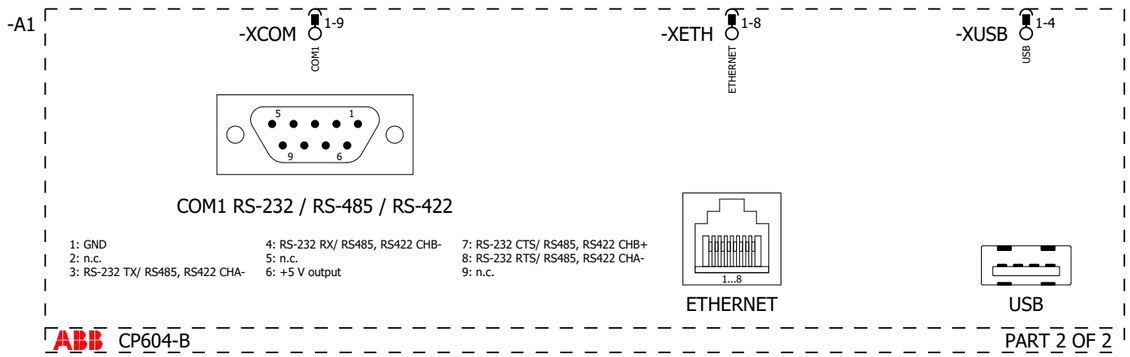

Ethernet Netzwerkadresse:

???.???.???.???

ABB\CP604-B.ema
CP604 Control Panel 4.3" TFT touch screen,
64 K colors, 480x272 pixel, PB610-B runtime license
Version 07/2018
Einpolig
Variante A

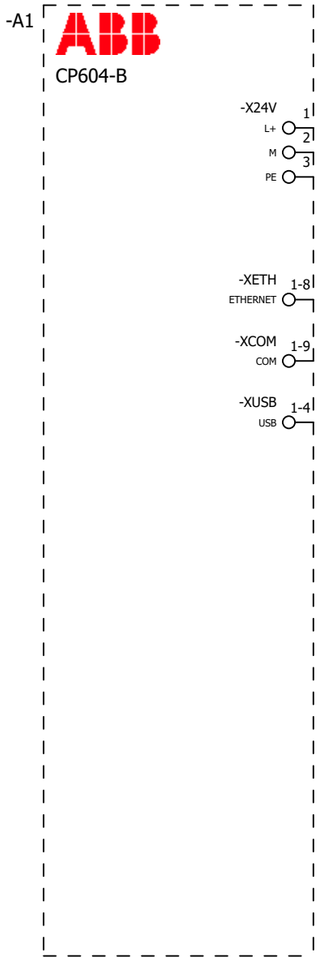

ABB\CP604-B.ema
CP604 Control Panel 4.3" TFT touch screen,
64 K colors, 480x272 pixel, PB610-B runtime license
Version 07/2018
Übersicht
Variante A

-A1
ABB.1SAP504100R2001
CP604-B
1

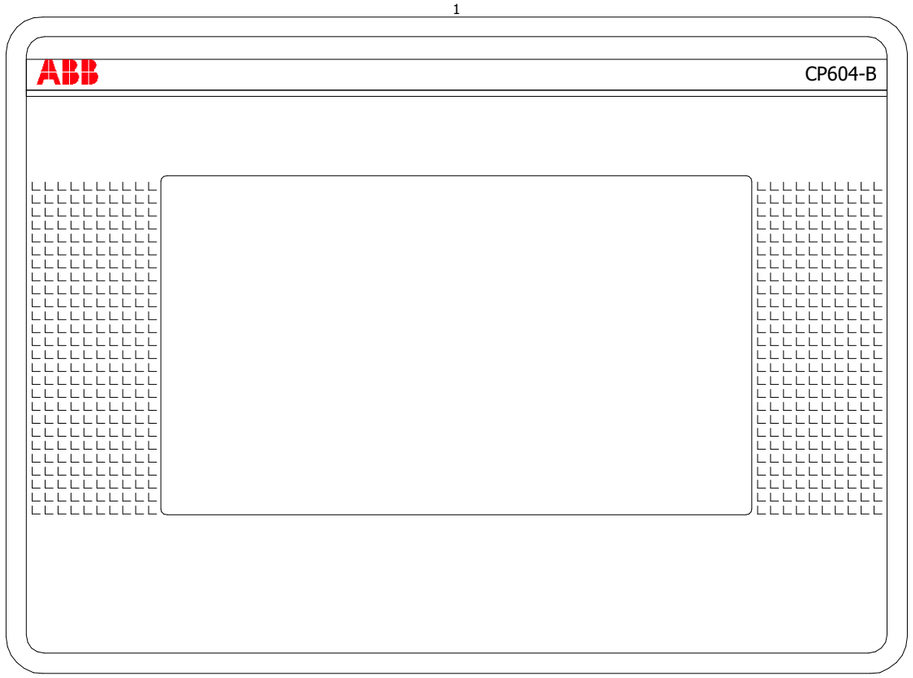

ABB\CP604-B.ema
CP604 Control Panel 4.3" TFT touch screen,
64 K colors, 480x272 pixel, PB610-B runtime license
Version 07/2018
Schaltschrankaufbau
Variante A

			Date	10.07.2018	18-204		CP604-B	== ABB	Page	84
			Ed.	TGO				= CP6xx	from	127
			Appr					++		
Modification	Date	Name	Original		Replacement of	Replaced by		+ CP604-B	Page	5

Parts list

device tag	Quantity QU	Designation 1 Description Technical characteristics	Type number Order number	manufacturer supplier	part number function text
==ABB =CP6xx +CP604-B -A1	1 PCE	CP604-B:CP600-eCo, control panel, black, TFT grafic display, touchscreen, 4.3", 480x272 CP604-B Control Panel 4.3" TFT touch screen, black, 64 K colors, 480x272 pixel, PB610 runtime license	CP604-B 1SAP504100R2001	ABB	ABB.1SAP504100R2001

-A1

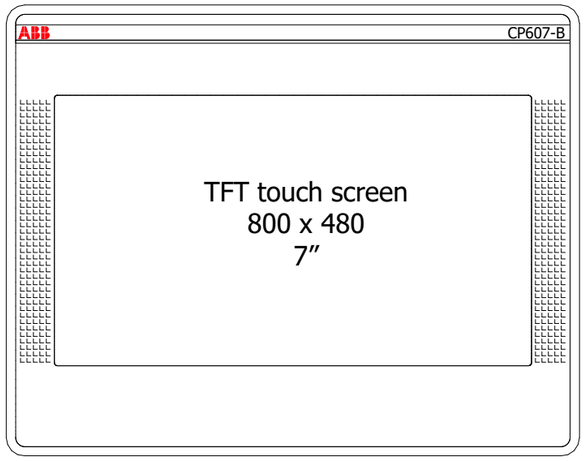

ABB\CP607-B.ema
CP607-B:
CP600-eCo, control panel, black, TFT grafic display, touchscreen, 7", 800x480 pixel, PB610 runtime license
Version 07/2018
Allpolig
Variante A

0	1	2	3	4	5	6	7	8	9

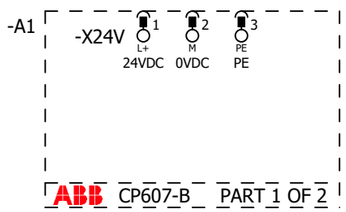

ABB\CP607-B.ema
CP607-B:
CP600-eCo, control panel, black, TFT grafic display, touchscreen, 7", 800x480 pixel, PB610 runtime license
Version 07/2018
Allpolig
Variante B

0	1	2	3	4	5	6	7	8	9

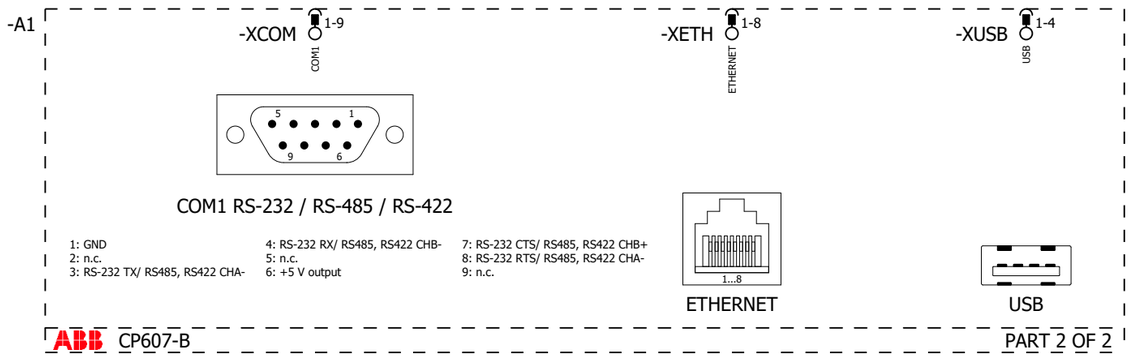

Ethernet Netzwerkadresse:

???.???.???.???

ABB\CP607-B.ema
CP607-B:
CP600-eCo, control panel, black, TFT grafic display, touchscreen, 7", 800x480 pixel, PB610 runtime license
Version 07/2018
Einpolig
Variante A

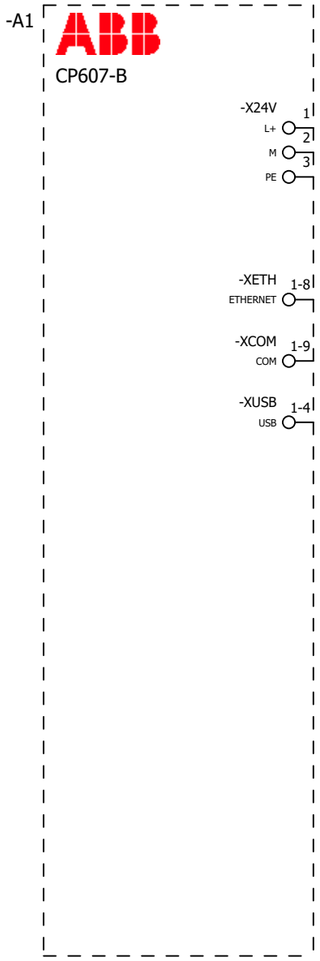

ABB\CP607-B.ema
CP607-B:
CP600-eCo, control panel, black, TFT grafic display, touchscreen, 7", 800x480 pixel, PB610 runtime license
Version 07/2018
Übersicht
Variante A

			Date	10.07.2018	18-204		CP607-B	== ABB	Page	89
			Ed.	TGO				= CP6xx	from	127
			Appr					++		
Modification	Date	Name	Original		Replacement of	Replaced by		+ CP607-B	Page	4

-A1
ABB.1SAP507100R2001
CP607-B
1

ABB\CP607-B.ema
CP607-B:
CP600-eCo, control panel, black, TFT grafic display, touchscreen, 7", 800x480
pixel, PB610 runtime license
Version 07/2018
Schaltschrankaufbau
Variante A

Parts list

device tag	Quantity QU	Designation 1 Description Technical characteristics	Type number Order number	manufacturer supplier	part number function text
==ABB =CP6xx +CP607-B -A1	1 PCE	CP607-B:CP600-eCo, control panel, black, TFT grafic display, touchscreen, 7", 800x480 CP607-B Control Panel 7" TFT touch screen, black, 64 K colors, 800x480 pixel, PB610 runtime license	CP607-B 1SAP507100R2001	ABB	ABB.1SAP507100R2001

-A1

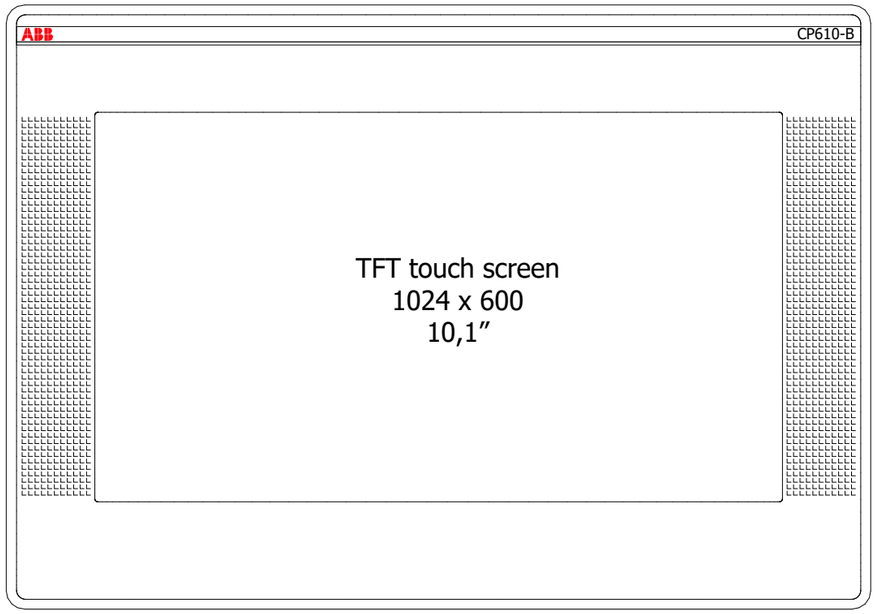

ABB\CP610-B.ema
CP610-B:
CP600-eCo, control panel, black, TFT grafic display, touchscreen, 10.1", 1024x600 pixel, PB610 runtime license
Version 07/2018
Allpolig
Variante A

0	1	2	3	4	5	6	7	8	9

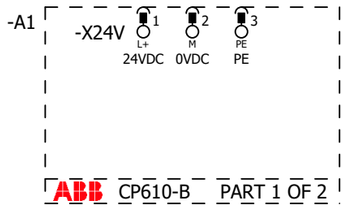

ABB\CP610-B.ema
CP610-B:
CP600-eCo, control panel, black, TFT grafic display, touchscreen, 10.1", 1024x600 pixel, PB610 runtime license
Version 07/2018
Allpolig
Variante B

1 3

			Date	10.07.2018	18-204		CP610-B	== ABB	Page 93
			Ed.	TGO				= CP6xx	from 127
			Appr					++	
Modification	Date	Name	Original		Replacement of	Replaced by		+ CP610-B	Page 2

0	1	2	3	4	5	6	7	8	9

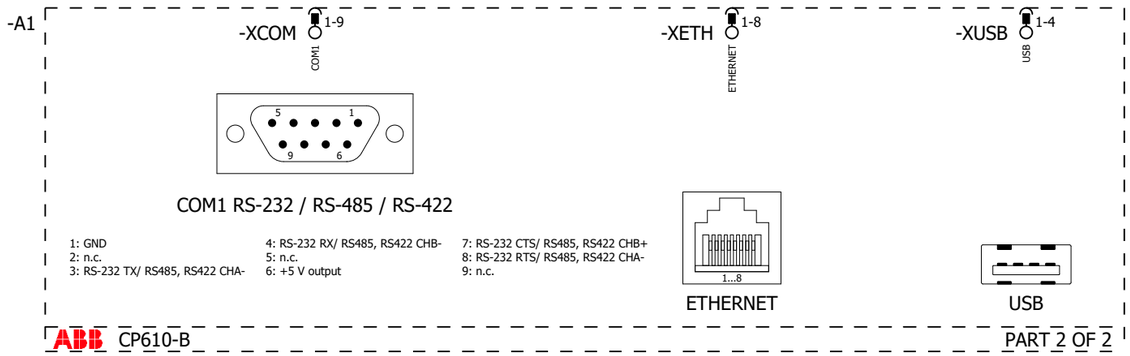

Ethernet Netzwerkadresse:

???.???.???.???

ABB\CP610-B.ema
CP610-B:
CP600-eCo, control panel, black, TFT grafic display, touchscreen, 10.1", 1024x600 pixel, PB610 runtime license
Version 07/2018
Einpolig
Variante A

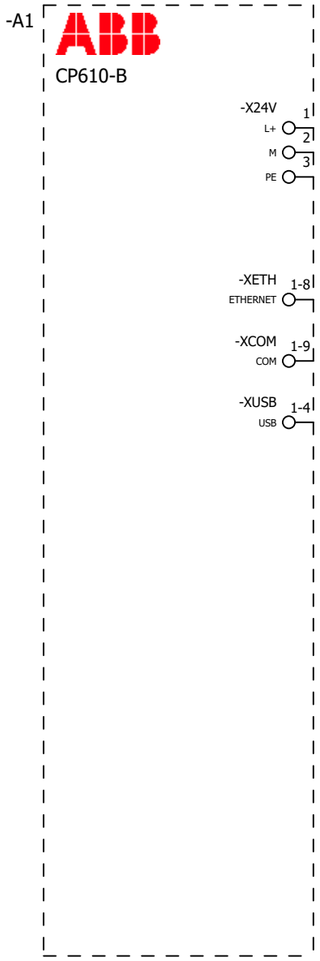

ABB\CP610-B.ema
CP610-B:
CP600-eCo, control panel, black, TFT grafic display, touchscreen, 10.1", 1024x600 pixel, PB610 runtime license
Version 07/2018
Übersicht
Variante A

-A1
ABB.1SAP510100R2001
CP610-B
1

ABB\CP610-B.ema
CP610-B:
CP600-eCo, control panel, black, TFT grafic display, touchscreen, 10.1", 1024x600 pixel, PB610 runtime license
Version 07/2018
Schaltschrankaufbau
Variante A

Parts list

device tag	Quantity QU	Designation 1 Description Technical characteristics	Type number Order number	manufacturer supplier	part number function text
==ABB =CP6xx +CP610-B -A1	1 PCE	CP610-B:CP600-eCo, control panel, black, TFT grafic display, touchscreen, 10.1", 1024x600 CP610-B Control Panel 10.1" TFT touch screen, black, 64 K colors, 1024x600 pixel, PB610 runtime license	CP610-B 1SAP510100R2001	ABB	ABB.1SAP510100R2001

-A1

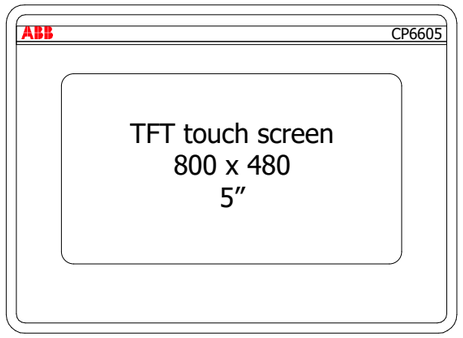

ABB\CP6605.ema
CP6605 Control Panel, TFT graphical display,
multi-touchscreen, 5”, 800 x 480 pixel
Version 07/2018
Allpolig
Variante A

0	1	2	3	4	5	6	7	8	9

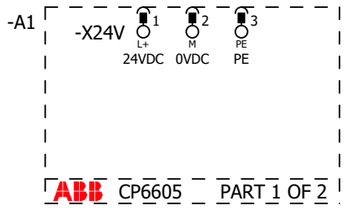

ABB\CP6605.ema
CP6605 Control Panel, TFT graphical display,
multi-touchscreen, 5”, 800 x 480 pixel
Version 07/2018
Allpolig
Variante B

0	1	2	3	4	5	6	7	8	9

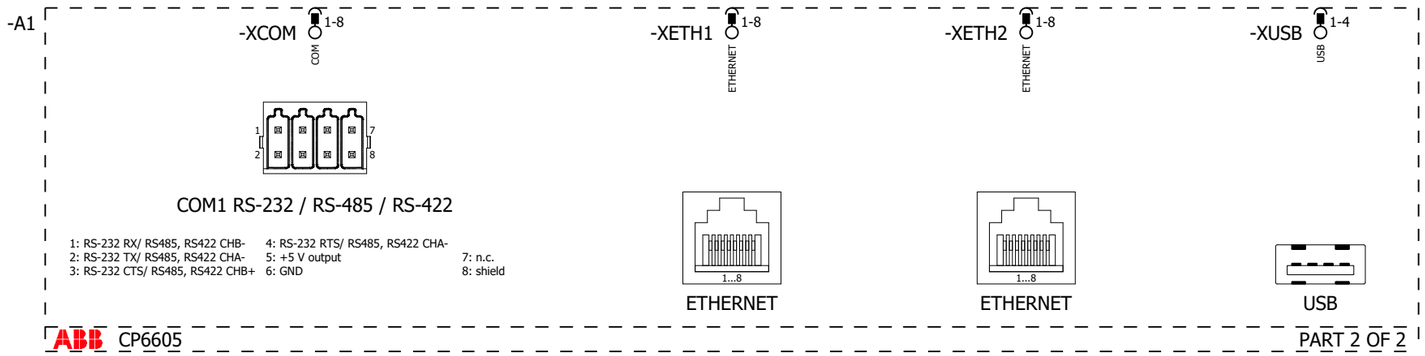

Ethernet Netzwerkadresse:

???.???.???.???

ABB\CP6605.ema
CP6605 Control Panel, TFT graphical display,
multi-touchscreen, 5”, 800 x 480 pixel
Version 07/2018
Einpolig
Variante A

2 4

			Date	10.07.2018	18-204		CP6605	== ABB	Page 100
			Ed.	TGO				= CP6xx	from 127
			Appr					++	
Modification	Date	Name	Original		Replacement of	Replaced by		+ CP6605	Page 3

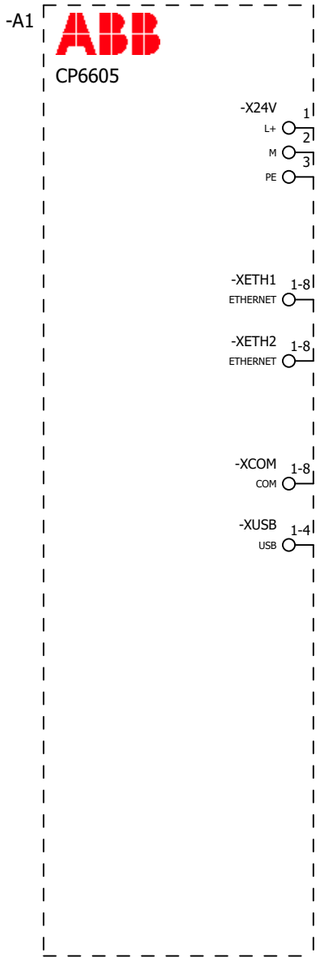

ABB\CP6605.ema
CP6605 Control Panel, TFT graphical display,
multi-touchscreen, 5", 800 x 480 pixel
Version 07/2018
Übersicht
Variante A

			Date	10.07.2018	18-204		CP6605	== ABB	Page	101
			Ed.	TGO				= CP6xx	from	127
			Appr					++		
Modification	Date	Name	Original		Replacement of	Replaced by		+ CP6605	Page	4

-A1
ABB.1SAP560510R0001
CP6605
1

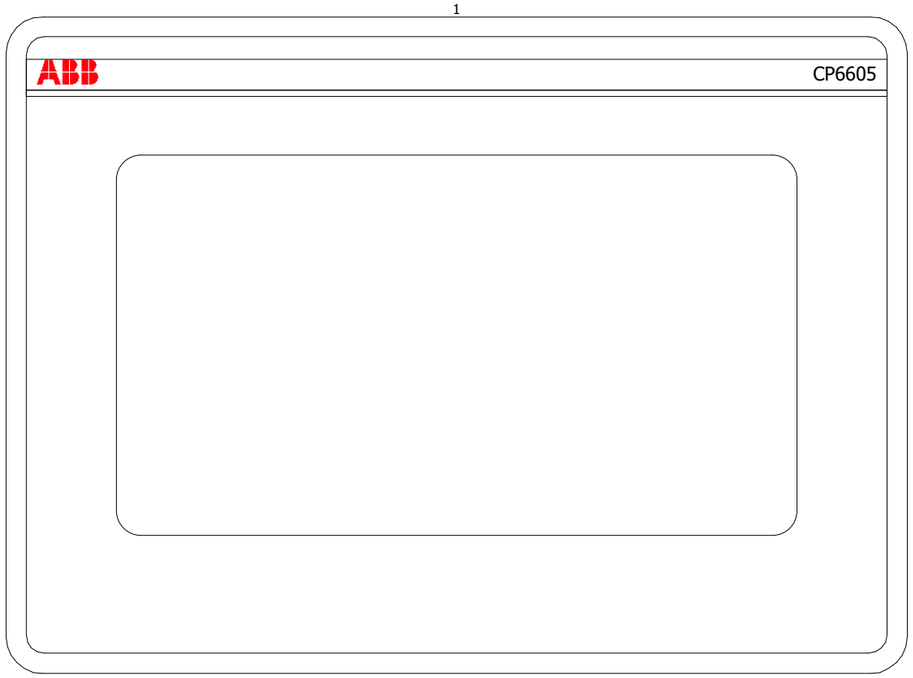

ABB\CP6605.ema
CP6605 Control Panel, TFT graphical display,
multi-touchscreen, 5”, 800 x 480 pixel
Version 07/2018
Schaltschrankaufbau
Variante A

Parts list

device tag	Quantity QU	Designation 1 Description Technical characteristics	Type number Order number	manufacturer supplier	part number function text
==ABB =CP6xx +CP6605 -A1	1 PCE	CP6605 Control Panel, TFT graphical display, multi-touchscreen, 5”, 800 x 480 pixel CP6605 Control Panel 5" TFT multi-touch screen, 64 K colors, 800 x 480 pixel, for PB610 applications	CP6605 1SAP560510R0001	ABB	ABB.1SAP560510R0001

-A1

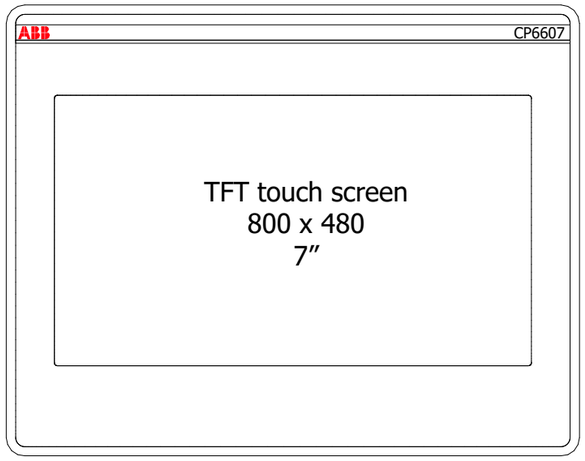

ABB\CP6607.ema
CP6607 Control Panel, TFT graphical display,
multi-touchscreen, 7”, 800 x 480 pixel
Version 07/2018
Allpolig
Variante A

0	1	2	3	4	5	6	7	8	9

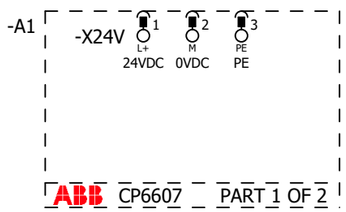

ABB\CP6607.ema
CP6607 Control Panel, TFT graphical display,
multi-touchscreen, 7”, 800 x 480 pixel
Version 07/2018
Allpolig
Variante B

0	1	2	3	4	5	6	7	8	9

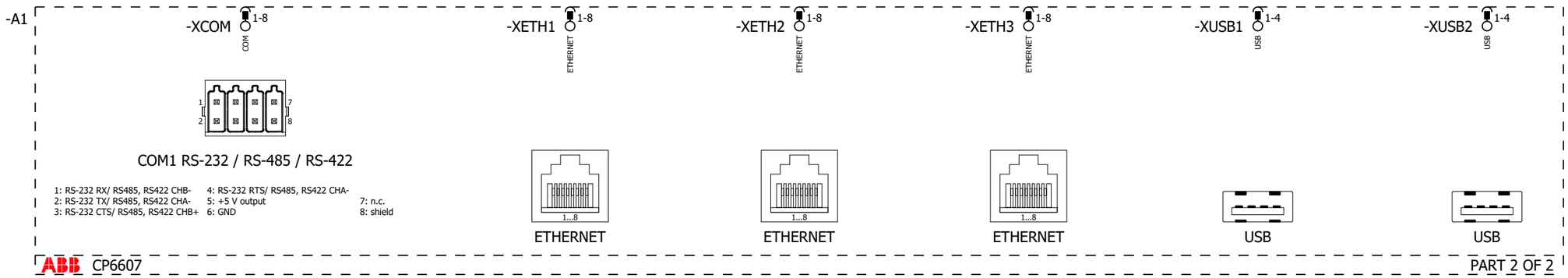

Ethernet Netzwerkadresse:

???.???.???.???

ABB\CP6607.ema
CP6607 Control Panel, TFT graphical display,
multi-touchscreen, 7”, 800 x 480 pixel
Version 07/2018
Einpolig
Variante A

2 4

			Date	10.07.2018	18-204		CP6607	== ABB	Page 106
			Ed.	TGO				= CP6xx	from 127
			Appr					++	
Modification	Date	Name	Original		Replacement of	Replaced by		+ CP6607	Page 3

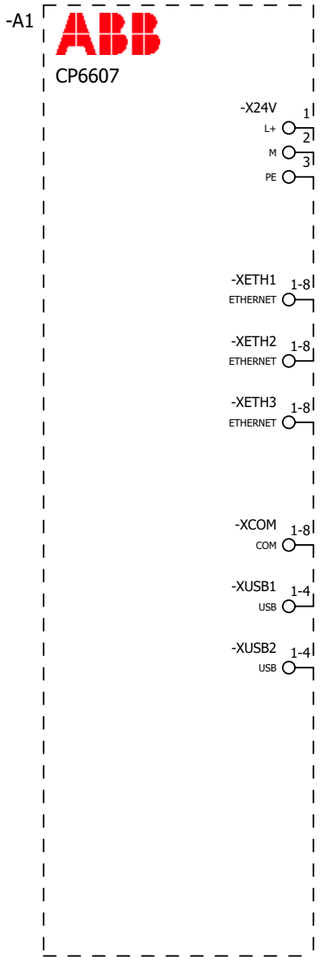

ABB\CP6607.ema
CP6607 Control Panel, TFT graphical display,
multi-touchscreen, 7”, 800 x 480 pixel
Version 07/2018
Übersicht
Variante A

			Date	10.07.2018	18-204		CP6607	== ABB	Page	107
			Ed.	TGO				= CP6xx	from	127
			Appr					++		
Modification	Date	Name	Original		Replacement of	Replaced by		+ CP6607	Page	4

-A1
ABB.1SAP560710R0001
CP6607
1

ABB\CP6607.ema
CP6607 Control Panel, TFT graphical display,
multi-touchscreen, 7”, 800 x 480 pixel
Version 07/2018
Schaltschrankaufbau
Variante A

Parts list

device tag	Quantity QU	Designation 1 Description Technical characteristics	Type number Order number	manufacturer supplier	part number function text
==ABB =CP6xx +CP6607 -A1	1 PCE	CP6607 Control Panel, TFT graphical display, multi-touchscreen, 7”, 800 x 480 pixel CP6607 Control Panel 7" TFT multi-touch screen, 16 M colors, 800 x 480 pixel, for PB610 applications	CP6607 1SAP560710R0001	ABB	ABB.1SAP560710R0001

-A1

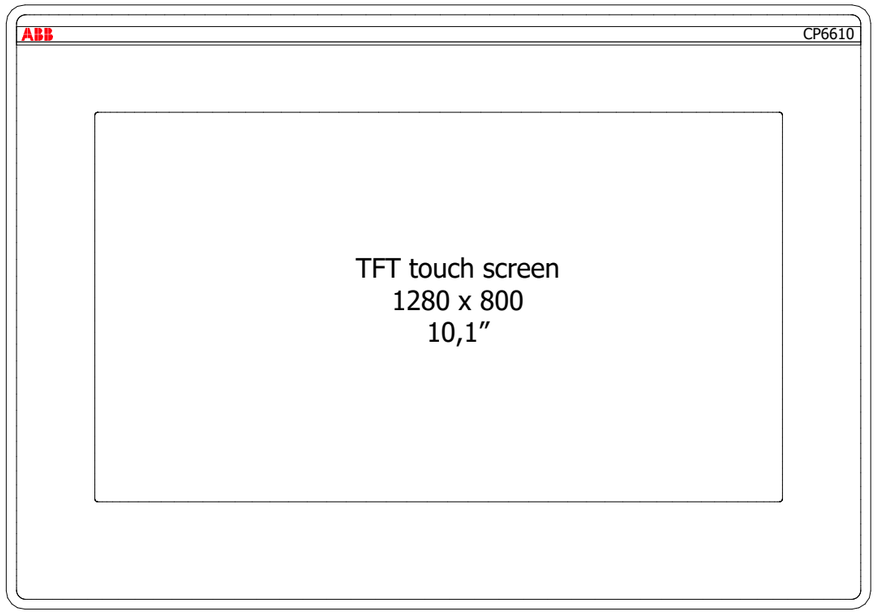

ABB\CP6610.ema
CP6610 Control Panel, TFT graphical display,
multi-touchscreen, 10.1”, 1280 x 800 pixel
Version 07/2018
Allpolig
Variante A

			Date	10.07.2018	18-204		CP6610	== ABB	Page	110
			Ed.	TGO				= CP6xx	from	127
			Appr					++		
Modification	Date	Name	Original		Replacement of	Replaced by		+ CP6610	Page	1

0	1	2	3	4	5	6	7	8	9

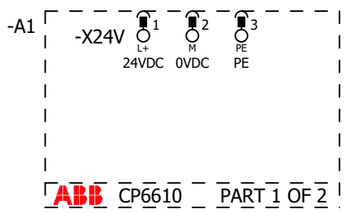

ABB\CP6610.ema
CP6610 Control Panel, TFT graphical display,
multi-touchscreen, 10.1”, 1280 x 800 pixel
Version 07/2018
Allpolig
Variante B

0	1	2	3	4	5	6	7	8	9

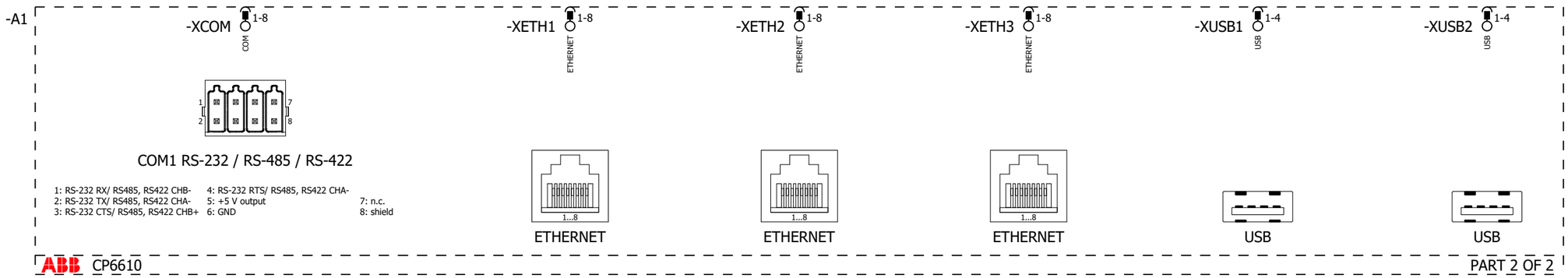

Ethernet Netzwerkadresse:

???.???.???.???

ABB\CP6610.ema
CP6610 Control Panel, TFT graphical display,
multi-touchscreen, 10.1”, 1280 x 800 pixel
Version 07/2018
Einpolig
Variante A

2 4

			Date	10.07.2018	18-204		CP6610	== ABB	Page 112
			Ed.	TGO				= CP6xx	from 127
			Appr					++	
Modification	Date	Name	Original		Replacement of	Replaced by		+ CP6610	Page 3

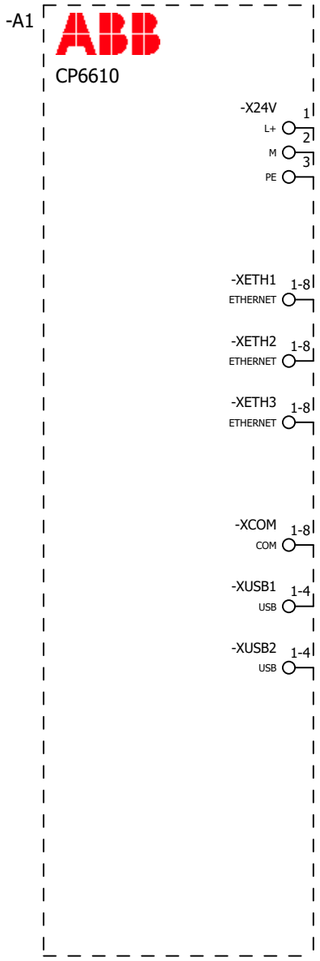

ABB\CP6610.ema
CP6610 Control Panel, TFT graphical display,
multi-touchscreen, 10.1”, 1280 x 800 pixel
Version 07/2018
Übersicht
Variante A

			Date	10.07.2018	18-204		CP6610	== ABB	Page 113
			Ed.	TGO				= CP6xx	from 127
			Appr					++	
Modification	Date	Name	Original		Replacement of	Replaced by		+ CP6610	Page 4

-A1
ABB.1SAP561010R0001
CP6610
1

ABB\CP6610.ema
CP6610 Control Panel, TFT graphical display,
multi-touchscreen, 10.1”, 1280 x 800 pixel
Version 07/2018
Schaltschrankaufbau
Variante A

Parts list

device tag	Quantity QU	Designation 1 Description Technical characteristics	Type number Order number	manufacturer supplier	part number function text
==ABB =CP6xx +CP6610 -A1	1 PCE	CP6610 Control Panel, TFT graphical display, multi-touchscreen, 10.1”, 1280 x 800 pixel CP6610 Control Panel 10.1" TFT multi-touch screen, 16 M colors, 1280 x 800 pixel, for PB610 applications	CP6610 1SAP561010R0001	ABB	ABB.1SAP561010R0001

-A1

ABB\CP6615.ema
CP6615 Control Panel, TFT graphical display,
multi-touchscreen, 15.6”, 1366 x 768 pixel
Version 07/2018
Allpolig
Variante A

			Date	10.07.2018	18-204		ABB	CP6615	== ABB	Page 116
			Ed.	TGO					= CP6xx	from 127
			Appr						++	
Modification	Date	Name	Original		Replacement of	Replaced by			+ CP6615	Page 1

0	1	2	3	4	5	6	7	8	9

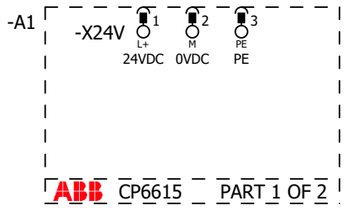

ABB\CP6615.ema
CP6615 Control Panel, TFT graphical display,
multi-touchscreen, 15.6”, 1366 x 768 pixel
Version 07/2018
Allpolig
Variante B

0	1	2	3	4	5	6	7	8	9

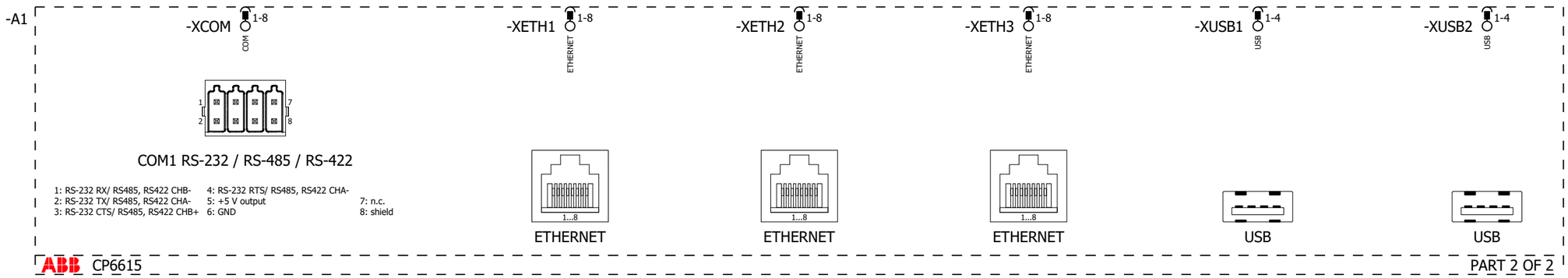

Ethernet Netzwerkadresse:

???.???.???.???

ABB\CP6615.ema
CP6615 Control Panel, TFT graphical display,
multi-touchscreen, 15.6”, 1366 x 768 pixel
Version 07/2018
Einpolig
Variante A

2 4

			Date	10.07.2018	18-204		CP6615	== ABB	Page 118
			Ed.	TGO				= CP6xx	from 127
			Appr					++	
Modification	Date	Name	Original		Replacement of	Replaced by		+ CP6615	Page 3

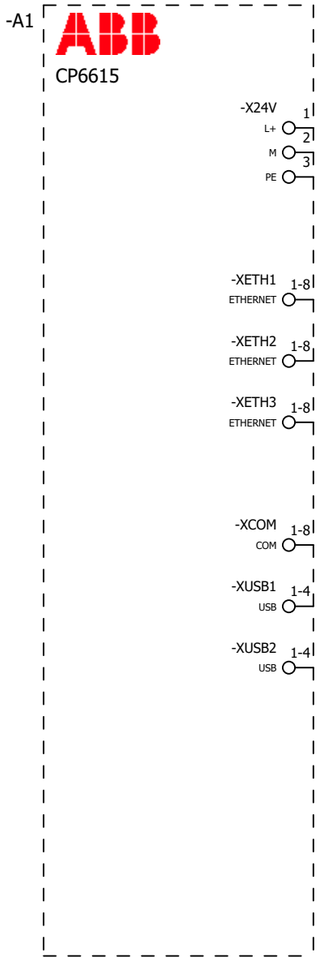

ABB\CP6615.ema
CP6615 Control Panel, TFT graphical display,
multi-touchscreen, 15.6”, 1366 x 768 pixel
Version 07/2018
Übersicht
Variante A

			Date	10.07.2018	18-204		CP6615	== ABB	Page 119
			Ed.	TGO				= CP6xx	from 127
			Appr					++	
Modification	Date	Name	Original		Replacement of	Replaced by		+ CP6615	Page 4

-A1
ABB.1SAP561510R0001
CP6615
1

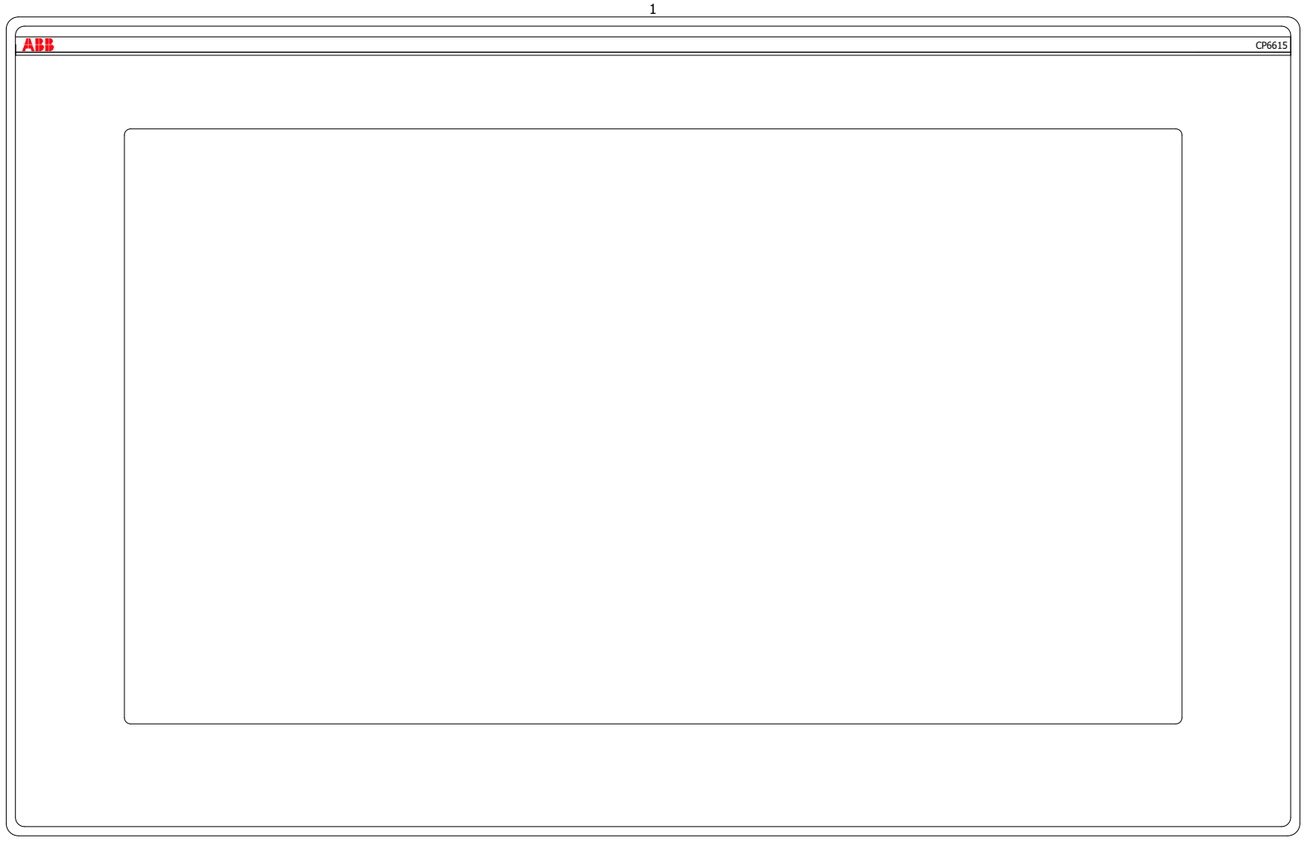

ABB\CP6615.ema
CP6615 Control Panel, TFT graphical display,
multi-touchscreen, 15.6”, 1366 x 768 pixel
Version 07/2018
Schaltschrankaufbau
Variante A

Parts list

device tag	Quantity QU	Designation 1 Description Technical characteristics	Type number Order number	manufacturer supplier	part number function text
==ABB =CP6xx +CP6615 -A1	1 PCE	CP6615 Control Panel, TFT graphical display, multi-touchscreen, 15.6”, 1366 x 768 pixel CP6615 Control Panel 15.6" TFT multi-touch screen, 16 M colors, 1366 x 768 pixel, for PB610 applications	CP6615 1SAP561510R0001	ABB	ABB.1SAP561510R0001

-A1

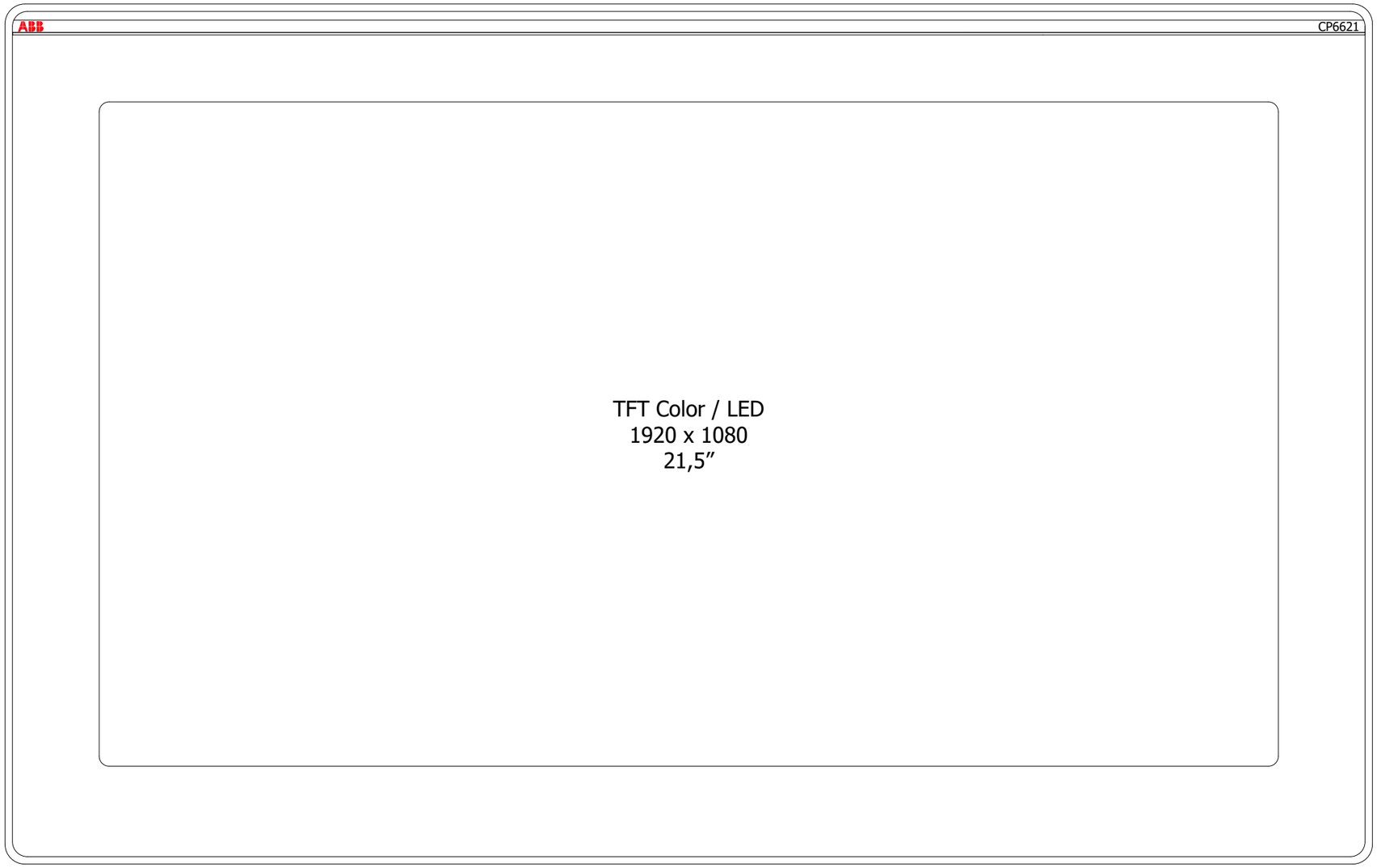

ABB\CP6621.ema
CP6621 Control Panel, TFT graphical display,
multi-touchscreen, 21.5”, 1920 x 1080 pixel
Version 07/2018
Allpolig
Variante A

0	1	2	3	4	5	6	7	8	9

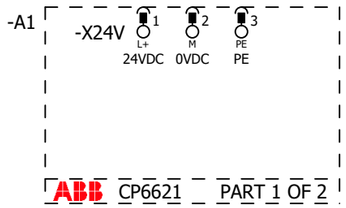

ABB\CP6621.ema
CP6621 Control Panel, TFT graphical display,
multi-touchscreen, 21.5”, 1920 x 1080 pixel
Version 07/2018
Allpolig
Variante B

0	1	2	3	4	5	6	7	8	9

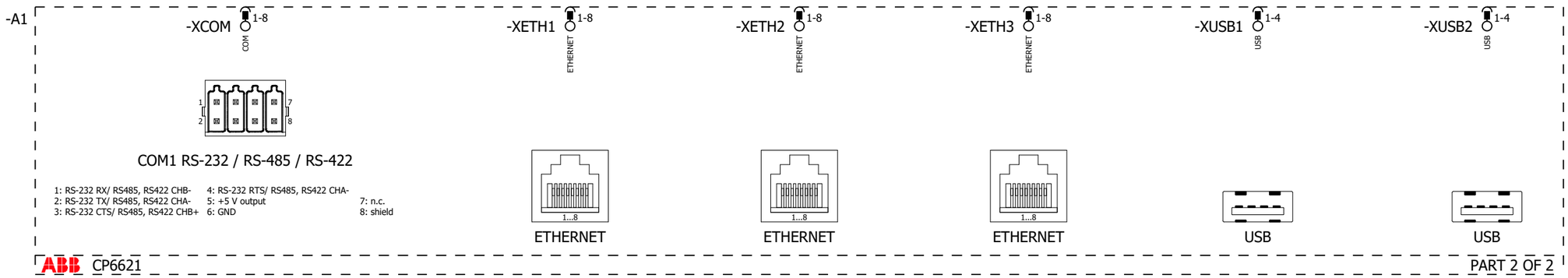

Ethernet Netzwerkadresse:

???.???.???.???

ABB\CP6621.ema
CP6621 Control Panel, TFT graphical display,
multi-touchscreen, 21.5”, 1920 x 1080 pixel
Version 07/2018
Einpolig
Variante A

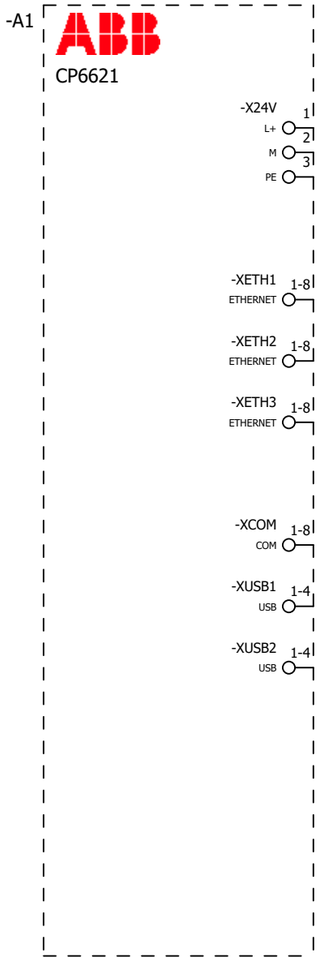

ABB\CP6621.ema
CP6621 Control Panel, TFT graphical display,
multi-touchscreen, 21.5”, 1920 x 1080 pixel
Version 07/2018
Übersicht
Variante A

			Date	10.07.2018	18-204		CP6621	== ABB	Page	125
			Ed.	TGO				= CP6xx	from	127
			Appr					++		
Modification	Date	Name	Original		Replacement of	Replaced by		+ CP6621	Page	4

-A1
ABB.1SAP562110R0001
CP6621
1

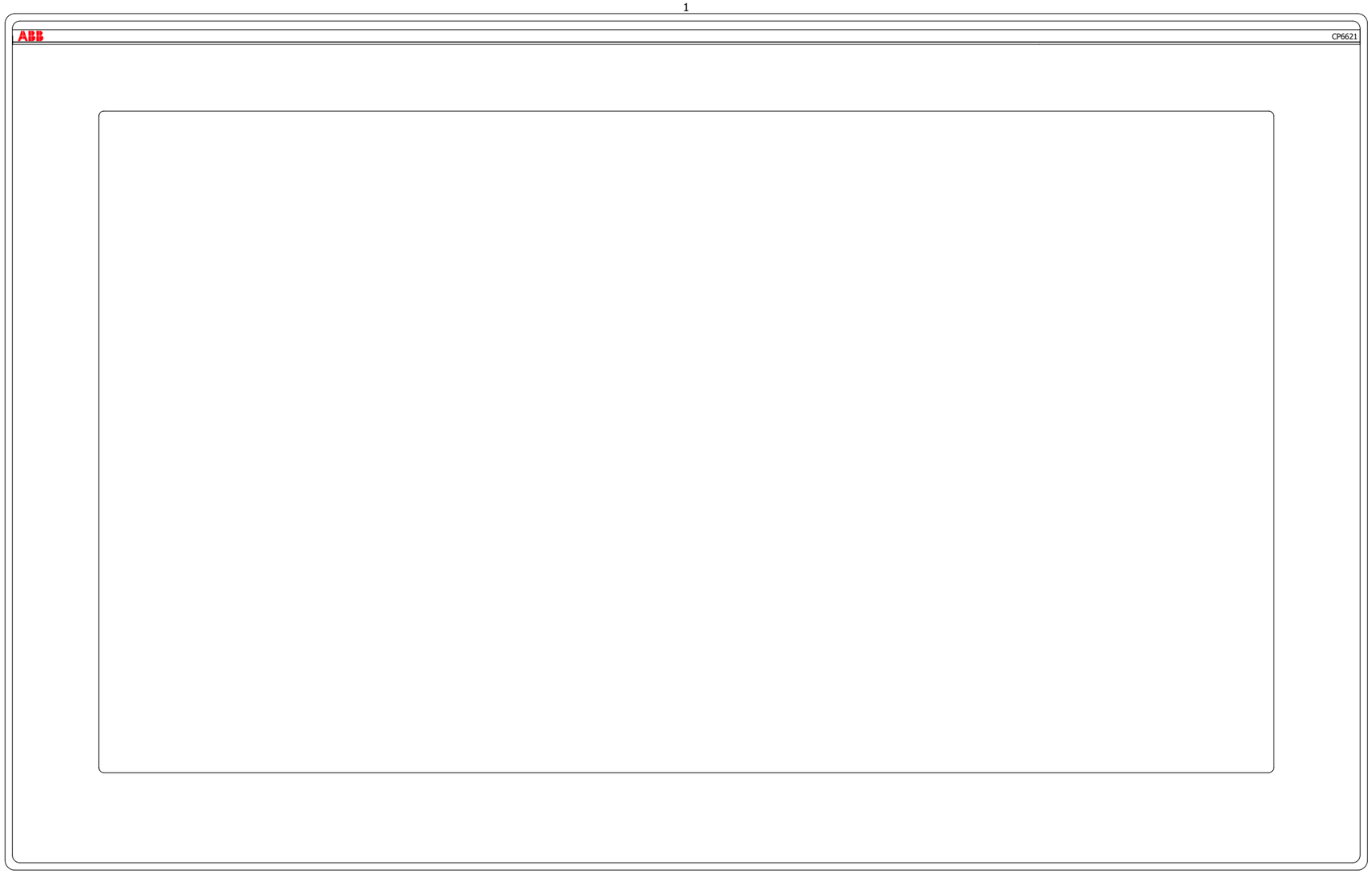

ABB\CP6621.ema
CP6621 Control Panel, TFT graphical display,
multi-touchscreen, 21.5”, 1920 x 1080 pixel
Version 07/2018
Schaltschrankaufbau
Variante A

Parts list

device tag	Quantity QU	Designation 1 Description Technical characteristics	Type number Order number	manufacturer supplier	part number function text
==ABB =CP6xx +CP6621 -A1	1 PCE	CP6621 Control Panel, TFT graphical display, multi-touchscreen, 21.5”, 1920 x 1080 pixel CP6621 Control Panel 21.5" TFT multi-touch screen, 16 M colors, 1920 x 1080 pixel, for PB610 applications	CP6621 1SAP562110R0001	ABB	ABB.1SAP562110R0001