ABB INDUSTRIAL DRIVES

ACS580MV Hardware manual (200 kW to 6300 kW, 3.3 kV to 11 kV)

List of related manuals

Drive hardware manuals and guides	Code (English)
ACS580MV hardware manual	*2UBB004520*
ACS-AP-X assistant control panels user's manual	*3AUA0000085685*
ACS580MV Engineering Guideline	*2UBB013672*
ACS580MV Gravity Center for Packing	*2UBB022468*
User's manual Start-up and maintenance PC tool Drive composer	*3AUA0000094606*
ACS580MV Preventive Maintenance Schedule	*2UBB022658*
ACS580MV Synchronized Bypass Unit Hardware Manual	*2UBB005655E01*
ACS580MV Wiring Diagram of Synchronized Bypass Unit	*2UBB005212*
ACS580MV Synchronized Bypass unit Engineering Guideline	*2UBB005656*
ACS580MV Manual Bypass unit Hardware Manual	*2UBB005416E01*
ACS580MV Manual Bypass unit Engineering Guideline	*2UBB005683*
ACS580MV Air duct interface Outline Drawing AC Fan Box	*2UBB005072*
ACS580MV Air duct interface Outline Drawing EC Fan Box	*2UBB005074*
ACS580MV Base frame & TEU layout design	*2UBB020751*

Drive firmware manuals and guides	
ACS580MV primary control program firmware manual	*3BHS811381*

Option manuals and guides
Manuals and quick guides for I/O extension modules, fieldbus adapters, etc.

You can find manuals and other product documents in PDF format on the Internet. See *http://www.abb.com/motors&drives*. For manuals not available in the Document library, contact your local ABB representative.

For more information, please refer to ACS580 MV Hardware Manual which can be found by scanning the QR code below.

APP version (IOS/Android)

Web page version

Hardware manual

ACS580 MV drives
200 kW to 6300 kW
3.3 kV to 11 kV

Table of contents

1. Safety instructions

6. Transportation, storage and disposal

7. Mechanical installation

8. Electrical Installation

10. Operation

12. Maintenance

© 2024 ABB Beijing Drive Systems Company Ltd, All Rights Reserved.

2UBB004520 Rev K
EN
EFFECTIVE: 2024-04-16

Table of contents

1. Table of contents

Terms . . . 11
Trademarks . . . 12

2. Safety instructions

Contents of this chapter . . . 13
User's responsibilities . . . 14
General safety information . . . 14
Possible residual risks . . . 15
Safety labels . . . 15
General safety in installation, start-up and maintenance . . . 16
Electrical safety in installation, start-up and maintenance . . . 17
- Precautions before electrical work . . . 17
- Additional instructions and notes . . . 18
- Grounding . . . 18

3. Introduction to the manual

Contents of this chapter . . . 19
Equipment covered by the manual . . . 19
Target groups and required qualifications . . . 20
- Handling . . . 20
- Mechanical installation . . . 20
- Electrical installation . . . 20
- Operation . . . 20
- Maintenance . . . 21

Contents of the manual . . . 21
- Relevant chapters of the manual . . . 21
- Related manuals . . . 21

User's responsibilities . . . 21
Intended equipment use . . . 22
Cyber security disclaimer . . . 22
Categorization by frame size and option code . . . 22

4. Function and hardware description

Contents of this chapter . . . 23
Product overview . . . 23
Rating plate . . . 26
- System overview . . . 27

Power supply configuration . . . 27
- Main power supply to input isolation transformer . . . 27
- Auxiliary power supply . . . 28

Cabinet layouts . . . 28
- Terminal unit . . . 29
- Transformer unit . . . 30

Inverter unit (left-right structure) . . . 30
Inverter unit (Top-Down structure) . . . 32
Power module . . . 32
Control unit . . . 35
Cabinet design . . . 37
Protection class . . . 37
Door locking system . . . 38
Cooling system . . . 39
Function . . . 39

5. Control system and interfaces

Contents of this chapter . . . 41
Main components . . . 41
Control block diagram . . . 42
Control unit (BCU) . . . 43
I/O extension and fieldbus modules . . . 43
Control tasks . . . 44
Control locations and operating modes . . . 44
Local operating elements . . . 44
Local control panel . . . 44
Supply OFF/ON pushbuttons . . . 46
Alarm and fault indications . . . 46
Emergency off . . . 46
Monitoring . . . 46
I/O interfaces . . . 46
Customer control and process I/Os . . . 46
I/O signal requirements . . . 48
Communication interfaces . . . 48

6. Guidelines for planning the electrical installation

References . . . 49
Limitation of liability . . . 49

7. Transportation, storage and disposal

Contents of this chapter . . . 51
Safety . . . 51
Transport conditions . . . 51
Unpacking and inspection . . . 52
Lifting and transportation . . . 52
General notes on transportation . . . 52
Dimensions and weights . . . 52
Using a crane . . . 54
Using a forklift . . . 56
Storage . . . 56
Storage conditions . . . 56
Preparing cabinets for storage . . . 56
Storage and handling instructions for spare parts . . . 57
Disposal of packaging materials and components . . . 58

8. Mechanical installation

Contents of this chapter . . . 59
Safety . . . 59
Examining the installation site . . . 59
Necessary tools . . . 60
Overview on installation work . . . 60
General notes on installation . . . 60
Dimensions, clearances . . . 60
Preparing the foundation . . . 60
Cable ducts . . . 60
Fire protection . . . 61
Cabinet roof . . . 61
Installing fan units . . . 61
Bolting together the units . . . 63
Fixing units to the floor . . . 63
Location of tool kit and accessories . . . 64
Combine cabinet primary cables installation . . . 65

9. Electrical Installation

Contents of this chapter . . . 69
Safety . . . 69
Overview of installation work . . . 69
Cable requirements . . . 70
Parallel routing of power cables . . . 70
Connecting external wiring to the control unit or optional I/O terminal block . . . 70
Terminal sizes for auxiliary and control connections . . . 71
Ground cable and cable shield connections . . . 72
Grounding of the drive system . . . 72
Cables and PE busbar between integrated transformer and drive . . . 74
Cable entries for external connections . . . 76
Power cable entry via holes in cable entry plate . . . 76
Control and auxiliary cable entry with EMC plates . . . 76
Installing power and ground cables . . . 78
Further information . . . 78
Preparing the cable entry and the cables . . . 78
Connecting the cables . . . 80
Installing auxiliary, control and serial communication cables . . . 84
Further information . . . 84
Preparing the cable entry and the cables . . . 84
Preparing the cables . . . 85
Connecting the cables . . . 86
Control and power supply cables for fan units . . . 86
Sealing holes in entry plates . . . 87
Final checks . . . 87

10. Installation checklist

Contents of this chapter . . . 89
Checklist . . . 90

11. Operation

Contents of this chapter . . . 95
Operating conditions . . . 95
Safety . . . 95
Overview . . . 95
Overview on drive status and sequences . . . 96
Status indications . . . 96
Start sequence of the drive . . . 97
Stop sequence of the drive . . . 98
Emergency off sequence . . . 99
Energizing and starting the drive . . . 100
Checks before starting the drive . . . 100
Starting the drive from remote . . . 100
Starting the drive locally . . . 101
Stopping the drive . . . 102

12. Fault tracing

Contents of this chapter . . . 105
Alarm and fault indications . . . 105
Warning and fault messages . . . 106
Diagnosis data and parameter backup . . . 106

13. Maintenance

Contents of this chapter . . . 107
Preparation for maintenance work . . . 108
Documentation and reporting of maintenance work . . . 108
Required tools and equipment . . . 108
Storage and handling of spare parts . . . 108
Software and hardware updates information in MoR . . . 108
Shutting down the drive for maintenance . . . 109
De-energizing the drive . . . 109
Unlocking and locking the doors . . . 110
Connecting a grounding set . . . 111
Grounding power module enclosure and busbar with grounding hook . . . 112
Starting the drive after maintenance . . . 114
Emergency release of the door safety switch . . . 114
Safety-switch settings . . . 115
Visual checks and cleaning . . . 116
Replacing the door air filters . . . 117
Cable connects, bolted connections . . . 118
Spare parts . . . 119
Spare power module reforming . . . 119
Software update in spare parts . . . 119
Auxiliary voltage verification . . . 119
Protective settings . . . 119
Voltage measurement . . . 119
UPS battery refresh charge . . . 120
Testing main power supply circuit . . . 121
Safety circuit . . . 121
Capacitors . . . 121
Reforming capacitor of power modules . . . 122

Replacing roof AC fans* 123
Required tools and equipment 125
Replacing roof EC fans* 125
Procedure 125
Replacing the power modules 129
Required manpower and tools 129
Replacement of a power module frame size R1 - R3 129
Replacing the power module fuse R1 - R3 131
Replacement of a power module frame size R4 - R6 132
Replacing the power module fuse R4 - R6 135
Replacement of a power module frame size R7 - R9 136
Replacing the power module fuse R7 - R9 144
Replacing the control panel battery 144
Circuit board replacements 145
Control unit (BCU) and memory unit (ZMU) 145
Replacing the SD memory card 148
Replacing the real-time clock battery 148
High voltage divider board 148
CVMI2 board 149
Control hub 150
Control hub daughter board 150
Maintenance schedule 151
Drive seasonal operation 151
Shutting down the drive for maintenance 151
Maintain the drive for preservation 151
Maintain the drive before restarting up 152
Start the drive following chapter of “Operation” 152

14. Technical data

Technical data 153

Further information

Product and service inquiries 155
Product training 155
Document library on the Internet 155

Terms and trademarks

Terms

The following table lists the terms and abbreviations you should be familiar with when using the manual. Some of the terms and abbreviations used in the manual are unique to ABB and might differ from the normal usage.

Term / Abbreviation	Meaning
BCU	Control unit used for controlling drives, inverters and converters via fiber optic links.
Converter	Short form for ACS580MV frequency converter.
COU	Control unit Short form for control compartment of the drive.
DDCS	Distributed Drive Control System DDCS is an acronym for a serial communication protocol designed for data transfer via optical fibers.
Drive	Short form for ACS580MV frequency converter.
Drive system	The drive system includes all equipment used to convert electrical into mechanical power to give motion to the machine.
DriveStartup	DriveStartup guides step by step through the complete commissioning including reporting.
Equipment	Frequency converter and related equipment.
EMC	Electromagnetic compatibility All measures to suppress electromagnetic disturbances caused by different electrical equipment in the same electromagnetic environment, and to strengthen the immunity of the equipment to such disturbances.
ESD	Electrostatic discharge
Ground	Earth
To ground	The conducting path (e.g. conductor) between the electric equipment (e.g. frequency converter) and the earth. The electric equipment is connected to the earth, e.g. by a grounding set or a grounding switch.
INU	Inverter Unit The INU converts the DC voltage to the required AC motor voltage and frequency.
IGBT	Insulated Gate Bipolar Transistor
Line voltage	RMS voltage of the main power supply of the drive.
MCB	Main Circuit Breaker The MCB is a major protection device of the drive system and connects / disconnects the main power supply to the drive. The MCB is controlled entirely by the drive.
PCB	Printed Circuit Board

Term / Abbreviation	Meaning
PCC	Point of Common Coupling. The PCC is the point in the electrical power supply system where the responsibility of the utility changes to the industrial customer. The utility is responsible to provide clean voltage and current with respect to harmonic distortion up to the PCC. The industrial customer is responsible not to distort voltage and current by its electrical systems.
PE	Protective Earth
PEBB	Power Electronic Building Block (semiconductor stack). This is another term for power module.
Power module	The power module is a compact assembly of electronic components including power semiconductors and circuit boards that serves as a standardized building block for the INU of the drive.
Safeline	ABB synonym for uninterruptible power supply.
TEU	Terminal Unit Short form for terminal compartment of the drive.
TRU	Transformer unit Short form for transformer compartment of the drive.

Trademarks

Names that are believed to be trademarks of other companies and organizations are designated as such. The absence or presence of such a designation should however not be regarded as an offence of the legal status of any trademark. The following registrations and trademarks are used in this manual:

Term / Abbreviation	Meaning
Windows®	Registered trademark of Microsoft Corporation
Ethernet®	Registered trademark of Xerox Corporation
Profibus®	Registered trademark of Profibus International (P.I.)
Modbus®	Registered trademark of the Modbus IDA organization

1

Safety instructions

Contents of this chapter

This chapter contains the safety instructions which you must obey when you install and operate the drive and do maintenance on the drive. If you ignore the safety instructions, injury, death or damage can occur.

Safety instructions are used to highlight a potential hazard when working on the equipment. Safety instructions must be strictly followed! Non-compliance can jeopardize the safety of personnel, the equipment and the environment. The manual uses these warning symbols:

	DANGER indicates a hazardous situation which, if not avoided, will result in death or serious injury.
	WARNING indicates a hazardous situation which, if not avoided, could result in death or serious injury.
	CAUTION indicates a hazardous situation which, if not avoided, could result in minor or moderate injury.

The safety instructions are derived from the following standards:

- **ISO 3864-2:2004 (E)**

  Graphical symbols – Safety colors and safety signs – Part 2: Design principles for product safety labels

- **ANSI Z535.6**

  American National Standard for Product Safety Information in Product Manuals, Instructions, and Other Collateral Materials

User’s responsibilities

It is the responsibility of those in charge of the drive to ensure that each person involved in the installation, operation or maintenance of the drive has received the appropriate training and has thoroughly read and clearly understood the instructions in this manual and the relevant safety instructions.

General safety information

To maintain safety and minimize hazards observe the following:

- Before the drive is energized, make sure that:
  - all foreign objects are removed from the drive
  - all internal and external covers are securely fastened and all doors are closed, locked and / or bolted
  - the manual release of the door safety switches is in the locked position.
- Before starting to work on the drive, make sure that:
  - the main and auxiliary power supply to the drive is switched off, locked out, and tagged out
  - the drive is dead
  - safety ground connections are in place
  - appropriate personal protective equipment is provided and used when required
  - everyone involved is informed.
- When working near the running drive protective earmuffs should be worn.
- Before work is carried out simultaneously on the drive and on other drive system equipment, make sure that
  - the relevant safety codes and standards are observed
  - all energy sources of the equipment are turned off
  - lock-out and tag-out devices are in place
  - barriers and appropriate covers are used on equipment which is still live
  - everyone involved is informed.
- In case of fire in the drive room:
  - Observe the established rules and regulations for fire protection
  - Only firemen with appropriate protective equipment are allowed to enter the drive room.
- For 13.8kV input voltage, PPE and Safety should be followed “ABB Electrical Safety Matrix” (SA-S-101-07-01) and defined by each country's HSE department.

Possible residual risks

The following risks can arise from a drive system and pose a hazard to people. These risks must therefore be taken into account by the system integrator and / or the plant owner when assessing the risks of the machinery.

- Electric power equipment generates electro-magnetic fields which can cause a hazard to people with metal implants and / or a pacemaker.
- Drive system components can move unintentionally when being commissioned, operated, or serviced due to, for example:
  - Operation of the equipment outside the scope of the specifications
  - Incorrectly assembled or installed equipment
  - Wrongly connected cables
  - External influence on, or damage of the equipment
  - Wrong parameter settings
  - Software errors
  - Faulty hardware.
- Hazardous touch voltages can be present on drive system components caused by, for example:
  - Operation of the equipment outside the scope of the specifications
  - External influence on, or damage of the equipment
  - Induced voltages by external equipment (e.g. induced voltage from a spinning rotor)
  - Condensation on equipment components, or pollution
  - Faulty hardware.
- High temperatures, noise, particles, or gases can be emitted from drive system components caused by, for example:
  - Operation of the equipment outside the scope of the specifications
  - External influence on, or damage of the equipment
  - Wrong parameter settings
  - Software errors
  - Faulty hardware.
- Hazardous substances can be emitted from drive system components due to, for example:
  - Incorrect disposal of components.

Safety labels

Safety labels are attached to the cabinet where necessary to alert personnel of potential hazards when working on the equipment. The instructions on the safety

labels must always be followed, and the labels must be kept in a perfectly legible condition.

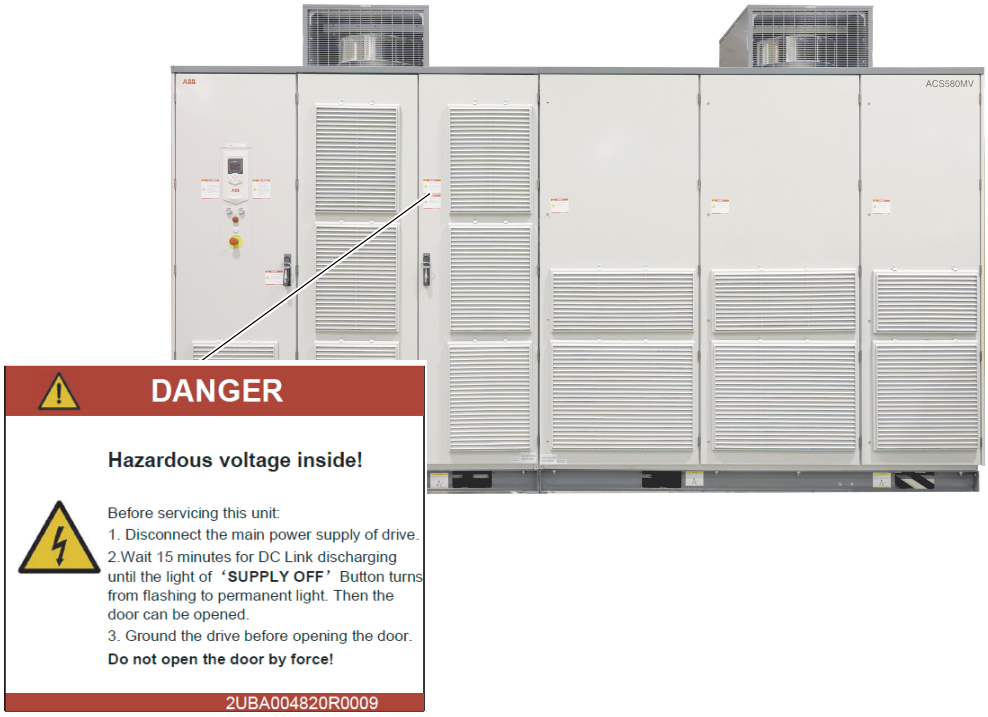

General safety in installation, start-up and maintenance

These instructions are for all personnel that install the drive and do maintenance work on it:

- If you select an external source for the start command and it is on, the drive will start immediately after fault reset unless you configure the drive for pulse start. See the firmware manual.
- When the control location is not set to Local, the stop key on the control panel will not stop the drive.

Electrical safety in installation, start-up and maintenance

Precautions before electrical work

These warnings are for all personnel who do work on the drive, motor cable or motor.

DANGER

High voltage!

Before starting to work on the drive, make sure:

- that the main and auxiliary power supply to the drive is switched off, locked out, and tagged out
- that the drive is dead
- that safety ground connections are in place
- that personal protective equipment is provided and used when required
- that everyone involved is informed.

Before energizing the drive, make sure:

- that all foreign objects are removed from the drive
- that all internal and external covers are securely fastened and all doors are closed, locked and / or bolted
- that the release dials of safety switches are in the locked position.

Obey these instructions. If you ignore them, injury or death, or damage to the equipment can occur. If you are not a qualified electrician, do not do installation or maintenance work. Go through these steps before you begin any installation or maintenance work.

1. Clearly identify the work location.
2. Disconnect all possible voltage sources.
   - Open the main circuit breaker of the drive.
- Wait until internal circuits are discharged completely and doors are unlocked (15 minutes).
   - Open the upstream disconnector to disconnect the supply voltage from the input busbars.
   - Disconnect any external power sources from the control circuits before you do work on the control cables.
3. Protect any other energized parts in the work location against contact.
4. Take special precautions when close to bare conductors (e.g. when the protective plate between COU and TEU is removed).

5. Measure that the installation is de-energized.
   - Use only instrumentation (meters, oscilloscopes, etc.) intended for high voltage measurements.
6. Always discharge equipment and verify that it is neither electrically alive nor thermally hot.
7. Always install temporary grounding as required by the local regulations.
8. Ask for a permit to work from the person in control of the electrical installation work.

Additional instructions and notes

- Do not connect the drive to a voltage higher than what is on the rating plate.
- The motor cable terminals of the drive are at a dangerous voltage when the input power is on, regardless of whether the motor is running or not.
- External wiring can supply dangerous voltages to the terminals of relay outputs.

Grounding

- Always ground the drive, the motor and adjoining equipment according to the maintenance instructions in this manual. Assure that the drive is grounded on both sides, i.e. on supply and motor side. According to IEC 61800-5-1:2016, the protective earthing must not be disconnected, otherwise the touch current may exceed 3.5mA. Proper grounding also reduces electromagnetic emission and interference.
- Make sure that the cross-section of the grounding conductors is sufficient. See the *ACS580MV Engineering Guideline*. Obey the local regulations.

2

Introduction to the manual

Contents of this chapter

This manual documents the operation, maintenance and troubleshooting of the ACS580MV medium voltage drive.

This manual and parts thereof must not be reproduced or copied, or disclosed to third parties, nor used for any unauthorized purpose without written permission from ABB Beijing Drive Systems Company Ltd.

The hardware and software described in this manual is provided under a license and may be used, copied, or disclosed only in accordance with the terms of such license.

Contact information

Address:

ABB Beijing Drive Systems Company Ltd
No.1, Block D, A-10 Jiuxianqiao Beilu
Chaoyang District
Beijing, 100015

Phone	+86 10 5821 7788
Fax	+86 10 5821 7618
E-mail	mvdrives.supportline@cn.abb.com
Web	http:// www.abb.com/motors&drives

Equipment covered by the manual

This manual covers a standard drive and provides generic information on the drive. The manual does not claim to cover all variations and details of the drive, nor to

consider all eventualities that may arise during installation, commissioning, operation and maintenance of the drive.

If the drive is adapted to specific customer needs or applications, and handling, installation, and operation of the drive are affected by these modifications, information on these modifications is provided in the appropriate documentation (e.g. outline drawings, wiring diagrams, technical data, engineering notes).

If information is required beyond the instructions in this manual, refer the matter to ABB.

Target groups and required qualifications

The drive presented in this manual is part of an industrial environment where voltages are present that contain a potential hazard of electric shock and/or burn. For this reason, only personnel who have a thorough knowledge of the drive and the industrial environment and have obtained the required qualification must handle, install, operate, or maintain the drive.

The manual addresses personnel who are responsible for unpacking, transportation, installation, operation and maintenance of the drive. The personnel must carry out the below listed tasks in a manner that does not cause physical harm or danger, and that ensures the safe and reliable functioning of the drive.

Note: Commissioning of the drive must only be performed by qualified and certified ABB personnel.

Handling

The personnel must be skilled and experienced in unpacking and transporting heavy equipment.

Mechanical installation

The personnel must be qualified to prepare the installation site according to the site and equipment requirements and to perform the installation accordingly.

Electrical installation

The personnel must have a sound knowledge of the relevant electrical codes and specifications covering low and medium voltage equipment, be experienced with electrical wiring principles, and know the electrical symbols typically used in wiring diagrams.

Operation

The personnel include all persons who operate the drive from the local operating panel of the drive. The personnel must know the functions of the operating panel, be adequately trained for the drive, and know the driven process. Special knowledge of frequency converter technology is not required.

Maintenance

The personnel include all persons who

- are qualified to carry out preventive and corrective maintenance on drive as described in this manual
- are thoroughly familiar with the drive
- have a sound knowledge of the relevant electrical codes and specifications covering low and medium voltage equipment
- are able to assess the hazards associated with the energy sources of the drive system and act correspondingly
- know the safe shutdown and grounding procedures for the drive system.

Contents of the manual

This manual contains the instructions and information for the basic drive configuration.

Relevant chapters of the manual

No.	Chapter	Handling	Installation	Operation	Maintenance
1	Safety instructions	X	X	X	X
2	Introduction	X	X	X	X
3	Function and hardware description			X	X
4	Control system and interfaces			X	X
5	Guidelines for planning the electrical installation		X		
6	Transportation, storage and disposal	X	X		
7	Mechanical installation		X		
8	Electrical installation		X		
9	Installation checklist		X		
10	Operation			X	X
11	Fault tracing			X	
12	Maintenance				X
13	Technical data		X		X

Related manuals

See *List of related manuals* on the inside of the front cover.

User’s responsibilities

It is the responsibility of those in charge of the drive to ensure that each person involved in the handling, installation, operation or maintenance of the drive has received the appropriate training and has thoroughly read and clearly understood the instructions in this manual and the relevant safety instructions.

Intended equipment use

Those in charge of the drive must ensure that the drive is only used as specified in the contractual documents, operated under the conditions stipulated in the technical specifications and on the rating plate of the drive, and serviced in the intervals as specified by ABB.

Use of the drive outside the scope of the specifications is not permitted.

Intended equipment use also implies that only spare parts recommended and approved by ABB must be used.

Unauthorized modifications and constructional changes of the drive are not permitted.

Cyber security disclaimer

This product is designed to be connected to and to communicate information and data via a network interface. It is Customer's sole responsibility to provide and continuously ensure a secure connection between the product and Customer network or any other network (as the case may be). Customer shall establish and maintain any appropriate measures (such as but not limited to the installation of firewalls, application of authentication measures, encryption of data, installation of anti-virus programs, etc) to protect the product, the network, its system and the interface against any kind of security breaches, unauthorized access, interference, intrusion, leakage and/or theft of data or information. ABB and its affiliates are not liable for damages and/or losses related to such security breaches, any unauthorized access, interference, intrusion, leakage and/or theft of data or information.

Categorization by frame size and option code

Some instructions, technical data and dimension drawings which concern only certain frame sizes are marked with the symbol of the frame size (e.g. 6R6, 10R6). The frame size is not marked on the rating plate. To identify the frame size of your drive, see the Technical Data.

3

Function and hardware description

Contents of this chapter

This chapter provides information on the power equipment and cabinet design and briefly describes the operation principle of the drive.

Product overview

The air-cooled ACS580MV is a general purpose frequency converter for the control of standard induction motors. It is used for a wide variety of applications in different industries with a voltage of 3.3 kV to 11 kV and a motor shaft power range of 200 kW to 6300 kW.

The drive is characterized by

- integrated multi-winding input transformer
- modular power electronics
- 18 / 24 / 30 / 36 / 48 / 54 pulse diode rectifier input
- no additional filter requirement
- multi-level output voltage
- motor cables up to 1000 m as standard
- Grid voltage range: 3.3 kV to 13.8 kV
- Motor voltage range: 3.3 kV to 11 kV

Note: The principle design and layout, and the arrangement of the major power electronics components is the same for all frame sizes of the drive. For this reason, the ACS580MV type 10R6 is used for illustrations.

For information on the power and voltage range of your drive, see the *Technical data* and the *Rating plate* of the drive. For further information on the general drive characteristics, refer to the ACS580MV catalog.

- Typical drive line-up (drive type 10R6)

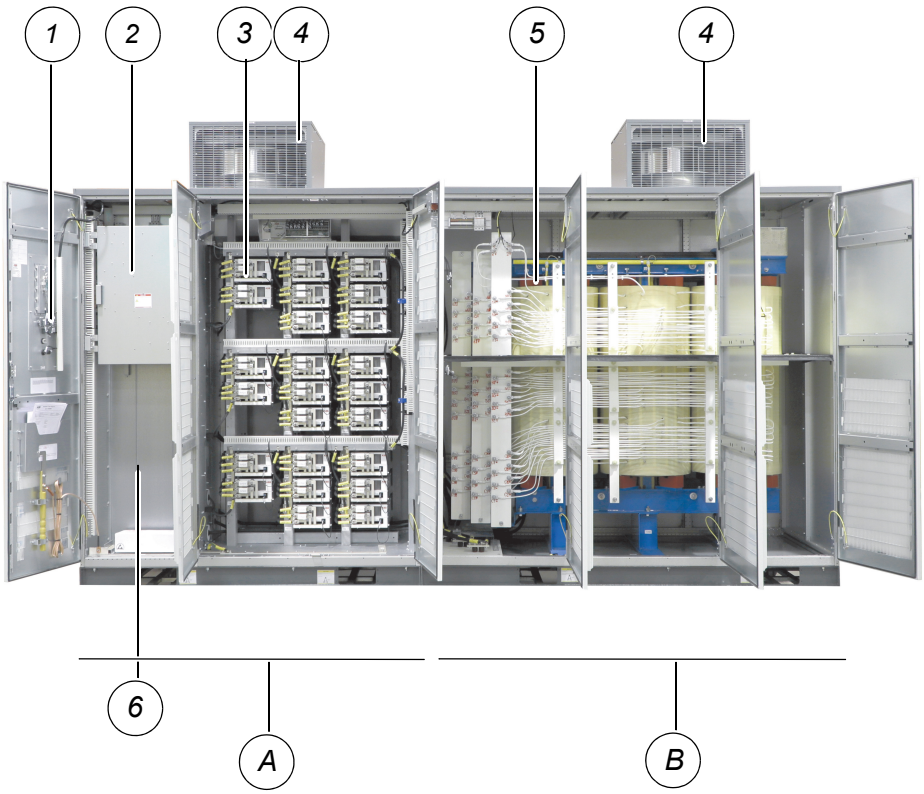

A	Drive unit
B	Transformer unit (TRU)
1	Local control panel (rear side)
2	Control unit (COU)
3	Inverter unit (INU) with power modules
4	Cooling fans
5	Integrated input transformer
6	Terminal unit (TEU) behind protective plate

The dimensions and weight of the cabinet depend on the drive power.

- Typical drive line-up (drive type 4.16 R9)

- Typical drive line-up (drive type 4.16 R6)

For 3.3 kV (Power ≤ 710 kW) and 4.16 kV (Power ≤ 870 kW) only.

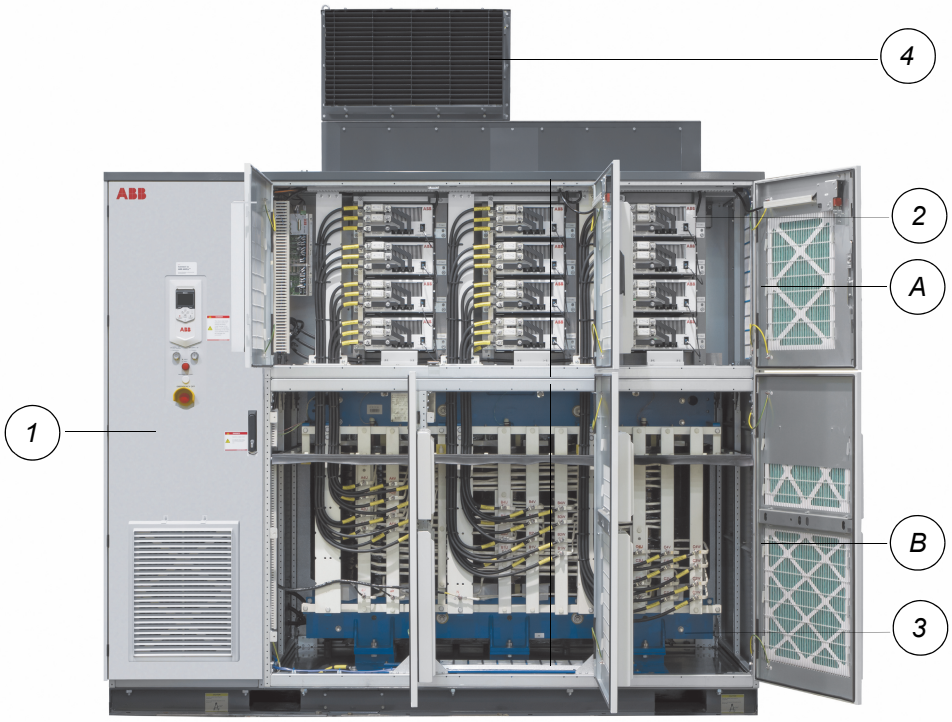

A	Drive unit
B	Transformer unit (TRU)
1	Control unit (COU) and Terminal unit (TEU)
2	Inverter unit (INU) with power modules
3	Integrated input transformer
4	Cooling fans

Rating plate

The rating plate includes an IEC rating, appropriate markings, a type designation and a serial number, which allow identification of each unit. The rating plate is located on the back of the control compartment door (1 in figure below). An example label is shown below.

No.	Description
1	Location of rating plate
2	Type designation, see ACS580MV catalog.
3	Ratings
4	Compliance information
5	Serial number

ABB

Made in China

Type code		ACS580MV-07-0197A-100 (2)
Serial number	(5)	2UBA958000069
Year of manufacture		2016
Degree of protection		IP21
Design standard		IEC 61800, IEC 60146 (4)
Weight	kg	10'100
Number of input phases		1 x 3
Rated input current	A	1 x 180
Rated input voltage	V	10'000
Rated input frequency	Hz	50
Max. permissible short-circuit current	kA	12
Number of output phases		1 x 3
Rated output current	A	1 x 197 (3)
Rated output voltage	V	10'000
Output voltage range	V	0…10'000
Rated output frequency	Hz	51
Output frequency range	Hz	0…76
Duty cycle	A	217 (60 s every 600 s)
Motor type		Asynchronous machine
1-phase auxiliary power consumption	VA	300
3-phase auxiliary power consumption	VA	22'600
Cooling method		AF (air forced)

Rating plate complies with IEC 60146-1-1

Label with MV full typecode for ABB internal use is pasted below the rating plate.

System overview

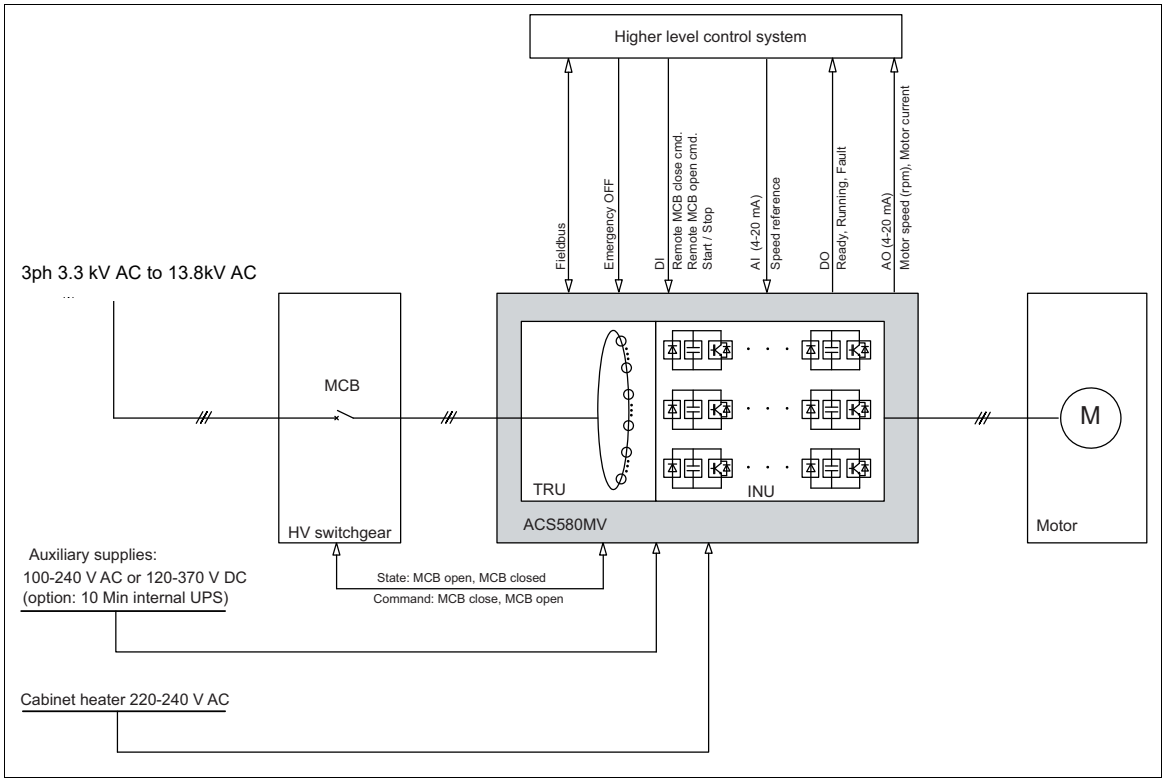

System overview and single line diagram

The ACS580MV drive consists of the following parts:

- integrated input transformer with multiple secondary windings (TRU)
- power modules connected in cascaded h-bridge technology (INU)
- control system based on BCU-02 control unit.

Power supply configuration

The drive requires two independent power supplies:

- Main MV power supply for the power modules via the integrated input transformer
- Auxiliary power supply for the control and cooling equipment.

If the drive is equipped with the optional cabinet heaters, an additional AC supply is required.

Main power supply to input isolation transformer

The main power is fed to the drive by the input isolation transformer which adapts the line voltage to the required voltage for the power modules. The input isolation transformer is always part of the drive system.

The secondary side of the input transformer is a multi-winding configuration that matches the number of individual power modules :

- 3 x 3 modules (3.3 kV)
- 3 x 4 modules (4.16 kV)
- 3 x 5 modules (6/6.3 kV)
- 3 x 6 modules (6.6 kV)
- 3 x 8 modules (10 kV)
- 3 x 9 modules (10.5/11 kV)

Auxiliary power supply

The drive needs auxiliary power for:

- the cooling fans

  The power is always fed by a three-phase power supply.
- the control hardware

  The power is fed by a single-phase power supply.
- the optional cabinet heaters

  The power is fed by a single-phase power supply.

The power feed for the auxiliary supply must be protected with a suitable circuit protection rated for the inrush current. For information on the type dependent auxiliary power consumption figures, see ACS580MV power supply consumption of the drive in the *ACS580MV Engineering Guideline*.

Several auxiliary power supply schemes are available. As a standard, the customer has to provide the following supplies:

Standard configuration

- External 3 phase supply for fan supply (380 - 425 VAC)
- External single phase supply for control supply (100 - 240 VAC or 120 - 370 VDC)
- With optional cabinet heaters: additional external single phase supply (220 - 240 VAC)

Alternatively:

- External 3 phase supply with PE and neutral line (380 - 425 VAC)

  Control auxiliary power is taken from one phase and the neutral line.
- With optional cabinet heaters: additional external single phase supply (220 - 240 VAC)

Alternative configurations

For details on optional alternative supply configurations, see *ACS580MV Engineering Guideline*.

Cabinet layouts

This section describes the main design features and introduces the major power electronics and control components of a typical ACS580MV.

Terminal unit

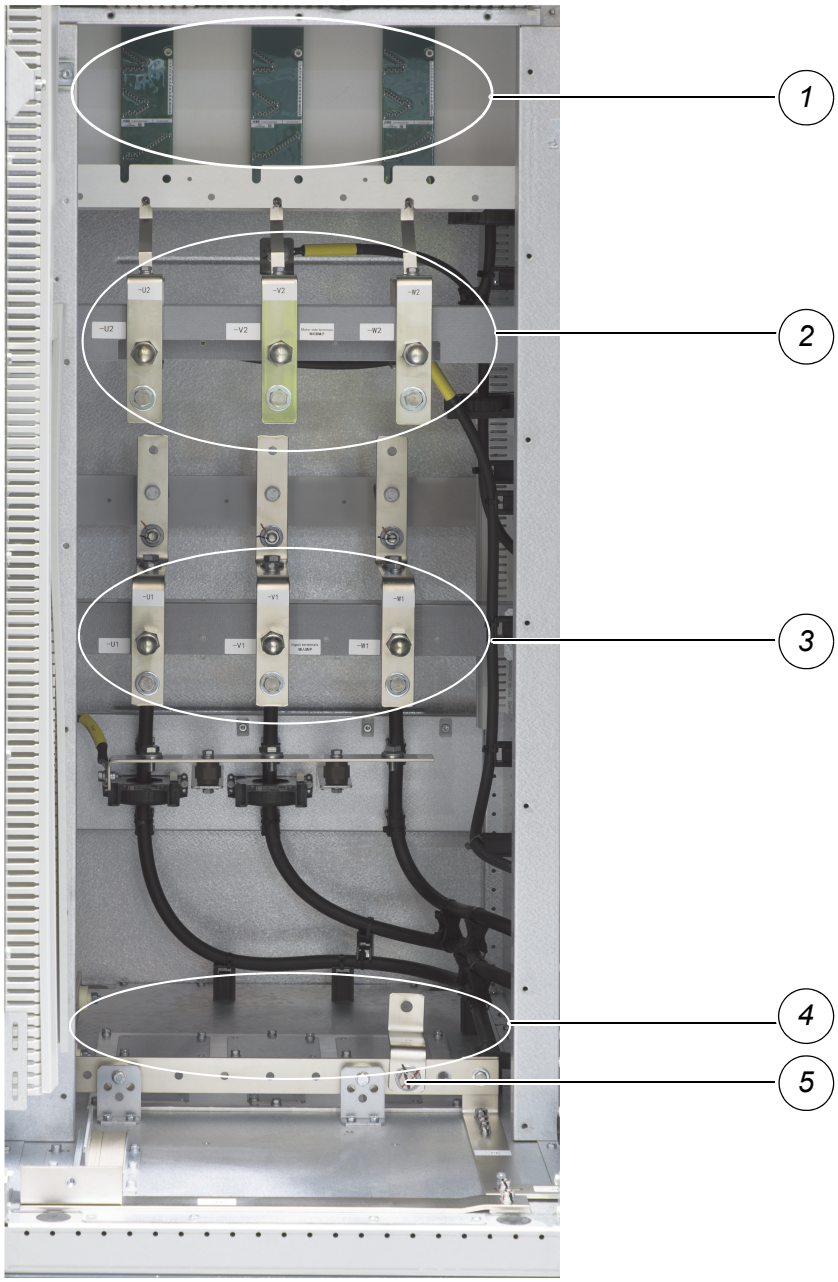

1	Voltage dividers
2	Motor side terminals
3	Input terminals
4	Cable entry plate
5	Cabinet grounding busbar

Terminal compartment with cover plate removed

The terminal unit (TEU) is located behind the control unit (COU). A bolted protection plate separates the two compartments.The plate is integrated into the protection loop to prevent access when the drive is energized.

The compartment provides the terminals for the feeder and motor cables, and the ground bus for the termination of the ground cable and the cable screens.

For further information on the cable entry, see

- *ACS580MV Base frame & TEU layout design*
- Chapter *Electrical Installation*, *Cable entries for external connections*.

Transformer unit

The integrated input transformer is placed on the right side of the drive. It is delivered as a separate unit (TRU) and joint with the converter unit at the final installation location.

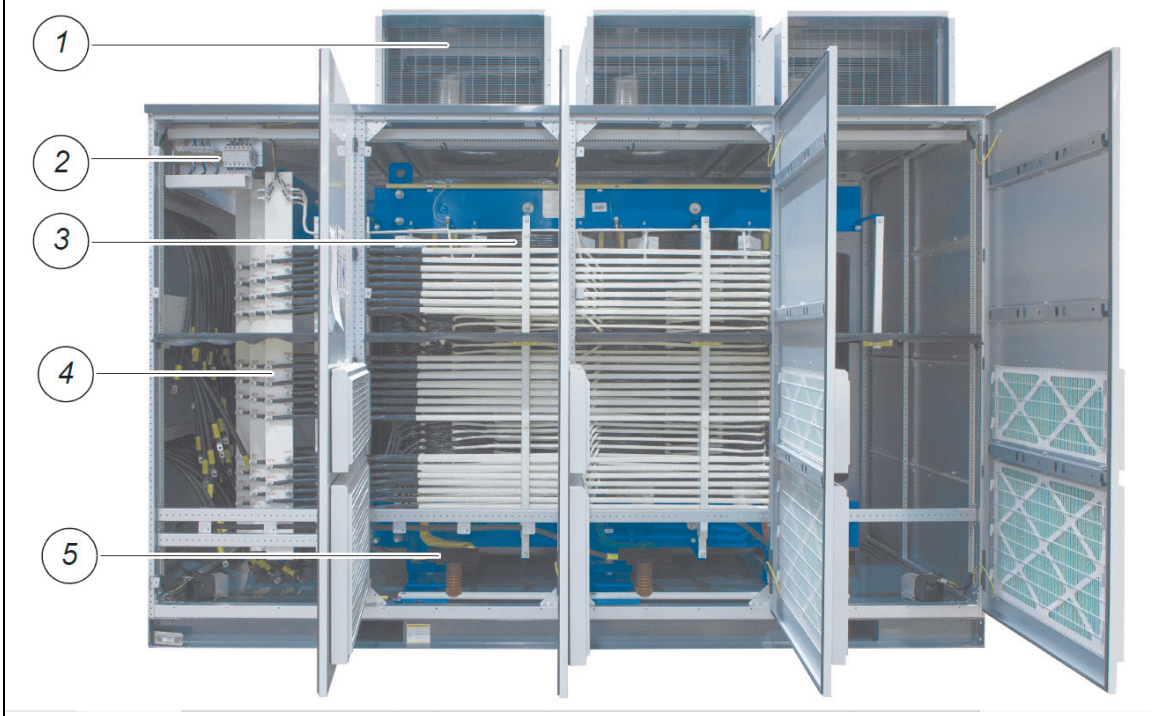

1	Fan units (Fan+Fanbox)
2	Terminal block for monitoring and fan supply
3	Transformer
4	Transformer secondary terminals leading to the power modules
5	Transformer primary side power terminals

Transformer unit (drive type 10R6)

The transformer is air-cooled by means of one or two fan units, depending on the drive size.Optionally, the integrated input transformer is available as a step-up or step-down version.

Inverter unit (left-right structure)

The inverter unit (INU) is part of the drive unit, i.e. it is located between the control unit and the transformer. The INU contains the series connected low voltage power

modules (see section *Power module*) and the associated control equipment (control hub).

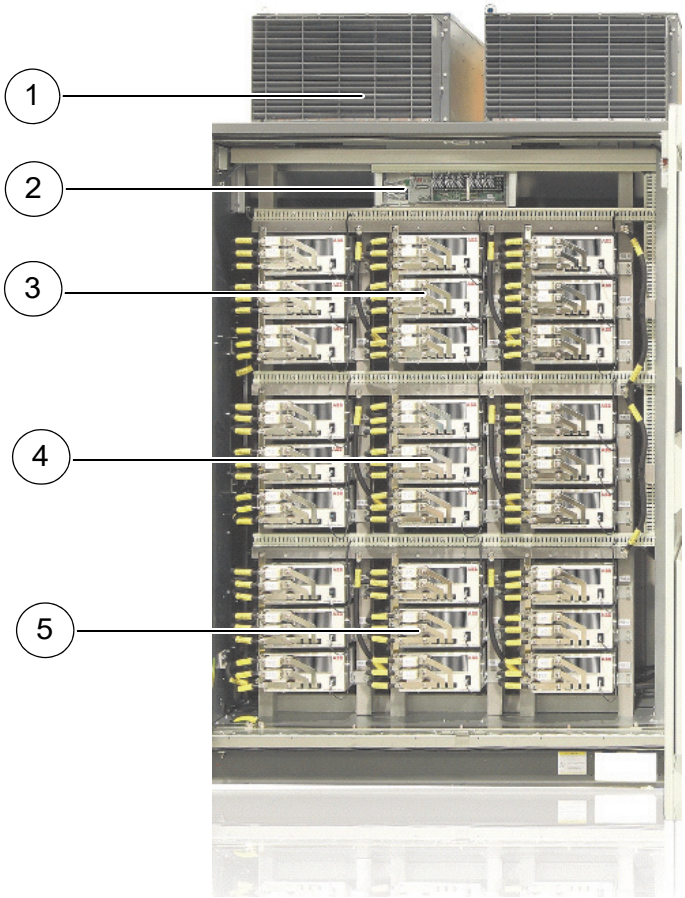

1	Fan unit
2	Control hub
3	Power modules phase A
4	Power modules phase B
5	Power modules phase C

Inverter unit (drive type 11R6)

Inverter unit (Top-Down structure)

For 3.3 kV (Power ≤ 710 kW) and 4.16 kV (Power ≤ 870 kW), the Inverter unit and Transformer unit are combined as one unit. The INU is located on the top and TRU is on the bottom.

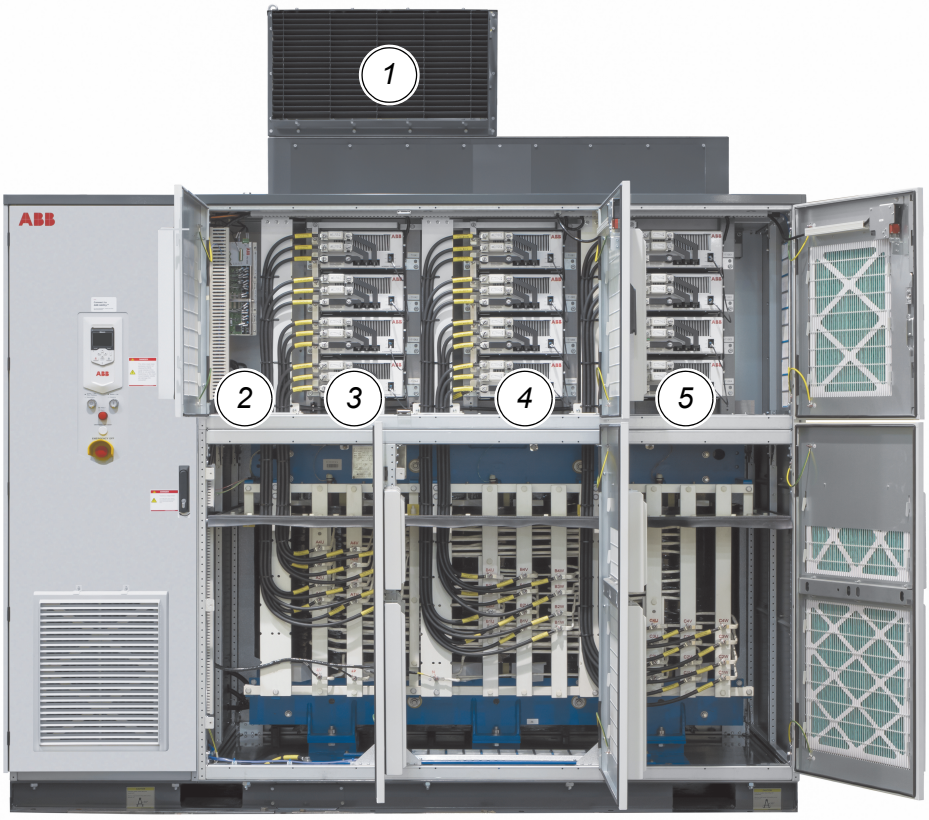

1	Fan unit (Fan+Fanbox)
2	Control hub
3	Power modules phase A
4	Power modules phase B
5	Power modules phase C

Inverter unit (drive type 4.16 R6)

Power module

Three types of power modules are used:

- Power module 0 (frame sizes R1, R2, R3)
- Power module 1 (frame sizes R4, R5, R6)
- Power module 2 (frame sizes R7, R8, R9)

The power modules are mounted on guide rails and bolted to the frame for easy replacement.

For information on the dimensions and the weight, see *Technical data*.

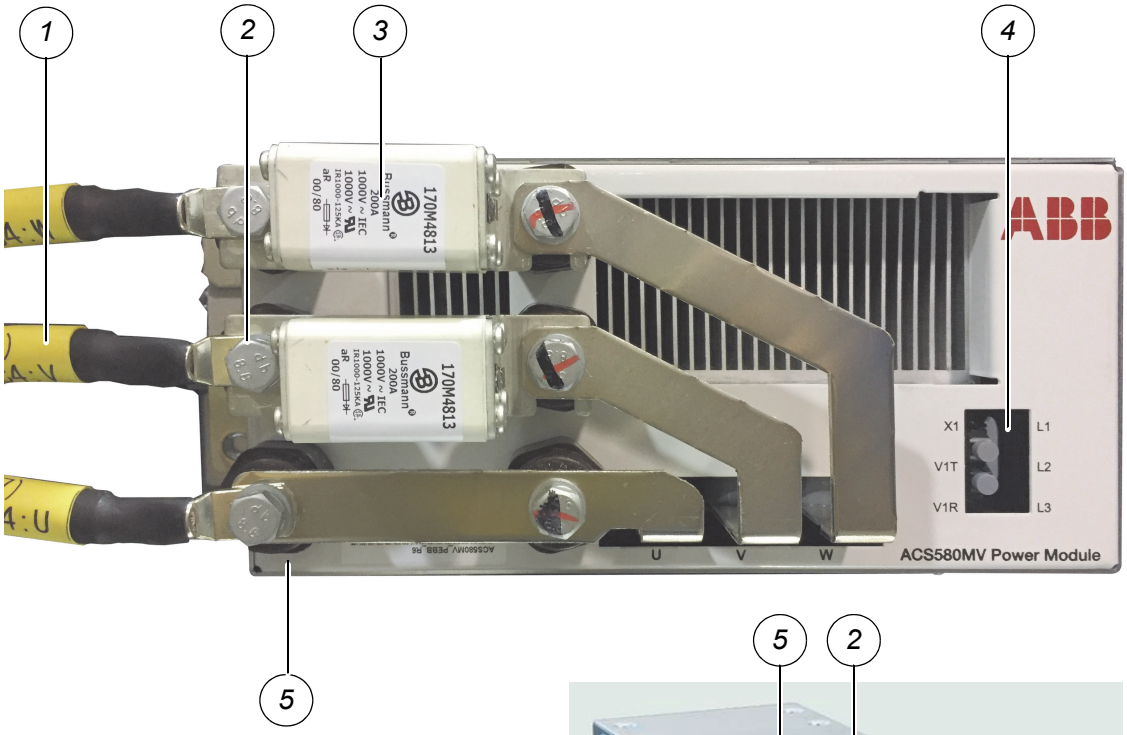

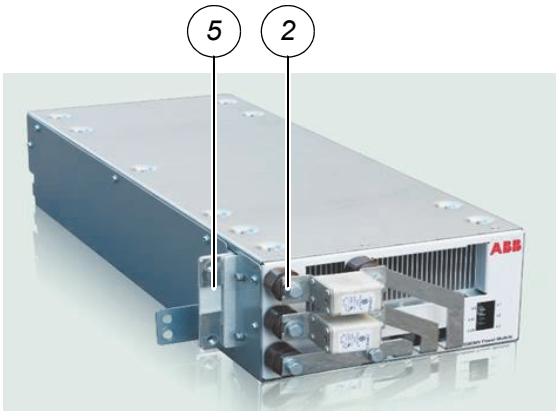

1	Input cables (3 phases)
2	Power cable terminals
3	Input fuses
4	Fiber optic terminal
5	Output busbar (behind cable terminals)

Power module 0/1(frame size R1 - R6)

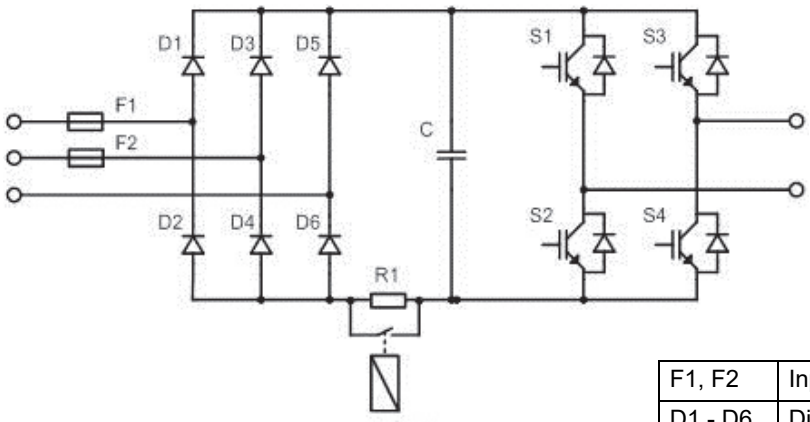

F1, F2	Input fuses
D1 - D6	Diode rectifier bridge
C	DC circuit capacitor
S1 - S4	Inverter IGBTs
R1	Charging resistor

Power module circuit diagram

Each power module integrates in one single housing a

- 6 pulse diode rectifier bridge
- DC circuit
- inverter IGBTs
- gate driver electronics.

The active 3-phase unit is designed as a self-commutated, multi-level voltage source inverter. As a result of the multi-level topology, the drive produces an optimum number of switching levels - e.g. 21 level for 6 kV, 33 level for 10 kV, phase to phase.

The resulting waveforms permit the use of standard motors.

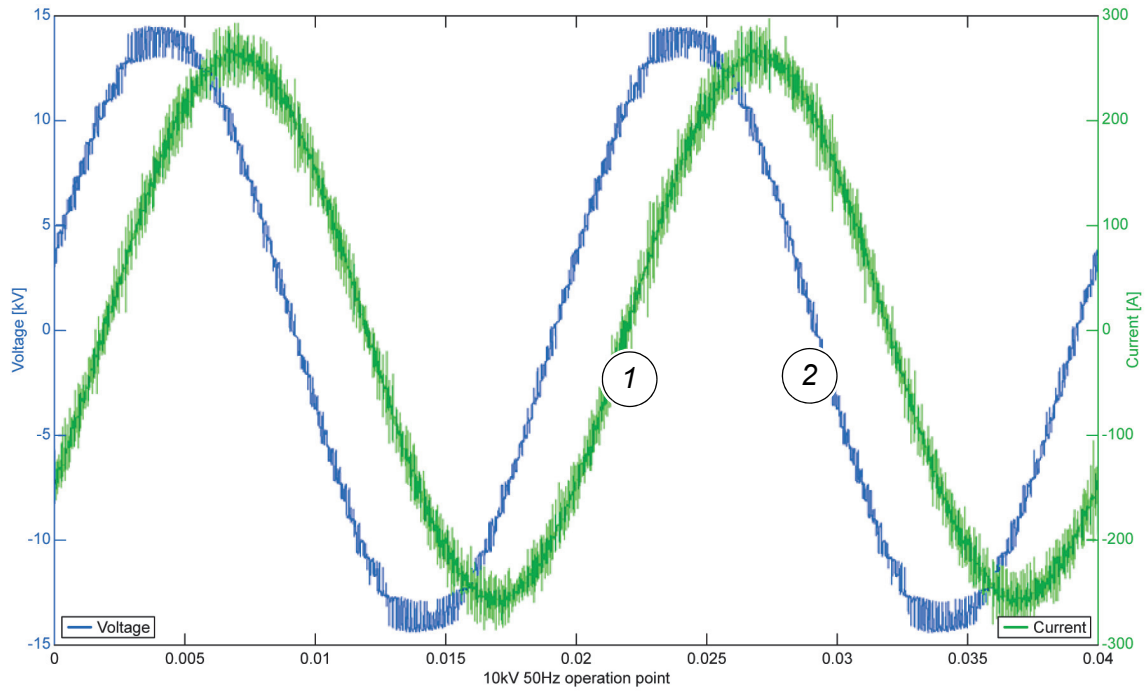

1	Output current
2	Output voltage

Output current and voltage waveforms for 10 kV, 50 Hz

Charging circuit

The DC link capacitor is charged via the charging resistor R1 when the MCB is closed and the drive is connected to the main power supply. Thus, excessive inrush currents are prevented.

The charging sequence is started by pressing the **SUPPLY ON** pushbutton on the control compartment door. After the charging sequence has finished, the charging resistor is bypassed and the DC link will reach its nominal level. The drive then is in status **Stopped**.

When the DC link has been charged, it is possible to keep the drive in this state to facilitate a more rapid start-up procedure.

Discharging the power modules

Discharging is initiated by pressing the **SUPPLY OFF** pushbutton on the control compartment door. The energy stored in the DC link is dissipated in the resistors of the power part of the drive. For safety reasons, the cabinet doors are locked for 15 minutes during the DC link capacitors discharge. After the DC link capacitors have discharged completely the cabinet doors of the power compartments unlock and the **SUPPLY OFF** pushbutton changes to a permanent light. The power modules can the be grounded with the supplied grounding hook (for details see *Shutting down the drive for maintenance*).

Control unit

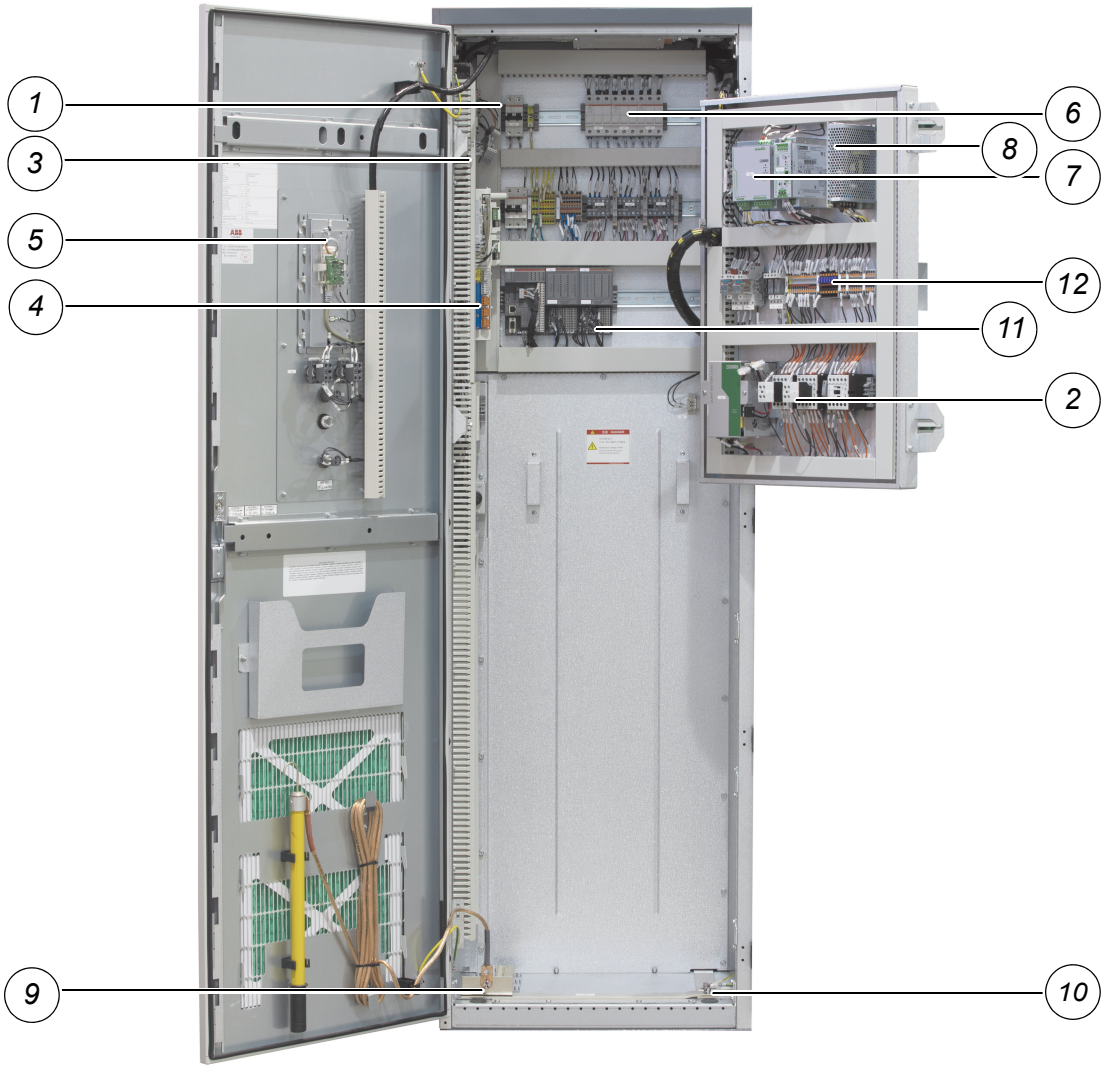

1	Control supply, mini circuit breakers
2	MCB control relays
3	Customer terminal blocks and cable duct
4	Control unit (BCU)
5	Local control equipment (backside)
6	Fan supply, breakers

7	24 VDC power supply for control
8	-24 VDC converter for control
9	EMC cushions for cable bottom entry
10	PE busbar
11	I/O controller
12	Terminal blocks & fuses

Control compartment with open swing frame

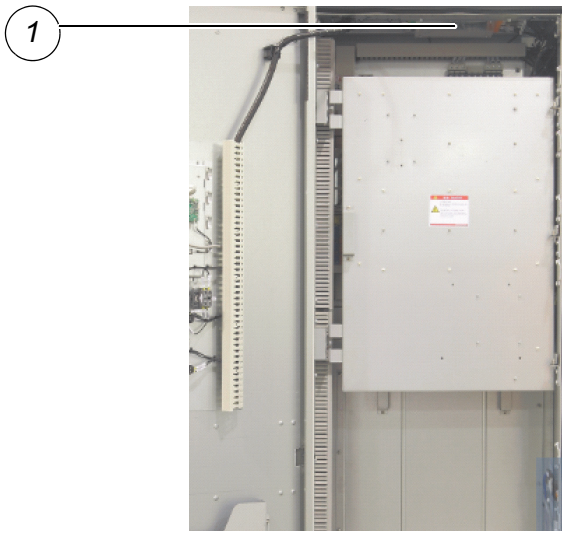

1	CVMI2 board

Control compartment with swing frame closed

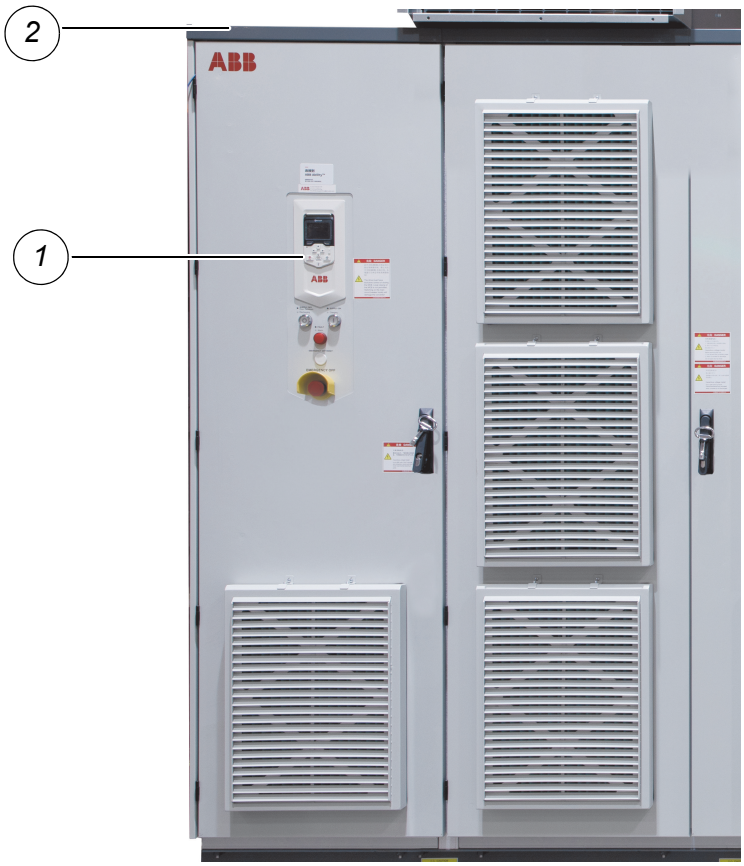

1	Local control panel and pushbuttons
2	Sealing grommets for cable top entry

Control compartment with front door closed

Cabinet design

The cabinet has been designed using the MNS cabinet system of ABB. The design consists of a skeletal frame to which the outer panels are bolted to. Corrosion resistant materials are used to protect the cabinet from corrosion.

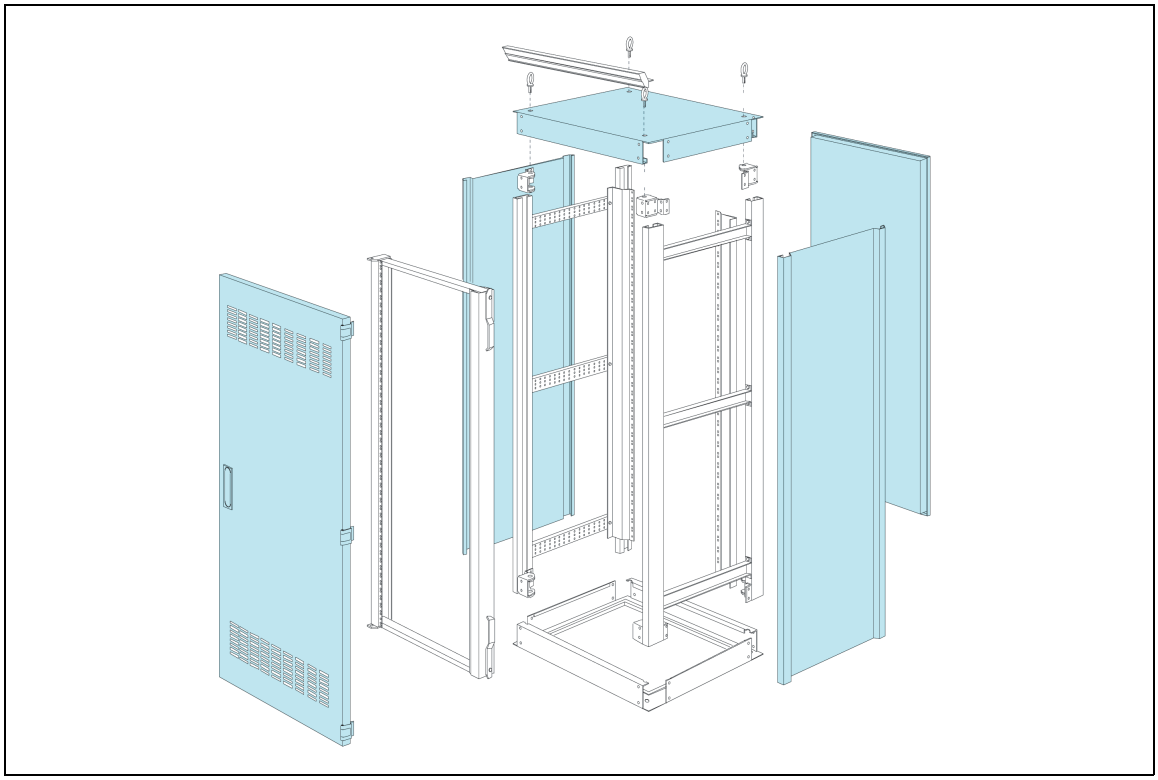

The basic elements of the frame are C-shaped steel profiles with screw holes at a regular distance of 25 mm. The profiles are anti-corrosion-coated. The outer panels are bolted to the C-shaped profiles with self-tapping screws. The panels are also protected by hot-dip zinc-coating.

The outside of the doors and the side panels are painted to enhance the appearance of the cabinet. The standard color is RAL 7035 and RAL7032.

The cabinet's inside panels are not painted, because paint tends to reduce the effectiveness of metallic bonding which is important for successful EMC.

Protection class

Standard protection class is IP21. IP42 is available as option.

Door locking system

All doors and removable cover plates of the drive and the transformer units are either lockable or bolted. Additionally, the door of the INU is secured with a safety switch. The safety switch is tied into an interlocking circuit that prevents the door from being opened as long as the DC link of the drive is charged.

The door of the control compartment (1) is not integrated into the interlocking circuit and can always be opened. However, the removable cover plates leading to the terminal compartment are equipped with safety contacts that are tied into the interlocking circuit. An Emergency off is initiated if one of these contacts is opened.

1	Door of control compartment: lockable
2	Cover plates to TEU with safety contact: bolted. The main power cannot be switched on when the plate is removed.
3	Doors of INU compartment: electromechanically locked
4	Doors of transformer unit: bolted

Door locks

Cooling system

The drive unit and the transformer unit are each equipped with one or several fan units, depending on the drive type. Optionally, the drive and the integrated transformer can each be equipped with a redundant fan configuration. This configuration ensures that the operation of the drive system is not interrupted if a fan fails.

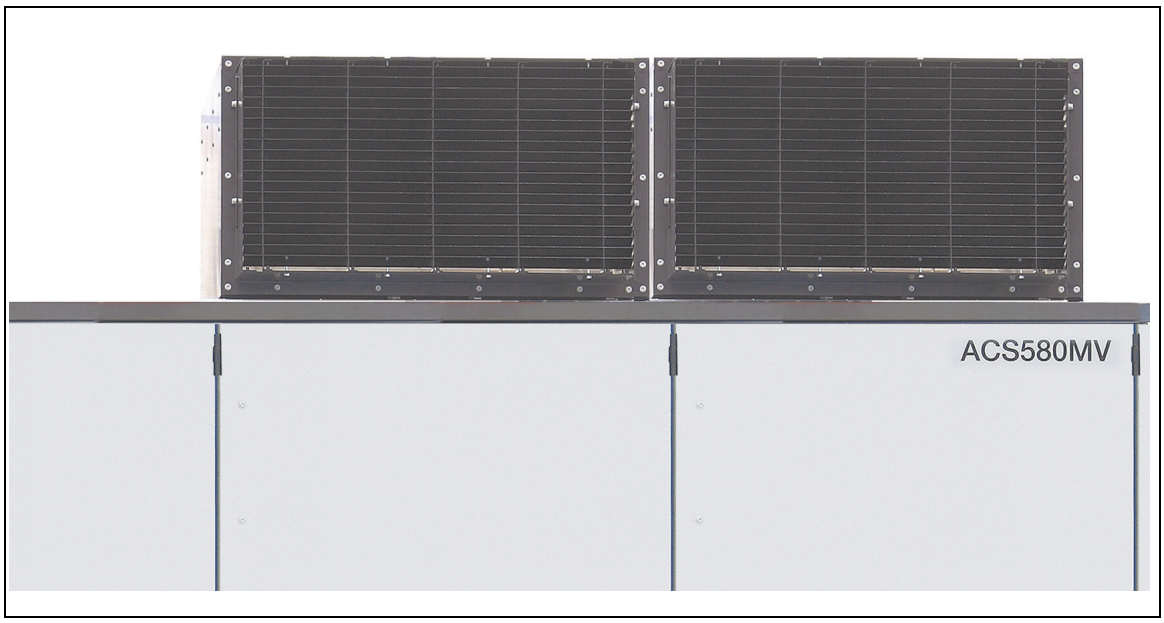

Fan units on top of transformer unit

Function

Fan groups

For control reasons, the fan unit(s) of the drive and the integrated transformer combined together are defined as Fan groups.

- Fan group 1: 1 Fan unit of drive and 1 Fan unit of integrated transformer.
- Fan group 2, Fan group 3, Fan group 4: Fan group number is defined as maximum number of Fan units of drive or integrated transformer.

The fan units of a Fan group are always switched on and off together.

Note: For 3.3 kV (Power ≤ 710 kW) and 4.16 kV (Power ≤ 870 kW), Fan group 1 is defined only 1 Fan unit for the drive and integrated transformer.

Starting, stopping

The standard fan unit or fan group 1 is switched on by the control system of the drive when the charging of the DC link is initiated. When the MCB has opened, the fan units continue to run for a preset time.

Air flow inside the drive

Drive unit: the fan unit feeds the cooling air to the main power electronic components and transfers the heat to the outside of the cabinet.

Transformer unit: the fan unit feeds the cooling air to the transformer and transfers the heat to the outside of the cabinet.

The air enters the drive cabinet through the louvered panels at the front, passes the power modules in the INU compartment, or the transformer in the TRU. The air then exits through the outlet of the fan unit on the cabinet top.

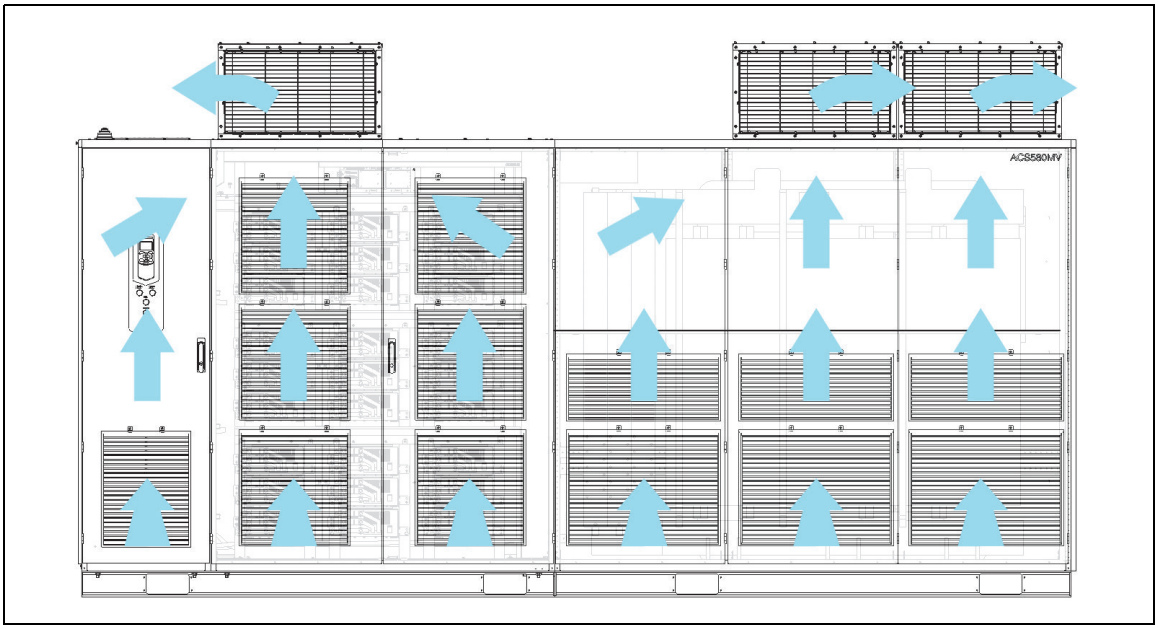

Air flow through the drive (10R6)

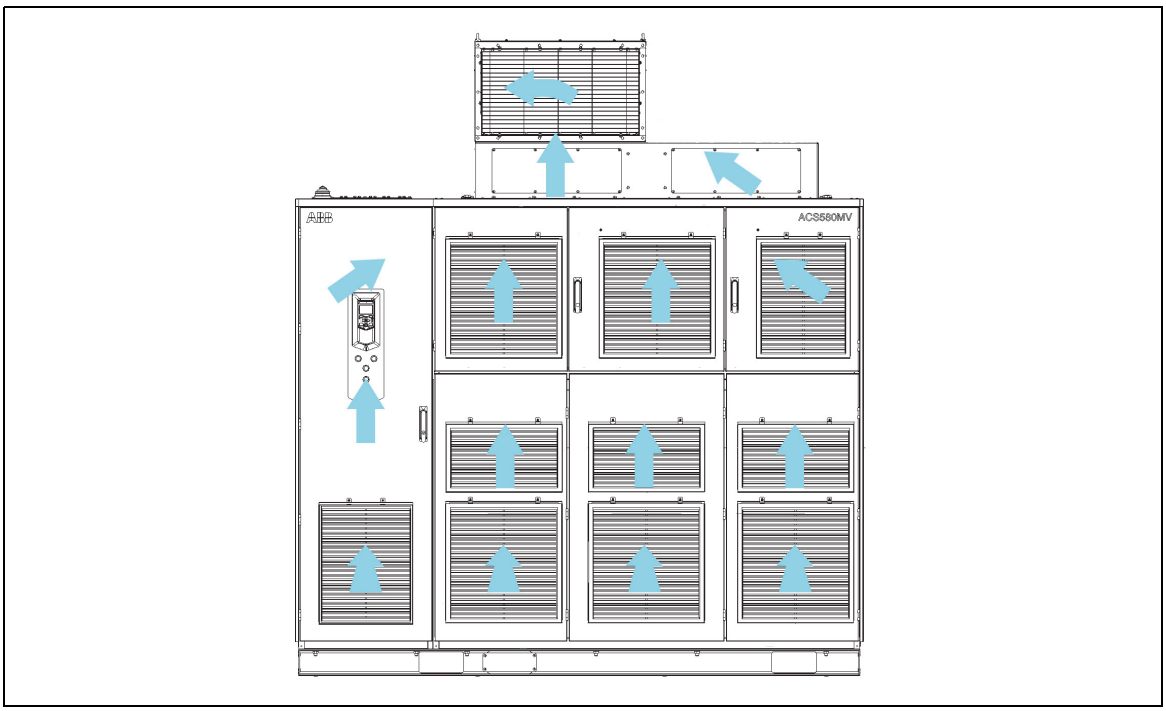

Air flow through the drive (4.16 R6)

When a fan of the drive or a fan of the integrated transformer fails, the control system of the drive switches on the stand-by fan automatically in case of redundant fans. The failure of a fan is indicated on the control panel of the drive.

Temperature monitoring

The power modules, the INU compartment and the transformer are monitored for overtemperature.

4

Control system and interfaces

Contents of this chapter

This chapter contains an overview of the control system, the default I/O connection diagram, descriptions of the terminals and contains references to related manuals and documentation.

Main components

The control compartment incorporates the hardware for the control, monitoring and protection functions of the drive, and the communication interfaces to the local control panel and to the remote control devices. Depending on the control concept of the drive system, the remote control devices include a higher-level control system and / or remote operator stations.

Control block diagram

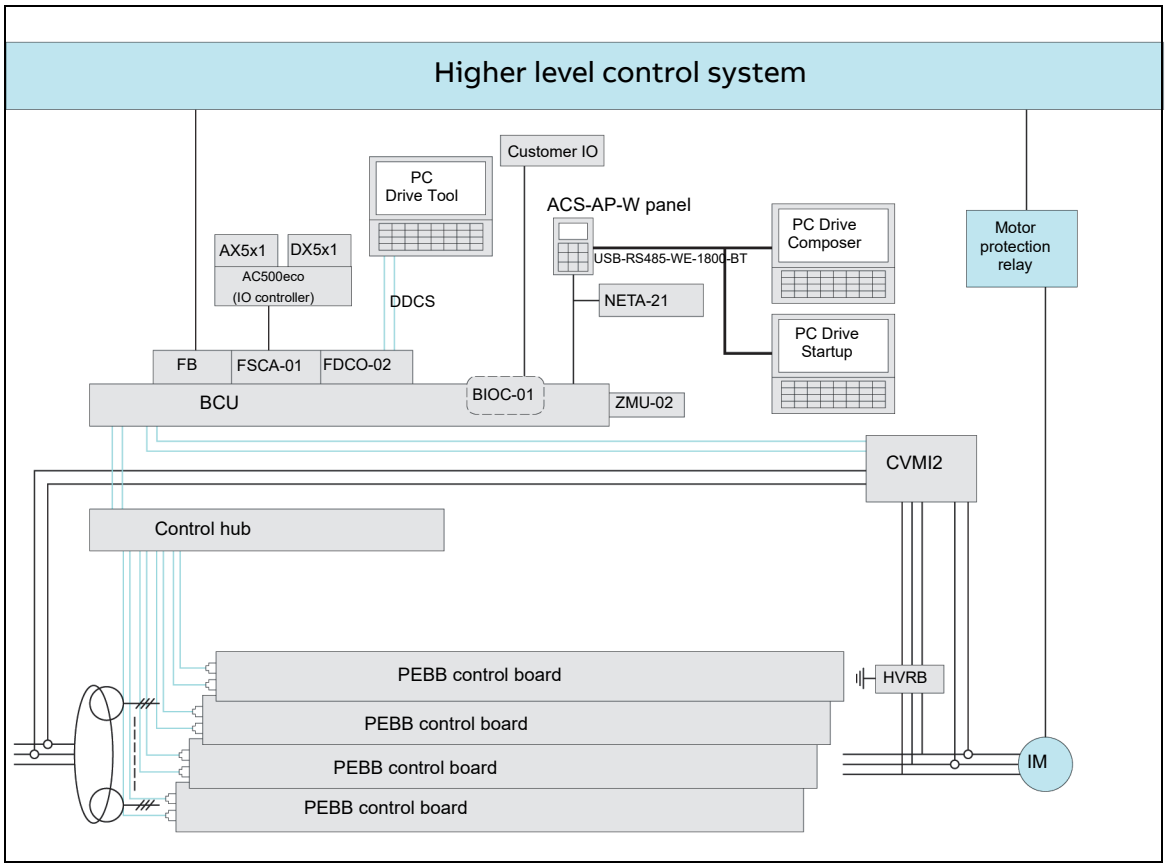

Control system block diagram

The BCU is the major component of the drive control system and performs general drive, motor control functions.

The main internal control devices and the peripheral input and output interfaces to the customer communicate with the BCU via optical fibers and hardwired I/Os.

The control hub provides the interfaces between the inverter unit and the control compartment. This includes the inverter control as well as the monitoring signals from the inverter cabinet.

DDCS communication channels are used for high speed data transfer via the control hub to the PEBB control boards inside the power modules.

Internal and external, analog and binary I/O signals are connected to the BCU via an AC500 I/O controller. The I/O controller and the BCU communicate via a fieldbus link.

Analog measurement signals (i.e. supply and motor voltages and currents) are transmitted to the BCU via the CVMI2 board.

For the physical locations of the control components see chapter *Function and hardware description*.

Control unit (BCU)

The BCU is a control unit used for controlling drives, inverters and converters via fiber optic links. The BCU contains integrated branching unit functionality for collecting and storing real-time data from the converter modules to help fault tracing and analysis. The data is stored in a SD card (data logger memory).

1	Battery slot
2	Memory unit
3	7-segment display
4	Ethernet ports for control panel & service PC
5	Indication LEDs • Real time clock battery ok (BATT OK) • Internal voltage ok (PWR OK) • Program fault (FAULT) • Writing to SD card (WRITE)
6	SD card slot
7	Fiber optic connections
8	3 slots for optional extension and communication modules
9	Hardwired I/Os
10	Labels for hardwired I/Os

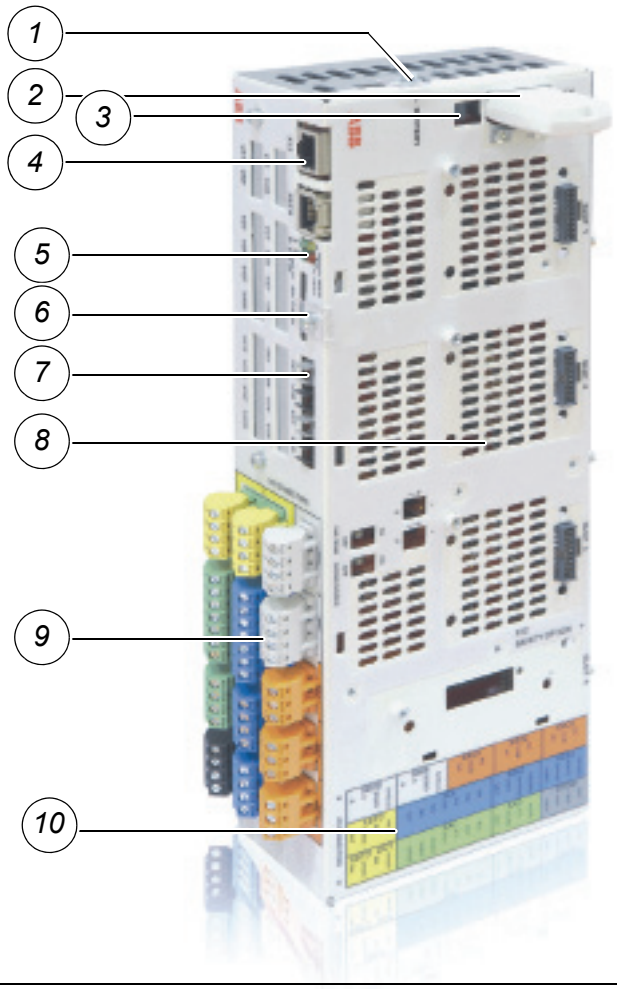

BCU control unit

The BCU has an integrated Ethernet port for PC tool communication and a removable memory unit. When, for example, a converter is replaced, the parameter settings can be retained by transferring the memory unit from the defective converter to the new one.

I/O extension and fieldbus modules

The BCU has three option slots for I/O extensions and fieldbus adapters. Two are available for customer use, allowing the use of following fieldbus protocols: Profibus, Modbus RTU, Modbus TCP, EtherNet/IP, Profinet, and/or analog and digital I/O extension adapters.

The actual configuration of the I/O extensions and fieldbus adapters can be derived from the option codes in the ordering code of the drive (for identification refer to the ACS580MV catalog). Typical configuration includes one I/O extension adapter plus one fieldbus module, OR, two I/O extension adapters.

For the related manuals refer to the project documentation, containing the relevant Manuals and quick guides for I/O extension modules, fieldbus adapters, etc.

Control tasks

The BCU has specific control and closed-loop tasks assigned to it. It processes drive and status information, performs the speed and torque control tasks, and monitors the operation of the drive.

All relevant drive variables (e.g. speed, torque, current, voltage) are continuously monitored by the control system. Pre-programmed protection functions ensure that these variables remain within certain limits in order to maintain safe operation of the drive. These internal functions are not programmable by the user.

Optionally, the drive can monitor signals from external equipment. These can be activated and adjusted with parameters.

Other general control, protection and monitoring tasks regarding the whole drive include control and monitoring of:

- Main circuit breaker

  The main circuit breaker (MCB) is an important switching and protection device of the drive system. Therefore it must only be controlled by the drive.

- Door locking system
- Cooling fans

Control locations and operating modes

The ACS580MV has two main control locations: external and local. The control location is selected with the **Loc/Rem** key on the control panel or in the PC tool.

Refer to *ACS580MV primary control program firmware manual*.

Local operating elements

The local operating elements are located on the front door of the control compartment.

Local control panel

The control panel serves as the basic user interface for operating and monitoring the drive when the local operating mode has been selected.

The control panel can be attached to or detached from the drive without having to switch off the auxiliary power supply first.

Using the control panel, it is possible

- to enter start-up data
- to control the drive with a reference value, and start, stop and direction commands
- to display actual values (3 values can be read simultaneously)
- to display and adjust parameters
- to display information on the most recent fault events
- to display history graphs
- to upload and download complete parameter sets.

The control panel has a status LED that indicates if there are any faults or warnings present. The table below shows the meaning of the LED indications.

LED status	Meaning
Green, continuous	Normal operation
Green, flickering	Data is transferred between the PC tool and drive through the USB connection of the control panel.
Green, flashing	Alarm pending
Red	Drive in fault state.

For details on use and maintenance of the control panel refer to *ACS-AP-X assistant control panels user's manual*.

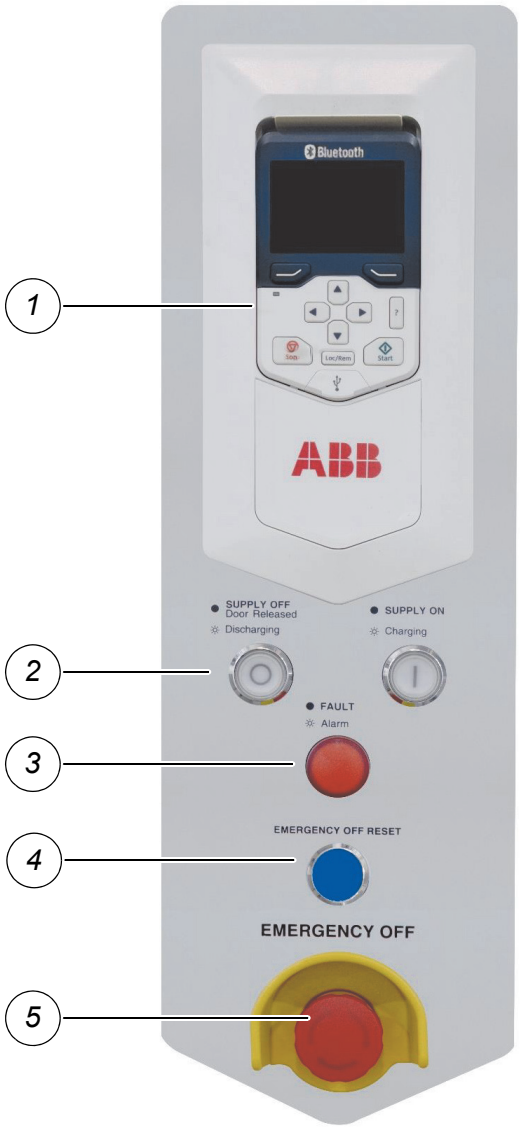

1	Control panel
2	Supply OFF/ON pushbuttons and indication lamps
3	Alarm (flashing) / Fault (on) indication light
4	Emergency Reset button (optional for SIL3)
5	Emergency off button

Local operating elements

Supply OFF/ON pushbuttons

The **SUPPLY OFF** pushbutton is used to disconnect the drive from the main power supply. It is illuminated when the MCB is open and the drive is discharged.

The **SUPPLY ON** pushbutton is used to connect the drive to the main power supply. It is illuminated when the MCB is closed.

Alarm and fault indications

When a failure occurs in the drive or in the equipment monitored by the drive, the control panel displays a corresponding alarm or fault message and the red Fault / Alarm button on the control compartment door lights up:

Button / Light	Color	Status	Meaning
Fault/Alarm	Red	Off	Normal operation
		Flashing	Alarm pending
		On	Drive in fault state.

Emergency off

The Emergency off button initiates an immediate stop of the drive.

In the event of an Emergency off, the following happens immediately:

- the pulses of the inverter are blocked
- the MCB is tripped.
- the DC link is discharged.

All auxiliary circuits remain live.

Monitoring

Basic system monitoring is done with the local control panel. For more detailed diagnosis and signal monitoring the Drive Composer – PC tool is available.

I/O interfaces

Customer control and process I/Os

This chapter provides an overview of the hardwired I/Os. For details refer to *ACS580MV Engineering Guideline* and *ACS580MV Catalog*.

Please note that this I/O interface only available in standard option, if Synchronized Bypass or manual bypass selected, please see I/O interface in separated *Synchronized Bypass hardware manual* or *Manual bypass hardware manual*.

Central Controler

Default control connections for the factory macro

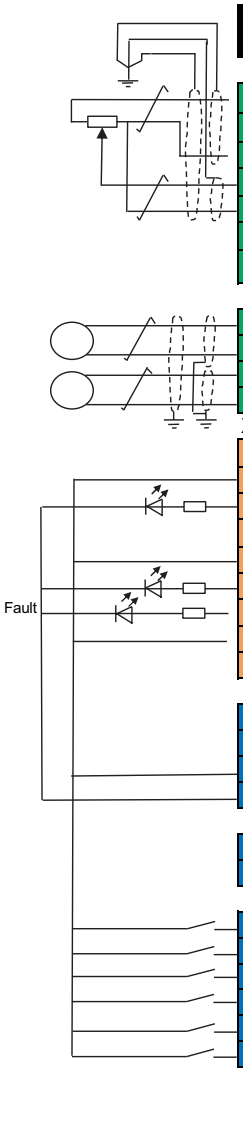

XPOW	External power input	
1	+24VI	24 VDC, 2 A (internally used)
2	GND	
XAI	Reference voltage and analog inputs	
1	+VREF	10 VDC, R_L 1…10 kohm
2	-VREF	-10 VDC, R_L 1…10 kohm
3	AGND	Ground
4	AI1+	**Speed reference**
5	AI1-	0(2)…10 V, R_{in}>200 kohm
6	AI2+	By default not in use.
7	AI2-	0(4)…20 mA, R_{in}>100 ohm
XAO	Analog outputs	
1	AO1	**Motor speed rpm**
2	AGND	0…20 mA, R_L<500 ohm
3	AO2	**Motor current**
4	AGND	0…20 mA, RL<500 ohm
XRO1, XRO2, XRO3 Relay outputs		
11	NC	**Ready**
12	COM	250 VAC/30 VDC
13	NO	2 A
21	NC	**Running**
22	COM	250 VAC/30 VDC
23	NO	2 A
31	NC	**Fault (-1)**
32	COM	250 VAC/30 VDC
33	NO	2 A
XD24	Digital interlock	
5	+24 VD	+24 V DC 200 mA
6	DICOM	Digital input ground
7	+24 VD	+24 V DC 200 mA
8	DIOGND	Digital input/output ground
XDIO	Digital input/outputs	
1	DIO1	MCB trip command (internally used)
2	DIO2	MCB status closed (internally used)
XDI	Digital inputs	
1	DI1	Stop (0) / Start (1)
2	DI2	Forward (0) / Reverse (1)
3	DI3	Reset
4	DI4	Acc/Dec time set 1 (0) / set 2 (1)
5	DI5	Constant speed 1 (1 = On)
6	DI6	By default, not in use
X13	Control panel connection (internally used)	
X205	Memory unit connection (internally used)	
XETH	PC ethernet connection for Drive Composer	

Default control connections for the factory macro

Customer Interface Terminal Block

X1 Customer Interface Terminal Block

1	MB close cmd	floating contacts to customer making capability: 40 A thermal current: Ith = 6 A @40°C breaking capability: AC-15 50 Hz Ie(240 V)=4 A, Ie(500 V)=2 A DC-13 Ie(24 V)=2.5 A, Ie(110 V)=0.7 A, Ie(240 V)=0.4 A minimum load: 17 V, 5 mA isolation rated voltage 690 VAC
3		
5	MB trip/unlock cmd	
7		
9	MB open cmd 1	
11		
13	MB open cmd 2 (if MO2)	
15		
17	MB open status	Connect contact from customer internal supply 24 VDC, 20 mA, max resistance 140 Ω
19		
21	MB closed status	Connect contact from customer internal supply 24 VDC, 5mA
23		
25	MB ready status	
27		
29	Emergency off 1	Connect contacts from customer Max resistance 60 Ω. Internal supply, 24 VDC, 25 mA
31		
33	Emergency off 2	
35		
37	Remote MB close cmd	Connect contacts from customer internal supply 24 VDC, 5 mA Switchable
39		
41	Remote MB open cmd	
43		
45	Process stop/ Remote disable local mode	
47		
49	Alarm	RO, NC/NO can be selective, 250 VAC/30 VDC, 2 A
51		
53	24Vdc	24 VDC for digit input
54		
55		
56		
57		
58		
59		

Customer interface terminal block

I/O signal requirements

See the *Technical data.*

Communication interfaces

See the *ACS580MV primary control program firmware manual* and the *Technical data*.

5

Guidelines for planning the electrical installation

References

For instructions for planning the electrical installation of the drive and for the technical requirements for the protection and control of the medium voltage supply see the *ACS580MV Engineering Guideline*.

For selecting a specific drive type and options refer to *ACS580MV Engineering Guideline*.

Limitation of liability

The installation must always be designed and made according to applicable local laws and regulations. ABB does not assume any liability whatsoever for any installation which breaches the local laws and/or other regulations. Furthermore, if the recommendations given by ABB are not followed, the drive may experience problems that the warranty does not cover.

6

Transportation, storage and disposal

Contents of this chapter

This chapter provides information and instructions for transportation, storage and disposal of the drive.

Safety

The drive must only be handled by personnel who are skilled and experienced in unpacking and transporting heavy equipment.

All work must be carried out by qualified personnel according to the site and equipment requirements and in compliance with the local regulations.

Transport conditions

The transport conditions for the drive are based on IEC 60721-3-2 'Classification of environmental conditions: Classification of groups of environmental parameters and their severities; Transportation'.

Parameter	Limits
2K12 (Climatic conditions), 2C2 (Chemical gases), 2B1 (Biological conditions), 2S5 (Solid particles), 2M4 (Vibration and shock)	
Low air temperature	- 45 °C
High air temperature	70 °C
Relative humidity	5 to 95 %, no condensation

Unpacking and inspection

1. Remove all packaging material carefully.
2. Check the drive and accompanying equipment for damages.
3. Compare the complete delivery with the purchase order and the packing list.
4. If parts are missing or damaged, immediately inform the shipping company and ABB.
5. It is recommended to photograph the damages and send the photographs to ABB.

Lifting and transportation

It is recommended to have the following information at hand before transporting the cabinet:

- Chapter *Technical data* provides details on dimensions, weight, and of center of gravity of the cabinet.
- Chapter *Maintenance* provides instructions if the door of the INU compartment cannot be opened.

General notes on transportation

- Drive components can be damaged during transportation. Therefore, transport the cabinet in an upright position.
- Transport separated units only!
- Keep the doors closed to prevent dirt from entering. Metallic dust in particular can cause damage and failure when the drive is energized.

Dimensions and weights

- Choose the load capacity according to the following table?for center of gravity see the *ACS580MV Gravity Center for Packing*.

Type	Drive unit				Transformer unit			
	Height (mm)	Depth (mm)	Width (mm)	Weight (kg)	Height (mm)	Depth (mm)	Width (mm)	Weight (kg)
3.3R4	2821	1198	2530	3010	Transformaer unit intigrated with Drive unit			
3.3R5	2821	1198	2530	3280				
3.3R6	2821	1198	2530	3550				
4.16R4	2821	1198	2530	3360				
4.16R5	2821	1198	2530	3620				
4.16R6	2821	1198	2530	4100				
3.3R7	2571	1398	2215	1480	2571	1398	2415	3300
3.3R8	2571	1398	2215	1525	2571	1398	2415	3900
3.3R9	2571	1398	2215	1615	2571	1398	2615	4660

Type	Drive unit				Transformer unit			
	Height (mm)	Depth (mm)	Width (mm)	Weight (kg)	Height (mm)	Depth (mm)	Width (mm)	Weight (kg)
4.16R7	2571	1398	2215	1630	2571	1398	2415	3730
4.16R8	2571	1398	2215	1690	2571	1398	2415	4330
4.16R9	2571	1398	2215	1810	2571	1398	2615	5260
6/6.3R1	2571	1198	1815	1100	2571	1198	2215	1800
6/6.3R2	2571	1198	1815	1150	2571	1198	2215	1950
6/6.3R3	2571	1198	1815	1200	2571	1198	2215	2300
6/6.3R4	2571	1198	1815	1300	2571	1198	2215	2700
6/6.3R5	2571	1198	1815	1300	2571	1198	2215	3300
6/6.3R6	2571	1198	1815	1350	2571	1198	2415	3650
6/6.3R7	2571	1398	3015	2300	2571	1398	2615	4800
6/6.3R8	2571	1398	3015	2450	2571	1398	2615	6350
6/6.3R9	2571	1398	3015	2600	2571	1398	3215	7700
6.6R1	2571	1198	1815	1150	2571	1198	2215	1850
6.6R2	2571	1198	1815	1200	2571	1198	2215	2100
6.6R3	2571	1198	1815	1250	2571	1198	2215	2450
6.6R4	2571	1198	1815	1350	2571	1198	2215	2950
6.6R5	2571	1198	1815	1400	2571	1198	2215	3400
6.6R6	2571	1198	1815	1450	2571	1198	2415	4150
6.6R7	2571	1398	3415	2800	2571	1398	2615	5000
6.6R8	2571	1398	3415	2900	2571	1398	2815	6600
6.6R9	2571	1398	3415	3200	2571	1398	3215	8150
10R1	2571	1198	1815	1200	2571	1198	2215	2100
10R2	2571	1198	1815	1250	2571	1198	2215	2450
10R3 A/B/C	2571	1198	1815	1300	2571	1198	2215	2800
10R3D	2571	1198	1815	1350	2571	1198	2215	3050
10R4	2571	1198	2215	1550	2571	1198	2215	3550
10R5	2571	1198	2215	1600	2571	1198	2415	4300
10R6	2571	1198	2215	1650	2571	1198	2415	4950
10R7	2571	1398	3815	3400	2571	1398	2815	6700
10R8	2571	1398	3815	3500	2571	1398	3215	8800
10R9	2571	1398	3815	3800	2871	1398	3215	10800
10.5/11 R1	2571	1198	1815	1250	2571	1198	2215	2250
10.5/11 R2	2571	1198	1815	1300	2571	1198	2215	2700
10.5/11 R3	2571	1198	1815	1350	2571	1198	2215	3050

Type	Drive unit				Transformer unit			
	Height (mm)	Depth (mm)	Width (mm)	Weight (kg)	Height (mm)	Depth (mm)	Width (mm)	Weight (kg)
10.5/11 R4	2571	1198	2215	1600	2571	1198	2415	4000
10.5/11 R5	2571	1198	2215	1650	2571	1198	2415	4350
10.5/11 R6	2571	1198	2215	1700	2571	1198	2415	5500
10.5/11 R7	2571	1398	4615	4000	2571	1398	2815	7200
10.5/11 R8	2571	1398	4615	4200	2571	1398	3215	9200
10.5/11 R9	2571	1398	4615	4500	2871	1398	3215	11600

Using a crane

- Use lifting equipment (e.g, web slings, chain slings, round slings, safety hooks, shackles) that corresponds to the weight of the cabinet.
- Use a metal beam through the holes in the base frame.
- Use appropriate safety hooks or shackles to attach a sling.
- Do not pass a sling through the fastening hole.
- Verify that the slope angle (1 in figure below) corresponds to the weight of the cabinet.

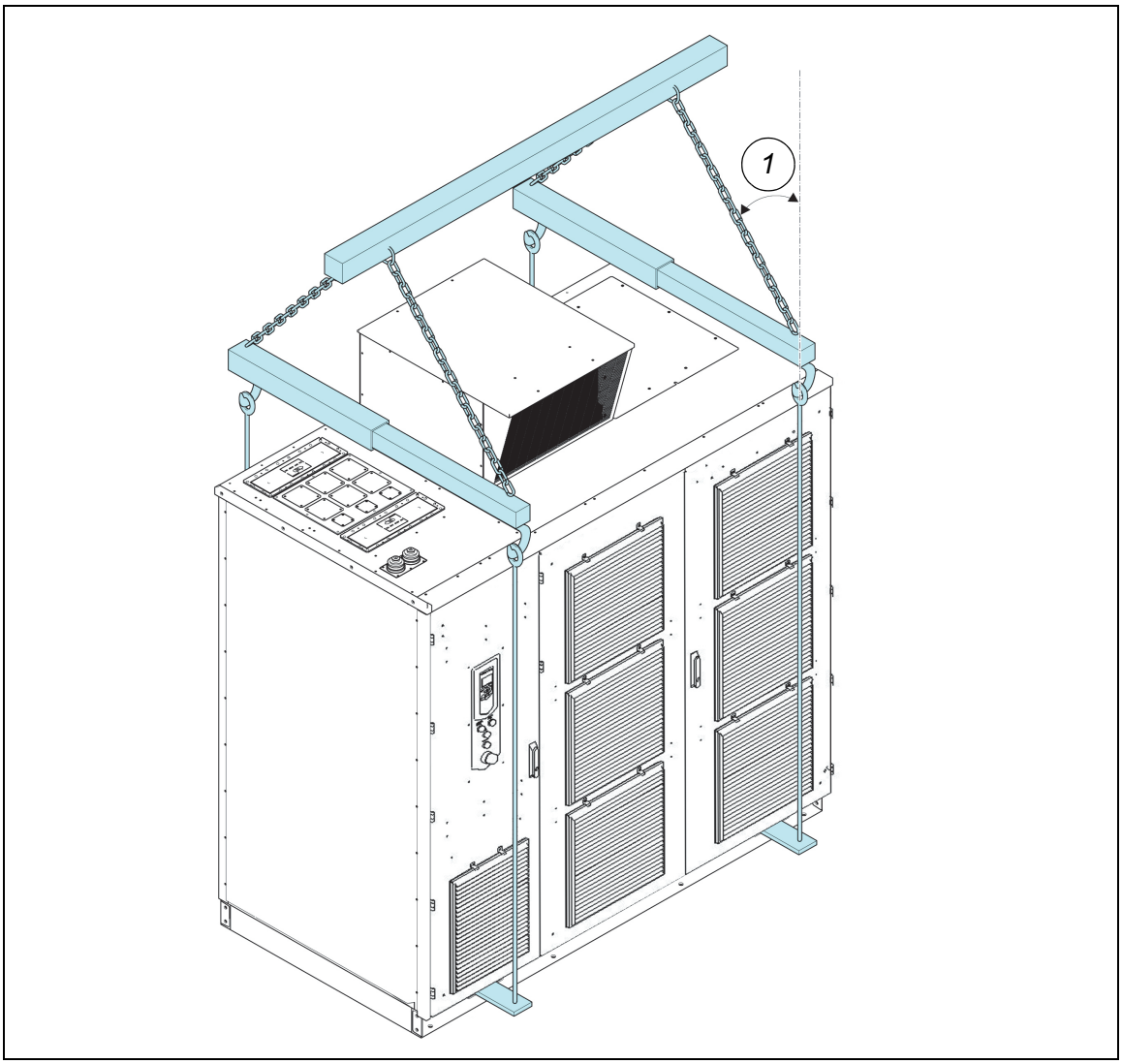

- Observe the center of gravity (see the *ACS580MV Gravity Center for Packing*).
- Lift the cabinet slowly and steadily to the required clearance height maintaining the cabinet in upright position.
- Check the horizontal position of the cabinet. Reposition the slings, if necessary.

Using a forklift

- Only transport the cabinet with the long side facing the driving direction.

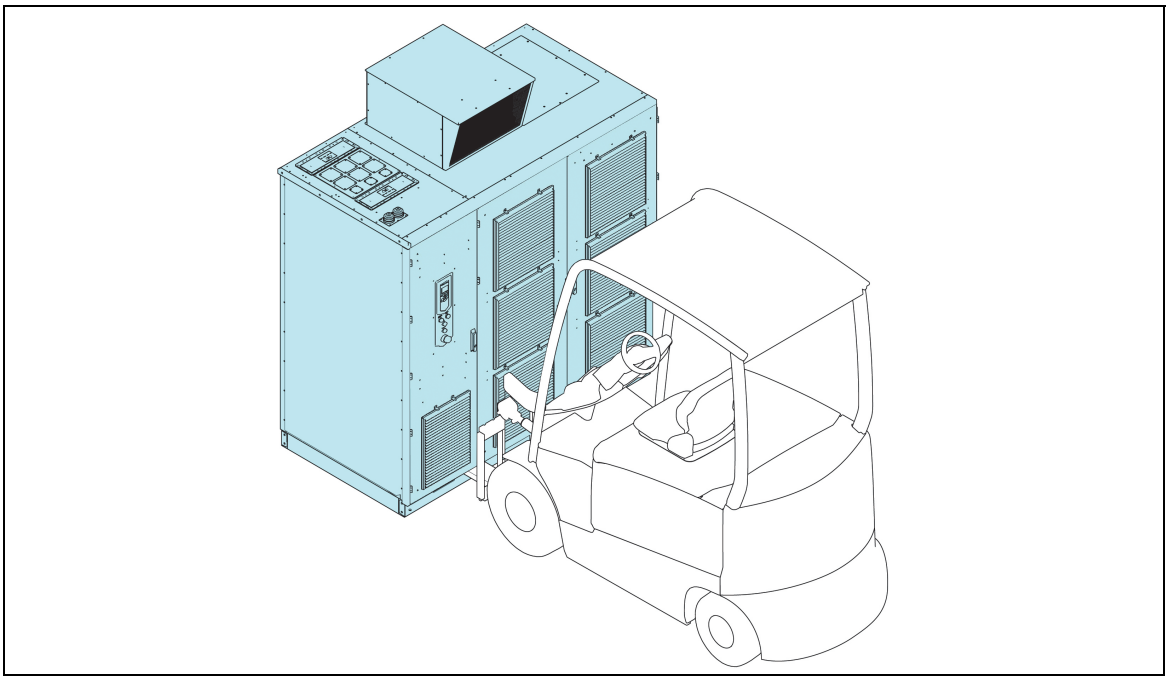

- Use forks with sufficient length to ensure stable transportation and to prevent tipping.

  The forks must be at least as long as the cabinet.
- Insert the fork fully into the cabinet's forklift pockets.

Storage

Storage conditions

The minimum requirements for storage are based on IEC 60721-3-1 'Classification of environmental conditions: Classification of groups of environmental parameters and their severities; Storage'.

Parameter	Limits
1K22 (Climatic conditions), 1C2 (Chemical gases), 1B1 (Biological conditions), 1S11 (Solid particles), 1M11 (Vibration and shock).	
Low air temperature	- 25 °C
High air temperature	55 °C
Relative humidity	5 to 95 %, no condensation

Cabinets can be stored for up to one year in the original packaging as long as they are not damaged or opened. For information on longer storage periods, contact the ABB service organization.

Preparing cabinets for storage

If the drive is taken out of service for a longer time proceed as follows:

1. Cover all cable inlets and ventilation slots with an impermeable plastic or aluminum foil and a wooden panel.
2. Add a desiccant of the appropriate quality:
   - 1 unit desiccant (30 g) absorbs 6 g water vapor.

   The following quantity is needed when using a polyethylene foil:

   - 10 units/m^2 foil
3. Close and lock the doors of the cabinet.
4. Use polyethylene or equivalent for packaging:
   - 0,3 g/m^2/24 h water vapor diffusion
5. Attach humidity indicators to the packaging.

Check the storage conditions and the packaging regularly. Immediately repair any damages that occur during the storage period.

Storage and handling instructions for spare parts

Electronic devices (e.g, circuit boards, power modules) are sensitive to electrostatic discharge (ESD). ESD can damage these devices.

Apply ESD handling precautions before handling these devices.

Check the spare parts immediately after receipt for damages. Report any damage to the shipping company and the ABB service organization.

Observe the following to maintain spare parts in good condition and to keep the warranty valid during the warranty period:

- Keep spare parts in their original packaging.
- Store printed circuit boards in anti-static bags or boxes.
- Storage temperature range: - 5 °C to + 55 °C (23 °F to 131 °F)
- Storage place requirements:
  - Free of vibration and shock
  - Protected against dust, sand, vermin and insects
  - Free of corrosive gases, salt or other impurities that could damage electronic equipment
  - Dry; no condensation
  - Relative air humidity: 5 to 95%, no condensation
    If in doubt whether the maximum allowed humidity is exceeded, protect the spare parts by an external heater.
- Ground yourself with a wrist strap before touching a component.
- Put the component on a grounded working surface protected against electrostatic discharges.
- Hold the component only at the edge.
- Reforming capacitors of the power modules:

  Power modules that are used as spare parts must be installed and operated in a drive every 2 years in order to reform the capacitors and thus reduce the risk of a

potential hazard. For detailed information, go to section *Reforming capacitor of power modules*.

Disposal of packaging materials and components

Dispose of the packaging materials and the drive components at the end of the life time of the drive according to the international and local regulations.

The main parts of the drive can be recycled to preserve natural resources and energy. Product components and materials should be dismantled and separated.

Generally all metals, such as steel, aluminum, copper and its alloys, and precious metals can be recycled. Plastics, rubber, cardboard and other packaging material can be used in energy recovery. Printed circuit boards and capacitors need selective treatment according to IEC 62635 guidelines. To aid recycling, plastic parts are marked with an appropriate identification code.

Contact your local ABB distributor for further information on environmental aspects and recycling instructions for professional recyclers.

7

Mechanical installation

Contents of this chapter

This chapter describes the mechanical installation procedure of the drive.

Safety

All installation work must be carried out by qualified personnel according to the site and equipment requirements and in compliance with the local regulations.

Examining the installation site

Examine the installation site (see the *ACS580MV Engineering Guideline*):

- The installation site is sufficiently ventilated or cooled to transfer away the drive losses. [1)]
- The ambient conditions of the drive meet the specifications. [1)]
- The wall behind the unit is of non-flammable material.
- There is enough free space above the drive to enable cooling air flow, service and maintenance. See the *ACS580MV Base frame & TEU layout design*.
- The floor that the unit is installed on is of non-flammable material, as smooth as possible, and strong enough to support the weight of the unit. Check the floor flatness with a spirit level. The maximum allowed deviation from the surface level is 5 mm in every 5 meters. Level the installation site, if necessary, as the cabinet is not equipped with adjustable feet.

[1)] The heat losses and ambient conditions are specified in the *ACS580MV Engineering Guideline*.

Necessary tools

The tools required for moving the unit to its final position, fastening it to the floor and wall and tightening the connections are listed below:

- crane, fork-lift (check load capacity!), iron bar, jack and rollers
- Pozidrive and Torx (2.5…6 mm) screwdrivers
- torque wrench
- set of wrenches or sockets

Overview on installation work

The installation includes the following work:

- Preparing the foundation
- Moving the converter and transformer units to their final location
- Aligning and bolting together the units
- Fixing base frames to the floor

General notes on installation

Foreign matter and particularly metallic dust can cause failure and damage when the drive is energized.

Ensure that foreign matter cannot enter the cabinet:

- Close the doors and cover openings completely when work is discontinued.
- Retrieve any foreign matter which accidentally dropped into the cabinet.

Dimensions, clearances

See Outline drawing for information on:

- Cabinet dimensions
- Clearances to be observed
- Mounting hole sizes

Preparing the foundation

The floor must be of non-flammable material, with a smooth and non-abrasive surface, protected against humidity diffusion, leveled and able to support the weight of the cabinet.

The maximum recommended allowable overall unevenness is £ 5 mm per 5 m.

Cable ducts

Cable ducts should be of non-flammable material with a non-abrasive surface.

All cable entries and exits should be protected to prevent dust, humidity and animals entering the drive.

Fire protection

Suitable fire protection measures should be applied to prevent fire spreading into the drive.

Cabinet roof

The cabinet roof is not designed as a mounting base for foreign devices, cable ducts and

so on. Therefore, it is not permitted to install any foreign device on the roof.

Installing fan units

AC fans are already mounted when delivered from works.

EC fans need to be installed with fan box in the field.

- For information on the number of fan units to be installed, see *ACS580MV Outline Drawing*.

Recognize fan

The fan can be match to its mounting position by recognize below labels:

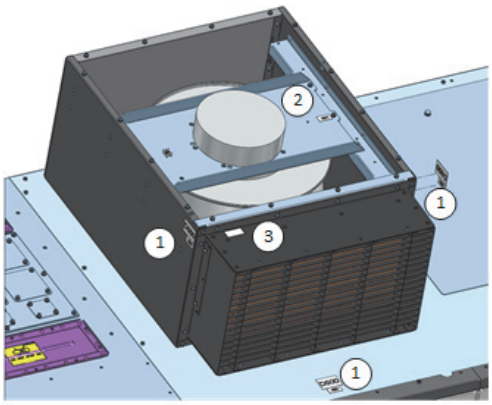

1	Fan type and position label	3	Sn labels include CON/TRU Sn number (For EC Fan)
2	Fan position label	4	Sn labels include CON/TRU Sn number

Installation (without air channel)

1. Lift the fan unit onto the cabinet roof by means of a forklift or a crane (if using a crane, empty the lifting eyes in the fan roof).

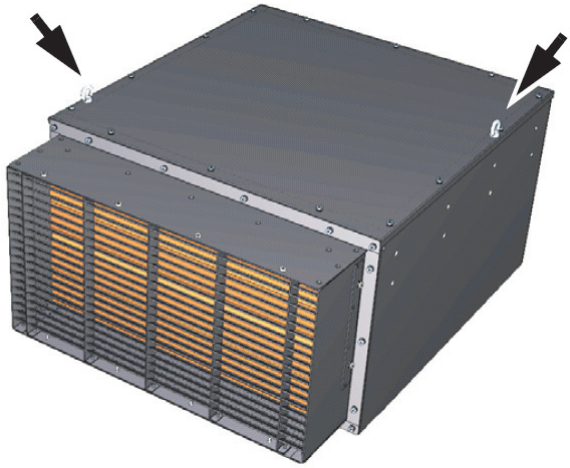

- ~70 kg for EC500 fan units
- ~90 kg for EC560 fan units

NOTICE

The mounting position can be identified by the cutouts in the drive roof.

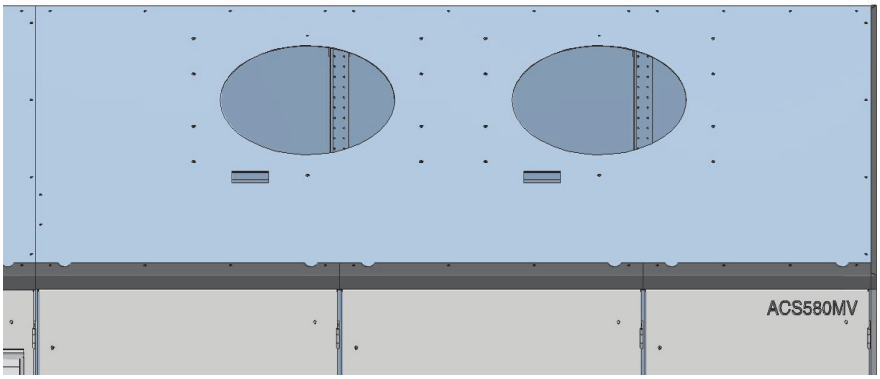

2. Use the supplied screws to fasten the fan units to the cabinet roof.

For information on the electrical installation, see *Control and power supply cables for fan units.*

For 3.3 kV (Power ≤ 710 kW) and 4.16 kV (Power ≤ 870 kW), EC fans need to be installed with fan box and air channel in the field.

Installation (with air channel)

1. Install air channel on the drive roof.

   - ~40 kg for air channel

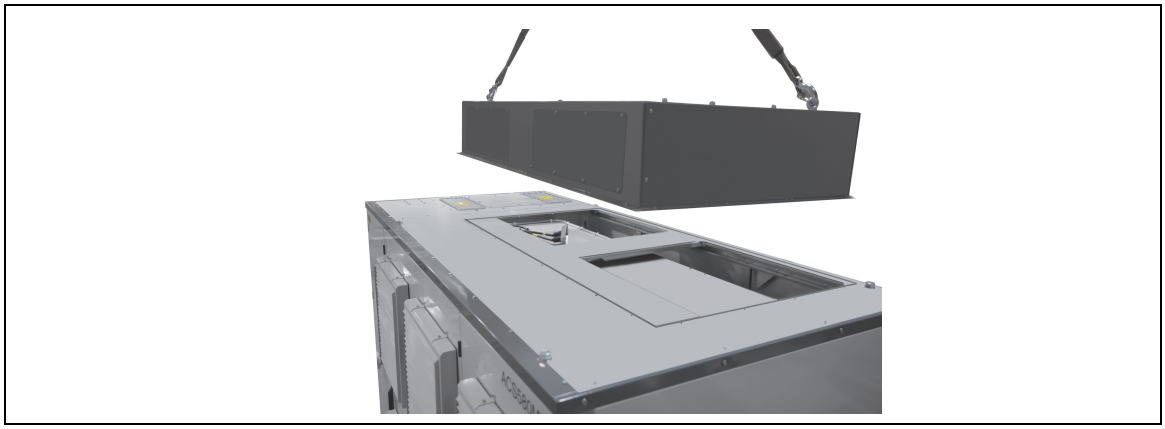

2. Lift fan unit onto the air channel.

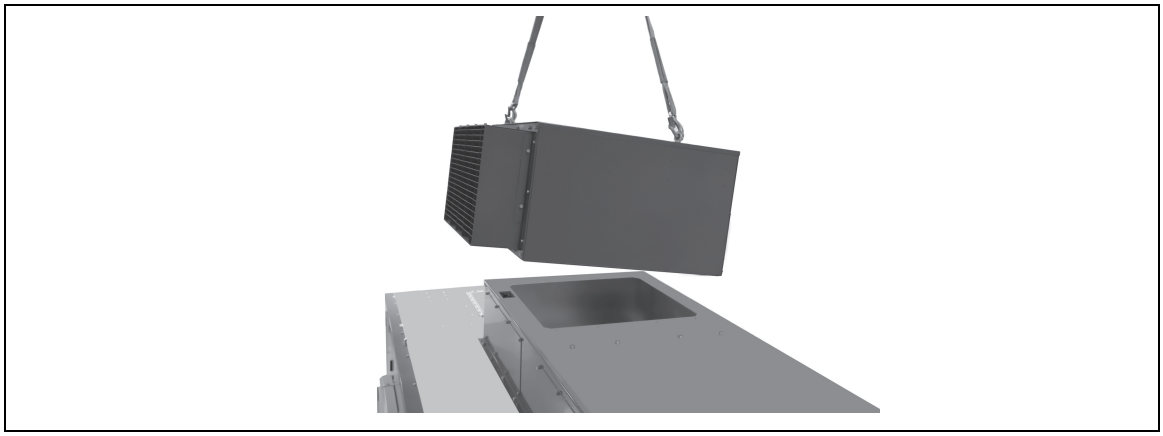

Bolting together the units

Required bolts are attached to the drive unit side wall adjoining the transformer unit. Align the units. Then bolt the units together using the 12 hexagonal bolts with 5N·M(see figure below).

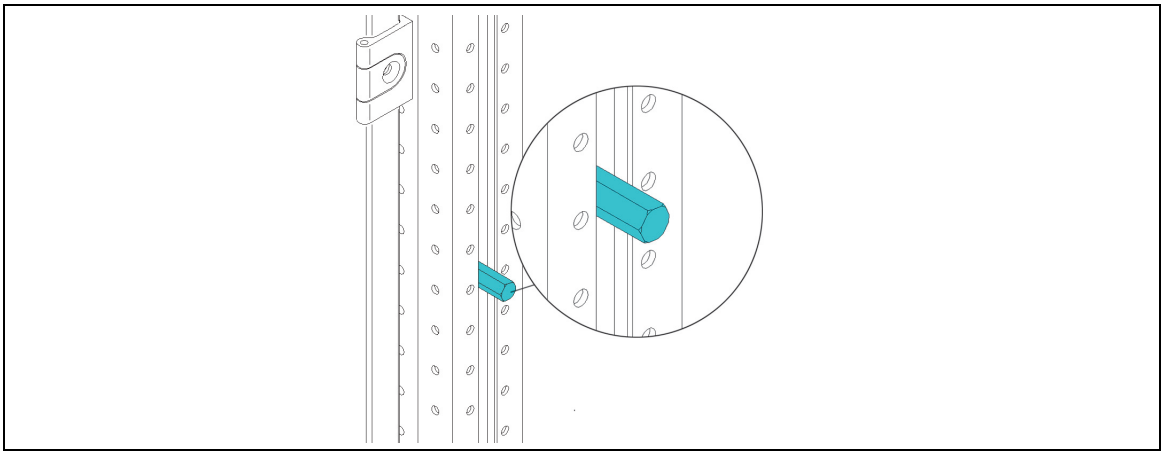

Fixing units to the floor

Floor fixings are not supplied. 16 anchor bolts as illustrated (B in figure below), or screws, nuts and washers of size M16 are recommended (diameter of holes in base frame: 18 mm).

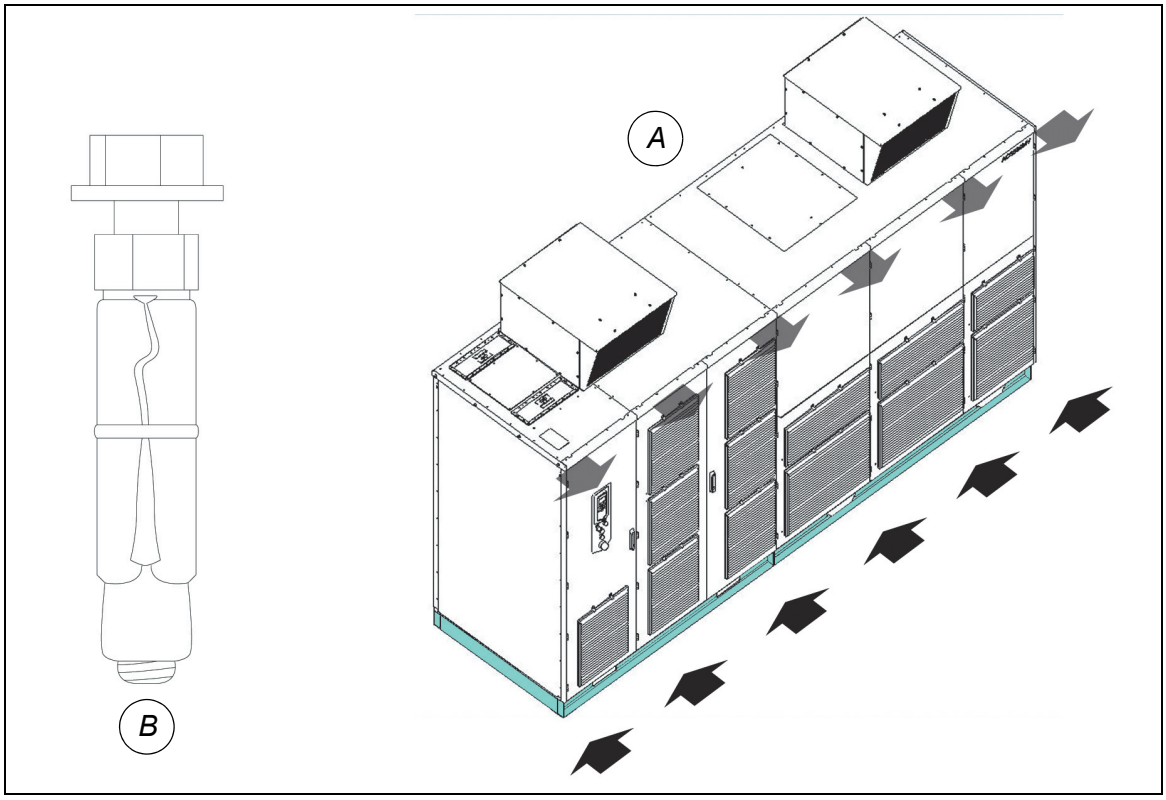

Fixing the base to the floor

Location of tool kit and accessories

1. **COU Key**

   Key for control unit fix on the door of COU.

2. **Combination screws**

   Screws for combining converter and transformer are fixed on the door of control unit.

3. **Tool Kit**

   You can find the tool kit by open the door of control unit. It is on the bottom of the cabinet.

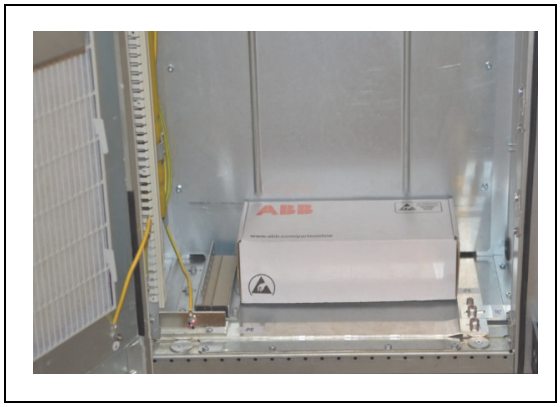

Open the box, you can find all the tools and accessories for future use. A description of all the items in the kit is delivered alongside. Please pay attention to the screw driver which is used for open the transformer cabinet is in this box,

it should be kept by authorized person, actions without authorization are dangerous.

4. **Absorbing material in cabinet - Desiccant**

   Place Desiccant in the cabinet, one bag for per door, position them on the bottom plate uniformly distributed.

   Notice: Take out from the cabinet in time after unpacking. To prevent other violations.

COU

INU

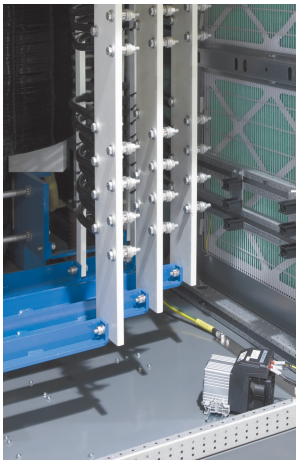

TRU

Combine cabinet primary cables installation

Step 1: Take down the 3x primary cables fixing on the INU side plate. Unfold the phase A, B and C power cables from bottom to top and should not cross each other.Disassemble the insulation covers from the front primary terminals. Connect the cables to the corresponding terminals of the transformer with 40N.

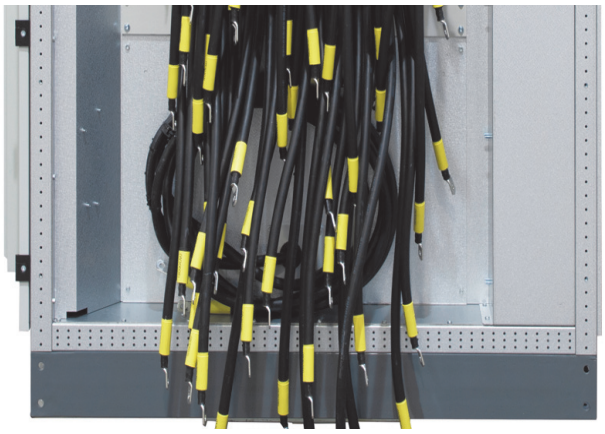

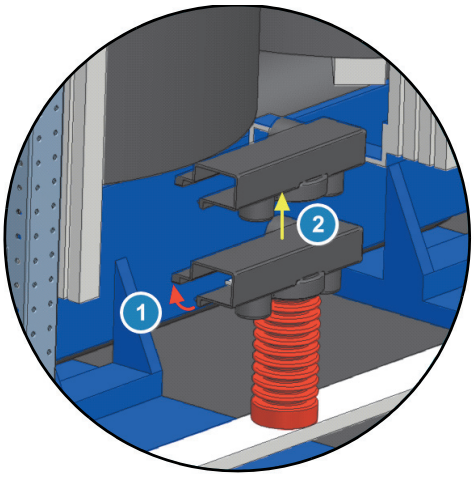

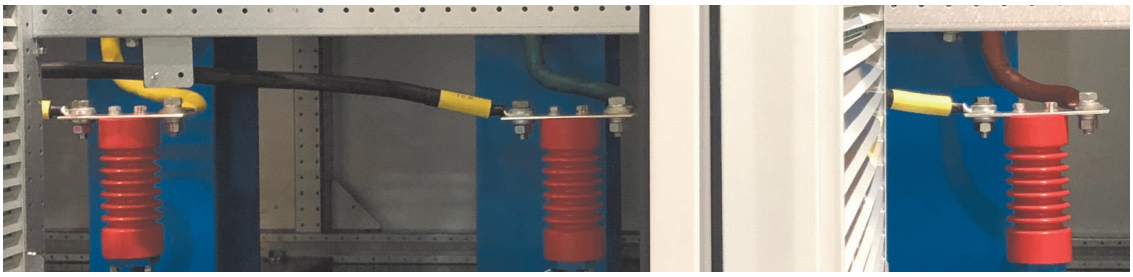

Step 2: Remove the cable tie bag from the cabinet frame. Fixing phase A cable on the black support block which have installed on the frame with cable ties.

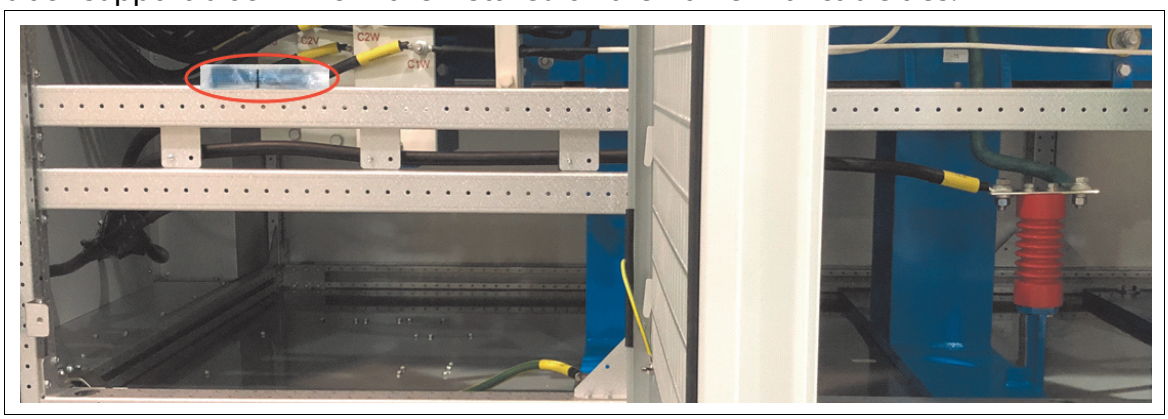

The fixing order should be from right to left as shown in the following figure.

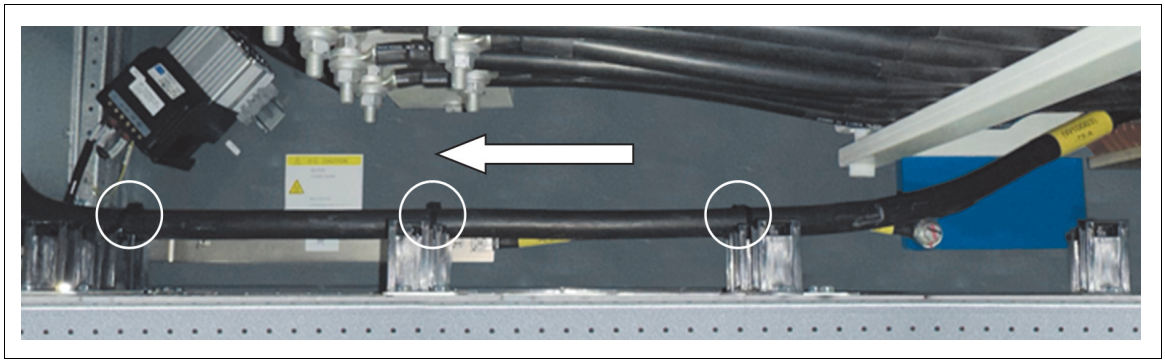

Step 3: Fixing phase B cable on the black support block which have installed on the frame with cable ties. The fixing order should be from right to left as shown in the following figure.

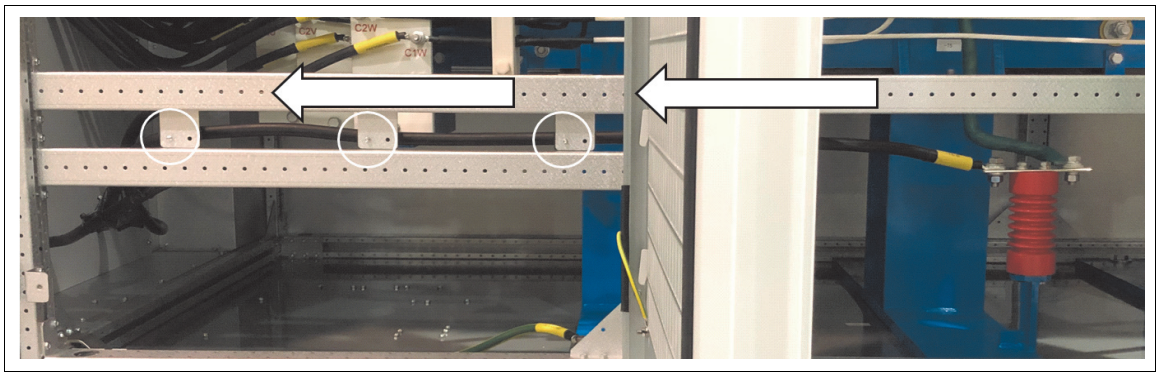

Step 4: Fixing phase C cable on the black support block which have installed on the frame with cable ties. The fixing order should be from right to left as shown in the following figure.

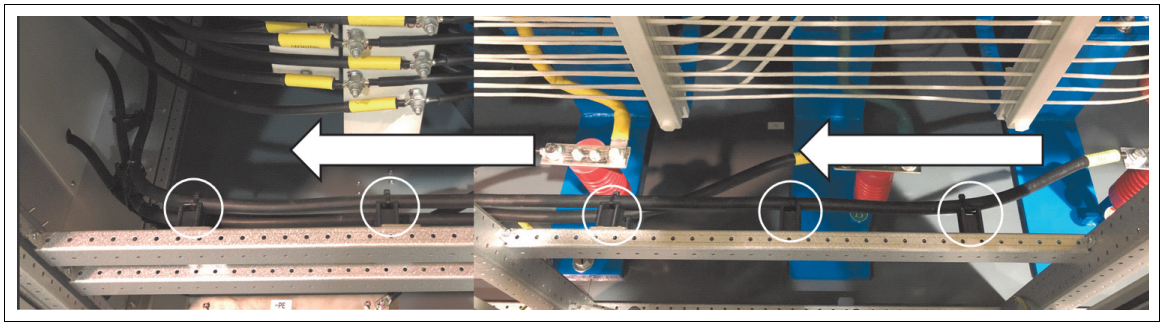

Step 5: Mount back the insulation cover after the cable connection confirmed.

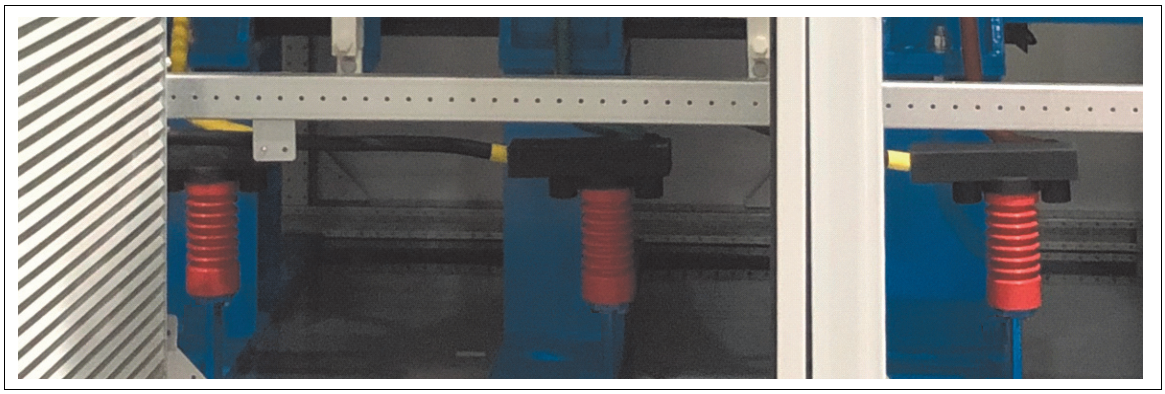

Step 6: Adjusting the cable position. The 3x primary cables should keep at least 5 mm distance with each other and keep at least 20 mm distance with metal cabinet.

8

Electrical Installation

Contents of this chapter

This chapter gives instructions on the installation of the power cables and wiring of control and auxiliary power.

Safety

WARNING Hazardous voltage!

Improper work could lead to life-threatening injury or death.

The electrical installation must be carried out by qualified personnel according to the site and equipment requirements, and the relevant electrical codes.

When the electrical installation is completed, the main and auxiliary power supply to the drive must not be switched on without the consent of the ABB commissioning personnel.

Take appropriate measures to prevent main and auxiliary power supply from being switched on during installation.

Overview of installation work

The electrical installation includes the following wire and cable connections:

- Cables between integrated transformer and drive
- Power cables, ground cables
- Auxiliary power, control and serial communication cables
- Power supply and signal cables for fans in transformer unit

Cable requirements

For information on the requirements for power cables and the ground cable see the *ACS580MV Engineering Guideline*.

For information on the requirements for the auxiliary power cable and the control cables, see Auxiliary power and control cables guideline.

Parallel routing of power cables

Cables between drive and motor can be laid in parallel. The number of cables laid in parallel is limited by the number of entry holes of the entry plate.

For information on the supply voltages, see Rating label of the drive.

Connecting external wiring to the control unit or optional I/O terminal block

Leave the other ends of the control cable shields unconnected or ground them indirectly via a high-frequency capacitor with a few nanofarads. The shield can also be grounded directly at both ends if they are in the same ground line with no significant voltage drops between the end points.

Note: Keep any signal wire pairs twisted as close to the terminals as possible. Twisting the wire with its return wire reduces disturbances caused by inductive coupling.

Ground the pair-cable shields the grounding clamp. Do not connect shields of different cables to the same grounding clamp.

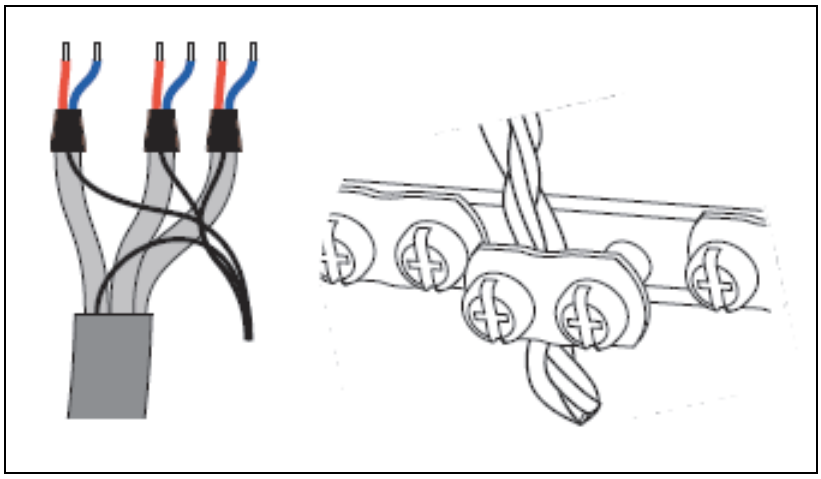

Terminal sizes for auxiliary and control connections

Customer I/O terminal	
Terminal	**Wire cross-section (mm^2)**
X1:1	1.5...2.5 mm^2 2 mm^2 recommonded
X1:3	
X1:5	
X1:7	
X1:9	
X1:11	
X1:13	
X1:15	
X1:17	
X1:19	0.2...2.5 mm^2 0.75 mm^2 recommonded
X1:21	
X1:23	
X1:25	
X1:27	
X1:29	
X1:31	
X1:33	
X1:35	
X1:37	
X1:39	
X1:41	
X1:43	
X1:45	
X1:47	
X1:49	
X1:51	
X1:52	
X1:53	0.75...2.5 mm^2 2 mm^2 recommonded
X1:54	
X1:55	
X1:56	
X1:57	0.2...2.5 mm^2 0.75 mm^2 recommonded
X1:58	
X1:59	
X1:60	
X1:61	
X1:62	
X1:63	
X1:64	
X1:65	
X1:66	
X1:67	
X1:68	

Customer supply connection terminals	
Terminal	**Wire cross-section (mm^2)**
X4:N X4:PE	2.5…4 mm^2 4 mm^2 recommonded
X5:N X5:PE	0.75…4 mm^2 2.5 mm^2 recommonded
X6 (X18) X6 (X18)	6…35 mm^2 25 mm^2 recommonded

Auxiliary power supply interface	
Terminal	**Wire cross-section (mm^2)**
F8(Q8): 1, 3, 5	16…35 mm^2 25 mm^2recommonded
F7(Q7): 1, 3, 5	6…25 mm^2 10 mm^2recommonded
Q4051(Q14): 1, 3	2.5…25 mm^2 4 mm^2 recommonded
Q4052(Q15): 1, 3	
Q4061(Q16): 1, 3	0.75…25 mm^2 2.5 mm^2 recommonded

Ground cable and cable shield connections

The cabinet is equipped with ground buses (marked PE, Protective Earth) for grounding the armor and shields of the cables, and for the connection of the ground cable.

To identify the ground buses, see ACS580MV Wiring Diagram.

Grounding of the drive system

Grounding of the drive system must be in line with the *ACS580MV Engineering Guideline*.

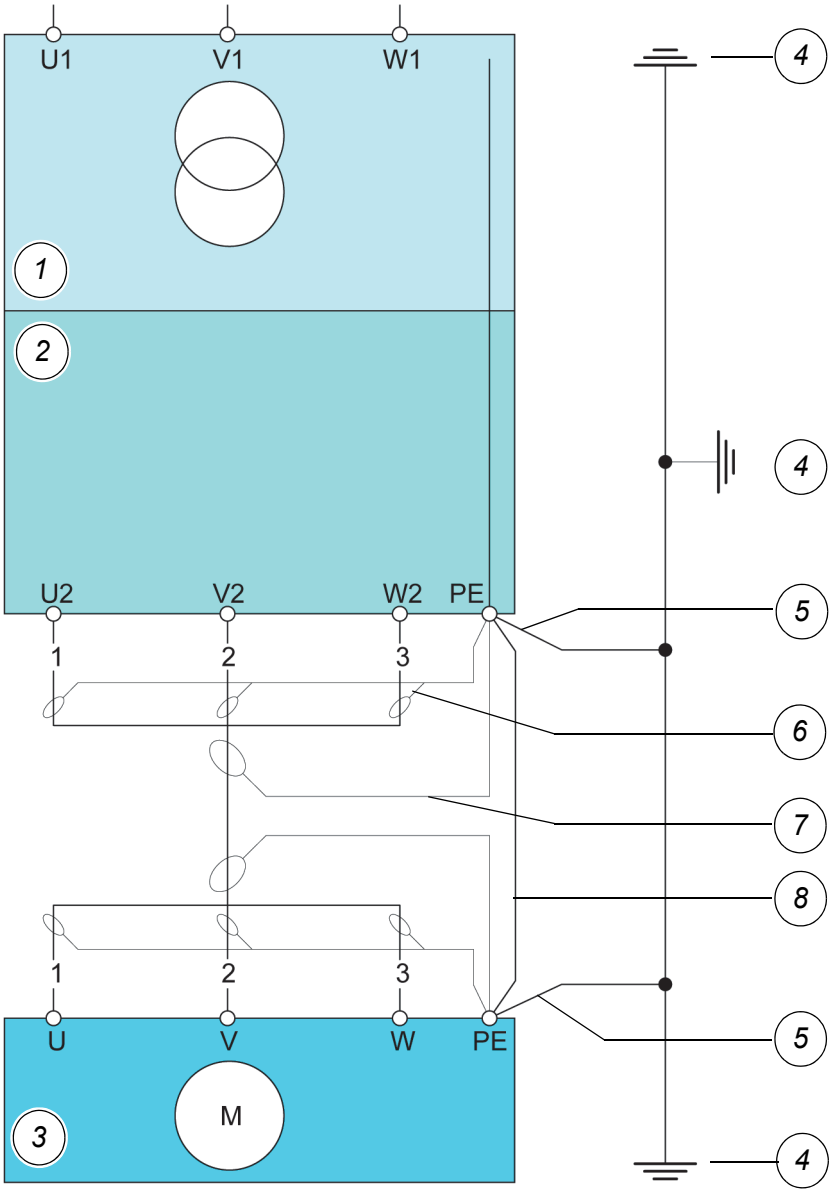

1	Input transformer (TRU)
2	Drive
3	Motor
4	Earth electrode
5	Ground cable
6	Cable screen
7	Cable shield
8	Equipotential bonding conductor

Grounding drive system and integrated transformer

Cables and PE busbar between integrated transformer and drive

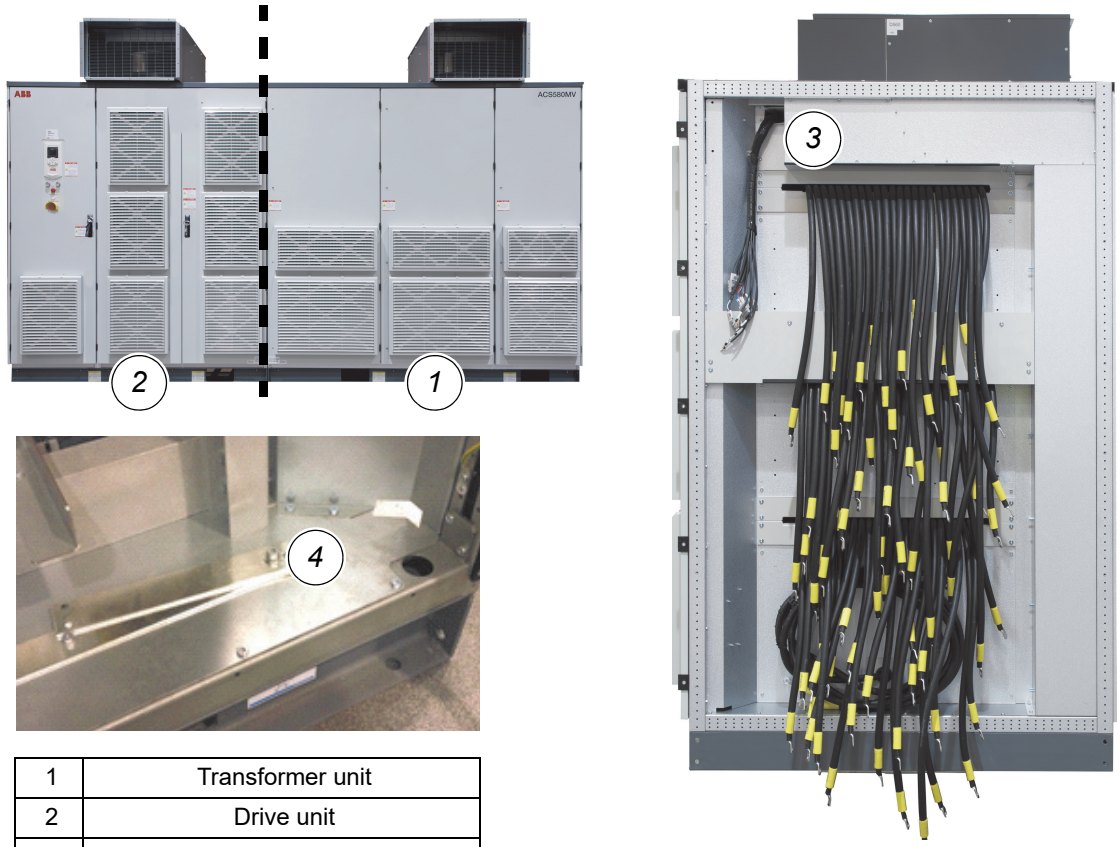

1	Transformer unit
2	Drive unit
3	Control cable lead-through
4	PE busbar

Drive with integrated transformer

Cables and PE busbar between drive and integrated transformer includes the following connections:

- Transformer primary and secondary cables
- Temperature sensor cables
- Three-phase power supply cable to each of the transformer fan units
- PE Busbar to connect INU and TRU.

  or

  Auxiliary supply from internal main transformer (option)
- Heating cable (option)

The cables are identified by their specific number and are labeled with the designation of the terminal where they are connected to.

The terminals for the primary and the secondary cables are located on the side wall of the drive cabinet. The transformer terminals are accessible through the left side door of the transformer unit. The cables must be mounted to the transformer terminals as shown in the figure below.

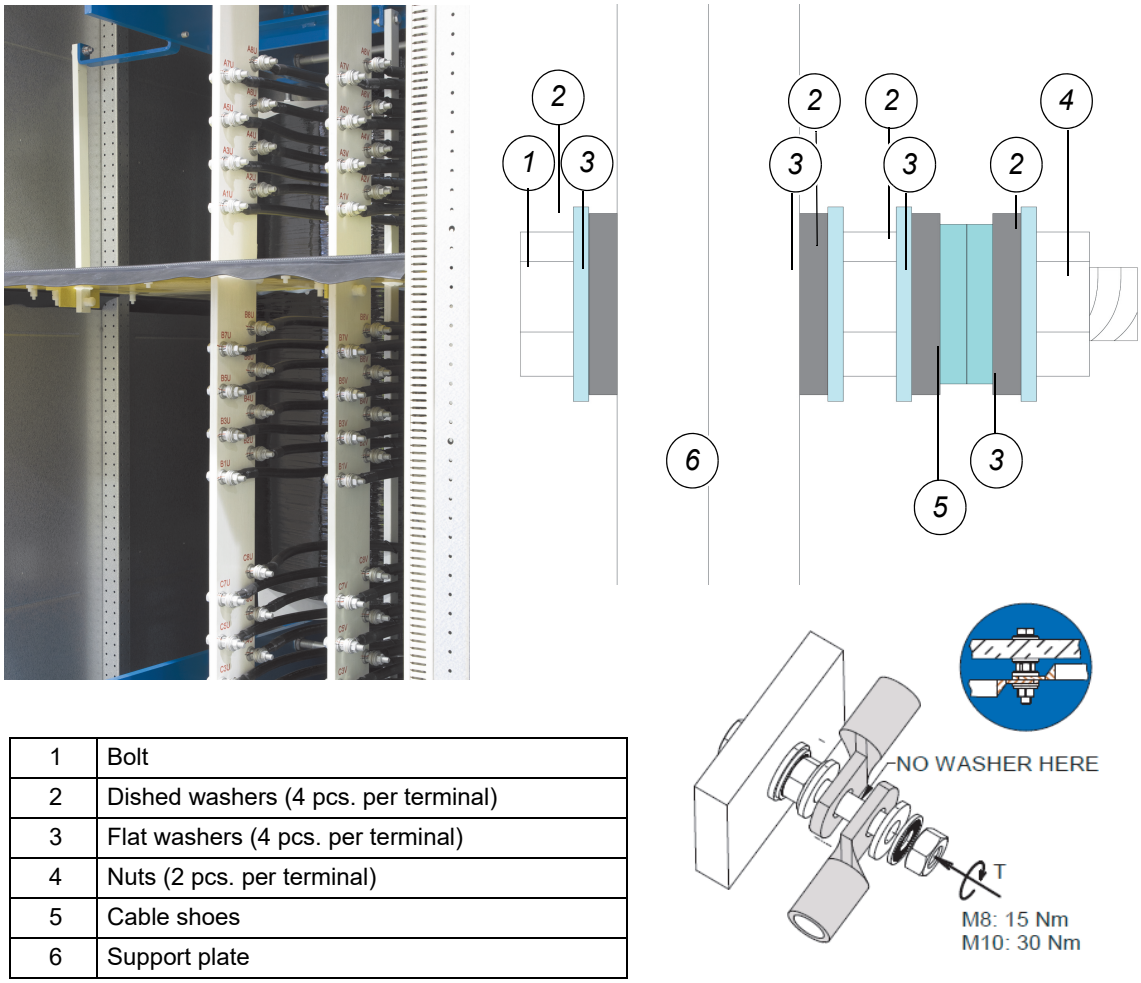

1	Bolt
2	Dished washers (4 pcs. per terminal)
3	Flat washers (4 pcs. per terminal)
4	Nuts (2 pcs. per terminal)
5	Cable shoes
6	Support plate

Transformer terminal connections

The supply cables for the fan units of the transformer and the control cables are routed through the cable lead-through in the side wall.

NOTICE

The required tightening torque for the internal transformer terminal connections is 15Nm (M8 bolt), 30Nm (M10 bolt). Use a torque wrench.

The PE busbar is connected with INU and TRU PE busbars through the side wall.

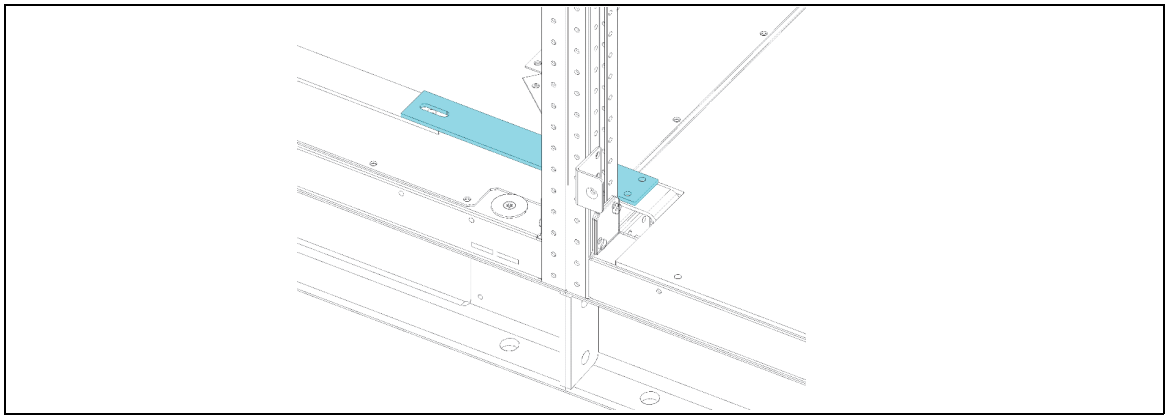

PE busbar connection

For further information on locating the temperature sensor cables, auxiliary power supply cables and the optional heating cable, see ACS580MV Wiring Diagram.

Cable entries for external connections

Power cable terminals are located in the terminal compartment behind the control compartment. They can be accessed after removing the metal cover (tripping loop terminals -XS1 on the cover must be opened first).

The drive is prepared for top or bottom cable entry with one or a combination of the following cable entries:

- Metal plate hole cable entry for power cables, ground cables
- Cable entry with EMC plates, EMC cushions and sealing grommets for auxiliary and control cables

For detailed information e.g. location and dimensions, see *ACS580MV Base frame & TEU layout design.*

Power cable entry via holes in cable entry plate

Power cable entry can be from bottom or top.

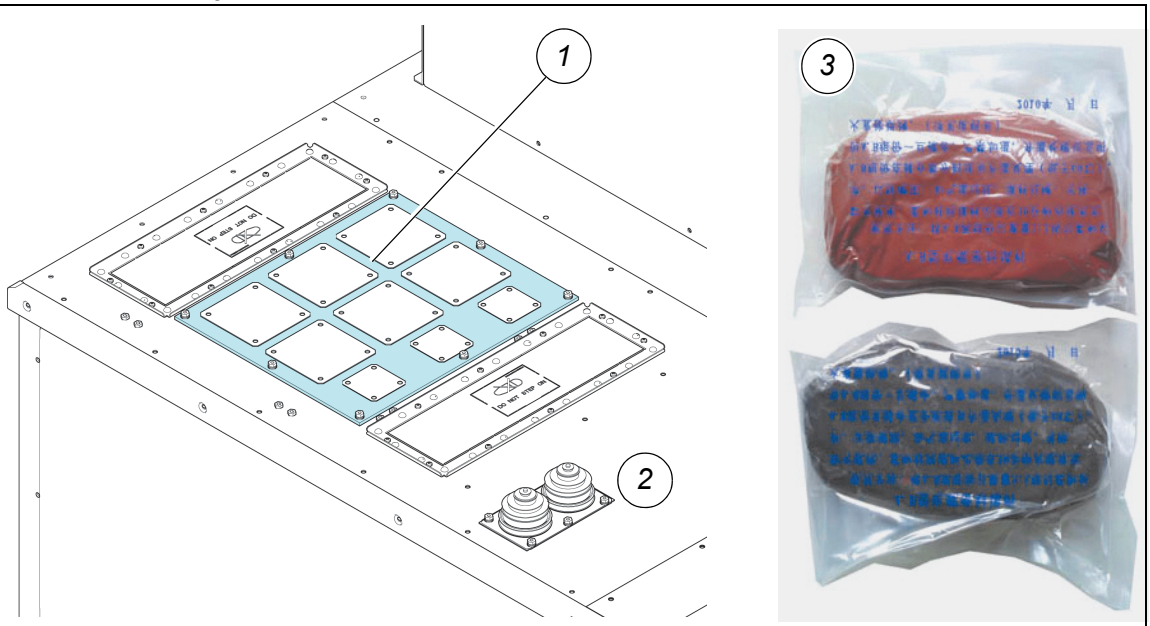

1	Power cable entry plate (in TEU)
2	Auxiliary and control cable entry (in COU)
3	Sealing compound

Galvanized plate for cable entry.

Plate mounted on top. See *Sealing holes in entry plates* for more information.

Control and auxiliary cable entry with EMC plates

Cable entry can be from bottom or top.

- Galvanized plate (1 in figure below) with EMC cushions (2, 3, 4) and sealing grommets (5). See *ACS580MV Base frame & TEU layout design* for details and for the possible mounting variants.

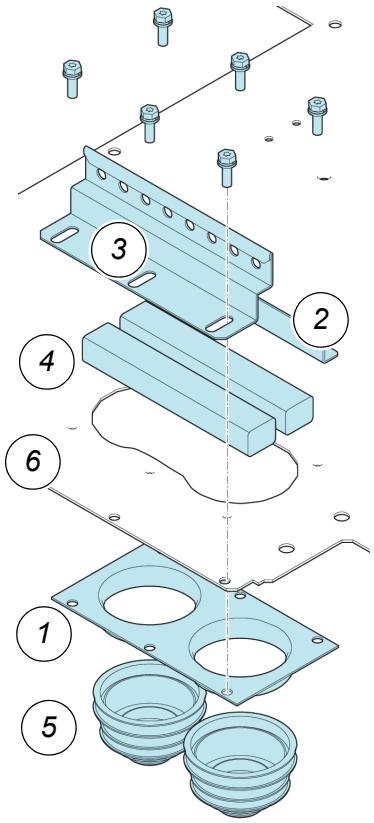

1	Lead through plate
2	Bracket
3	Bracket
4	EMC cushions
5	Sealing grommets
6	Opening in cable entry plate

Material for cable entry with EMC plate (bottom mounted)

The EMC cushions (1 in figure below) are mounted on the underside of the EMC plate when entering cables from top. They are mounted on top of the EMC plate when entering cables from underneath.

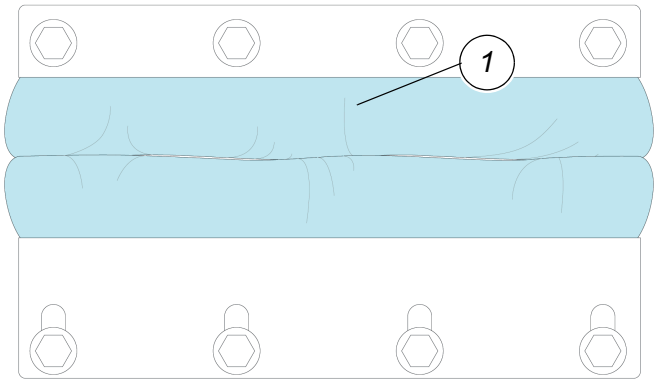

EMC cushion

See *Preparing the cables* for more information.

Installing power and ground cables

Further information

See *ACS580MV Base frame & TEU layout design* for information on:

- Project-specific cable entry
- Distance between the point of cable entry and the termination bars
- Busbar and fastening hole dimensions
- Busbar designations

See ACS580MV Wiring Diagram for information on:

- Conventions for cross-references and device identification

Preparing the cable entry and the cables

NOTICE

Risk of damage or malfunction!

Waste inside the cabinet can cause damage or malfunction.

If possible, do not cut cables inside the terminal compartment. Retrieve any waste which accidentally dropped into the cabinet.

Determining the cable length

1. Determine the required length of a cable between the point of entry and the connection point inside the cabinet.
2. Cut the cable to the required length before connection.

Preparing cables for entry plates

- Prepare the cable termination as illustrated in the figure below.

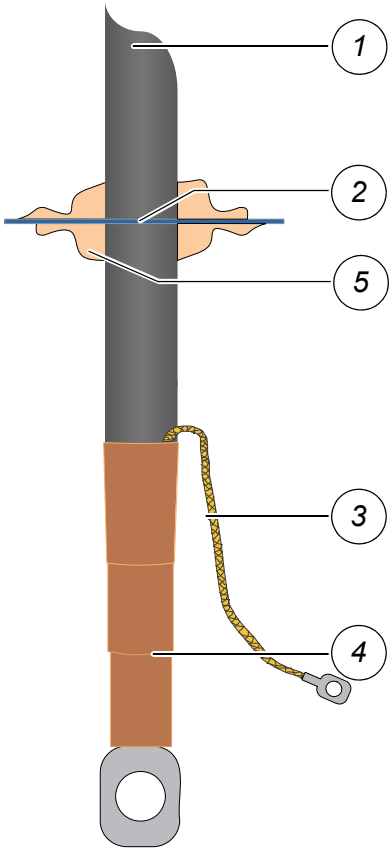

1	Outer cable sheath
2	Entry plate
3	Conductor screen extension to be connected to PE ground busbar.
4	Heat-shrinkable termination
5	Sealing compound

Power cable termination

Connecting the cables

NOTICE Risk of flash-over

High voltages will be present in the terminal compartment. High voltages can cause flash-over between the electric potential of different conductors, and the electric potential of a conductor and earth.

Therefore, a minimum clearance of **59.5 mm** must be maintained between a conductor and earth, and **90 mm** between a conductor and the terminals of any other conductor.

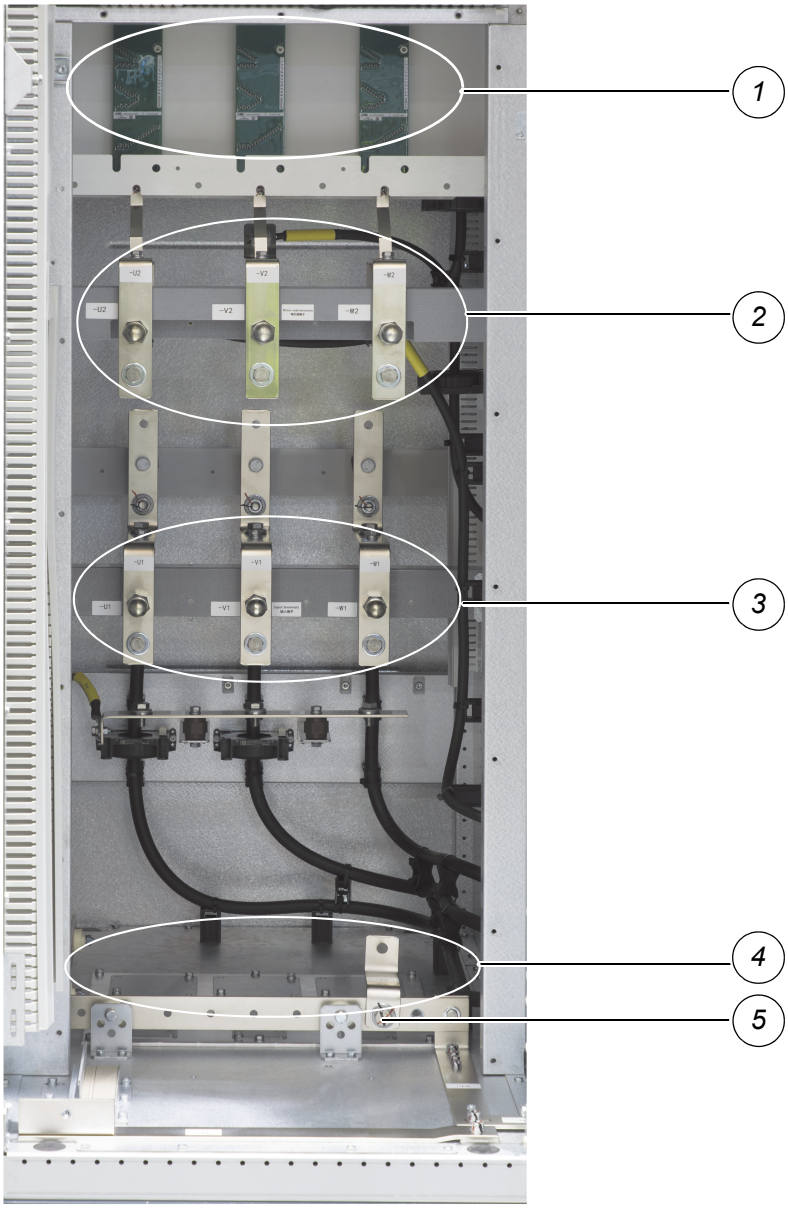

1	Voltage dividers
2	Motor side terminals
3	Input terminals
4	Cable entry plate (bottom plate)

Terminal compartment with cover plate removed, view from front

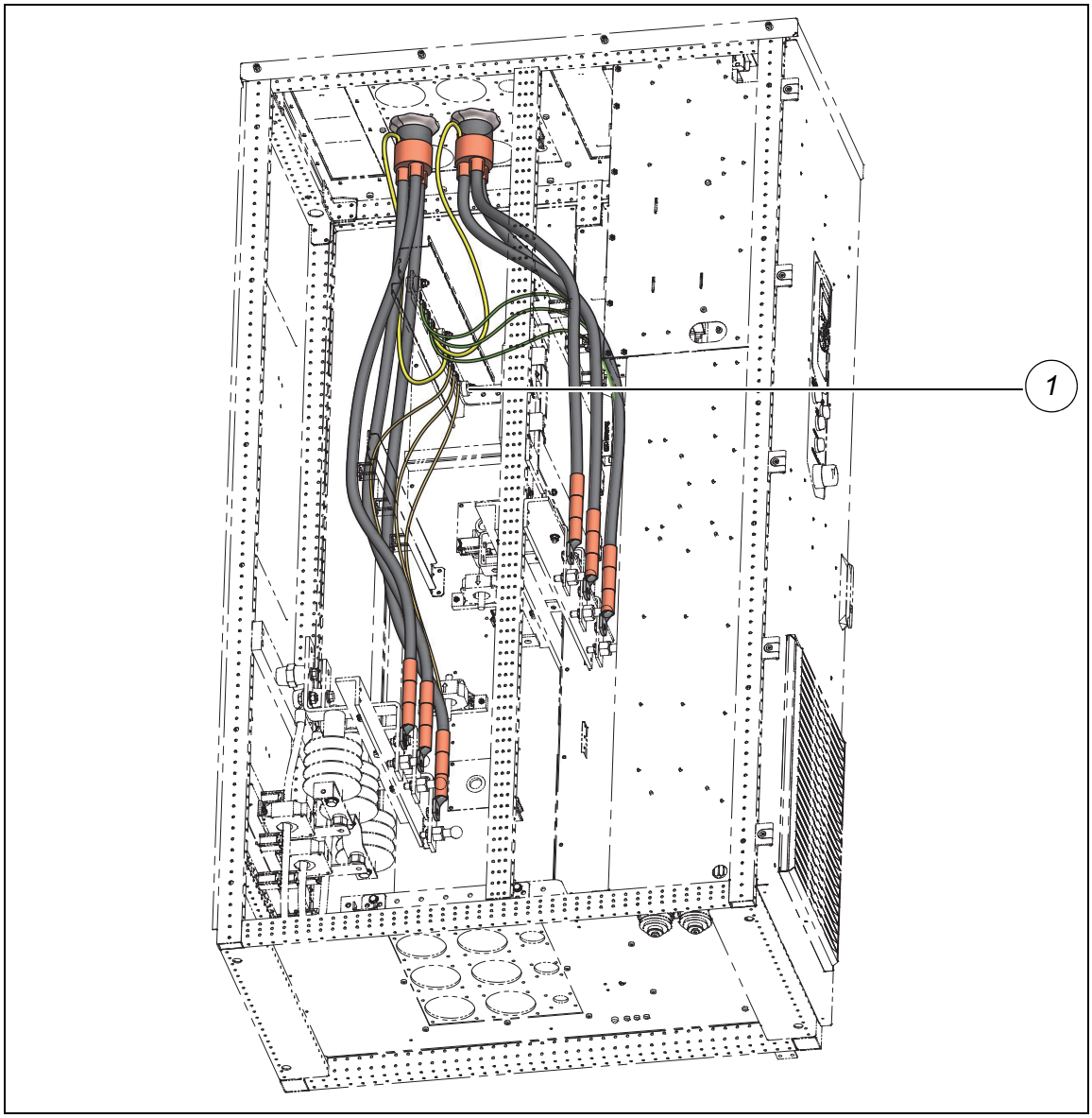

Side view: Power cable entry from top ((1) screen extensions to ground)

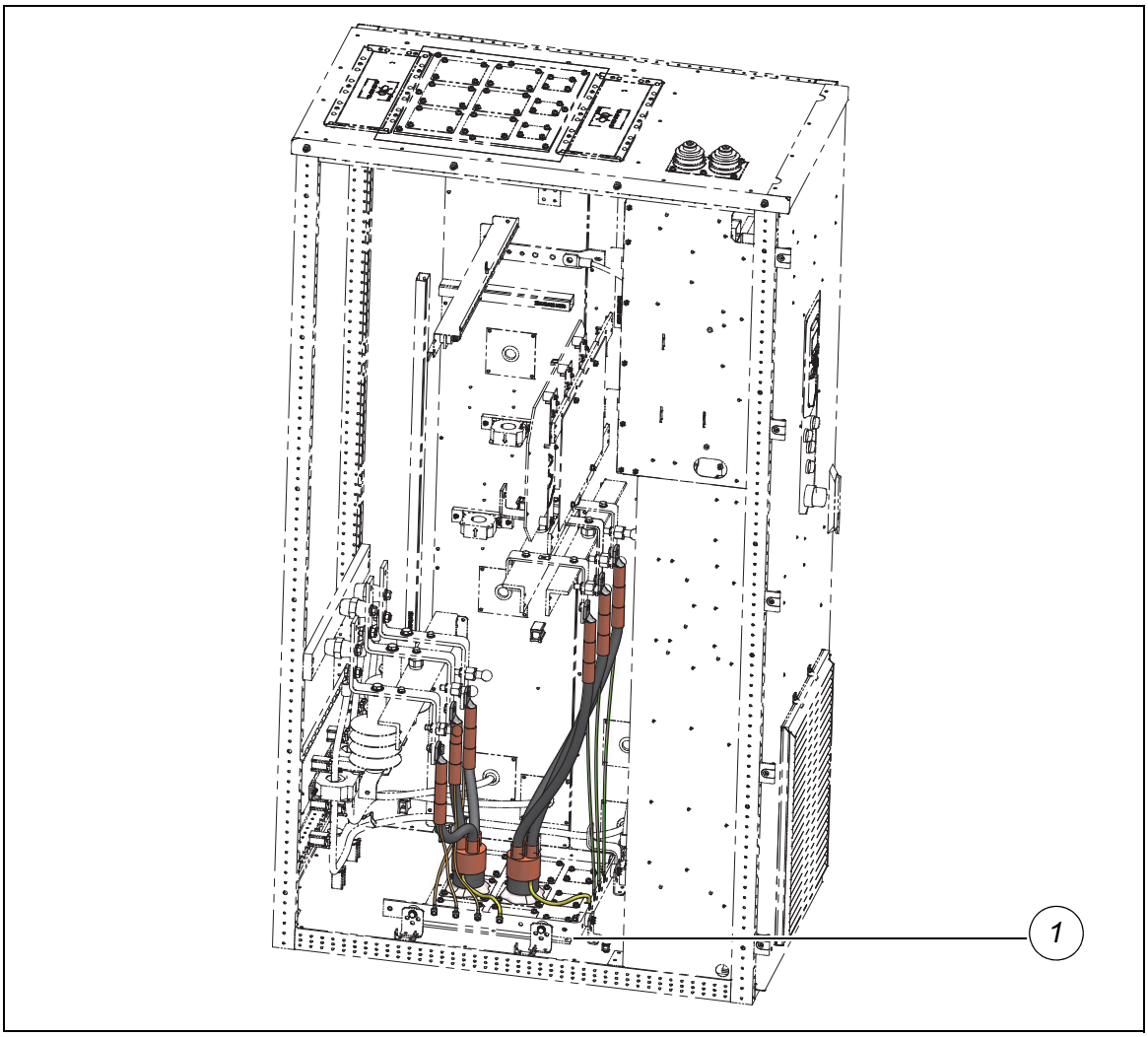

Side view: Power cable entry from bottom ((1) screen extensions to ground)

Checking the cable insulation

- Check the insulation of each cable before connection and verify that the results are within the specification of the cable manufacturer.
- Leave the cables unconnected at both ends until the commissioning personnel has given permission to connect them.

Connections

Connect the cables to their corresponding busbars:

- Feeder cables to busbars U1, V1, W1
- Motor cables to busbars U2, V2, W2
- Screen ends of all conductors and the shields of all cables to the PE ground busbar
- Ground cable to the PE ground busbar

Bolted connections

Material requirements

- Use stainless steel bolts and nuts with the appropriate steel grade and property class for the connection (recommended: A2-70 [designation according to ISO 3506]).

  Nuts with bonded coating can be used as an alternative to uncoated stainless steel nuts.

Connection type

The following connection type is recommended when connecting a cable lug (4) to a busbar:

- Spring washer (1) and flat washer (2) on each side of the busbar (3).

  Other washers can be used, provided they maintain the required contact pressure.

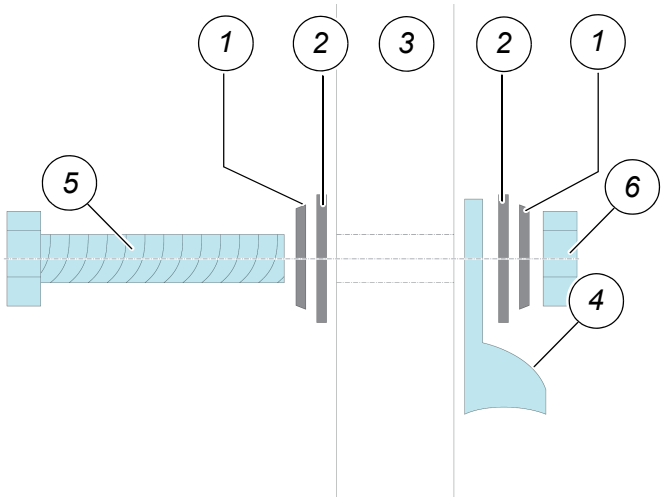

1	Spring washer (2 pcs. per terminal)
2	Flat washers (2 pcs. per terminal)
3	Busbar
4	Cable lug
5	M12 bolt
6	M12 nut

- Use cable lugs suitable for M12 bolts. The required tightening torque is 40 Nm.

Lubrication

- If stainless steel bolts and nuts are used, lubricate the thread and head contact surface of the bolt using recommended pasts, e.g. Molykote D paste.

  Note: If a coated nut (e.g. with bonded molybdenum-disulfide [MoS_2] coating) is used, the connection does not have to be lubricated.

Tightening torque

- Tighten bolted connections with bolts of sizes M10 and greater with the recommended nominal torque for the bolt size used.

Installing auxiliary, control and serial communication cables

Further information

See *ACS580MV Base frame & TEU layout design* for information on:

- Project-specific cable entry
- Dimensions between point of cable entry and terminals

See ACS580MV Wiring Diagram for information on:

- Conventions for cross-references and device identification
- Terminal designations

Preparing the cable entry and the cables

Determining the cable length

1 Determine the required length of a cable between the point of entry and the connection point inside the cabinet.

2 Cut the cable to the required length before connection.

Routing the cables

- Route the cables as illustrated through the provided cable duct to the customer terminals or fieldbus modules in the control compartment.

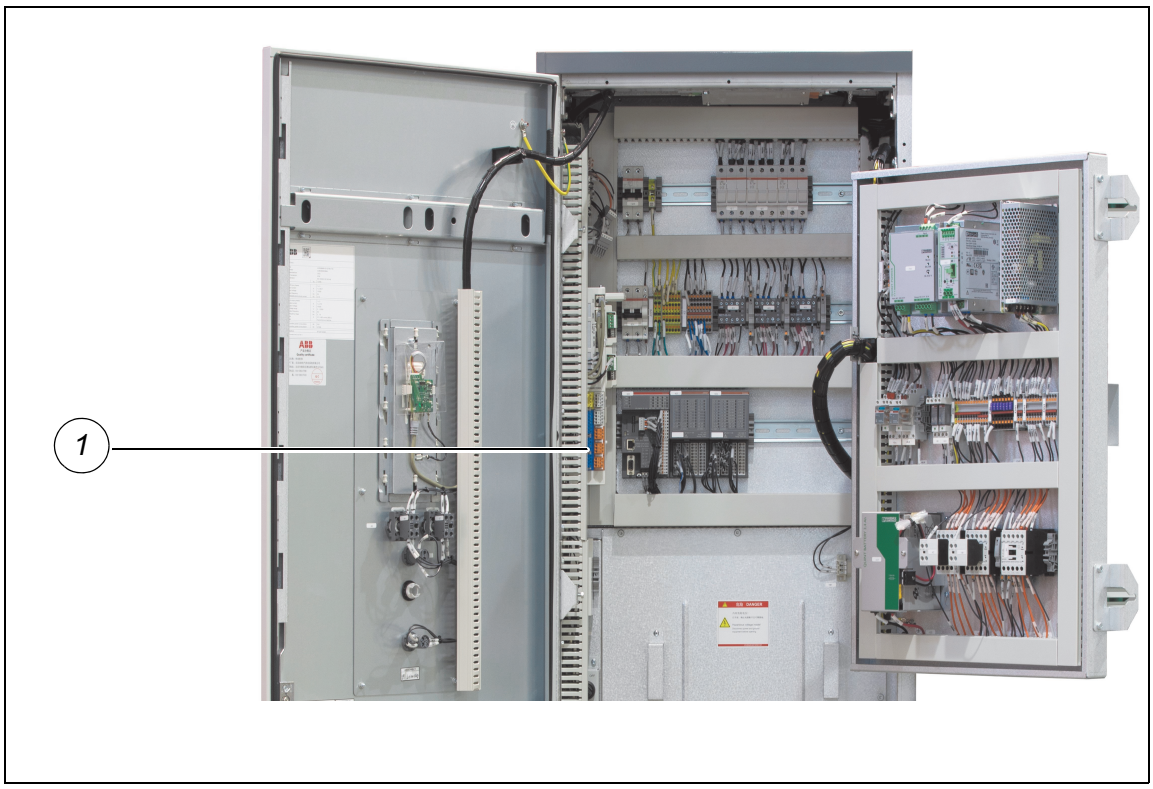

Duct for auxiliary and control cables [40x60]mm

Preparing the cables

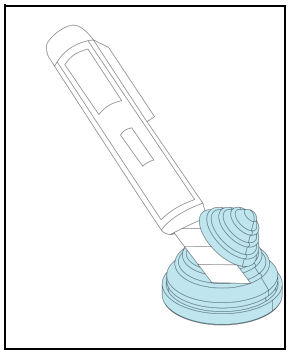

1. Remove the grommets.
2. To ensure proper sealing, cut along the marking that corresponds to the cable diameter. Slide the grommet onto the cable. The grommet must fit tightly to prevent water from entering the cabinet.
3. If necessary, remove the entry plate and pull the cables through the entry holes.
4. Loosen the screws of the EMC cushion brackets and push the cushions apart (arrow).

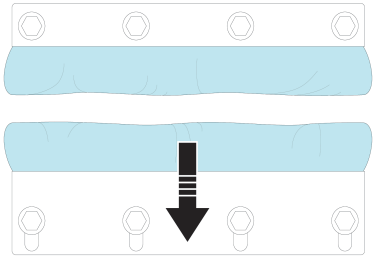

5. Remove the cable insulation at the point of entry (1).

   If the outer cable screen is non-conductive, cut open the cable screen in the middle of the stripped area (1). To turn the conductive side inside out, pull the cable screen ends over the cable insulation (2). Connect the screens ends with a continuous conducting foil (3). Preparing control cables for EMC plates

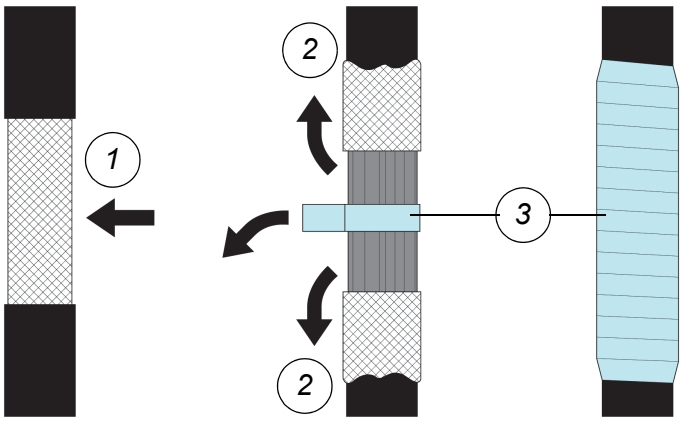

6. Pull the cables through the EMC cushions.
7. Push the cushions together so they fit tightly around the bare screen and tighten the screws.

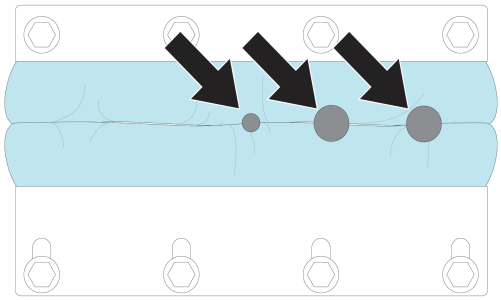

Connecting the cables

- Connect the cables for digital and analog input and output signals to the corresponding terminals / modules.
- If a twisted pair cable is used, leave the unshielded cable ends twisted until they reach the terminals.
- Leave unshielded conductor ends as short as possible (not longer than **50 mm)**.
- Connect the shield of serial communications cables to the PE busbar located near the fieldbus adapter.

Control and power supply cables for fan units

1. Route the control and power supply cables through one of the cable entries located in the floor of the fan unit. Choose either the front or the rear cable entry, according to the position of the fan cable connector.
2. Connect each cable to the appropriate connector.

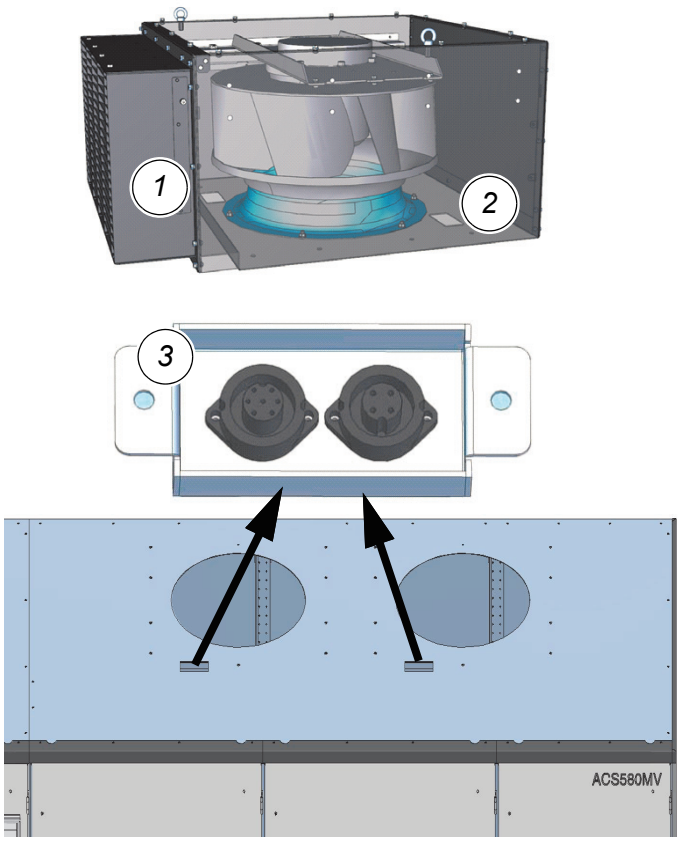

1	Front cable entry
2	Rear cable entry
3	Fan cable connectors

For information on connection details, see ACS580MV Wiring Diagram.

NOTICE

The control and power supply cables are already prepared in the factory for connection.

Note: For 3.3 kV (Power ≤ 710 kW) and 4.16 kV (Power ≤ 870 kW), control and power supply cables connection with fan units and air channel.

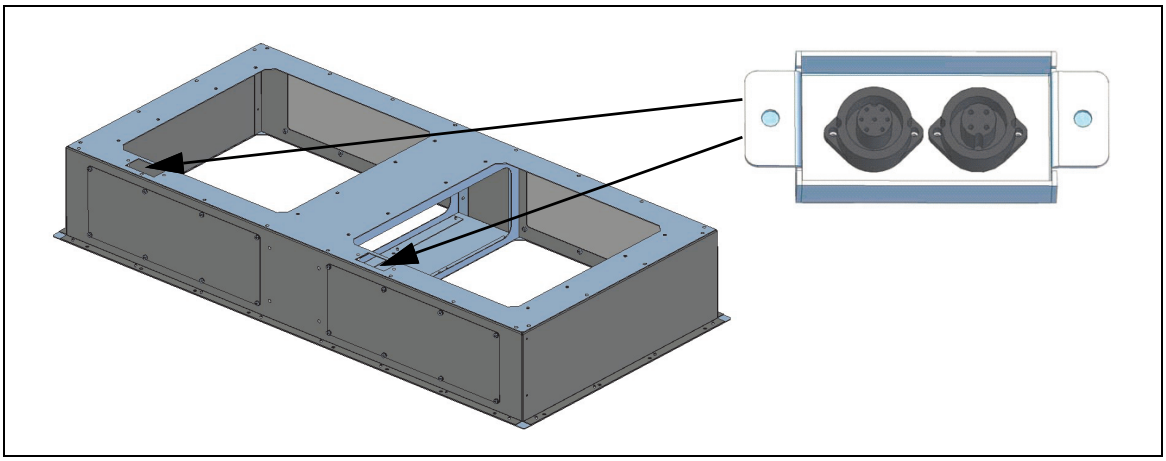

Sealing holes in entry plates

Sealing the gap between cable and entry plate are necessary. Recommend two component sealants.

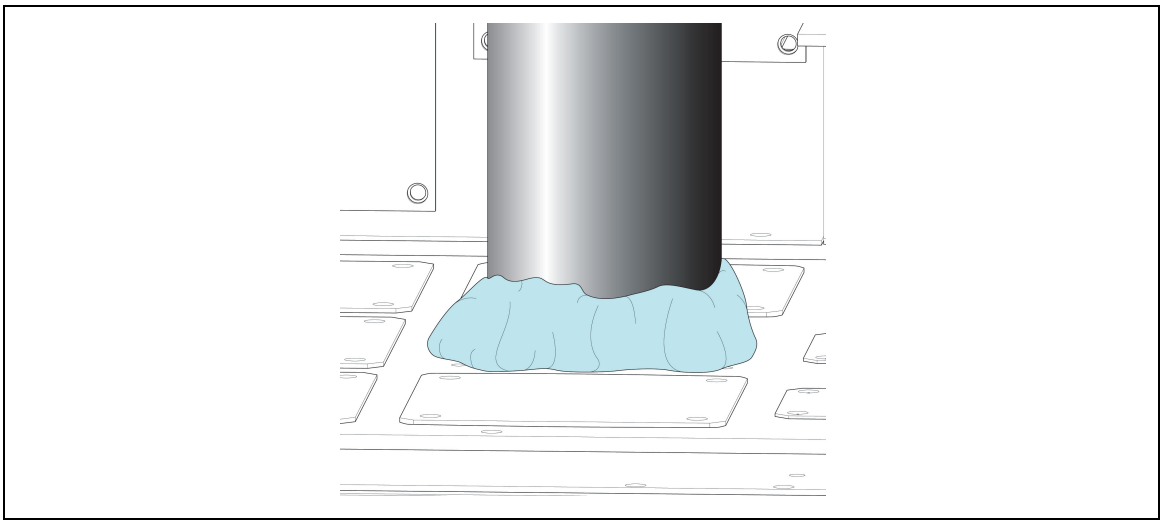

Final checks

Check that the entry plates are properly fastened and cable entries are correctly sealed.

9

Installation checklist

Contents of this chapter

This chapter contains an installation checklist which you must complete before commissioning can take place.

Safety

DANGER

High voltage!

Obey the instructions in chapter *Safety instructions*. If you ignore them, injury or death, or damage to the equipment can occur.

Before starting to work on the drive, make sure:

- that the main and auxiliary power supply to the drive is switched off, locked out, and tagged out
- that the drive is dead
- that safety ground connections are in place
- that personal protective equipment is provided and used when required
- that everyone involved is informed.

Before energizing the drive, make sure:

- that all foreign objects are removed from the drive
- that all internal and external covers are securely fastened and all doors are closed, locked and / or bolted
- that the release dials of safety switches are in the locked position.

WARNING! Obey the instructions in chapter *Safety instructions*. If you ignore them, injury or death, or damage to the equipment can occur.

NOTICE! The field engineer should confirm that the power cables are connected to the correct bus bars before switching on the main power. Once the main power direct reach the output bus bars by wrong connections, the power modules would be irreversible damaged.

Checklist

Do the steps in section *Precautions before electrical work* on page *17* before you start the work. Go through the checklist together with another person.

Mechanical installation

1. The infrastructure of the electric room is finished and the installation site is sufficiently ventilated or cooled and dehumidification to ensure the converter can running at the appropriate temperature and humidity. ☐
2. The wall behind the unit is of non-flammable material. Please take the photo and send back. ☐
3. There is enough free space above the drive to enable cooling air flow, service and maintenance. See layout drawing. Please take the photo and send back. ☐
4. Ambient operating conditions meet the specifications given in chapter *Technical data* ☐
5. Drive installed according to the instructions in this manual (Chapters *Mechanical installation* and *Electrical Installation*) ☐
6. Drive securely fastened to the floor ☐
7. INU cabinet and transformer cabinet have finished combination. ☐
8. The floor that the unit is installed on is of non-flammable material, as smooth as possible, and strong enough to support the weight of the unit. Check the floor flatness with a spirit level. The maximum allowed deviation from the surface level is 5 mm in every 3 meters. Level the installation site, if necessary, as the cabinet is not equipped with adjustable feet. ☐
9. Fan units installed with correct poison and type. ☐

10. Visual inspection:
    no badly affixed or damaged components
    no foreign objects inside cabinet
    no dirt, dust and humidity inside cabinet

Electrical installation

1. Types and cross-sections of control cables suitable for the signal type and signal level
2. Types and cross-sections of power cables selected according to the *ACS580MV Engineering Guideline*
3. Pulse encoder cable screens connected to **screen grounding point** and not connected directly to the pulse encoder interface (only applicable for drives with pulse encoder interface)
4. Internal cabling to integrated transformer (power, auxiliary, control and heater cables) made according to the instructions in this manual (Chapter *Electrical Installation*)
5. Cable entry made according to the instructions in this manual (Chapter *Electrical Installation*)
6. All control cable screens and conductors are connected according to the instructions in this manual (Chapter *Electrical Installation*), appropriately labeled, and the customer-side connections are completed
7. Heating cable (if supplied) installed according to the instructions in this manual (Chapter *Electrical Installation*)
8. Ground cable of drive securely connected at both ends
9. Input and motor cables not connected at both ends (cables must be meggered before connection, drive optional - recommended in case of long storage time, humid environment or visible transportation damages)

Door interlocking

1. Door locks tested and in operation
2. The manual release of the door safety switch(es) is in the **locked** position.

Main circuit breaker (MCB)

1. Type of MCB selected as per *ACS580MV Engineering Guideline*

2. High voltage connections completed ☐

3. MCB ready to be tested with drive ☐

4. MCB interposing relay settings tested ☐

5. Local close order is disabled, and the connection to switch or button is canceled. ☐

6. The wiring of the control & signal cables connecting with the converter is finished. ☐

7. Safety devices checked and in operation ☐

8. The user manual and technical specification is available. ☐

9. Withstand voltage test of the MCB have been done according to Manufacture`s specifications. The official test report must be available. ☐

Motor

1. Motor installed, aligned and alignment protocol available ☐

2. Motor decoupled from driven load ☐

3. Ground connection completed ☐

4. Customer side motor protection set and ready (e.g. winding temperature, vibration) ☐

5. Motor auxiliaries (e.g. bearing lubrication, heater cooling) ready ☐

6. The user manual and technical specification is available. ☐

Power cables

1. All cable screens are connected. Please take the photo and send back. ☐

2. Grounding cables of transformer, converter and motor are connected and tighten. ☐

3. Types and cross sections of power cables are selected according to the “ABB power cable specification”. Type of cable_____. ☐

4. Transformer and motor cables are not fastened at both ends (cables and converter must be meggered before connection). ☐

Insulation tests

1. All power cables to drive, and from drive to motor are meggered, and measured values are within the required limits. ☐

2. Test report of the megger test available ☐

   Note: If the test is carried out by the commissioning engineer of the drive, an additional day per drive motor combination needs to be reserved. After the test, the feeder cables can be connected, except at the drive end. The test must comply with the specification.

3. Optional insulation tests of the drive are completed and documented. Insulation tests of the drive recommended in case: long storage time (>4 months), humid environment or visible damages due to transportation/installation. ☐

Power supply

1. Medium voltage available for start-up of drive ☐

2. Low voltage auxiliary power available for start-up of drive ☐

Miscellaneous

1. Sufficient number and correct type of spare parts available ☐

2. Cooling of drive room ready for load run of drive ☐

3. Optional equipment ready ☐

4. Drive room properly dust filtered (dust filters at air inlet), see *ACS580MV Engineering Guideline* ☐

10

Operation

Contents of this chapter

This chapter contains the start-up procedure of the drive. The default device designations (if any) are given in brackets after the name, for example “main switch-disconnector (Q1)”. The same device designations are also used in the ACS580MV Wiring Diagram typically.

Operating conditions

The operating conditions for the drive are according to IEC 60721-3-3 ’Stationary use at weather-protected locations’ (unless indicated otherwise).For details see *Technical data*.

Safety

The drive must only be operated by qualified and authorized personnel, i.e. personnel who are familiar with the operation of the drive and the hazards involved.

Overview

The chapter outlines the local operation of the drive. For additional details on using the local control panel see User’s Manual “*ACS-AP-X assistant control panels user’s manual* ”.

Control of the drive via a PLC or a higher-level control system is not described in this chapter. If the drive is controlled from remote, see the appropriate manuals for information.

The panel messages and parameter settings used in this chapter are typical examples to illustrate the related instructions and display functions and may therefore differ from the actual messages and parameter settings in the drive.

Overview on drive status and sequences

The following section lists the main operating states of the drive and the related indications on the local control panel when the drive is put into operation (see *Start sequence of the drive*), when it is stopped (see *Stop sequence of the drive*), or when a fault condition has occurred.

For information on other status messages, such as fault status messages in particular, see the *ACS580MV primary control program firmware manual*.

Status indications

The drive status is indicated with a status icon on the control panel.

Status icon	Animation	Drive status
	-	Stopped
	-	Stopped, start inhibited
	Blinking	Stopped, start command given but start inhibited
	Blinking	Faulted
	Flashing	Running, at reference, but the reference value is 0
	Rotating	Running, not at reference
	Rotating	Running, at reference

Start sequence of the drive

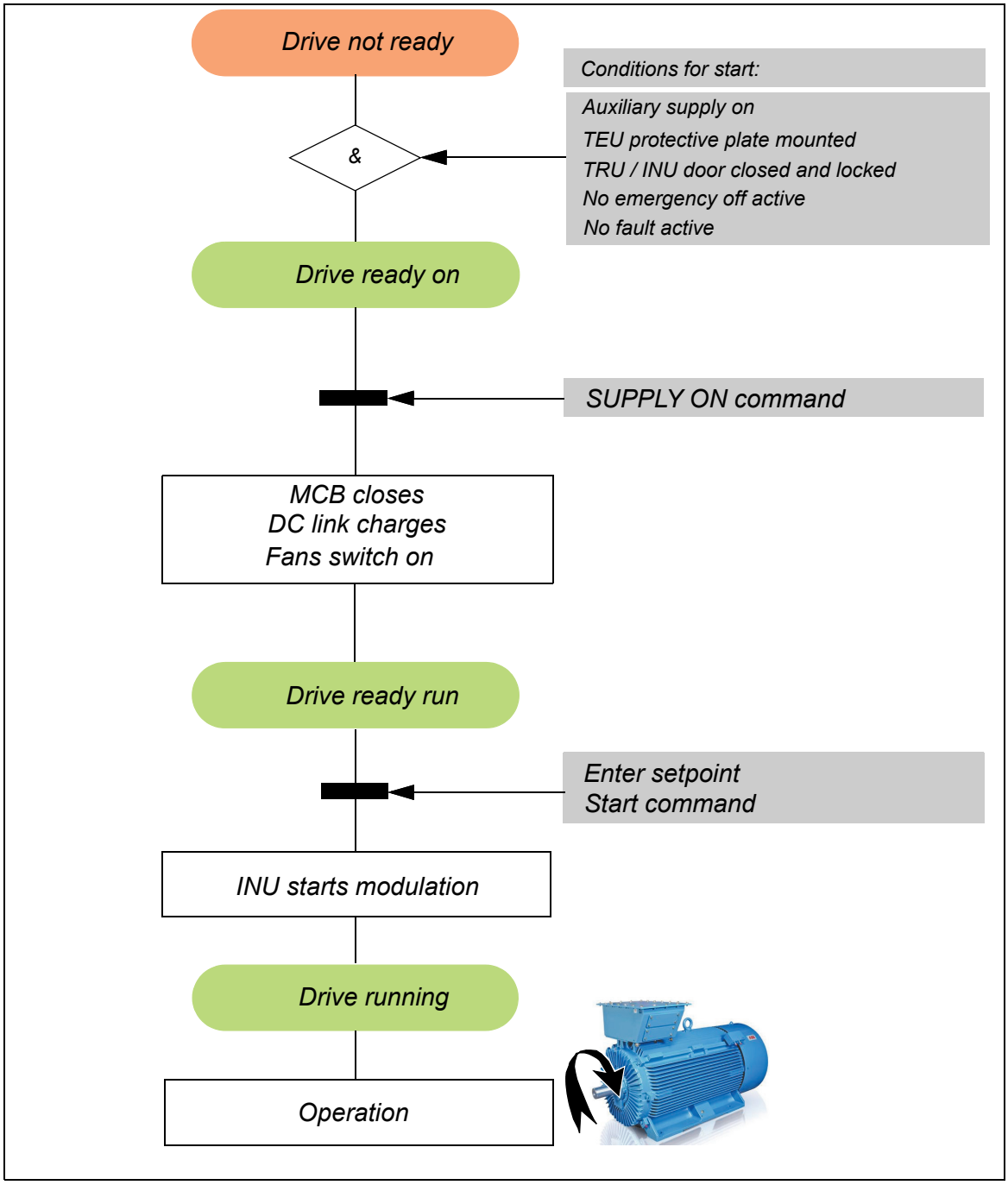

Stop sequence of the drive

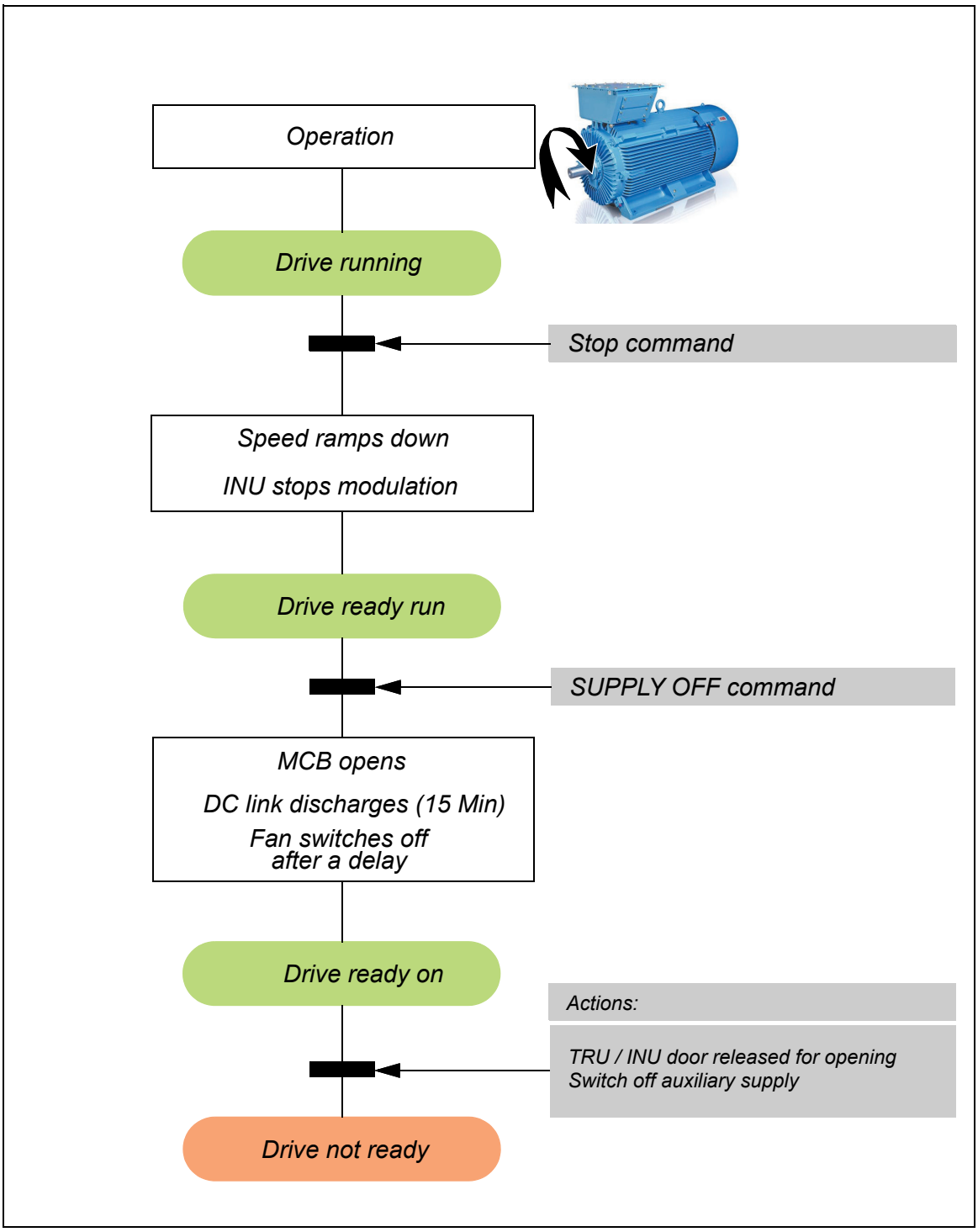

Emergency off sequence

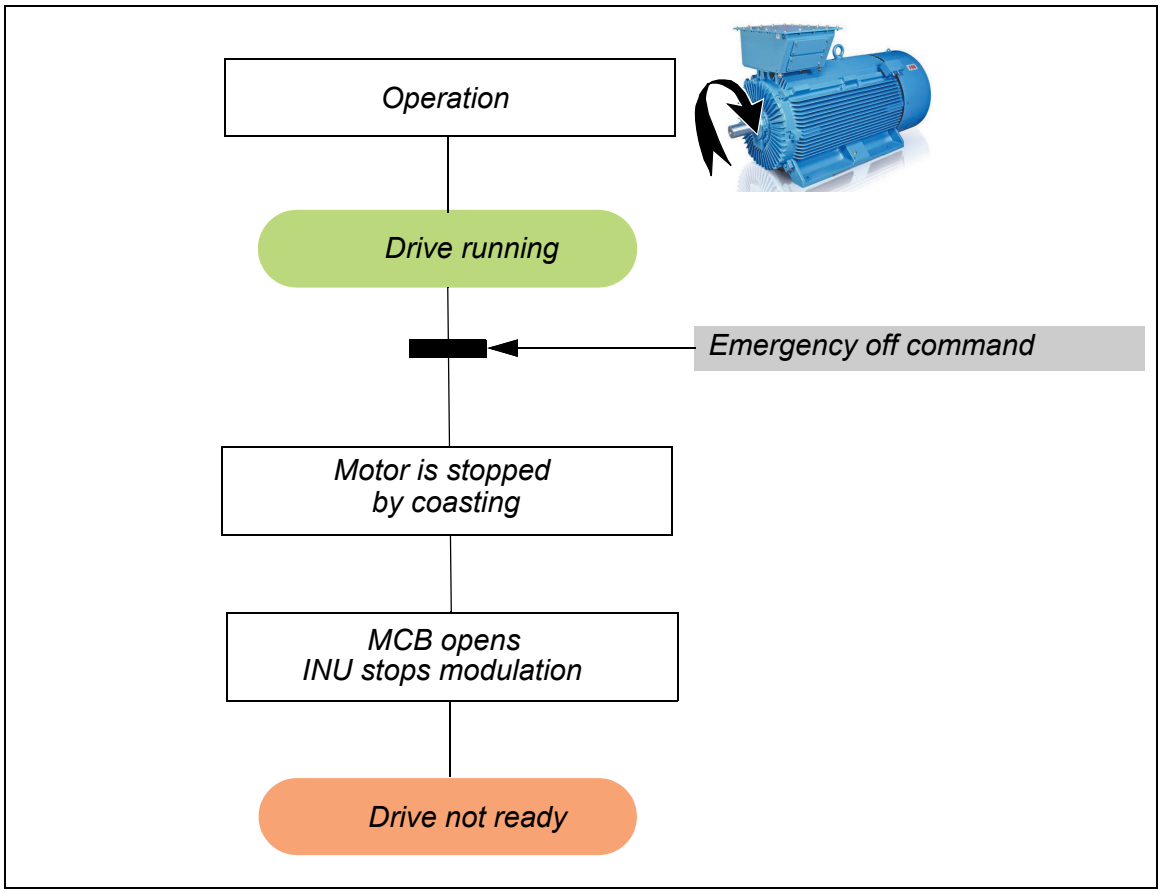

Energizing and starting the drive

It is recommended to have the following documents at hand when starting the drive locally for the first time after commissioning:

- ACS580MV Wiring Diagram to identify the circuit breakers
- User's Manual "*ACS-AP-X assistant control panels user's manual*".

Checks before starting the drive

DANGER

Hazardous voltages!

All covers must be screwed in place to prevent unintentional contact with energized components.

The manual release of the door safety switches must be in the locked position. The locked position prevents doors of medium voltage compartments being opened unintentionally during operation.

When the drive is put into service after it has been commissioned, or after it has been taken out of service for maintenance or troubleshooting, check the drive according to the following list:

- Check that no tools and foreign objects are left inside the cabinets.
- Check that all auxiliary power supplies from external sources are switched on.
- Check that all internal circuit breakers of the drive are closed.
- Check that all grounding devices are removed
- Check that all covers are mounted and the doors are closed, locked and / or bolted.
- Check that the MCB is in **operating** position.
- Check that there is no run interlock active.

Starting the drive from remote

When the drive is operated from remote through a higher-level control system or an operator control desk, follow the instructions in the appropriate manuals.

Starting the drive locally

1. Enable the local control mode of the control panel by pressing the **Loc/Rem** key (1).

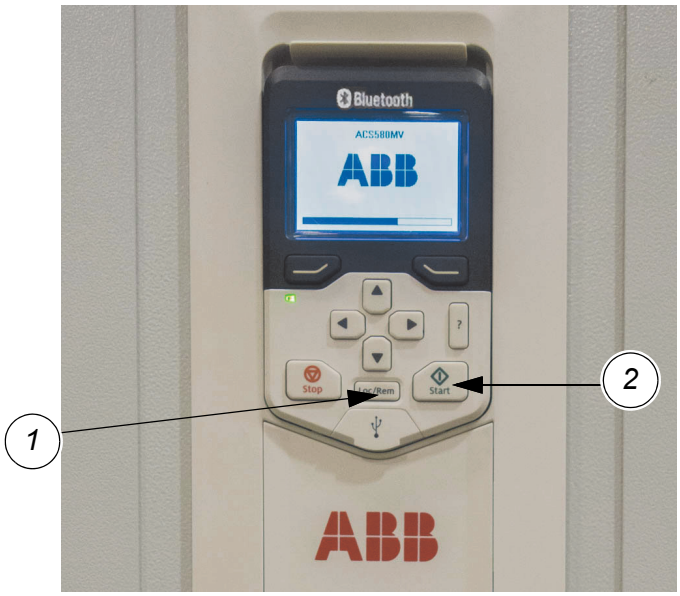

The drive is in state **Stopped** and the display shows .

2. Press the **SUPPLY ON** pushbutton to connect the drive to the main power supply. The following takes place:
   - The MCB closes.
   - The DC link charges.

   While the DC link charges, the **SUPPLY ON** pushbutton flashes. As soon as the DC link is charged, the **SUPPLY ON** pushbutton changes to a permanent light.

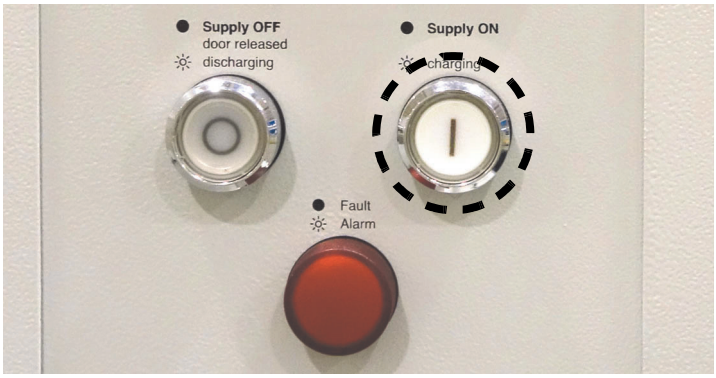

3. Enter the setpoint. See "*ACS-AP-X assistant control panels user's manual*".
4. Press the **Start** key (2) to start the motor.

   After the motor has been magnetized, the motor speed ramps up to the setpoint.

While the motor is accelerating, the run status indication on the display blinks. When the motor speed has reached the setpoint, the run status indication lights up permanently.

Stopping the drive

This section describes how to stop the drive using the local operator panel of the drive. If the drive is remotely-controlled, follow the established shutdown procedures.

For details on using the local control panel see "*ACS-AP-X assistant control panels user's manual*".

1. Enable the local control mode of the control panel by pressing the **Loc/Rem** key (1).

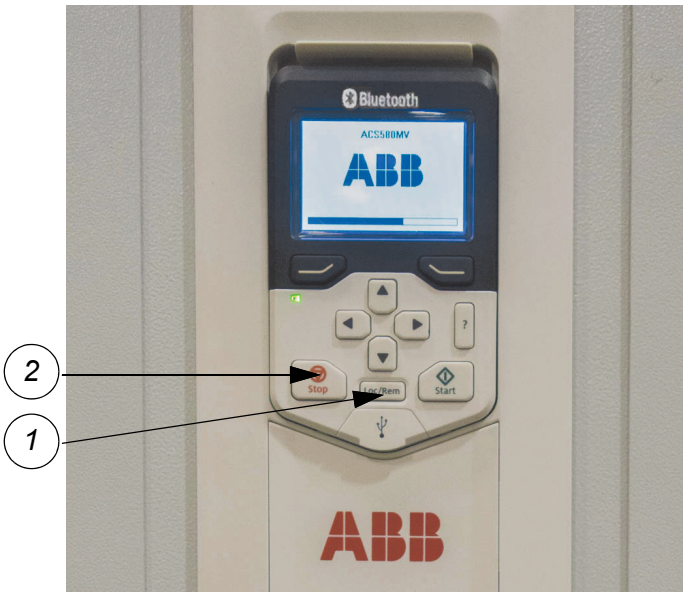

2. Press the **Stop** key (2).

   The motor stops according to the preset stop function and the drive stops modulating. When the motor has reached zero speed, the drive is in state **Stopped** and the display shows .

DANGER

Hazardous voltages!

The ACS580MV is not de-energized in the state **Stopped**. Before doors are opened / removed or work is begun on the drive, the system must first be de-energized (see Chapter *Maintenance*, *Shutting down the drive for maintenance*).

11

Fault tracing

Contents of this chapter

This chapter describes the fault tracing possibilities of the drive.

Alarm and fault indications

When a failure occurs in the drive or in the equipment monitored by the drive, the control panel displays a corresponding alarm or fault message and the red Fault / Alarm button on the control compartment door lights up:

- Alarm: flashing light
- Fault: permanent light

Button / Light	Fault/Alarm
Color	Red
Status	Off
	Flashing
	on
Meaning	Normal operation
	Alarm pending
	Drive in fault state

Warning and fault messages

In case of an alarm or fault refer to the *ACS580MV primary control program firmware manual* for the descriptions, causes and remedies of the drive control program warning and fault messages.

Diagnosis data and parameter backup

See User's manual "Start-up and maintenance PC tool Drive composer"

12

Maintenance

Contents of this chapter

This chapter contains instructions for preventive maintenance and component replacements and the *Maintenance schedule* with recommended maintenance intervals.

Safety

DANGER

High voltage!

Obey the instructions in chapter *Safety instructions*. If you ignore them, injury or death, or damage to the equipment can occur.

Before starting to work on the drive, make sure:

- that the main and auxiliary power supply to the drive is switched off, locked out, and tagged out
- that the drive is dead
- that safety ground connections are in place
- that personal protective equipment is provided and used when required
- that everyone involved is informed.

Before energizing the drive, make sure:

- that all foreign objects are removed from the drive
- that all internal and external covers are securely fastened and all doors are closed, locked and / or bolted
- that the release dials of safety switches are in the locked position.

NOTICE

Foreign matter and particularly metallic dust can cause failure and damage when the drive is energized.

Ensure that foreign matter cannot enter the cabinet:

- Close the doors and cover openings completely when the work is discontinued.
- Retrieve any foreign matter accidentally dropped into the cabinet.

NOTICE

All maintenance tasks that are listed in the maintenance schedule, but are not described in detail in this manual, may only be carried out by ABB.

Call ABB service if such a task is due.

Preparation for maintenance work

Documentation and reporting of maintenance work

It is recommended to record all troubleshooting and maintenance work in a logbook including:

- Date and time
- Detailed description

Required tools and equipment

Standard set of tools. If special tools are needed for a maintenance task, a specific list is provided.

Use only instrumentation (e.g. meters, oscilloscopes, etc.) intended for high voltage measurements (that is, isolation is provided inside the instrument, not provided by isolating the chassis ground of the instrument). Never defeat the instrument's grounding.

Storage and handling of spare parts

To ensure safe and reliable operation, it is important to use only spare parts recommended and approved by ABB.

For information on types and identification codes, see the spare part kits or contact ABB service organization.

Software and hardware updates information in MoR

Check preventive updates information in MoR, prepare appropriate documentation and required material.

For information which is beyond of update instruction, contact ABB service organization.

Shutting down the drive for maintenance

See Chapter *Operation, Stopping the drive* for instructions on de-energizing the drive using the local operator panel of the drive. If the drive is remotely-controlled, follow the established shutdown procedures.

For details on using the local control panel, see User's Manual "*ACS-AP-X assistant control panels user's manual* ".

DANGER

Hazardous voltages!

For work in the medium voltage circuit of the drive the connection of grounding equipment at the appropriate locations is a must. The grounding equipment ensures that hazardous voltages cannot be fed into the drive neither from the main power supply nor the motor.

De-energizing the drive

1. Stop the drive following the instructions in Chapter *Operation, Stopping the drive*.
2. Set the local control panel to local control mode by pressing the **Loc/Rem** key (1)

3. Press the **SUPPLY OFF** pushbutton to disconnect the drive from the main power supply. The following takes place:
   - The MCB opens.
   - The DC link discharges.

   While the DC link discharges, the **SUPPLY OFF** pushbutton flashes.

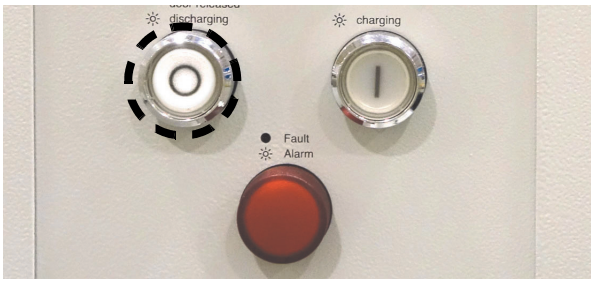

- Wait 15 minutes until the DC link capacitors have discharged completely (the delay time is triggered when the main power feeder is disconnected).

  After the DC link capacitors have discharged completely, the cabinet doors of the power compartments unlock, the **SUPPLY OFF** pushbutton changes to a permanent light and the status line displays .

4. Rack-out, lock-out, ground and tag-out the main power feeder.
5. Switch off and lock-out all auxiliary voltages from external sources.
6. Verify that the drive system is de-energized.
7. To connect a grounding set, continue with *Connecting a grounding set* on page *111*.
8. To open the door of the medium voltage compartment, continue with *Unlocking and locking the doors* on page *110*.

   Tip: To open the power compartment doors, auxiliary voltage is required.
9. Before start working in the power compartment, the power modules must be individually grounded by touching them with the grounding stick. See *Grounding power module enclosure and busbar with grounding hook* on page *112*.

Unlocking and locking the doors

The door is secured by a safety switch and the control compartment door has pivoted door handles and locks with triangular inserts. Open the door with the supplied key.

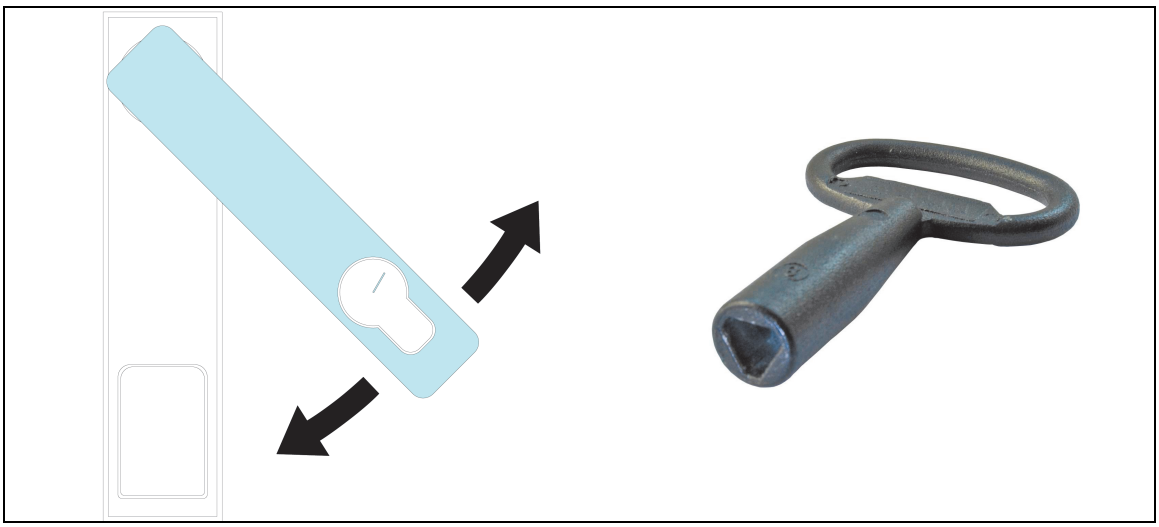

1. To release the door handle, insert and turn the key to the right. The door handle will pop out.
2. To open the door, turn the door handle
   - to the right, if the door is hinged on the right,
   - to the left, if the door is hinged on the left.
3. To lock the door, bring the door handle in line with the door plate and press the handle down until it clicks in.
4. Before manually release the door lock, make sure that the lock handle is back to the original position (in vertical direction).

Connecting a grounding set

Before starting to work on the drive, you must ground the three input and three output terminals in the terminal unit (TEU). Always ground the drive on both sides, i.e. on supply and motor side. Grounding on motor side is needed to avoid induced voltage from a spinning rotor.

For this purpose, two grounding harnesses are needed. They can be ordered separately as an optional grounding harness set (consisting of two grounding harnesses plus a telescopic insulating pole) for the 3-phase power input.

Notice: To adapt grounding harness ordered from ABB, ball type grounding studs are provided as option.

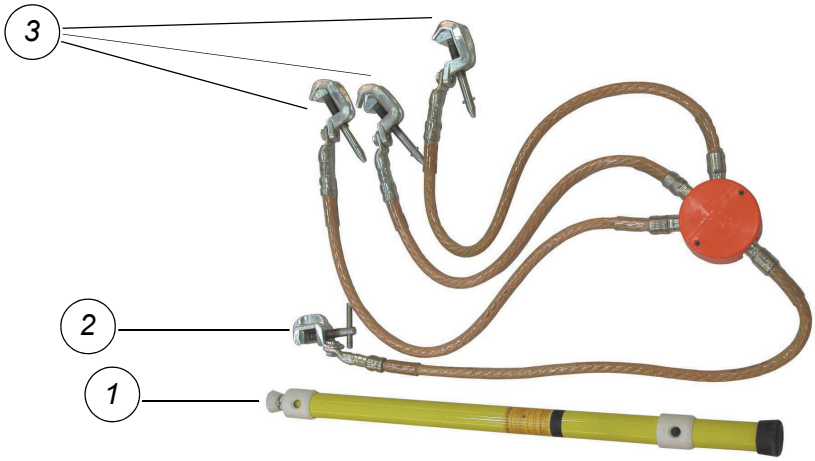

1	Telescopic insulating pole
2	Enclosure ground clamp
3	Busbar ground clamp

Example for grounding harness

1. Open the COU door.
2. Connect the enclosure grounding clamp (item 2 in the figure above) to the cabinet's PE busbar.
3. Remove the protective plate between COU and TEU.

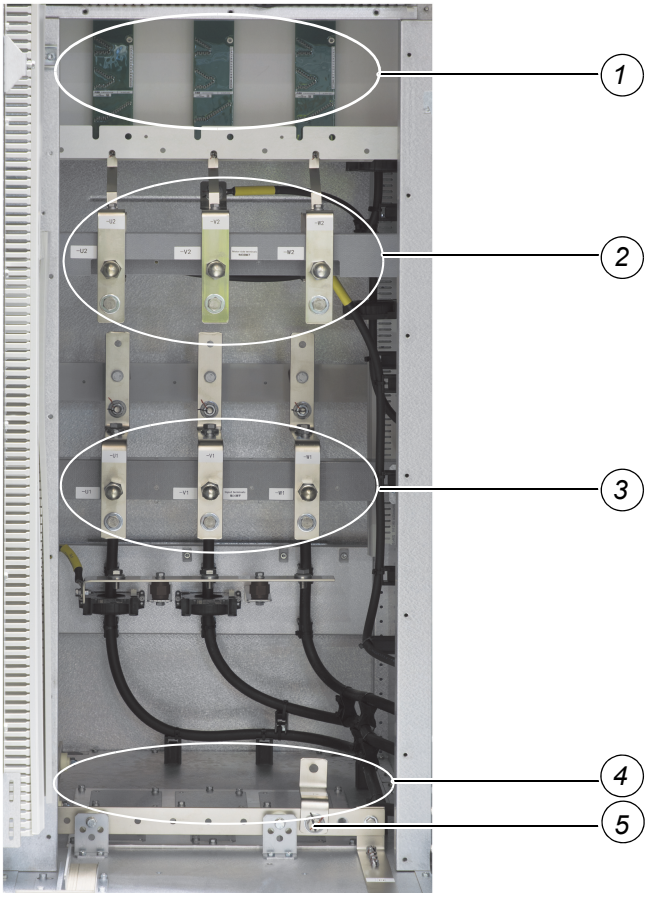

1	Voltage dividers
2	Motor side terminals
3	Input terminals
4	Cable entry plate
5	Cabinet grounding busbar

Terminal compartment with cover plate removed

4. Use the telescopic insulating pole to connect the busbar grounding clamps to the busbars in the Terminal Unit, and to tighten each connection.

Grounding power module enclosure and busbar with grounding hook

Since the power modules are on a floating potential, make sure there is no residual voltages on the module terminals before starting work on the modules.

Required tools

- Voltmeter or multimeter with impedance of >=10 Mohm (not part of supply)
- Voltage divider probe (not part of supply)
- Grounding hook (part of supply)

The grounding hook is attached to the left side wall inside the COU cabinet. The other end of the PE cable is fixed to the PE busbar (see the figure below). The length of the PE cable is 4.5 m or 6 m, depending on the drive type.

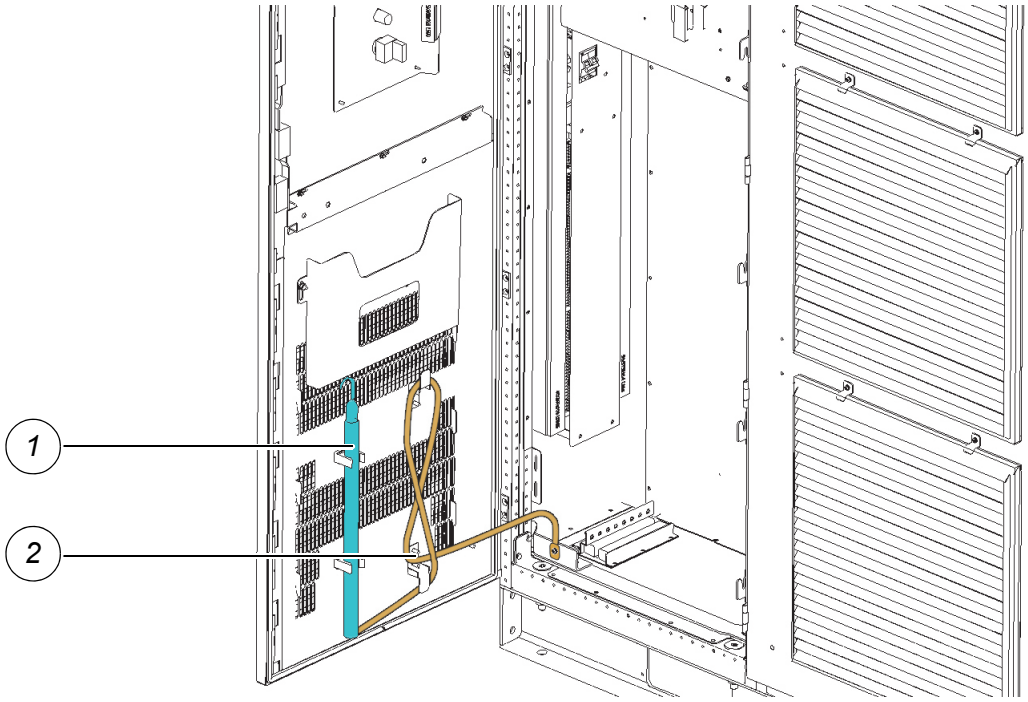

1	Grounding hook
2	Grounding cable connected to PE busbar

Grounding hook in stowed position

Procedure:

1. Please make sure that the three input and three output terminals in the terminal unit (TEU) are grounded. Always ground the drive on both sides.
2. Open the INU door.
3. Connect the voltage divider probe to the volt-/multimeter and select the appropriate metering range (see the instruction manuals of the devices).
4. Connect the grounding clip of the voltage divider probe to the cabinet (PE busbar, see the instruction manual of the probe).
5. Touch all the input and output terminals of each power module with the contact electrode of the probe and check that the voltage is below 50 V.
6. Touch all the input and output terminals of each power module with the contact tip of the grounding hook.
7. Hang the grounding hook to the terminal of the power module to be serviced and leave it there until work on the module is finished.
8. Make sure again that all power module terminal voltages are below 50 V. Use a multimeter and measure the voltage between the grounded power terminal and all other power module terminals before working on the power module.

Starting the drive after maintenance

See Chapter *Operation, Energizing and starting the drive* for instructions on energizing the drive using the local operator panel of the drive. If the drive is remotely-controlled, follow the established start-up procedures.

Emergency release of the door safety switch

DANGER

Hazardous voltages!

Touching energized components can be fatal.

Before you unlock the safety switch, verify that the drive is de-energized.

Do not unlock the safety switch permanently.

The door of the INU compartment is secured by a safety switch (item 1 in figure below).

Location of door safety switch

The safety switch is tied into the door interlocking circuit of the drive and the interlocks from the main circuit breaker of the drive. The interlocking system ensures that:

- the main power can only be connected to the drive if the door is securely closed and the safety switch is in the **locked** position.
- the door can only be opened if the main circuit breaker is open and the DC link is discharged.

Also, the door of the INU compartment can not be opened

- if the drive is disconnected from the auxiliary power
- if the safety switch of the door is in the **locked** position.

If the auxiliary voltage is switched off and the door is locked but cannot be opened, check the position of the release dial of the safety switch. If the release dial is in the locked position, unlock the safety switch as described in *Safety-switch settings* on page *115*.

Safety-switch settings

There’re two kinds of safety switches as follows,

Safety-switch setting 1

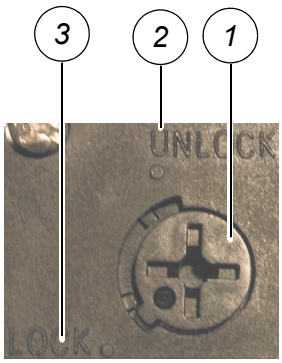

1	Release dial
2	Unlocked position The unlocked position enables opening the door of a medium voltage unit whether the auxiliary voltage is switched on or off.
3	Locked position Locked is the normal operating setting. To open the door of a medium voltage unit, the DC link must be discharged and the auxiliary voltage must be switched on.

Unlocking

1. To access the release dial of the safety switch, remove the cap in the top right corner of the INU compartment door.
2. Turn the release dial from the locked to the unlocked position.

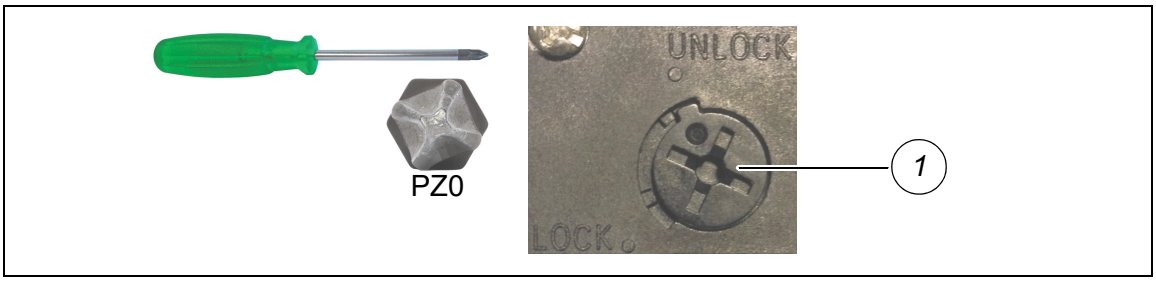

3. When the door is open, turn the release dial to the locked position.
4. Insert the cap again.

Safety-switch setting 2

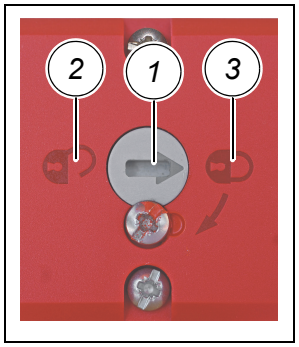

1	Release dial
2	Unlocked position The unlocked position enables opening the door of a medium voltage unit whether the auxiliary voltage is switched on or off.
3	Locked position Locked is the normal operating setting. To open the door of a medium voltage unit, the DC link must be discharged and the auxiliary voltage must be switched on.

Unlocking

1. To access the release dial of the safety switch, remove the cap in the top right corner of the INU compartment door.
2. Screw out the locking screw (1) until the release dial can be turned.

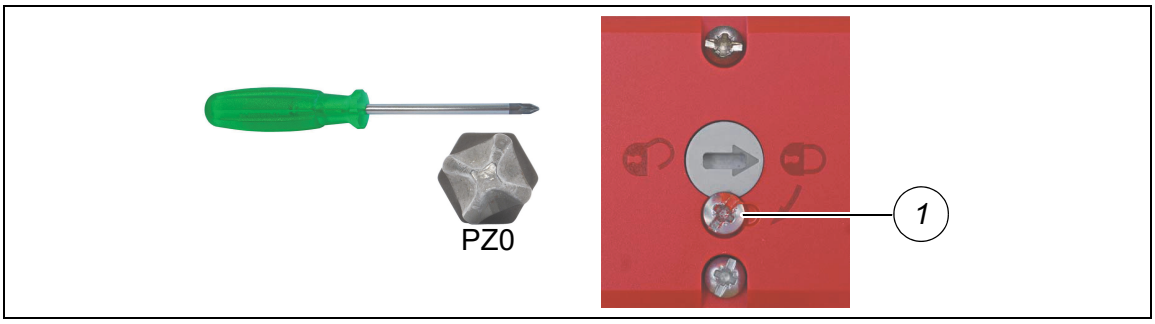

3. Turn the release dial from the locked to the unlocked position.

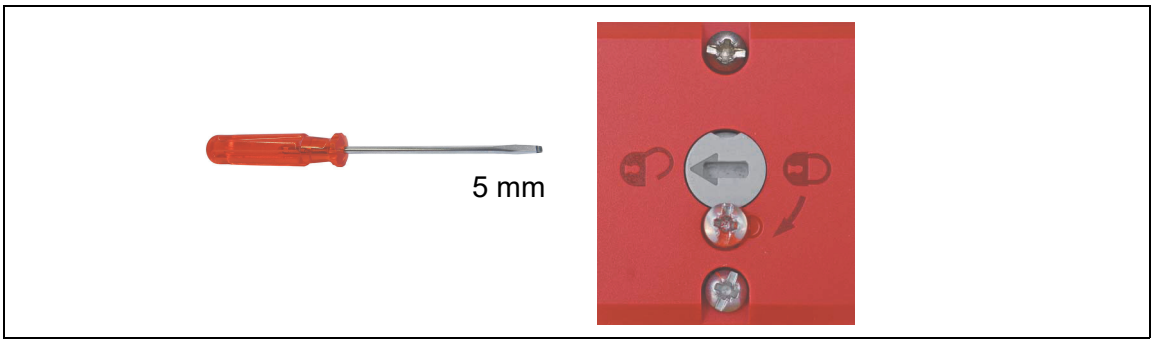

4. When the door is open, turn the release dial to the locked position and screw in the locking screw.
5. Insert the cap again.

Visual checks and cleaning

WARNING! Obey the instruction in chapter *Safety instructions*. If you ignore them, injury or death, or damage to the equipment can occur.

1. Stop, de-energize and ground the drive following the steps in section *Shutting down the drive for maintenance* on page *109* before you start the work.
2. Check the drive and its immediate vicinity visually at the intervals stated in the maintenance schedule and pay attention to the following items:
   - Air temperature and humidity inside the drive room
   - Permitted range of ambient air temperature and humidity of the drive
   - Dust built-up inside the drive room and inside the drive
   - Signs for overheated components, wires, cables or busbars, for example, connections of transformer primary side
   - Corrosion on circuit boards, connectors or busbars
3. When cleaning the drive, mind the following:
   - Do not use alcohol or solvents
   - To prevent dirt or dust from falling into surrounding equipment and assemblies, cover them before you start cleaning
   - To clean components that are sensitive to electrostatic discharge, take electrostatic-sensitive precautions and use suitable tools. For example, to

clean circuit boards, use a soft antistatic brush or an antistatic vacuum cleaner with a soft nozzle

- To remove dirt or dust from insensitive surfaces, use compressed air, a vacuum cleaner or a lint-free cloth
- To remove water and oily or greasy deposits from assemblies, components, busbars and such, use water- and oil-absorbing microfibers.

4. Check the air inlet filters of the cabinet. Clean when necessary.
5. When necessary, replace components, wires, or busbars with overheating or corrosion.

Replacing the door air filters

Inspect filter mat condition, replace if necessary. Replace filter mat regularly according to PM schedule. see *ACS580MV Preventive Maintenance Schedule*. *ABB also provide air filter cassette as option for higher level protection.*

Note: It is not allowed to replace air filter during drive operation !

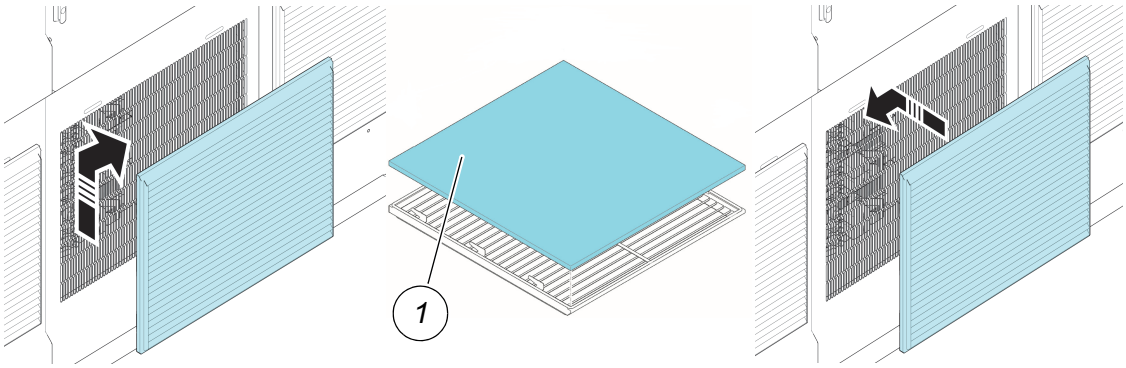

1	Filter

1. Unscrew and remove the fixed part of ventilation cover.
2. Lift the grating and pull it away from the door.
3. Remove the air filter.
4. Place the new filter into the grating.
5. Reinstall the filter and grating in reverse order.

Cable connects, bolted connections

1. Inspect power cables and earthing cables, including earthing in doors:
   - Insolate with different voltage potential.
   - Appropriate fastening of cables and wires and connections of cable shields and screens.
   - Integrity of cable insulation. The outer cable sheath must not be damaged.
2. Inspect control cables:
   - Check the connections of control cable and relays.
   - If necessary, tighten the screws.
   - Replace damaged or wobbling connectors.
3. Inspect bolted connections:

   Pay more attention to following current-carrying connections:
   - Terminals of mains and motor cables.
   - Terminals of transformer primary and secondary side.
   - Busbar fastening bolts in the INU (on and between PEBBs).
   - Ground busbar joints.

   Check bolted connections are tightened with the nominal torque for the bolt size used:

Bolt size	Bolt type	Tightening torque (Nm)
M3	Copper	0.8
M4	Steel/ Stainless steel	2
	Copper	1.2
M5	Steel/ Stainless steel	3
	Copper	2
M6	Steel/ Stainless steel	5.5
	Copper	3
M8	Steel/ Stainless steel	10 (aluminum busbar)/ 15(copper busbar)
	Copper	6
M10	Steel/ Stainless steel	20 (aluminum busbar)/ 30(copper busbar)
	Copper	10
M12	Steel/ Stainless steel	30 (aluminum busbar)/ 40(copper busbar)
	Copper	15.5
M16	Steel/ Stainless steel	90 (aluminum busbar)/ 120(copper busbar)
	Copper	30

M20	Steel/ Stainless steel	120 (aluminum busbar)/ 160(copper busbar)
	Copper	52

If a bolted connection must be renewed, see section *Electrical Installation* for bolt selection and connection method.

NOTICE! Inappropriate connection method could lead to overheating or mechanical damage.

Spare parts

Spare power module reforming

Reform DC-link capacitors in spare power modules If the stock age more than 1 year, following chapter *Reforming capacitor of power modules*.

Software update in spare parts

Software in below spare parts should be checked and updated to same software version as drive:

- BCU
- Control panel
- CVMI board
- IO controller
- Control hub
- HMI panel

Auxiliary voltage verification

Protective settings

Check the settings of protective devices by following document *Settings of protective devices* which attached in *ACS580MV ROUTINE TEST REPORT [2UBB011997 E01]* or contact ABB service organization for this information.

Voltage measurement

WARNING! Obey the instruction in chapter *Safety instructions*. If you ignore them, injury or death, or damage to the equipment can occur.

NOTICE! This test is only possible to preform after energizing and starting the drive, please follow instructions in section *Starting the drive after maintenance*.

Check the configuration of drive and measure following voltage level:

1. External 3 phase supply for fan supply
   - 380...415 VAC (for AC fans)
   - 380...480 VAC (for EC fans)
2. External single phase supply for control supply
   - 100...240 VAC or 90...350 VDC
3. 24VDC distribution
   - 23.0...25.0 VDC
4. External single phase supply for cabinet heater power supply
   - 220...240 VAC
5. External single phase supply for motor space heater power supply
   - 220...240 VAC

UPS battery refresh charge

If the drive is equipped with the optional UPS battery, refresh charge required.

When it is unavoidable to store the battery for 3 months or longer, periodically recharge the battery fully with auxiliary power on at the intervals recommended in the table below depending on ambient temperature. Avoid storing the battery for more than 12 months.

Storage temperature	Interval of auxiliary charge (refresh charge)
Below 20°C	12 months
20°C to 30°C	9 months
30°C to 40°C	6 months

Note:

1. Please follow *ACS580MV Preventive Maintenance Schedule* for maintain and replace.
2. To obtain maximum life, batteries should never be stored in discharged status.

Testing main power supply circuit

The main power supply circuit must be tested regularly according to the preventive maintenance interval table. The tests consist of the actuation and checking of proper

reaction of

- Safety circuit
- MCB door button (Main power supply OFF and ON)
- Control panel button
- Customer specific devices

Safety circuit

Local/remote emergency off circuit is main safety circuit of ACS580MV.

WARNING! Obey the instruction in chapter *Safety instructions*. If you ignore them, injury or death, or damage to the equipment can occur.

NOTICE! This test is only possible to preform after energizing and starting the drive, please follow instructions in section *Starting the drive after maintenance*.

1. Start the drive.
2. Initiates an immediate stop by pushing local emergency off button, following happens immediately:
   - The pulses of the inverter are blocked
   - The MCB is tripped
   - The DC link is discharged
   - All auxiliary circuits remain live
3. Reset emergency by:
   - Pulling out emergency off push button;
   - Pressing Emergency Reset button (optional for SIL3)
4. Repeat step 1 to 4 to test remote emergency off circuit.
5. There should be no component failure or system level shut down during the test.

Capacitors

The power module intermediate circuits contain electrolytic capacitors. Their lifespan depends on the operating time of the drive, loading and ambient temperature. You can prolong capacitor life by lowering the ambient temperature.

In order to ensure reliable drive operation, replace the power modules according to the maintenance interval table.

Reforming capacitor of power modules

The DC link capacitors in power modules need to be reformed in case the drive or spare power module has been nonoperational for more than one year.

1. Check storage time of drive and spare power module:
   - Check the event log by local control panel or PC tool Drive composer, find the time of latest event “Drive charged”, it’s the most recent charging date of drive
   - For the first time to reform spare power module, find its serial number, which defines week of manufacture. For example, 2UBA916040009

   - 2UBA9: Fixed value

   - 16: Year of manufacture (2016)

   - 04: Week of manufacture (4th week)

   - 0009: Running number

   - It’s highly recommended to record reforming date for future maintenance
2. Reforming capacitors in power modules if the storage time more than 1 year but less than 2 years:
   - Charging the drive by following section *Energizing and starting the drive* in chapter *Operation*.
   - The power modules will be powered on and reformed
   - Do not load the drive while reforming is ongoing, keep this hot standby status for certain time as below figure requires:

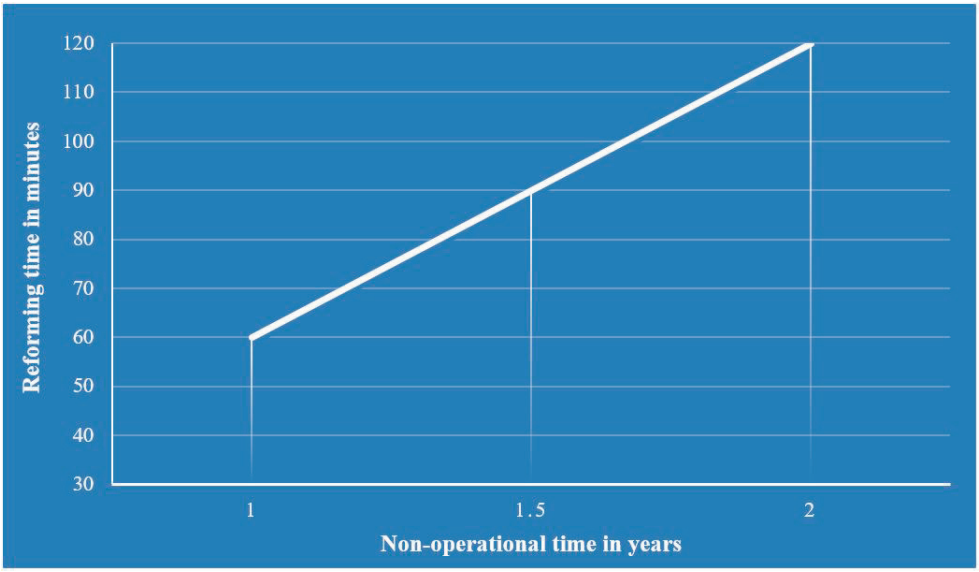

   - Discharging the drive
   - The spare power modules can also be reformed in drive, install spare power modules by following section *Replacing the power modules*, repeat upper reforming process
3. Reforming capacitors in power modules if the storage time more than 2 years:

Contact the ABB service organization, skilled personnel and specific equipment are needed.

Replacing roof AC fans*

1. Stop, de-energize and ground the drive following the steps in section Shutting down the drive for maintenance before you start the work.
2. Switch off the motor starter of the fan unit to isolate the fan unit from the auxiliary power supply. To identify the motor starter, see ACS580MV Wiring Diagram.
3. Remove the hex-head combination screws (M6x16) that attach the top cover to the fan box. Lift the top cover and pull it away from the fan box.

4. Disconnect the connector and make sure that the supply connector is detached from the support beam.

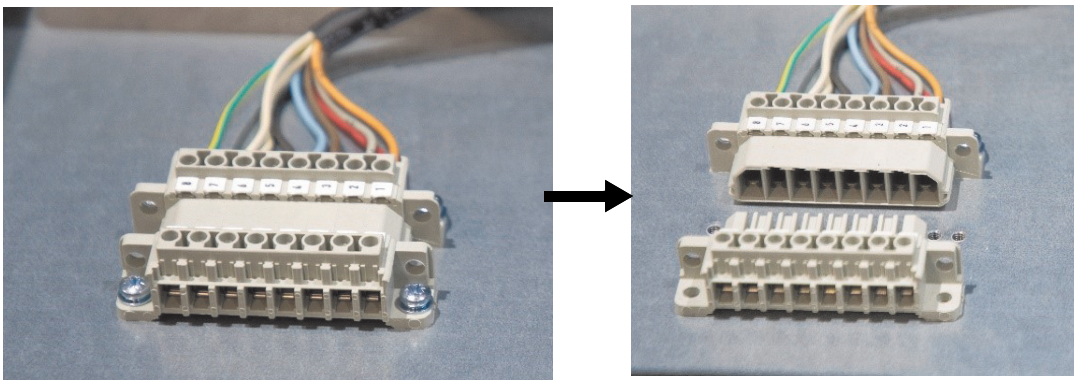

5. Remove the four hex-head combination screws (M6x16) that attach the support beam to the side plate of fan box frame.

NOTICE

For some types of fan boxes two additional hex-head combination screws must be removed.

6. Fix the lifting eyes to the support beam. Attach lifting gear, appropriate for the weight of the impeller, to the lifting eyes. Lift off the support beam and the impeller attached to it.

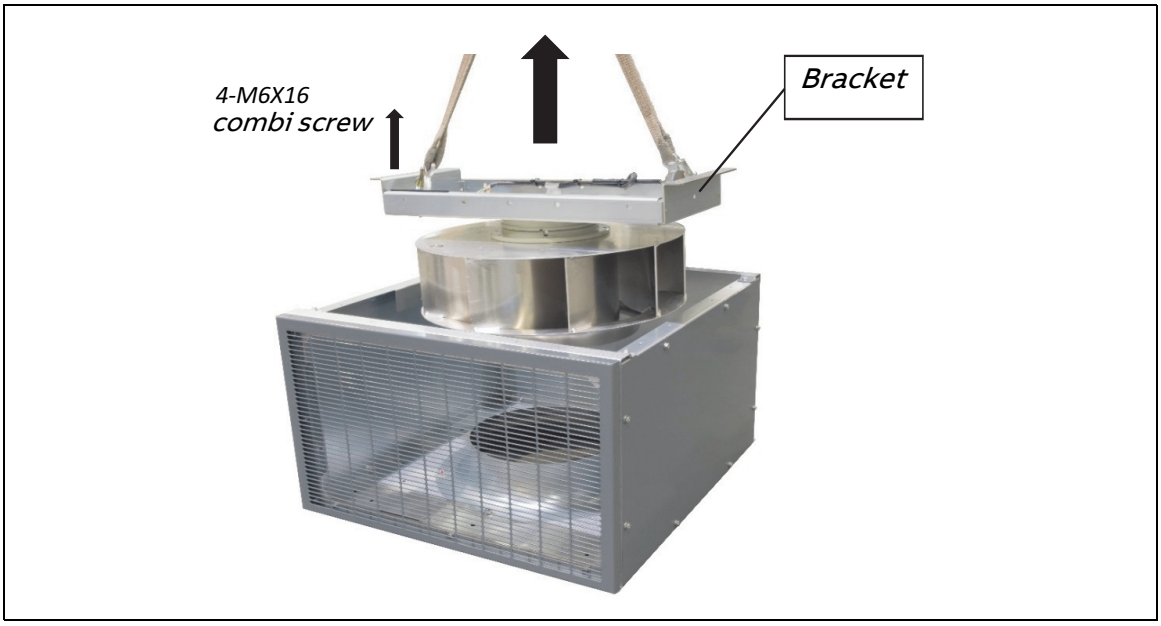

7. Remove the hex-head screws which attach the support beam to the impeller.

NOTICE

Type and quantity of the hex-head screws depend on the impeller model.

8. Disconnect the power cable from the connector on the support beam.

9. Mount the new impeller to the support beam.
10. Connect the wires of the fan motor cable to the terminal block according to the electrical drawings.
11. Proceed in reverse order as previously described to reinstall the impeller with the support beam.
12. Check by hand for proper fan rotation before energizing the drive.

13. When the work is completed the drive can be started up again. See section *Energizing and starting the drive* in chapter *Operation*.
14. Check visually the direction of fan rotation when starting the drive. The correct rotation direction please refer to arrow direction posted on fan box.

* Depends on site situation, ACS580MV fan box can be mounted backward, the screw positions are compatible between fan box and cabinet top plate. The procedure can refer to instruction above. For details of the AC fan box outline information, see *ACS580MV Air duct interface Outline Drawing of AC Fan Box*.

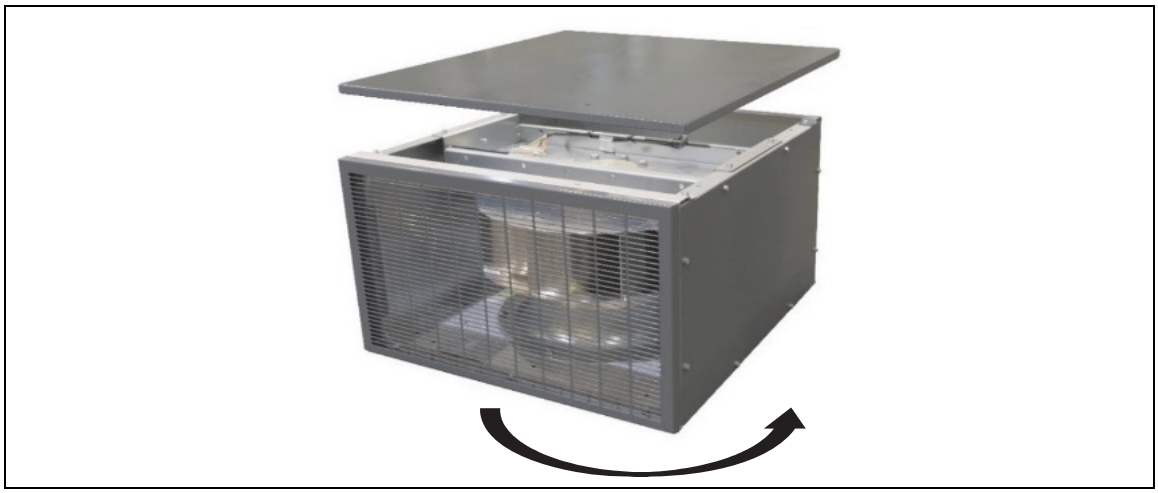

Required tools and equipment

- Screwdriver for M6 and M10 screw
- Lifting eye: M8, 2 pieces

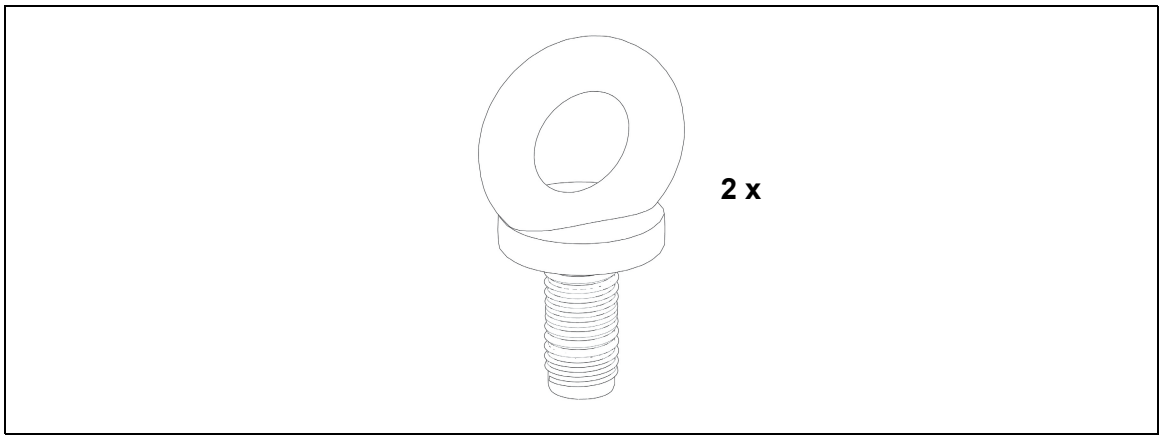

The fans can be lifted by crane or by hand.

Replacing roof EC fans*

Procedure

1. Stop, de-energize and ground the drive following the steps in section *Shutting down the drive for maintenance* before you start the work.
2. Switch off the motor starter of the fan unit to isolate the fan unit from the auxiliary power supply. To identify the motor starter, see ACS580MV Wiring Diagram.
3. Remove the hex-head combination screws that attach the top cover to the fan box. Lift the top cover and pull it away from the fan box.

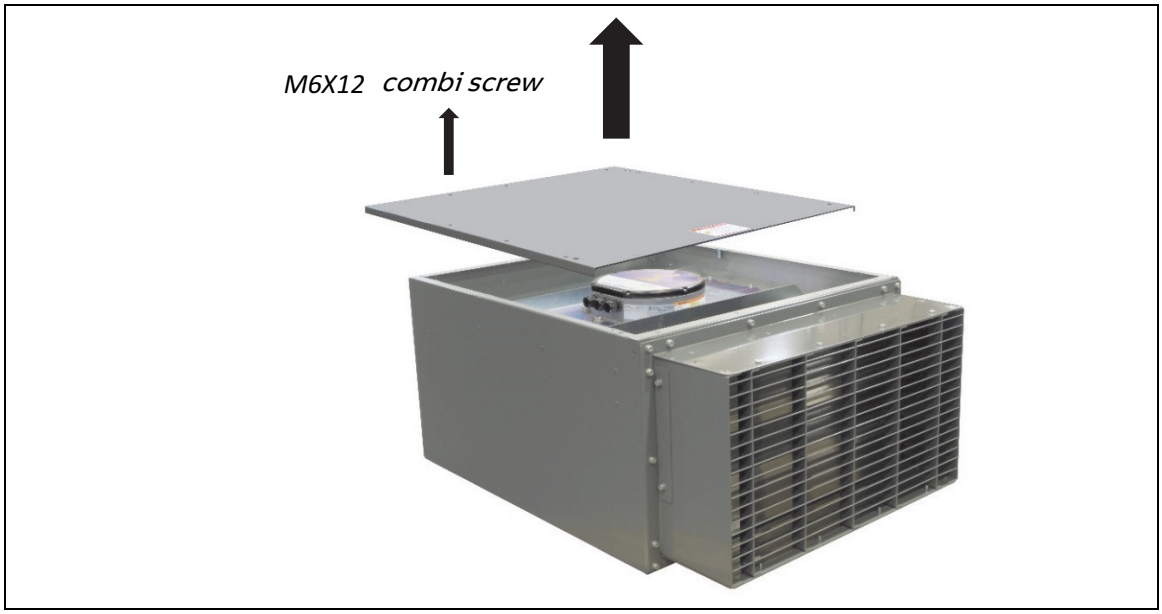

4. Disconnect the control and power supply cables of the fan.

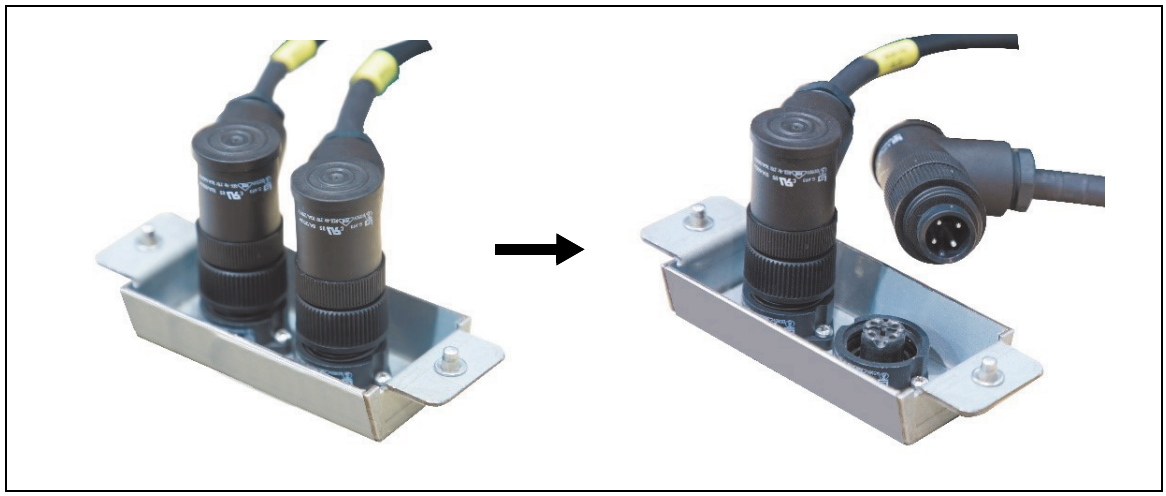

5. Remove the fastening screws from the support plate and the duct ring.

6. Using the lifting eyes in the fan housing cover and a lifting gear, lift off the support plate with the fan attached to it.

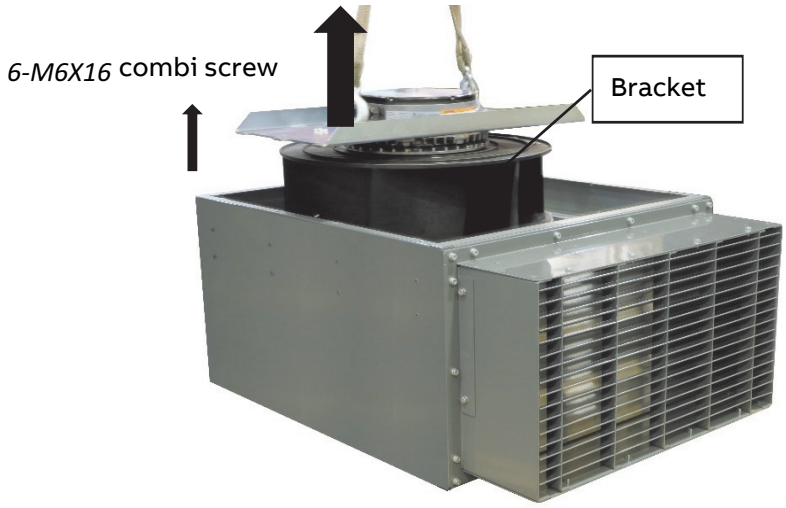

7. Unscrew the support plate from the fan.

NOTICE

Type and quantity of the hex-head screws depend on the impeller model.

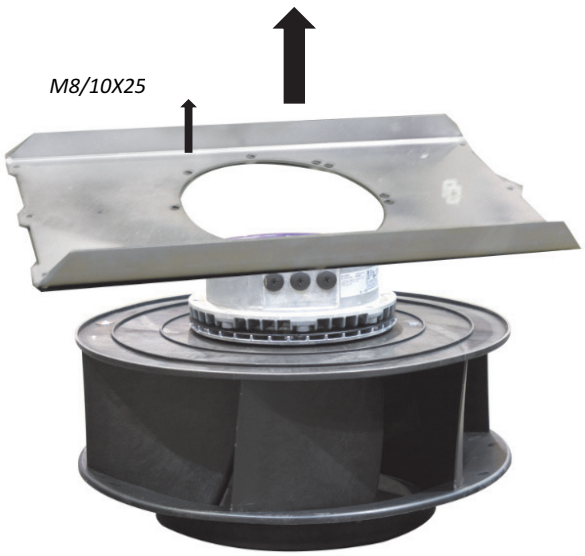

8. Replace the fan and re-assemble in reverse order of removal.

* depends on site situation, ACS580MV fan box can be mounted backward, the screw positions are compatible between fan box and cabinet top plate. The procedure can refer to instruction above. For details of the EC fan box outline see ACS580MV Air duct interface Outline Drawing of EC Fan Box.

Replacing the power modules

WARNING! Obey the instructions in chapter *Safety instructions*. If you ignore them, injury or death, or damage to the equipment can occur.

Required manpower and tools

Two persons are required for replacing a power module.

The following tools are needed:

- Screwdrivers: M6, M8, M10, M12
- Torque wrench with extension bar

Replacement of a power module frame size R1 - R3

The replacement procedure is basically the same for power modules of R1-R3. The main difference is the weight of the module types. Replacement power modules must always be of the same type.

Dismounting

1. Stop, de-energize and ground the drive following the steps in section *Shutting down the drive for maintenance* before you start the work.
2. Switch off all miniature circuit breakers in the control compartment.
3. Ground the power modules according to *Grounding power module enclosure and busbar with grounding hook* on page *112*.
4. Disconnect the fiber optic links from the power module.
5. Loosen and detach the three power cables and the two busbars behind the cables.

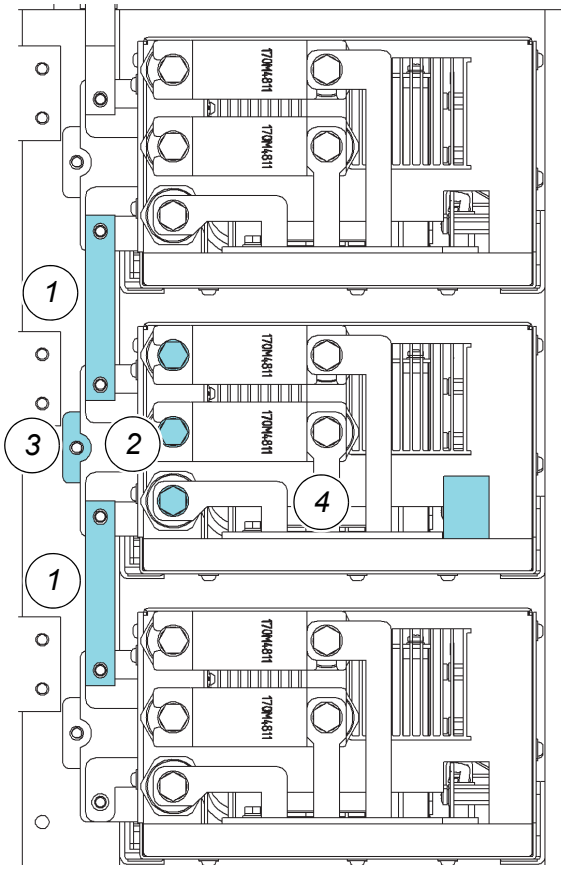

1	Busbar connections
2	Power cable terminals
3	Fixation screws
4	Terminals for fiber optic cables

6. Loosen and detach the one fixation screws in the front of power module.

7. Slide out the power module by hand

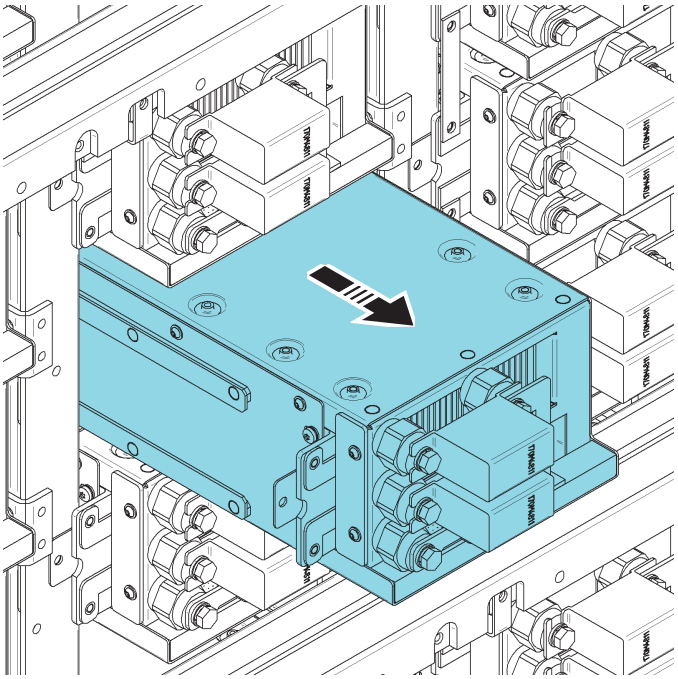

- Weight of power module: max. 12 kg.

  Obey local regulations when lifting the power modules.

Mounting

1. Install the new module in reverse order of removal.
2. Switch on all miniature circuit breakers in the control compartment.
3. When the work is completed the drive can be started up again. See Chapter *Operation, Energizing and starting the drive*.

Converter module testing and repair

Testing and repair of a defective power module is done at ABB works. Send the module in for repair.

Replacing the power module fuse R1 - R3

1. Stop, de-energize and ground the drive following the steps in section *Shutting down the drive for maintenance* before you start the work.
2. Switch off all miniature circuit breakers in the control compartment.
3. Ground the power modules according to *Grounding power module enclosure and busbar with grounding hook* on page *112*.
4. Loosen the 2 mounting screws of the fuse to be replaced.
5. Pull out the fuse.
6. Install the replacement fuse in reverse order of removal.
7. Reinstall the power module in reverse order of removal.
8. Switch on all miniature circuit breakers in the control compartment.
9. When the work is completed the drive can be started up again. See Chapter *Operation, Energizing and starting the drive*.

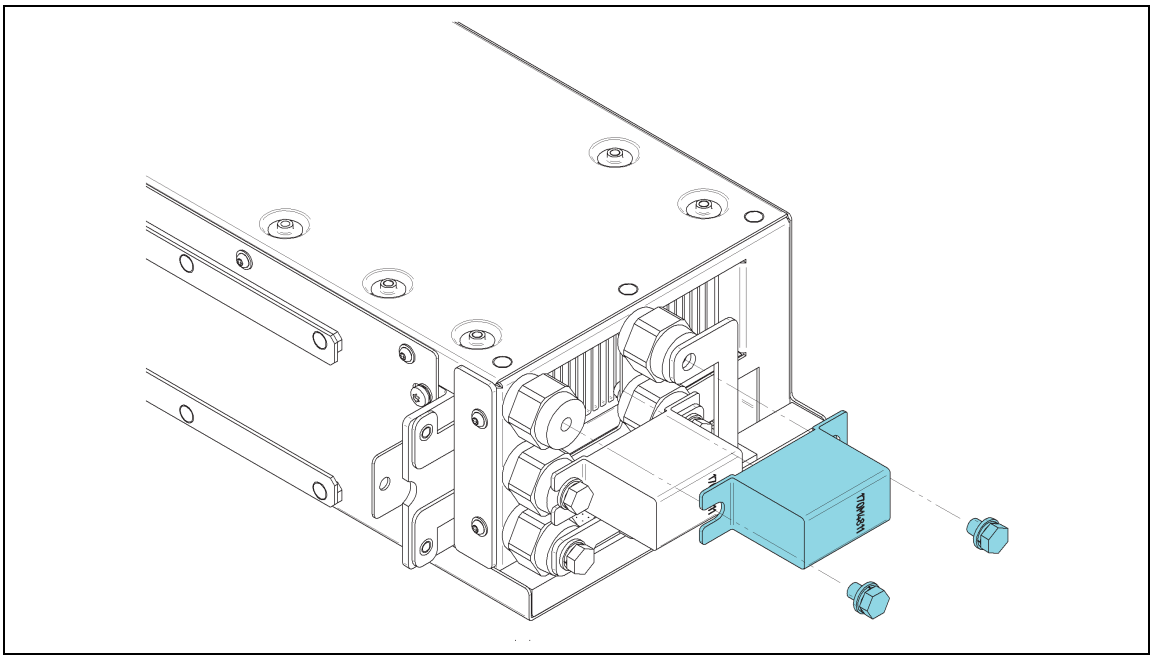

Replacing power module fuse on a module of frame size R1 - R3

Replacement of a power module frame size R4 - R6

The replacement procedure is basically the same for power modules of frame size R1-R3. The main difference is the weight of the module types. Replacement power modules must always be of the same type.

Dismounting

1. Stop, de-energize and ground the drive following the steps in section *Shutting down the drive for maintenance* before you start the work.
2. Switch off all miniature circuit breakers in the control compartment.
3. Ground the power modules according to *Grounding power module enclosure and busbar with grounding hook* on page *112*.
4. Disconnect the fiber optic links from the power module.
5. Loosen and detach the three power cables and the two busbars behind the cables.

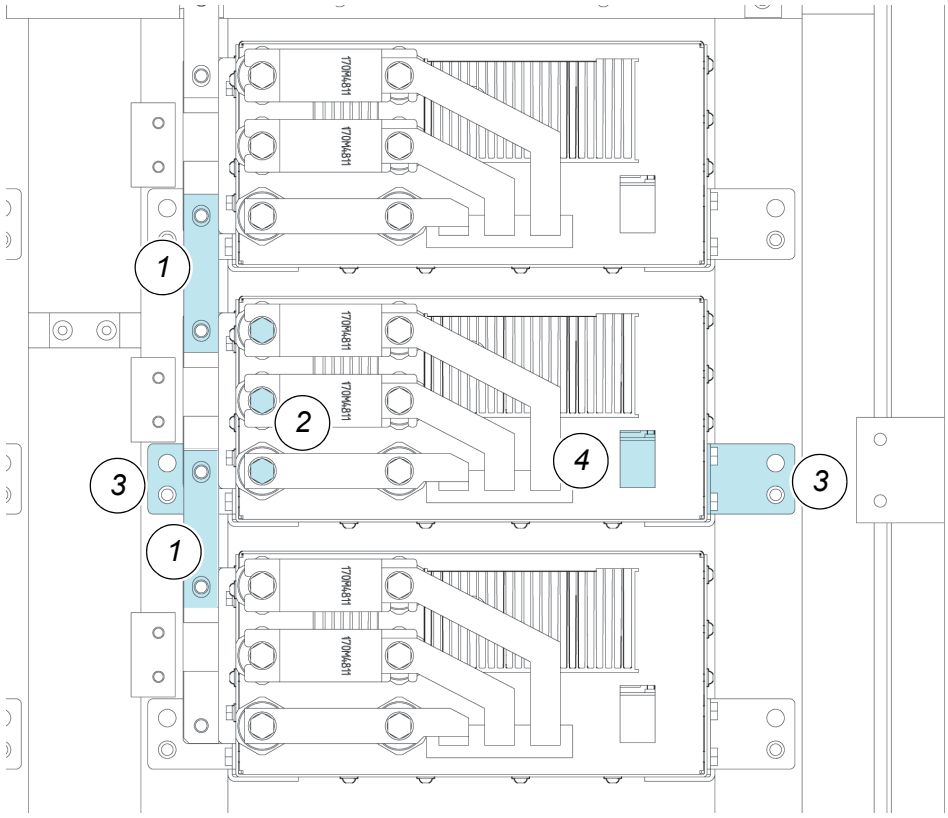

1	Busbar connections
2	Power cable terminals
3	Fixation screws
4	Terminals for fiber optic cables

6. Loosen and detach the two fixation screws in the front of power module.
7. Slide out the power module by hand

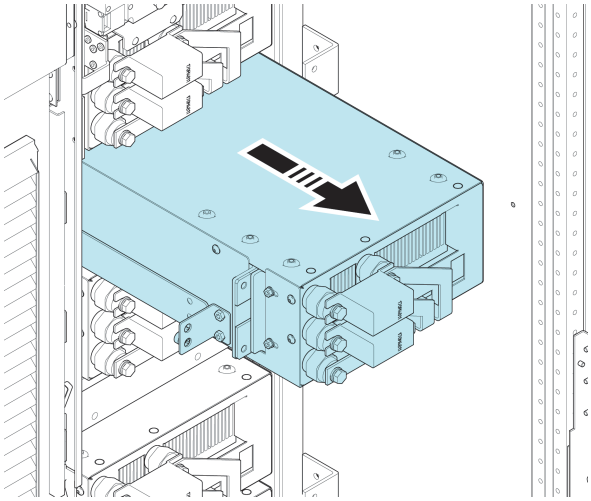

- Weight of power module: max. 21 kg.

  Obey local regulations when lifting the power modules.

Mounting

1. Install the new module in reverse order of removal.
2. Switch on all miniature circuit breakers in the control compartment.
3. When the work is completed the drive can be started up again. See Chapter *Operation, Energizing and starting the drive*.

Converter module testing and repair

Testing and repair of a defective power module is done at ABB works. Send the module in for repair.

Replacing the power module fuse R4 - R6

1. Stop, de-energize and ground the drive following the steps in section *Shutting down the drive for maintenance* before you start the work.
2. Switch off all miniature circuit breakers in the control compartment.
3. Ground the power modules according to *Grounding power module enclosure and busbar with grounding hook* on page *112*.
4. Loosen the 2 mounting screws of the fuse to be replaced.
5. Pull out the fuse.
6. Install the replacement fuse in reverse order of removal.
7. Reinstall the power module in reverse order of removal.
8. Switch on all miniature circuit breakers in the control compartment.
9. When the work is completed the drive can be started up again. See Chapter *Operation, Energizing and starting the drive*.

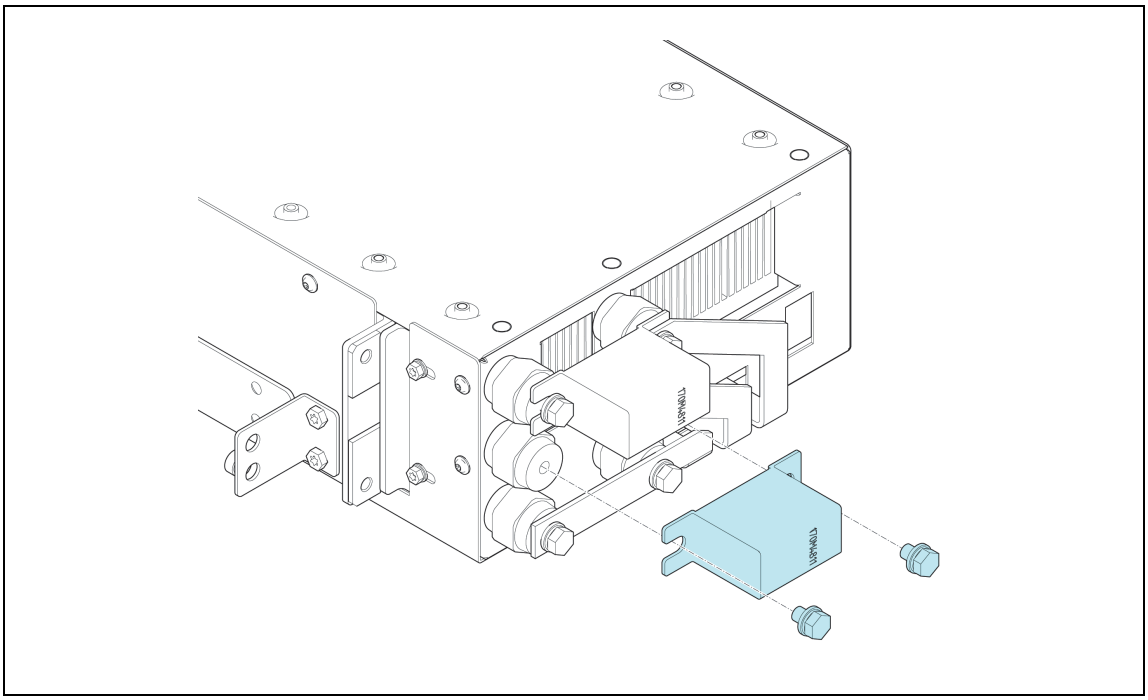

Replacing power module fuse on a module of frame size R4 - R6

Replacement of a power module frame size R7 - R9

The replacement procedure is basically as for power module of frame size R4-R6.

The main difference is the weight of the module types. Replacement power modules must

always be of the same type.

Tools and accessories

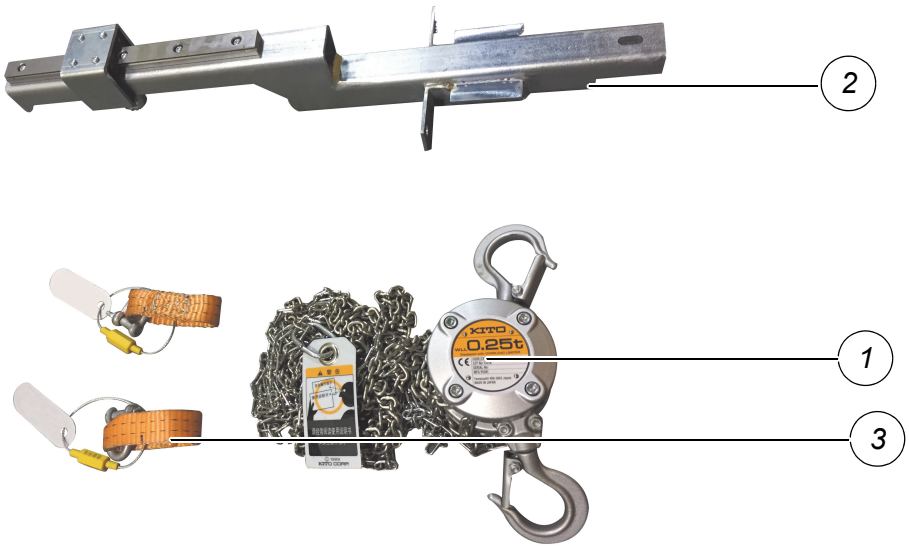

1	*Hoisting gear*
2	*Hoist*
3	*Lifting belt*

Dismounting

1. Stop, de-energize and ground the drive following the steps in section *Shutting down the drive for maintenance* before you start the work.
2. Switch off all miniature circuit breakers in the control compartment.
3. Ground the power modules according to *Grounding power module enclosure and busbar with grounding hook* on page *112*.
4. Attach the hoist to the front base beam of the cabinet.

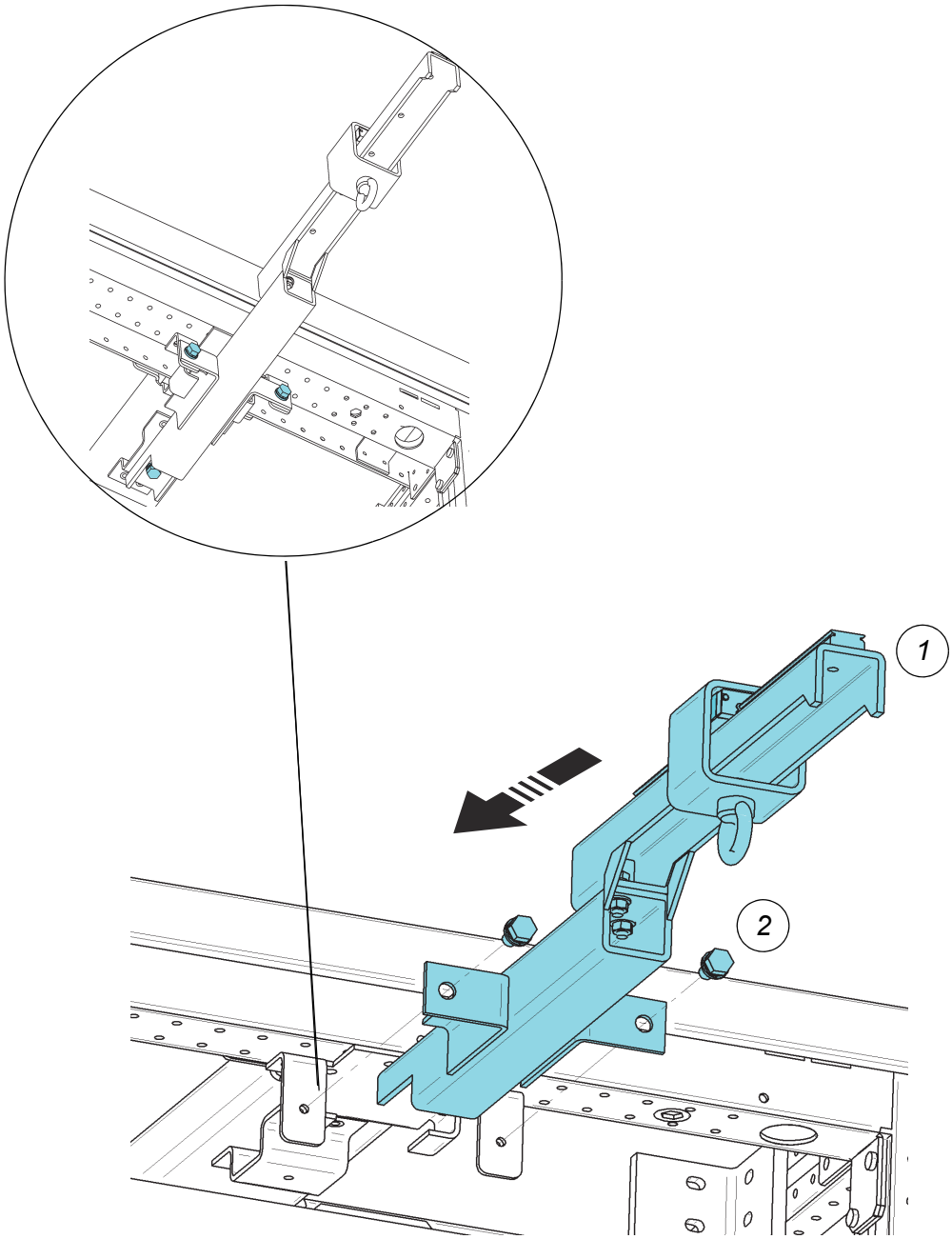

1	*Hoist*
2	*screw M8X20*

5. Disconnect the fiber optic links from the power module.

6. Loosen and detach the three power cables and the two busbars in front of the power module.

1	*Busbar connections*
2	*Power cable terminals*
3	*Fixation screws*
4	*Terminals for fiber optic cables*

7. Loosen and detach the three fixation screws (M6X16) that attach the power module to the front lock.

8. Slide out the power module by hand until stopped by the front lock.

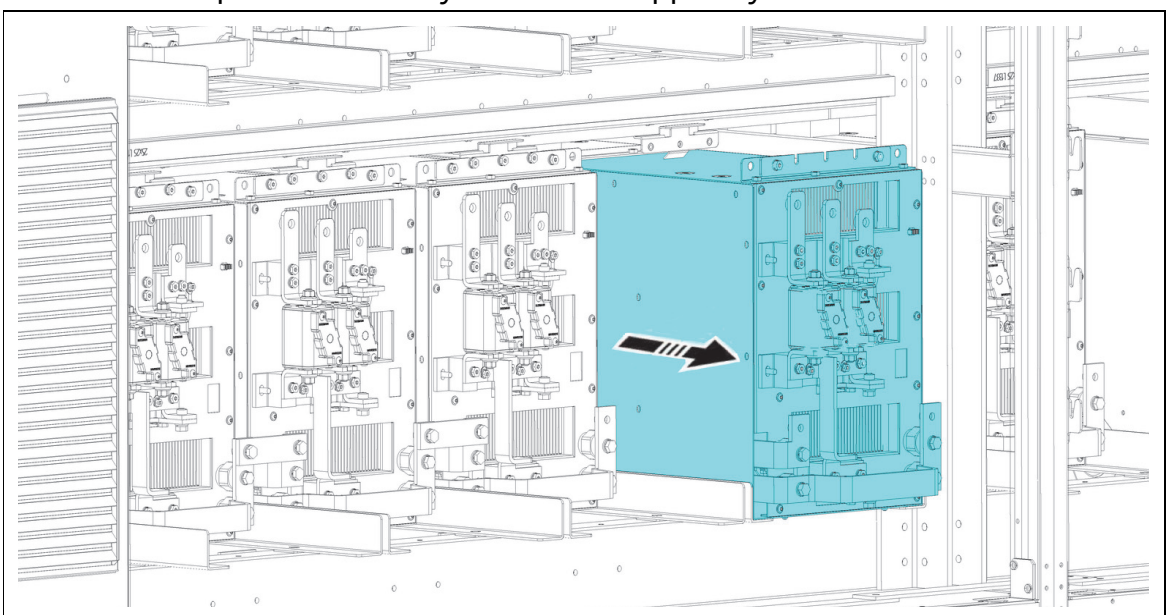

9. Lift the blocking bar of the front lock and pull out the power module until the front lock

stops it again.

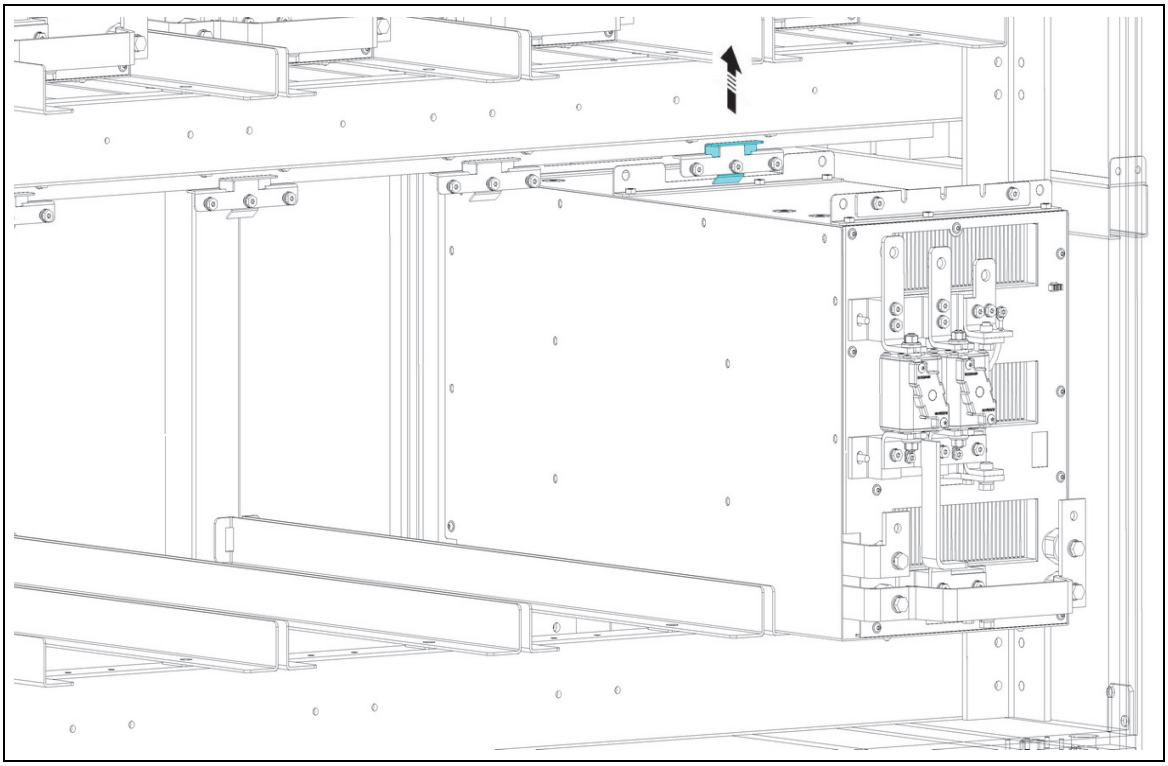

10. Connect the second lifting belts to the lifting eyes provided on the power module.

11. Lift again the blocking bar of the front lock, pull the power module completely out of the support module beam and lower it.

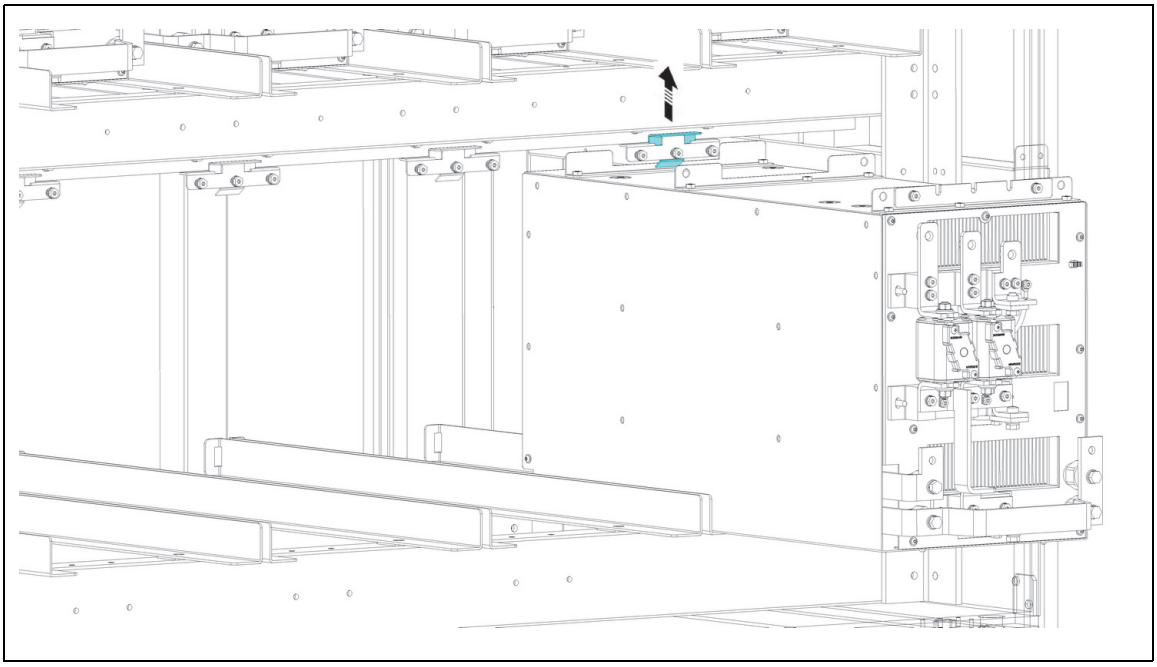

WARNING! Weight of power module: max. 65 kg. Obey local regulations when lifting the power modules.

Mounting

1. Loosen and detach the two combination screws (M6X16) from the front lifting bar that attach the power module to be replaced.

2. fix the adapt plate to the new power module with two combination screws (M6X16), but don't fix tightly.

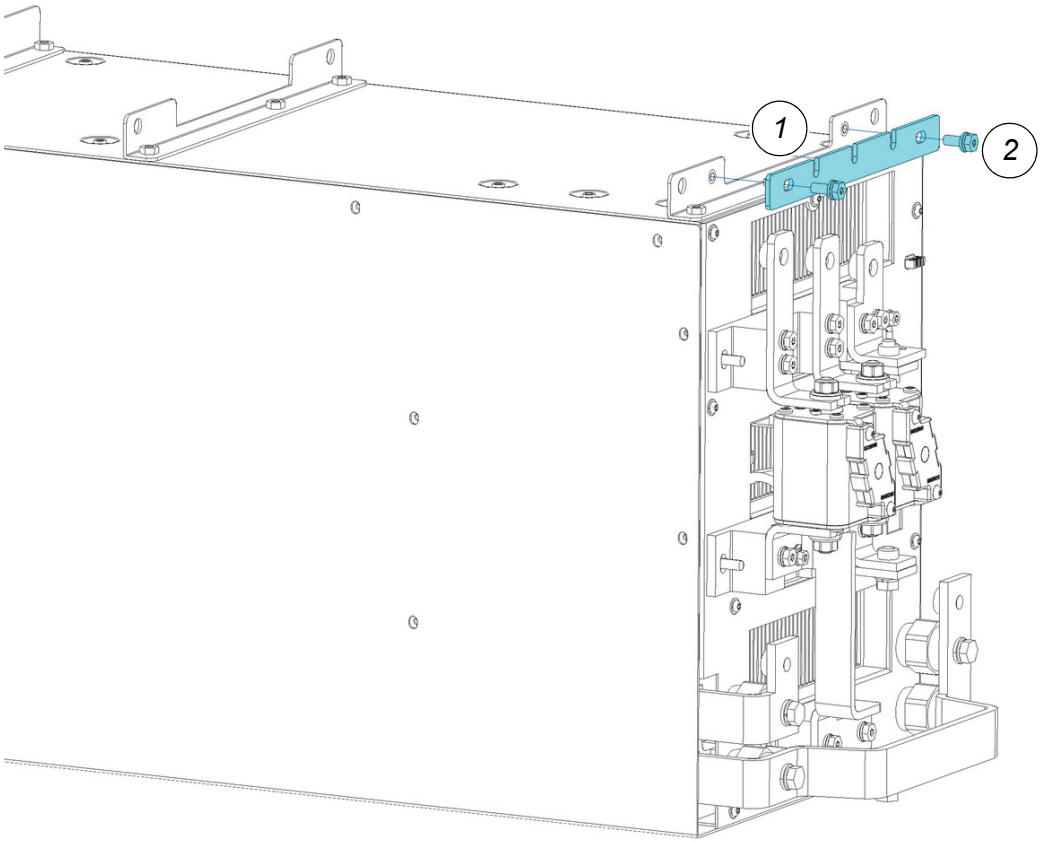

1	*Busbar connections*
2	*Power cable terminals*
3	*Fixation screws*
4	*Terminals for fiber optic cables*

3. Install the new module in reverse order of removal.

4. Adjust the metal plate to alien the middle three holes with lock holes, fix the connection with five combination screws (M6X16).

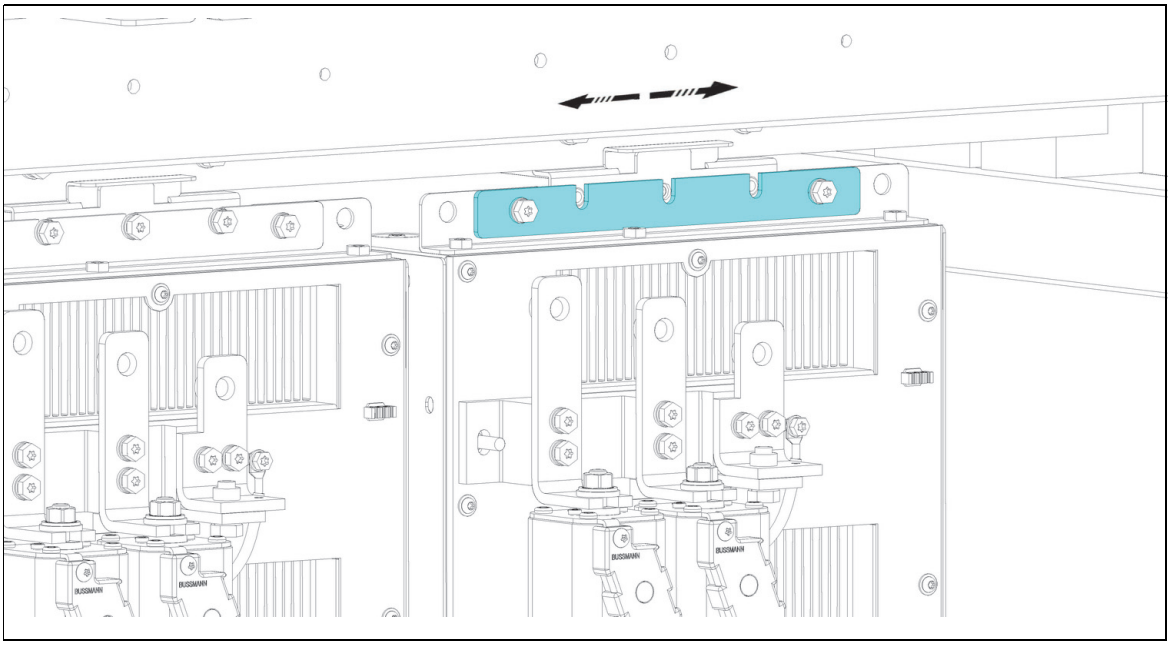

5. Switch on all miniature circuit breakers in the control compartment.
6. When the work is completed the drive can be started up again. See Chapter *Operation, Energizing and starting the drive*

Replacing the power module fuse R7 - R9

1. Stop, de-energize and ground the drive following the steps in section *Shutting down the drive for maintenance* before you start the work.
2. Switch off all miniature circuit breakers in the control compartment.
3. Ground the power modules according to *Grounding power module enclosure and busbar with grounding hook* on page *112*.
4. Loosen the 2 mounting screws of the fuse to be replaced.
5. Pull out the fuse.
6. Install the replacement fuse in reverse order of removal.
7. Reinstall the power module in reverse order of removal.
8. Switch on all miniature circuit breakers in the control compartment.
9. When the work is completed the drive can be started up again. See Chapter *Operation, Energizing and starting the drive.*

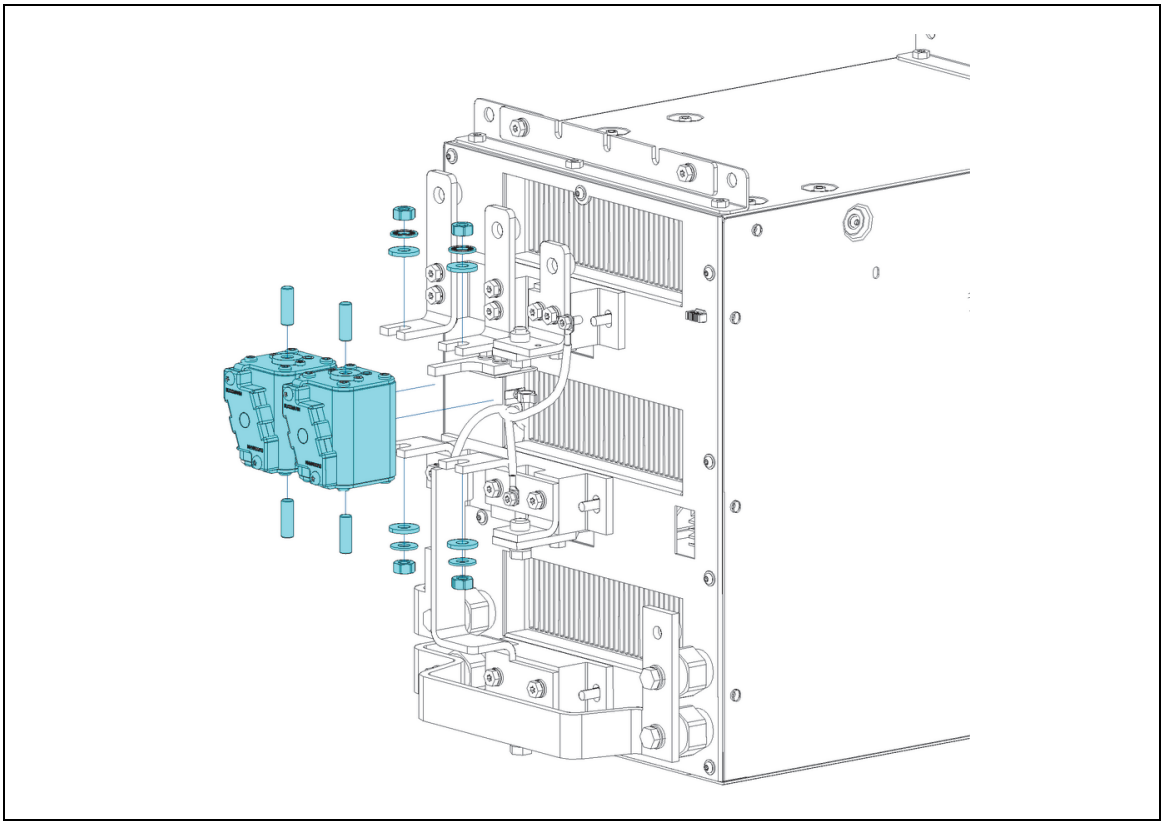

Replacing power module fuse on a module of frame size R7 – R9

Replacing the control panel battery

The battery is housed on the rear of the control panel. Replace with a new battery. Dispose the old battery according to local disposal rules or applicable laws.

For details refer to the *ACS-AP-X assistant control panels user's manual*.

Circuit board replacements

NOTICE

Electrostatic discharge (ESD) can damage electronic boards and components.

Do not touch printed circuit boards or other sensitive components without applying static-sensitive handling precautions!

Do not touch the components without wearing ESD protection device.

Put the board or component on a grounded working surface protected against electrostatic discharges.

Hold a board only at the edge.

Handle a faulty board as carefully as a new one.

NOTICE

Any electrical board replacement must be done after power is off. Only qualified electricians are allowed to carry out electrical parts replacement.

Control unit (BCU) and memory unit (ZMU)

To locate the BCU see figure *Control compartment with open swing frame* on page *35*.

Procedure:

1. Stop, de-energize and ground the drive following the steps in section *Shutting down the drive for maintenance* before you start the work.
2. Switch off all miniature circuit breakers in the control compartment.
3. Unplug all connectors on the BCU.
4. Loosen the end brackets of BCU.

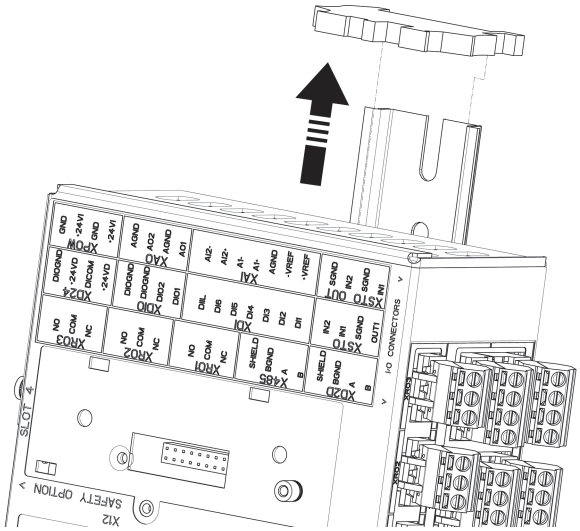

5. Keep the top of the BCU (looking to the back in cabinet) in place and twist the bottom (looking towards you) to pull it out of the mounting rail.

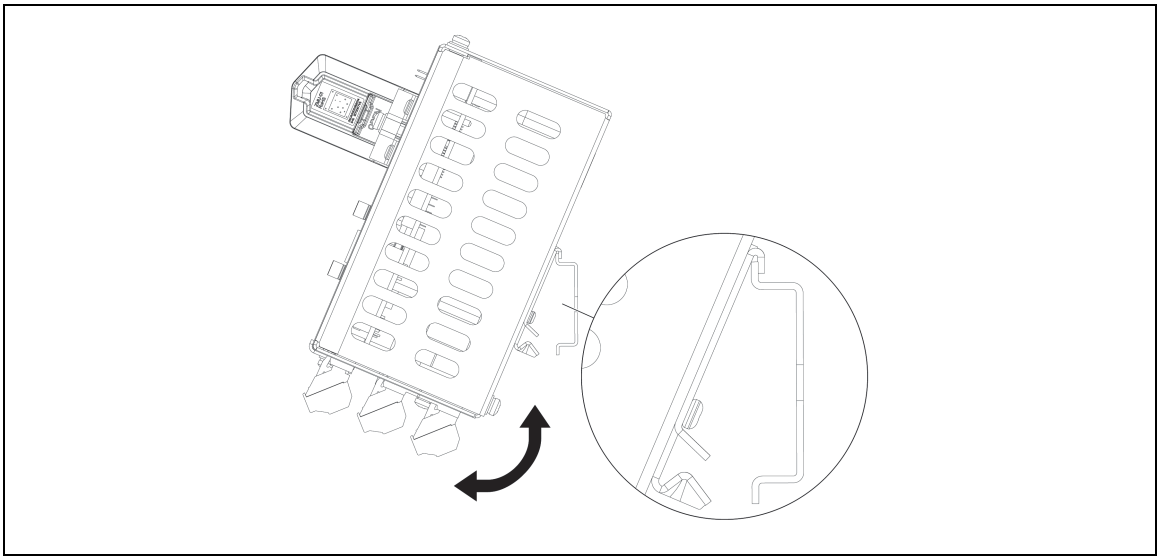

View from bottom of cabinet

When a BCU is replaced, the parameter settings can be retained by transferring the memory unit (ZMU) from the defective BCU to the new BCU. The ZMU is located on the control unit, see B in figure *Replacement of BCU components* below.

NOTICE

In case of a defective ZMU, the drive needs to be re-parametrized. Please contact ABB service.

6. Remove the ZMU: undo the fastening screw and pull out the memory unit.

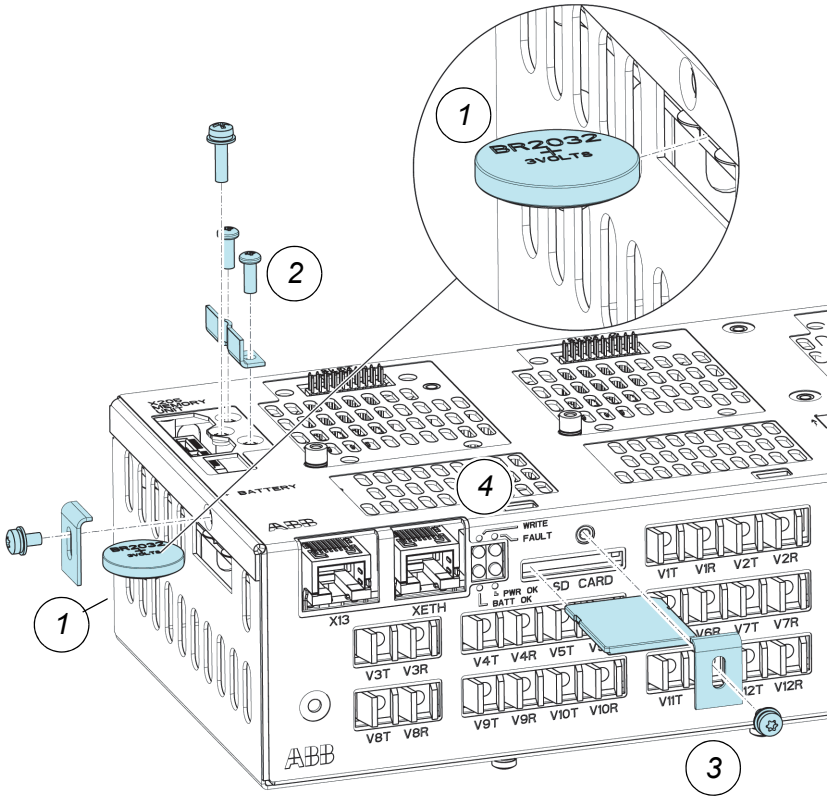

1	Real-time clock battery
2	Fastening screws for ZMU
3	Fastening screw for SD card
4	Indication LEDs

Replacement of BCU components

7. Insert the new ZMU and fasten the screw.
8. Install the new BCU in reverse order of removal.
9. When the work is completed the drive can be started up again. See Chapter *Operation, Energizing and starting the drive*.

   After power-up, the BCU scans the memory unit. If a different control program or different parameter settings are detected, they are copied to the BCU. This can take several minutes.
10. Contact ABB service as soon as possible to obtain a new license before the trial mode expires.

NOTICE

After a BCU or memory replacement, the license might not match the new hardware. The drive can be operated with full functionality in trial mode for 30 days. If the drive is not relicensed within this period, it will stop working after the trial period is over.

Replacing the SD memory card

The SD card is used to record fault information for analysis. It can be removed while the drive is running. Please note that if the SW version is lower than **MHDRE 3.12.0.5**, there is a low probability that drive reports fault while inserting SD card back to the slot. The fault can be reset by rebooting BCON.

SD/SDHC flash memory type: maximum supported size 4 GB, CLASS 4, 6, 10.

To replace the SD memory card:

1. Check the SW version and make sure it is MHDRE 3.12.0.5 or higher.
2. Check that the yellow LED is off (see D in the *Replacement of BCU components* figure above).

   Do not remove the SD card while the yellow LED is lit, which indicates that writing to the SD card is in progress.
3. Undo the fastening screw of the clip covering the memory card and press the card to remove it. For the card location, see C in the figure *Replacement of BCU components* above.
4. Insert the new card in reverse order.

Replacing the real-time clock battery

The real-time clock battery must be replaced if the “BATT” LED is not illuminated when the control unit is powered (see D in the *Replacement of BCU components* figure *Replacement of BCU components* above).

Real-time clock battery type: BR2032:

- Temperature range -30...+80 °C (-22...176 °F)
- Voltage 3 V
- Nominal capacity approx. 200 mAh
- To be replaced every 5 years

Procedure:

1. Stop, de-energize and ground the drive following the steps in section *Shutting down the drive for maintenance* before you start the work.
2. Switch off all miniature circuit breakers in the control compartment.
3. Undo the fastening screw and remove the battery (see A in figure *Replacement of BCU components* above).
4. Insert the new battery according to the figure *Replacement of BCU components*.
5. Set the real-time clock.
6. When the work is completed the drive can be started up again. See Chapter *Operation, Energizing and starting the drive*.
7. Dispose the old battery according to local disposal rules and applicable laws.

High voltage divider board

To locate the high voltage divider board, see figure *Terminal compartment with cover plate removed* on page *29*.

Procedure:

1. Stop, de-energize and ground the drive following the steps in section *Shutting down the drive for maintenance* before you start the work.
2. Switch off all miniature circuit breakers in the control compartment.
3. Loosen the cable connection at the board to be removed.
4. Hold the divider board and remove the two fixation screws.
5. Install the replacement divider board in reverse order of removal.
6. When the work is completed, the drive can be started up again. See Chapter *Operation, Energizing and starting the drive*.

CVMI2 board

To locate the CVMI2 board, see figure *Control compartment with swing frame closed* on page *36*.

Procedure:

1. Stop, de-energize and ground the drive following the steps in section *Shutting down the drive for maintenance* before you start the work.
2. Switch off all miniature circuit breakers in the control compartment.
3. Unplug the fiber optic link (A1, A8), the power supply connector (X201) and the signal connectors (X203, X204, X205, X206, X207,).
4. Loosen the 4 fixation screws and remove the board.
5. Install new CVMI2 board reconnect in reverse order of removal.
6. When the work is completed the drive can be started up again. See Chapter *Operation, Energizing and starting the drive*.

Control hub

To locate the control hub see figure *Inverter unit (drive type 11R6)* on page *31*.

Procedure:

1. Stop, de-energize and ground the drive following the steps in section *Shutting down the drive for maintenance* before you start the work.
2. Switch off all miniature circuit breakers in the control compartment.
3. Unplug all fiber optic links on the daughter boards and fiber optic links Y1,Y2, power supply connector (X1), signal connectors (X2) and the pressure tube.
4. Hold the control hub, loosen the 8 fixing screws on the mounting plate and remove the module.

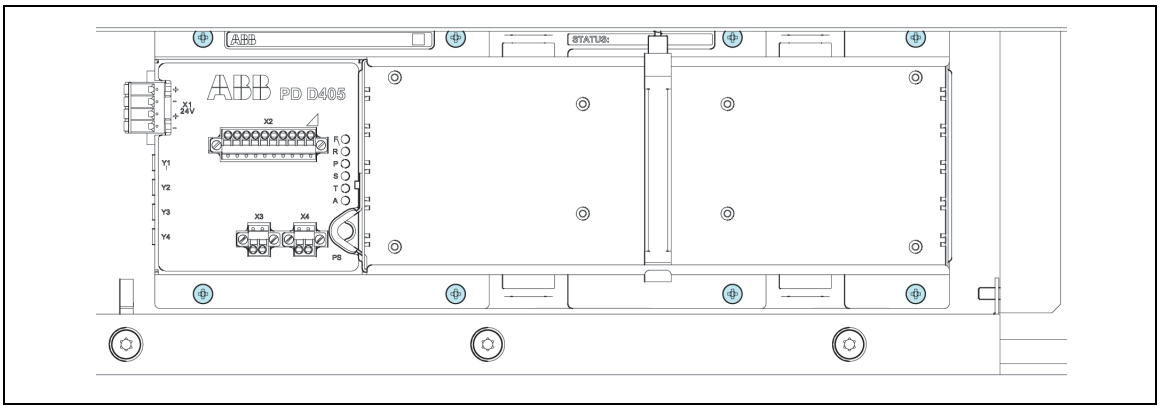

5. Install the new control hub in reverse order.
6. When the work is completed the drive can be started up again. See Chapter *Operation, Energizing and starting the drive*.

Control hub daughter board

The control hub daughter boards are mounted in slots on the control hub board.

1. Stop, de-energize and ground the drive following the steps in section *Shutting down the drive for maintenance* before you start the work.
2. Switch off all miniature circuit breakers in the control compartment.
3. Unplug all fiber optic links on daughter boards.
4. Loosen the screws of the retainer and remove it.

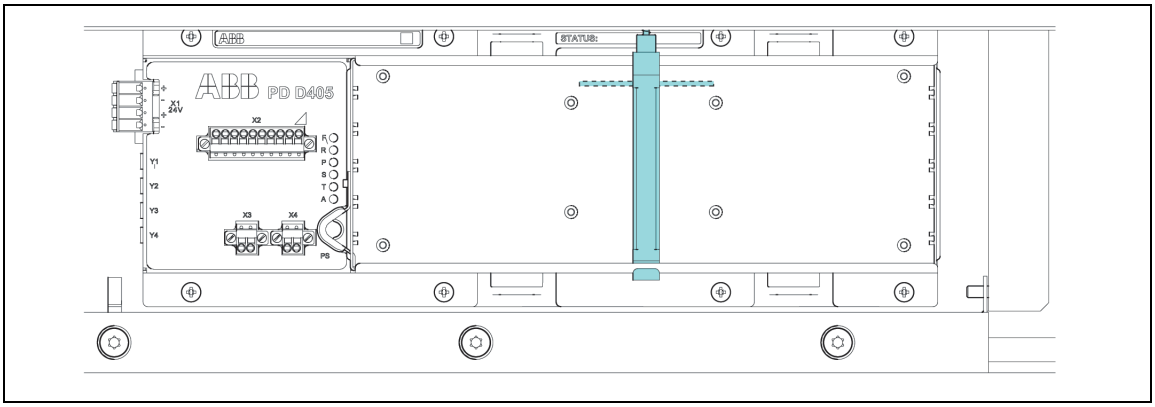

5. Pick the daughter board to be replaced and withdraw.
6. Install the new daughter board in reverse order.
7. When the work is completed the drive can be started up again. See Chapter *Operation, Energizing and starting the drive*.

Maintenance schedule

The recommended intervals for maintenance and component replacement are based on the normal operating conditions of the drive. The drive should be checked at least every two years by qualified personnel whose recommendations should be followed. Depending on the actual condition of the drive, the maintenance work can be carried out before or after the recommended interval.

For detailed inspect and replacement time interval, see *ACS580MV Preventive Maintenance Schedule*.

Drive seasonal operation

This chapter contains instruction for drive special preventive maintenance when drives standby more than 2 months. The objective is to avoid malfunction or damage components when the drives restart up after a long time storage, further to improve operating efficiency and extending the life of the drives. The example practice is heating application which drives only operate in winter days.

Shutting down the drive for maintenance

See chapter Maintenance, shutting down for maintenance for instructions. Follow the established shutdown procedure by using local operator panel of the drive.

Maintain the drive for preservation

During standby, it is important to make the drive protected from harsh ambient conditons of dust, temperature and himidity. Keep the temperature in E-house be relative stable in the range of 0°C to 50°C, and relative humidity be lower than 70%. Recommended maintenance soultions.

- Prefered solution: put silica gel bags (type of desiccant) inside the cabinets. Silica gel bags should not be in direct contact with metal parts because they can cause corrosion after saturation. The required bag quantity can be calculated based on protection capacity and cabinet dimension. Close all the doors and cover the drive with plastic film and seal it by tape as tight as possble. That will provide protection against dust, salty air or pest during storage.

ABB offered desiccant is 3ABD00005991 (500g/bag). Refer to the minimum desiccan quantity based on door width.

Distribution	Minimum desiccant quantity
1xDoor width 600mm	1x500g
2xDoor width: 800mm	3x500g

- Alternative solution: cover and seal cabinet inlet/outlet and fan box with plastic or waterproof clothes. That will alleviate the impact from dust, salty air or pest during storage.

Maintain the drive before restarting up

The maintenance actions can be done by end users to to avoid potential malfuction or damage components when drive restarting up. Following the chapter of Mainteance schedule (Years from start-up) to do the recommended maintenance and component replacement. It is mandatory to complete the checklist before restarting up can take place.

Visual inspection and take maintenance actions if need	
1	No dust in E-house
2	Cleaning heatsinks with an ESD vacuum cleaner. It is prohibted to replace PEBBs or open PEBBs. If really needed, contact ABB.
3	Air inlet and outlet are clean
4	All air filter mats are clean. Otherwise, replace with new ones from ABB. It is prohibited to wash the filter mats because the tissue structure will be destroyed
5	No dust and corrosion in cabinet
6	No tools and foreign objects are left inside the cabinets. Don't forget move out the desiccants in the cabinets.
7	No condensing in cabinet
Cable and connector	
1	Fully inspect tighteness of terminals, connectors connection and visual damage of cables.
2	All power cables to drive, and from drive to motor are meggered, and measured values are within the required limits.
Spare parts	
1	Sufficient number and correct type of spare parts available.
2	For power modules, need to check their age. If stock age is more than 1year, the DC capacitors need to be reformed later.
Power supply	
1	All auxiliary power supplies from external sources are switched on.
2	All internal circuit breakers of the drive are closed.
3	All grounding devices are removed.
4	All covers are mounted and the doors are closed, locked and / or bolted.
5	There is no run interlock active.
6	MCB is in operating position.

Start the drive following chapter of "Operation"

Attention:

- It is not allowed to start the drive if there is any condensing in drives. Make sure to heat and remove the condense and moisture in drives before drives are ready to SUPPLY ON.
- Reform DC-link capacitors in Power modules and spare power modules If the stock age more than 1 year following section *Reforming capacitor of power modules*.

ABB provide standard drive startup service package. 400-810-8885

13

Technical data

For the technical specifications of the drive, e.g. ratings sizes and technical requirements see the following documents:

For technical data, drive types and options refer to *ACS580MV Catalog*.

For mechanical layout, dimensions and required free space see *ACS580MV Base frame & TEU layout design*.

For motor and cable selection and for the technical requirements for the protection and control of the medium voltage supply refer to *ACS580MV Engineering Guideline*.

The list of available general documents is provided in *List of related manuals* on the inside of the front cover of this manual.

Further information

Product and service inquiries

Address any inquiries about the product to your local ABB representative, quoting the type designation and serial number of the unit in question. A listing of ABB sales, support and service contacts can be found by navigating to abb.com/searchchannels.

Product training

For information on ABB product training, navigate to new.abb.com/service/training.

Providing feedback on ABB Drives manuals

Your comments on our manuals are welcome. Navigate to new.abb.com/drives/manuals-feedback-form.

Document library on the Internet

You can find manuals and other product documents in PDF format on the Internet at abb.com/drives/documents.

abb.com/drives

© Copyright 2024 ABB. All rights reserved.
Specifications subject to change without notice.

2UBB004520 Rev K (EN) 2024-04-16