Original instructions

JSNY5

Safety interlock switch

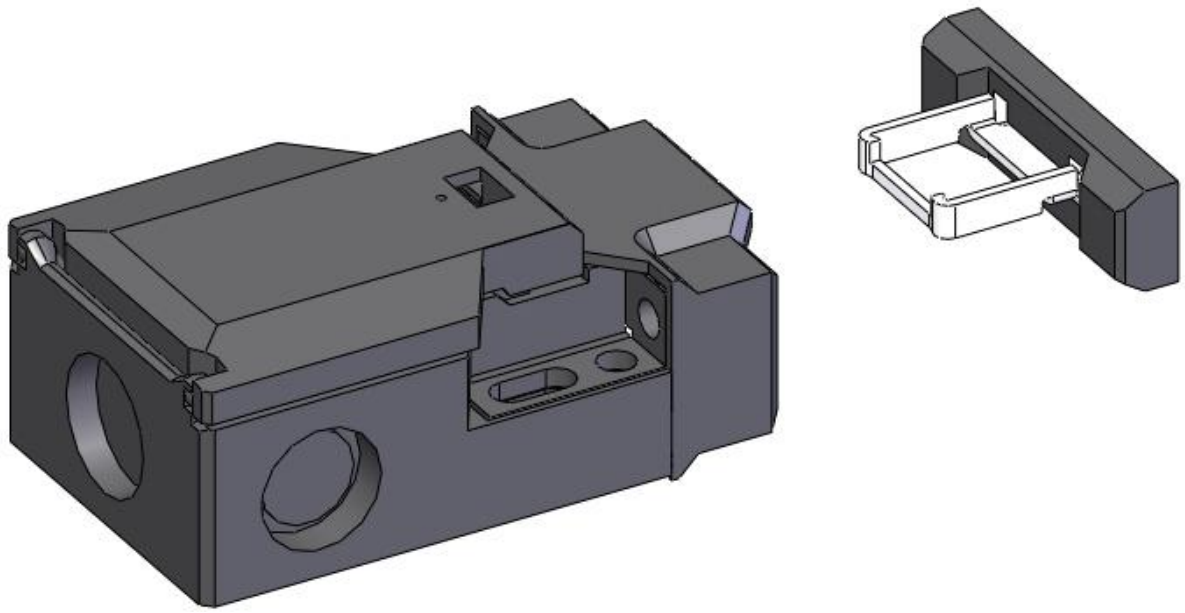

ABB AB / Jokab Safety Varlabergsvägen 11, SE-434 39 Kungsbacka, Sweden
www.jokabsafety.com

Read and understand this document

Please read and understand this document before using the products. Please consult your ABB/JOKAB SAFETY representative if you have any questions or comments.

WARRANTY

ABB/JOKAB SAFETY's exclusive warranty is that the products are free from defects in materials and workmanship for a period of one year (or other period if specified) from date of sale by ABB/JOKAB SAFETY.

ABB/JOKAB SAFETY MAKES NO WARRANTY OR REPRESENTATION, EXPRESSED OR IMPLIED, REGARDING NON-INFRINGEMENT, MERCHANTABILITY, OR FITNESS FOR PARTICULAR PURPOSE OF THE PRODUCTS, ANY BUYER OR USER ACKNOWLEDGES THAT THE BUYER OR USER ALONE HAS DETERMINED THAT THE PRODUCTS WILL SUITABLY MEET THE REQUIREMENTS OR THEIR INTENDED USE. ABB/JOKAB SAFETY DISCLAIMS ALL OTHER WARRANTIES, EXPRESSED OR IMPLIED.

LIMITATIONS OF LIABILITY

ABB/JOKAB SAFETY SHALL NOT BE RESPONSIBLE FOR SPECIAL, INDIRECT, OR CONSEQUENTIAL DAMAGES, LOSS OF PROFITS OR COMMERCIAL LOSS IN ANY WAY CONNECTED WITH THE PRODUCTS, WHETHER SUCH CLAIM IS BASED ON CONTRACT, WARRANTY, NEGLIGENCE, OR STRICT LIABILITY.

In no event shall responsibility of ABB/JOKAB SAFETY for any act exceed the individual price of the product on which liability asserted.

IN NO EVENT SHALL ABB/JOKAB SAFETY BE RESPONSIBLE FOR WARRANTY, REPAIR, OR OTHER CLAIMS REGARDING THE PRODUCTS UNLESS ABB/JOKAB SAFETY'S ANALYSIS CONFIRMS THAT THE PRODUCTS WERE PROPERLY HANDLED, STORED, INSTALLED, AND MAINTAINED AND NOT SUBJECT TO ABUSE, MISUSE, OR INAPPROPRIATE MODIFICATION OR REPAIR.

SUITABILITY FOR USE

ABB/JOKAB SAFETY shall not be responsible for conformity with any standards, codes, or regulations that apply to the combination of products in the customer's application or use of the product. At the customer's request, ABB/JOKAB SAFETY will provide applicable third party certification documents identifying ratings and limitations of use that apply to the products. This information by itself is not sufficient for a complete determination of the suitability of the products in combination with the end product, machine, system, or other application or use.

The following are some examples of applications for which particular attention must be given. This is not intended to be an exhaustive list of all possible uses of the products, nor is it intended to imply that the uses listed may be suitable for the products:

Outdoor use, uses involving potential chemical contamination or electrical interference, or conditions or uses not described in this document.

Nuclear energy control systems, combustion systems, railroad systems, aviation systems, medical equipment, amusement machines, vehicles, and installations subject to separate industry or government regulations.

Systems, machines, and equipment that could present a risk to life or property.

Please know and observe all prohibitions of use applicable to the products.

NEVER USE THE PRODUCTS FOR AN APPLICATION INVOLVING SERIOUS RISK TO LIFE OR PROPERTY WITHOUT ENSURING THAT THE SYSTEM AS A WHOLE HAS BEEN DESIGNED TO ADDRESS THE RISKS, AND THAT THE ABB/JOKAB SAFETY PRODUCT IS PROPERLY RATED AND INSTALLED FOR THE INTENDED USE WITHIN THE OVERALL EQUIPMENT OR SYSTEM.

PERFORMANCE DATA

While every effort has been taken to ensure the accuracy of the information contained in this manual ABB/JOKAB SAFETY cannot accept responsibility for errors or omissions and reserves the right to make changes and improvements without notice. Performance data given in this document is provided as a guide for the user in determining suitability and does not constitute a warranty. It may represent the result of ABB/JOKAB SAFETY'S test conditions, and the users must correlate it to actual application requirements. Actual performance is subject to the ABB/JOKAB SAFETY Warranty and Limitations of Liability.

Table of Contents

1 Introduction 4
Scope 4
Audience 4
Prerequisites 4
Special notes 4
2 Overview 5
General description 5
Safety regulations 5
Function description 6
3 Connections 7
4 Installation and maintenance 8
Installation 8
Installation precautions 10
Maintenance 10
5 Operation 11
6 Model overview 12
Accessories 12
7 Technical data 13
Dimensions 14
8 EC Declaration of conformity 15

1 Introduction

Scope

The purpose of these instructions is to describe the safety interlock switch JSNY5 and to provide the necessary information required for assembly, installation, checks and adjustments after installation, and maintenance. The instructions also include information necessary to connect JSNY5 to a safety circuit.

Audience

This document is intended for authorized installation personnel.

Prerequisites

It is assumed that the reader of this document has knowledge of the following:

- Basic knowledge of ABB/Jokab Safety products.
- Knowledge of safety devices and safety locks.
- Knowledge of machine safety.

Special notes

Pay attention to the following special notes in the document:

⚠ **Warning!**	Danger of severe personal injury! An instruction or procedure which, if not carried out correctly, may result in injury to the technician or other personnel.
Caution!	Danger of damage to the equipment! An instruction or procedure which, if not carried out correctly, may damage the equipment.
NB:	Notes are used to provide important or explanatory information.

2 Overview

General description

JSNY5 offers three contacts which give both the two contacts needed for high safety level as well as a contact for indication of operating status. The advanced design offers the choice of four operating positions from only two actuator entries by simply rotating the head through 180°.

However when installed and in its working condition only one entry can be used, ensuring no other element can tamper with the switch function.

Safety regulations

Warning!

Carefully read through this entire manual before using the device.

The devices shall be installed by a trained electrician following the Safety regulations, standards and the Machine directive.

Failure to comply with instructions, operation that is not in accordance with the use prescribed in these instructions, improper installation or handling of the device can affect the safety of people and the plant.

For installation and prescribed use of the product, the special notes in the instructions must be carefully observed and the technical standards relevant to the application must be considered.

In case of failure to comply with the instructions or standards, especially when tampering with and/or modifying the product, any liability is excluded.

Function description

When mounting the switch from the front, two elongated holes are provided to aid alignment with two set screw holes for accurate fixing. Top fixing is also possible. Two cable entries allow flexible cabling options including through wiring.

The design assures that the contacts will not fail or be held in a normally closed position, due to failure of the spring mechanism or the welding/sticking of the contacts.

To avoid unauthorised operation the JSNY5 switch is manufactured using multi coding to GS-ET 15. The switch cannot be defeated by screwdrivers, magnets or any other mechanism.

The positive forced disconnect contacts gives a high safety level. By combining the JSNY5 with one of our suitable safety relays like the RT-series, the safety PLC Pluto or Vital (Tina) the requirements for both hatch and gate switch supervision can be fulfilled. To obtain PL e, the highest safety level possible according to EN ISO 13849, two switches per gate are required.

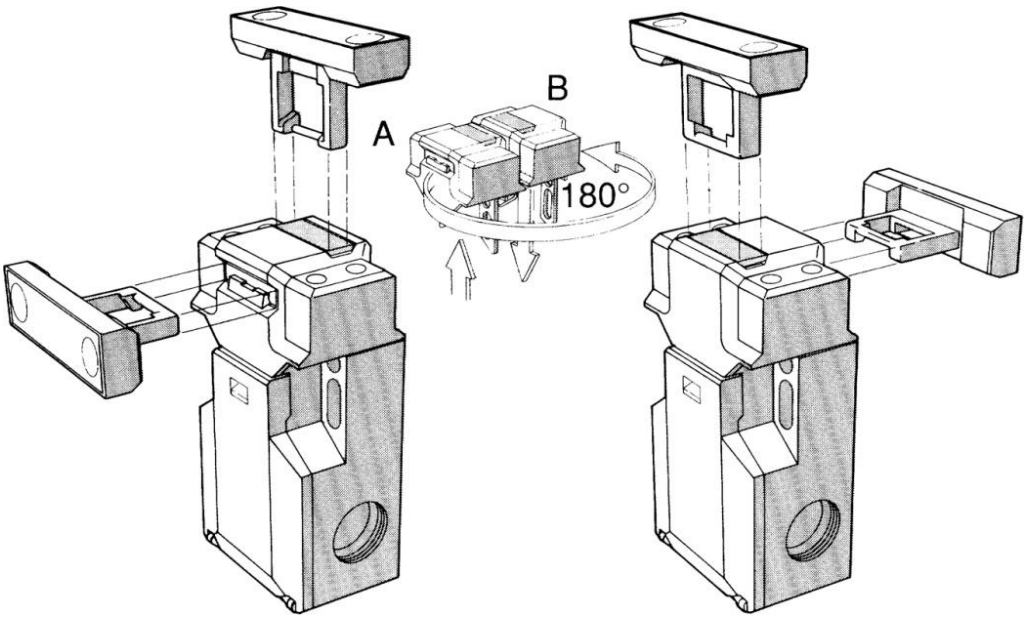

After opening the snap-on cover, the head portion can be removed (version A), after turning the head through 180° (version B) it can be replaced onto the body of the switch and be locked into position by closing the snap-on cover. This ensures 4 actuating positions are possible.

3 Connections

JSNY5 electrical connections

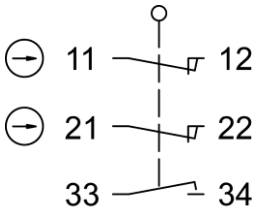

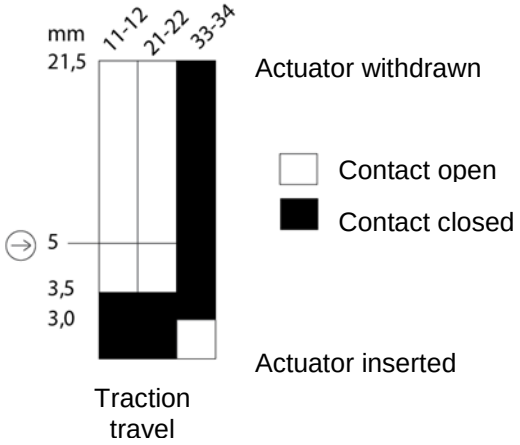

Positive forced disconnect contacts 11 – 12, 21 – 22

The two contacts 11 – 12 and 21 – 22 are positive forced disconnected, and should therefore be used for the safety function.

Overlapping contact 33 – 34

The overlapping contact 33 – 34 enables operational status indication of e.g. incorrect adjustment of switch before the positive forced disconnect NC contacts open.

4 Installation and maintenance

Installation

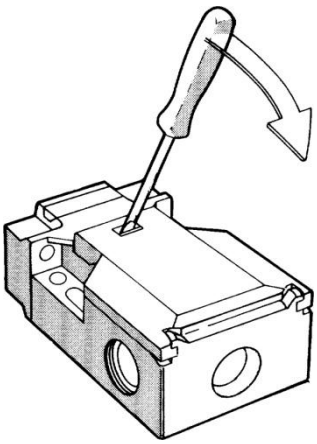

Use a screwdriver to release the snap-on cover. If the snap-on cover does not provide adequate security during operation, a retaining screw can be used to seal the cover.

The snap-on cover opens to an angle of 135°. A transparent cover protects the contact block from external elements during the installation and wiring process. Install the switch according to the electrical connection description.

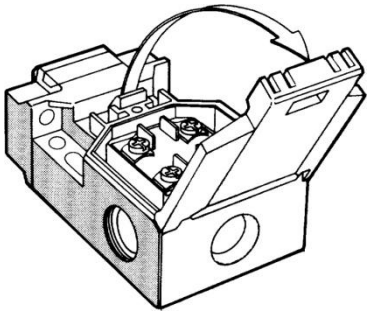

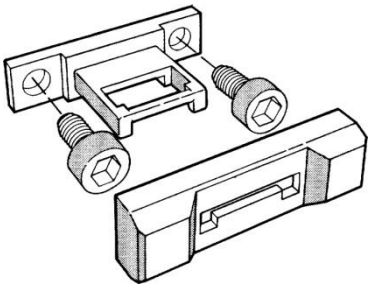

A cover plate with a one-way snap-fit which seals the mounting screws prevents unauthorised dismantling of the actuator assembly. The cover plate **must** be mounted as it also prevents over travel of the switching mechanism.

Fixing dimensions for all actuators 40 mm with M5 screw.

Minimum opening radius for the actuator when mounted on a hatch is 150 mm for a fixed actuator, or 50 mm in the adjustable direction for a flexible actuator.

Caution! The switch must not be used as an end stop!

⚠ **Warning**!

In order to maintain the safety level the safety switches may only be procured and used as an integral part of the associated actuator.

Application consideration must be given to the fixing of the actuator which has to be in a way that prevents disassembly by easy means.

Turning the cap

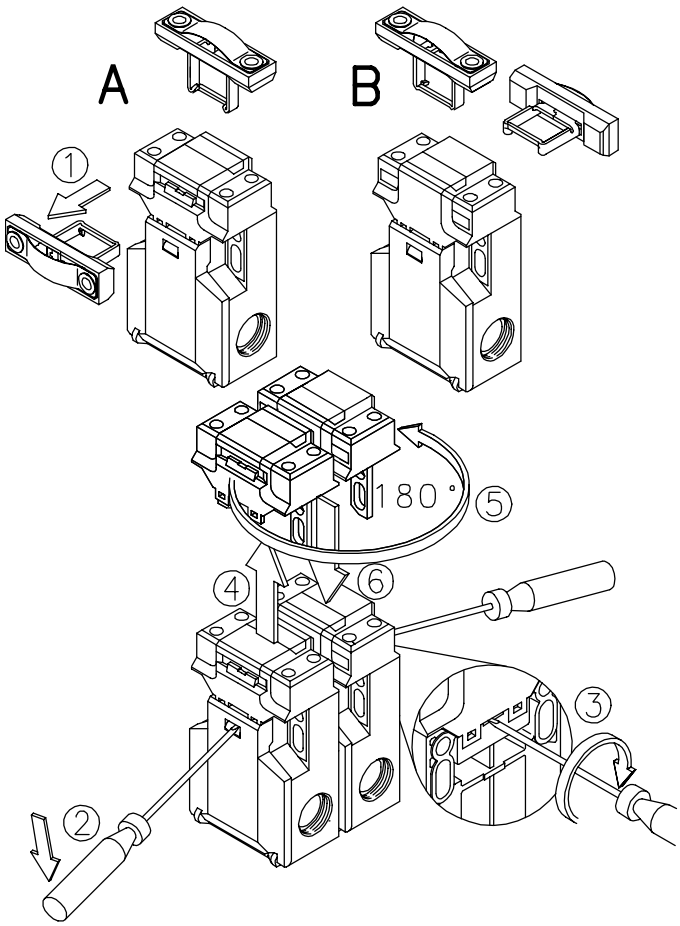

Mounting M20/M16 cable gland

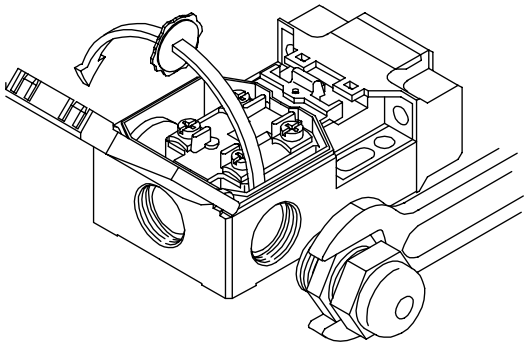

Connection type:

6 screw connectors M3

Conductor cross section:

Single core 0.5-1.5 mm^2 / Litz wire with connector sleeve 0.5-1.5 mm^2

1) Remove the actuator
2) Open cover
3) Snap off cover
4) Remove cap
5) Turn cap
6) Latch cap
7) For fixing the cap, close cover

Minimum safety distance

When using interlocking guards without guard locking to safeguard a hazard zone, the minimum allowed safety distance between the guarded opening and the hazardous machine must be calculated. In order to ensure that the hazardous machine motion will be stopped before it can be reached, the minimum safety distance is calculated according to EN ISO 13855 (“Positioning of safeguards with respect to the approach speeds of parts of the human body”).

The minimum safety distance is calculated according to the formula:

S = (K x T) + C

Where

S = minimum safety distance (mm)

K = approach speed of a human body; 1600 mm/s

T = the total time from opening of the guard until the hazardous machine movement has stopped, i.e. including control system reaction times and other delays (s)

C = a safety distance taken from Table 4 or Table 5 of EN ISO 13857:2008, if it is possible to push fingers or a hand through the opening towards the hazard before a stop signal is generated

NB: In some cases, T might be reduced by the opening time of the guard until the opening size permits access of the relevant parts of the body. Refer to EN ISO 13855 for further details and EN ISO 13857 for specified values.

Installation precautions

- The safety switch may not be used as a mechanical stop!
- Make sure that the head is properly attached to the switch body. A misaligned or loose head can lead to loss of the safety function.
- The device must be mounted on a plane surface.

⚠ **Warning!** All the safety functions must be tested before starting up the system.

Maintenance

⚠ **Warning!**

The safety functions and the mechanics shall be tested regularly, at least once every year to confirm that all the safety functions are working properly (EN 62061:2005).

In order to maintain the safety level, regular inspections for tear and wear, as well as fixing and alignment of switch, actuator, brackets, doors etc should be carried out.

In case of breakdown or damage to the product, contact the nearest ABB/Jokab Safety Service Office or reseller. Do not try to repair the product yourself since it may accidentally cause permanent damage to the product, impairing the safety of the device which in turn could lead to serious injury to personnel.

5 Operation

The N.C. contacts are closed when the actuator is inserted into the switch head, and opened as soon as the actuator is withdrawn. The force required to insert the actuator into or extract the actuator out of the switch head depend on the model.

Actuating forces

Extraction force
JSNY5A = approx. 10N
JSNY5B = approx. 30N

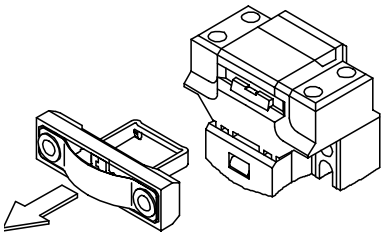

Actuator insertion force
Force Eject FE
Actuator will be ejected automatically
F = min. 10N

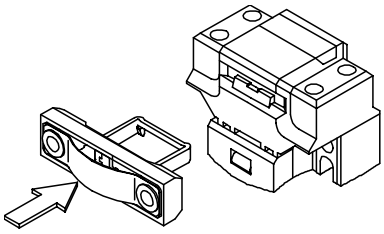

6 Model overview

Type	Article number	Description
JSNY5A	2TLJ020022R0000	JSNY5A. Holding force 10 N.
JSNY5B	2TLJ020022R0100	JSNY5B. Holding force 30 N.

Accessories

Note that all brackets come with nuts and screws for use with ABB/Jokab Safety Quick-Guard fencing system. For further information, contact your local ABB/Jokab Safety sales office.

Type	Article number	Description
Spare part	2TLJ020032R0000	Steel key for JSNY5
Accessory	2TLJ020032R0600	Flexible key for JSNY5
Spare part	2TLJ020033R0000	Lid for JSNY5
Accessory	2TLJ020054R0100	Tina 2A with M20 connection for dynamic loop
Accessory	2TLJ020054R1100	Tina 2B with cable connection
Accessory	2TLJ020054R0200	Tina 3A with M12 and M20 connections for dynamic loop

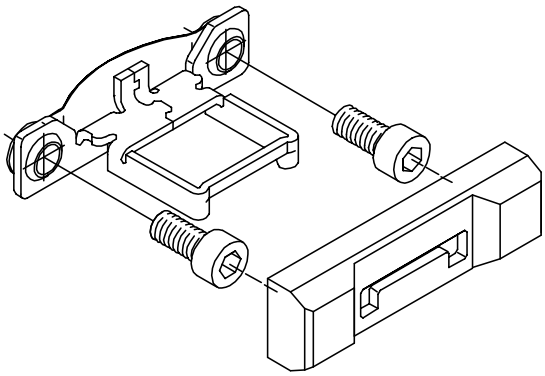

Steel key for JSNY5
Article number: 2TLJ020032R0000

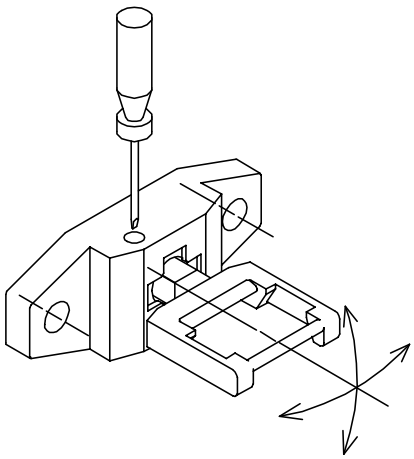

Flexible key for JSNY5
Article number: 2TLJ020032R0600

7 Technical data

Manufacturer	
Address	ABB AB / JOKAB SAFETY Varlabergsvägen 11 SE-434 39 Kungsbacka Sweden
Electrical characteristics	
Utilization category	AC-15 / DC-13
Rated insulated voltage	400 VAC
Rated operational current	5 A
Short circuit protection (fuse)	6 A slow 16 A fast
General	
Protection class	IP65
Ambient temperature	-30…+80°C
Size	See drawing
Holding force	Insertion/extraction force according to figures
Weight	Approx 0.13 kg
Material	Enclosure/cover: PA 6 (UL94-VO) Actuator: Steel
Colour	Black with yellow label
Contacts (actuator in)	2 NC + 1 NO (NC are direct opening action)
Cable entry	2 x M20 x 1.5
Fixing	Body: 2 x M5 Actuator: 2 x M5
Mechanical life	JSNY5A: 10^6 switch operations JSNY5B: 10^5 switch operations
Max. switching frequency	30/min
Min. opening radius for actuator on a hatch	Fixed actuator: 150 mm Flexible actuator: 50 mm (adjustable direction)
Max. approach speed	0.2 m/s
Safety / Harmonized standards	
Conformity	European Machinery Directive 2006/42/EC CE EN ISO 12100-1:2003+A1:2009, EN ISO 12100-2:2003+A1:2009, EN 954-1:1996/EN ISO 13849-1:2008, EN 1088+A2:2008, EN 60204-1:2006+A1:2009 VDE 0660 T100, EN 60947-1, VDE 0660 T200, EN 60947-5-1, GS-ET 15
EN ISO 13849-1	Category 1 B_{10d}: 2,000,000
Certifications	CSA

NB: A single JSNY5 can achieve performance level PL c according to EN ISO 13849 if used correctly with an ABB/Jokab Safety safety relay, Pluto safety-PLC or Vital safety module. If two JSNY5-switches are used for the same safety function, a performance level up to PL e can be achieved. Refer to EN ISO 13849 for details on how to achieve this if necessary.

Dimensions

JSNY5 dimensions

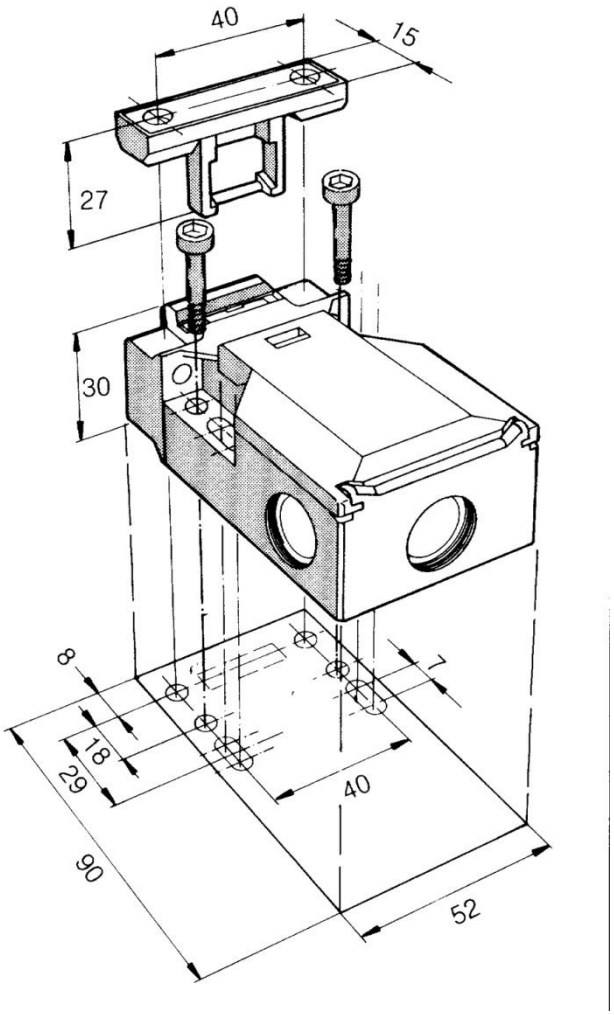

NB: All measurements in millimetres.

8 EC Declaration of conformity

ABB

EC Declaration of conformity

(according to 2006/42/EC, Annex 2A)

We ABB AB JOKAB Safety Varlabergsvägen 11 SE-434 39 Kungsbacka Sweden	declare that the safety components of ABB AB manufacture with type designations and safety functions as listed below, is in conformity with the Directive 2006/42/EC
Authorised to compile the technical file	ABB AB JOKAB Safety Varlabergsvägen 11 SE-434 39 Kungsbacka Sweden

Product

Safety interlock switch JSNY5

Used harmonized standards	EN ISO 12100:2010, EN ISO 13849-1:2008, EN 1088+A2:2008, EN 60204-1:2006+A1:2009

Jesper Kristensson
PRU Manager
Kungsbacka 2012-05-16

www.abb.com
www.jokabsafety.com

Original