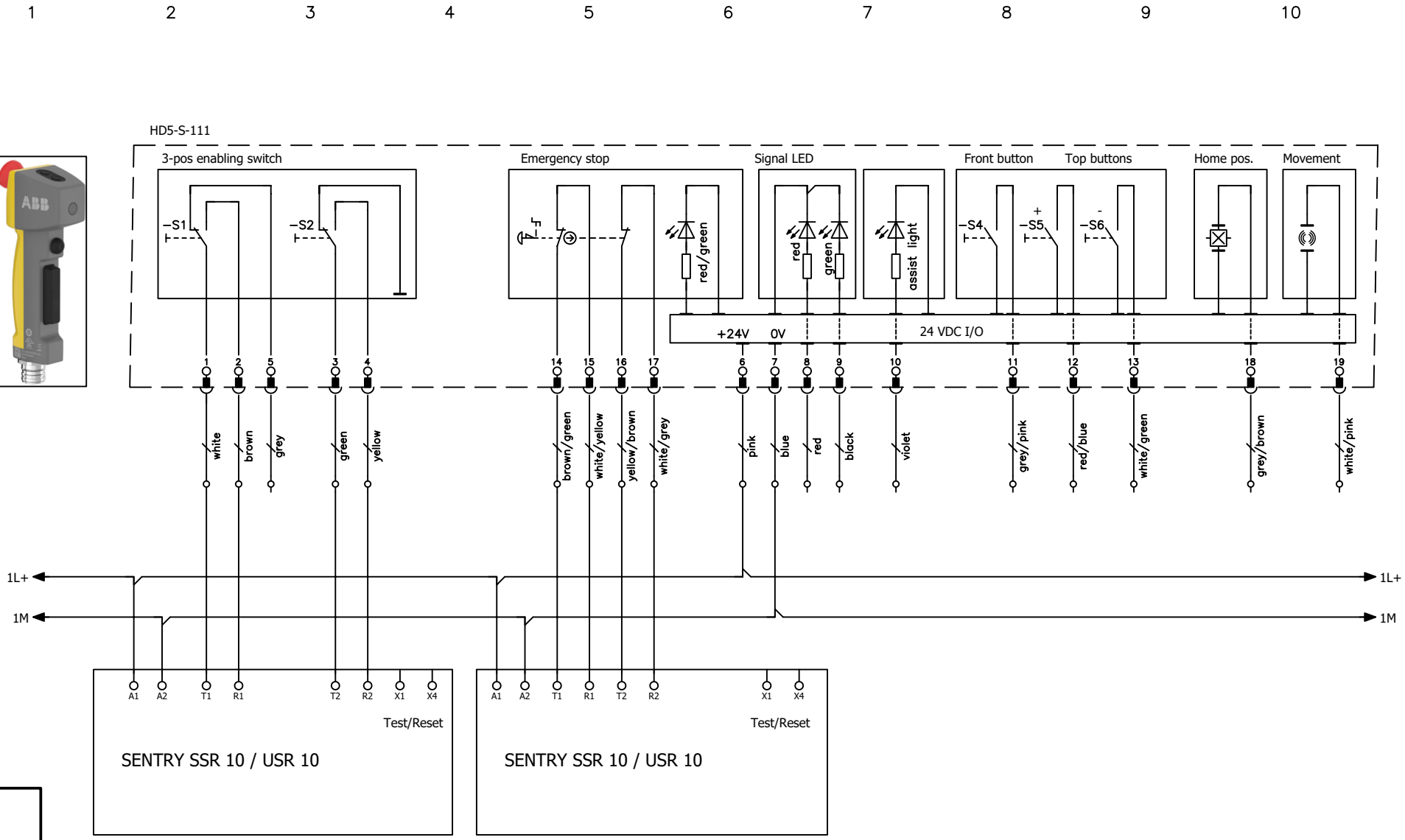

PLe
According to
EN ISO 13849-1

Note: The stated PL is only valid if all relevant requirements according to EN ISO 13849-1/-2 are met. It is the responsibility of the machine builder to make a risk assessment and make sure that the appropriate functional safety levels are achieved.

Anmärkning Remark		Konstr Design	Godk Appr	Datum Date	Blad Sheet
SSR10/USR10 with HD5-S-111	ABB Safety Products	ABB		20230428	
		Ritad Drawn	Sidor Pages	Ritn nr Drawing no	Forts Cont
		ABB		2TLC010007T0106	