MEDIUM VOLTAGE PRODUCT

AdvaSense™ KECA 80 C184; KECA 80 C216

Indoor current sensor

—
01 Sensor chaacteristics

Parameters for Application	Value
Rated primary current of application	up to 4 000 A

Sensor Parameters	Value
Highest voltage for equipment, U_m	0.72 kV
Rated primary current, I_{pr}	80 A
Rated continuous thermal current, I_{cth}	4 000 A
Rated transformation ratio, K_{ra}/K_r	80 A/ 150 mV at 50 Hz 180 mV at 60 Hz
Accuracy class: - IEC 60044-8 - IEC 61869-10	 0.5/5P400 0.5/5P1060-A2
Length of cable	5 m

Sensor principles

The current sensors (Electronic current transformers according to IEC 60044-8 and low-power passive current transformers according to IEC 61869- 10 standards) type KECA 80 C184 and KECA 80 C216 offer an alternative way of making the current measurements needed for the protection and monitoring of medium voltage power systems.

AdvaSense™ sensors based on alternative principles have been introduced as successors to conventional instrument transformers in order to significantly reduce size, increase safety, and to provide greater rating standardization and a wider functionality range. These well known principles can only be fully utilized in combination with versatile electronic relays.

Sensor characteristics

Construction of ABB's AdvaSense™ current sensors is done without the use of a ferromagnetic core. This fact results in several important benefits for the user and the application. The main benefit is that the behavior of the sensor is not influenced by non-linearity and width of hysteresis curve, which results in a highly accurate and linear response over a wide dynamic range of measured quantities.

A linear and highly accurate sensor characteristic in the full operating range enables the combination of metering and protection classes in one winding. With KECA 80 Cxxx sensors measuring **class 0.5** is reached for continuous current measurement in the extended accuracy range from 5% of the rated primary current I_{pr} **not only up to 120% of I_{pr}** (as being common for conventional current transformers), **but even up to the rated continuous thermal current I_{cth}**. For dynamic current measurement (protection purposes) the ABB sensors KECA 80 Cxxx fulfill requirements of protection class **5P up to an impressive value reaching 85 kA**. That provides the possibility to designate the corresponding accuracy class as **0.5/5P400 (IEC 60044-8) or 0.5/5P1060-A2 (IEC 61869-10)** , proving excellent linearity and accuracy measurements.

Current sensor

Current measurement in KECA 80 Cxxx sensors is based on the Rogowski coil principle. A Rogowski coil is a toroidal coil, without an iron core, placed around the primary conductor in the same way as the secondary winding in a current transformer. However, the output signal from a Rogowski coil is not a current, but a voltage (see fig. 02).

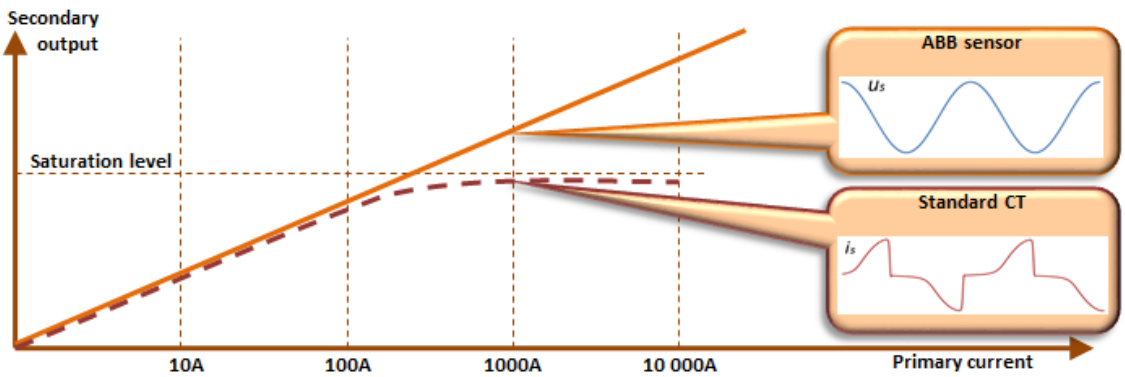

—
01

—
02 Rogowski coil principle
—
03 IED and sensor
—
04 Current sensors installed in MV air insulated switchgear UniGear ZS1 24 kV

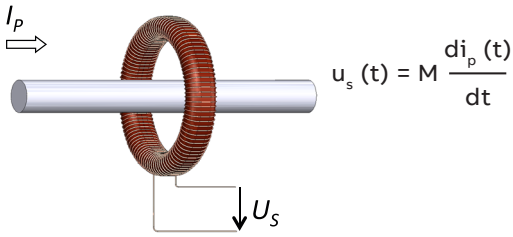

—
02

In all cases, a signal that represents the actual primary current waveform is easily obtained by integrating the transmitted output signal.

Protection and control IEDs (Intelligent Electronic Devices)
Protection and control IEDs incorporate the functions of a traditional relay, as well as allow new additional functions. The information transmitted from the sensors to the IED is very accurate, providing the possibility of versatile relay functionality.

However, the IED must be able to operate with sufficient accuracy at a sensor's low input signal level, and the signal from the Rogowski coil must be integrated. Modern IEDs (such as ABB's 615 series relays) are designed for such sensor use, and they are also equipped with built-in integrators for Rogowski coil sensor inputs. Modern digital apparatuses (microprocessor based relays) allow protection and measurement functions to be combined. They fully support current sensing realized by the single sensor with double the accuracy class designation, e.g.: current sensing with combined accuracy class 0.5/5P400 (IEC 60044-8) or 0.5/5P1060-A2 (IEC 61869-10).

—
03

Sensor applications
The current sensors type KECA 80 Cxxx are intended for use in current measurement in medium voltage air insulated switchgear type UniGear ZS1 24 kV.

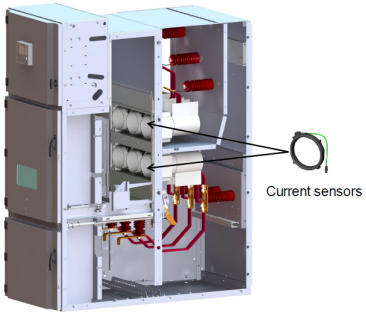

—
04

Differences between Sensors and Instrument Transformers
There are some noticeable differences between Sensors and conventional Instrument Transformers:

Linearity
Due to the absence of a ferromagnetic core the sensor has a linear response over a very wide primary current range, far exceeding the typical CT range. Thus, current sensing for both measurement and protection purposes could be realized with single secondary winding with a double rating. In addition, one standard sensor can be used for a broad range of rated currents and is also capable of precisely transferring signals containing frequencies different from rated ones.

For this type of sensor, the variation of amplitude and phase error or composite error in a current range from 5% of rated primary current I_{pr} up to 85 kA is within the limits specified by IEC 61869-10.

Example of current measurement range with rated current 80 A and accuracy class 0.5/5P400 (IEC 60044-8) or 0.5/5P1060-A2 (IEC 61869-10):
Metering accuracy class 0.5 is, according to the IEC 60044-8 and IEC 61869-10 standards, guaranteed from 5% of I_{pr} up to $K_{pcr} \times I_{pr}$ where K_{pcr} is rated extended primary current factor and I_{pr} is rated primary current. Factor K_{pcr} is in the case of conventional CTs usually just 1.2, but in the case of the KECA 80 Cxxx sensors the K_{pcr} factor is several times higher and equals 15.625 (IEC 60044-8) or 50 (IEC 61869-10) for KECA 80 C184 and 39.375 (IEC 60044-8) or 50 (IEC 61869-10) for KECA 80 C216 .

Protection accuracy class 5P400 or 5P1060-A2 is guaranteed, for the advanced KECA 80 Cxxx sensors, from the current equal to $K_{pcr} \times I_{pr}$ up to the current corresponding to $K_{alf} \times I_{pr}$ value, where K_{alf} is, according to IEC 60044-8 and IEC 61869-10, the accuracy limit factor.

For this type of sensors the value of $K_{pcr} \times I_{pr}$ is equal to the rated continuous thermal current I_{cth} (4 000 A) and the value of $K_{alf} \times I_{pr}$ is equal to 85 kA.

—
05 Example of combined accuracy class.

—
06 Example of sensor label (IEC 60044-8)

—
07 Example of a sensor label (IEC 60044-8 with UL certification) - Upper label - part of accessories, to be glued to Switchgear - Bottom label with UL logo - placed on sensor

—
08 Example of a sensor label (IEC 61869-10)

The accuracy limits are described on the graph below.

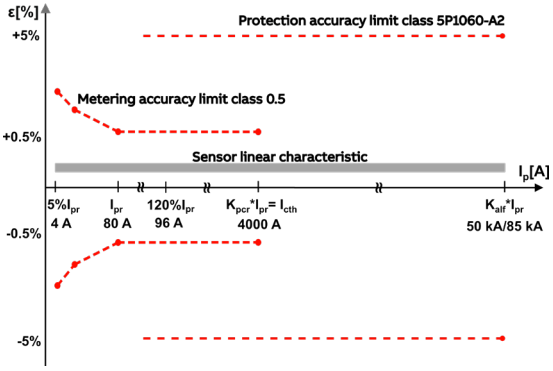

—
05

Compactness

Since the sensing elements are particularly small, and the same elements are used for both measurement and protection, the current sensors can be easily integrated into the switchgear. These facts enable the design of sensors in a very optimal way which contributes to high level of switchgear simplification.

Rated parameters

Because the sensors are highly linear within a very wide range of currents, the same single sensor can be used for the various rated currents associated with each specific application up to the specified maximum voltage for equipment. There is no need to specify other parameters such as burden, safety factor, etc. since they are standard over the defined range. To achieve the correct function of the protection and control IED, the selected rated current, as well as the rated transformation ratio, must be properly set into the IED.

Energy savings concept

As there is no iron core, no necessity for high burden values and thus a possibility for low current losses and only one secondary winding needed, KECA 80 Cxxx sensors exhibit extremely low energy consumption that is just a fraction of that transferred to heat in conventional CTs. This fact contributes to huge energy savings during its entire operating life, supporting the world-wide effort to reduce energy consumption.

Correction factors

The amplitude and phase error of a current sensor is, in practice, constant and independent of the primary current. Due to this fact it is an inherent and constant property of each sensor and it is not considered as unpredictable and influenced error. Hence, it can be easily corrected in the IED by using appropriate correction factors, stated separately for every sensor. Values of the correction factors for the amplitude and phase error of a current sensor are mentioned on the sensor label (for more information please refer to Instructions for installation, use and maintenance) and should be uploaded without any modification into the IED before the sensors are put into operation (please check available correction in the IED manual). To achieve required accuracy classes it is recommended to use all correction factors: amplitude correction factor (al/CFI) and phase error correction factor (pl/$\varphi_{0\,cor}$) of a current sensor.

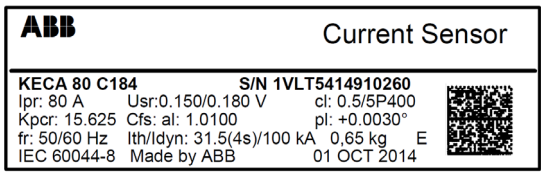

—
06

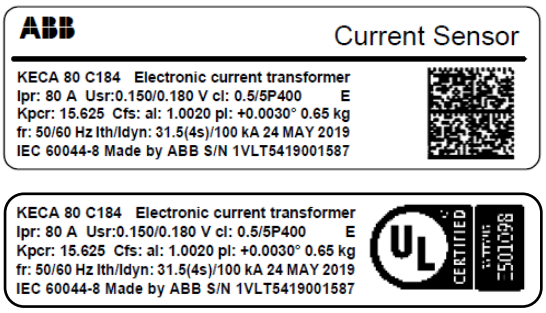

—
07

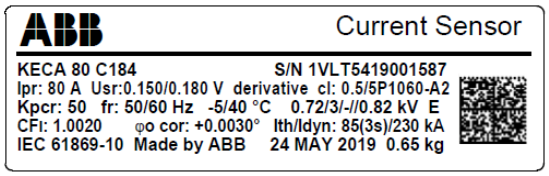

—
08

Secondary cables

The sensor is equipped with a cable for connection with the IED. The cable connector is type RJ45. The sensor accuracy classes are verified up to the RJ45 connector, i.e. considering also its secondary cable. These cables are intended to be connected directly to the IED, and subsequently neither burden calculation nor secondary wiring is needed. Every sensor is therefore accuracy tested when equipped with its own cable and connector.

—
09

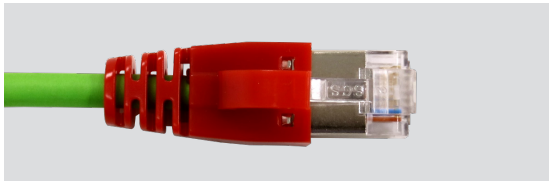

—
10

—
09 Connector RJ45 (IEC 60044-8)

—
10 Connector RJ45 (IEC 61869-10)

Connector adapters
To provide connectivity between a sensor with a RJ45 cable connector and IEDs with Twin-BNC connectors a group of adapters were designed. To provide connectivity between current and voltage sensors with RJ45 cable connectors and IEDs with RJ45 connector the coupling adapter was designed.The use of connector or coupling adapters has no influence on the current and/or voltage signal and accuracy of the sensor with the cable. For more information about connector adapters and coupling adapter refer to Doc. No. 1VLC000710 - Sensor accessories.

Standards
- IEC 60044-8 (2002-07) Instrument transformers Part 8: Electronic current transformers
- IEC 61869-10 (2017-12) Instrument transformers Part 10: Additional requirements for low-power passive current transformers

Certifications
KECA 80 C184 - UL certified
(UL file number E501098)

Highest voltage for equipment and test voltages
- Highest voltage for equipment, U_m: 0.72 kV
- Power frequency voltage withstand test on primary terminals: 3 kV

Insulation requirements for secondary terminals according to IEC 61869-10
- Power frequency voltage withstand capability: 0.82 kV
- Impulse voltage withstand capability: 1.5 kV 1.2/50 µs

Current sensor, rated values
- Rated primary current, I_{pr}: 80 A
- Rated transformation ratio, K_{ra}/K_r:
  80 A/0.150 V at 50 Hz
  80 A/0.180 V at 60 Hz
- Rated secondary output, U_{sr}: 3 mV/Hz
  i.e. 150 mV at 50 Hz
  or 180 mV at 60 Hz
- Rated continuous thermal current, I_{cth}:
  up to 4 000 A
- Rated short-time thermal current, I_{th}:
  IEC 60044-8 31.5 kA/4s
  IEC 61869-10 85 kA/3s
- Rated dynamic current, I_{dyn}:
  IEC 60044-8 100 kA
  IEC 61869-10 230 kA
- Rated frequency, f_r: 50/60 Hz
- Rated extended primary current factor, K_{pcr}:
  50
- Accuracy limit factor, K_{alf}:
  IEC 60044-8 400
  IEC 61869-10 1060
- Accuracy class:
  - IEC 60044-8 0.5/5P400
  - IEC 61869-10 0.5/5P1060-A2
- Rated burden, R_{br}:
  - IEC 60044-8 10 MΩ
  - IEC 61869-10 2 MΩ; 50 pF

Temperature category
- Operation: -25°C/+80°C
- Transport and storage: - 40°C/+80°C

Cable
- Length: 5 m
- Connector: RJ45 (CAT-6)

Optional accessory KECA 80 C184
- Clamping system: 2RKA024750A0001

Type	Sensor ordering data		
	IEC 60044-8	IEC 60044-8 + UL certification	IEC 61869-10
KECA 80 C184	1VL5400072V0101	1VL5400072V0201	1VL5400072V1101
KECA 80 C216	1VL5400073V0101	-	1VL5400073V1101

Dimensional drawing

KECA 80 C184

Outline drawing number: 2RKA017253A0001
Weight: 0.65 kg

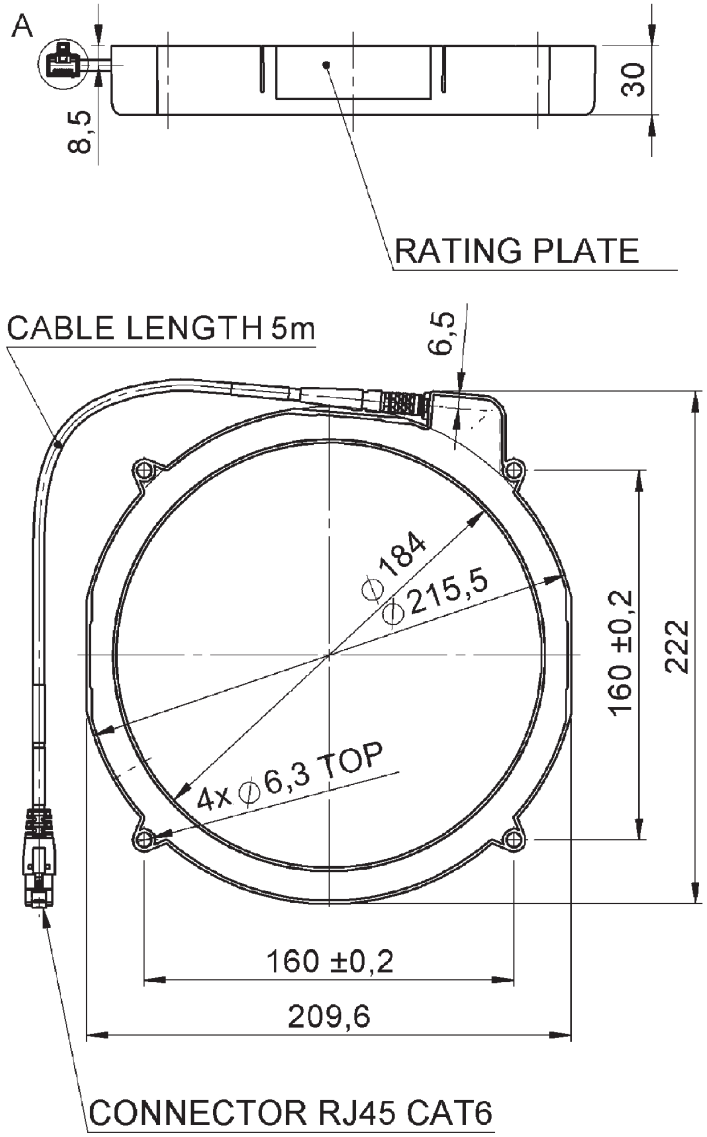

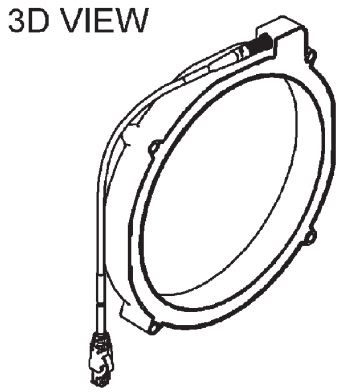

CONNECTOR RJ45 CAT6
IEC 60044-8

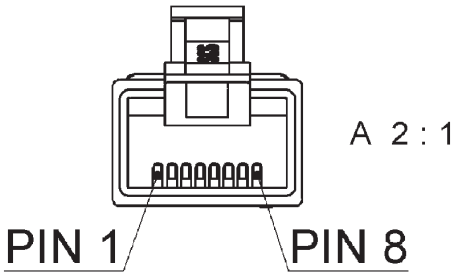

PIN 4 - COIL START (S1)
PIN 5 - COIL END (S2)

CONNECTOR RJ45 CAT6
IEC 61869-10

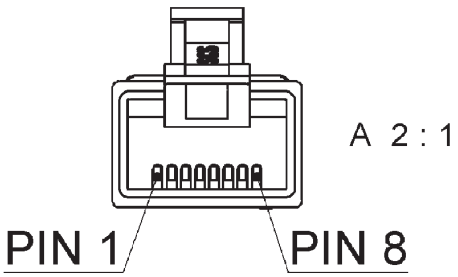

PIN 1 - COIL START (S1)
PIN 2 - COIL END (S2)

Dimensional drawing

KECA 80 C216

Outline drawing number: 2RKA017322A0001
Weight: 0.95 kg

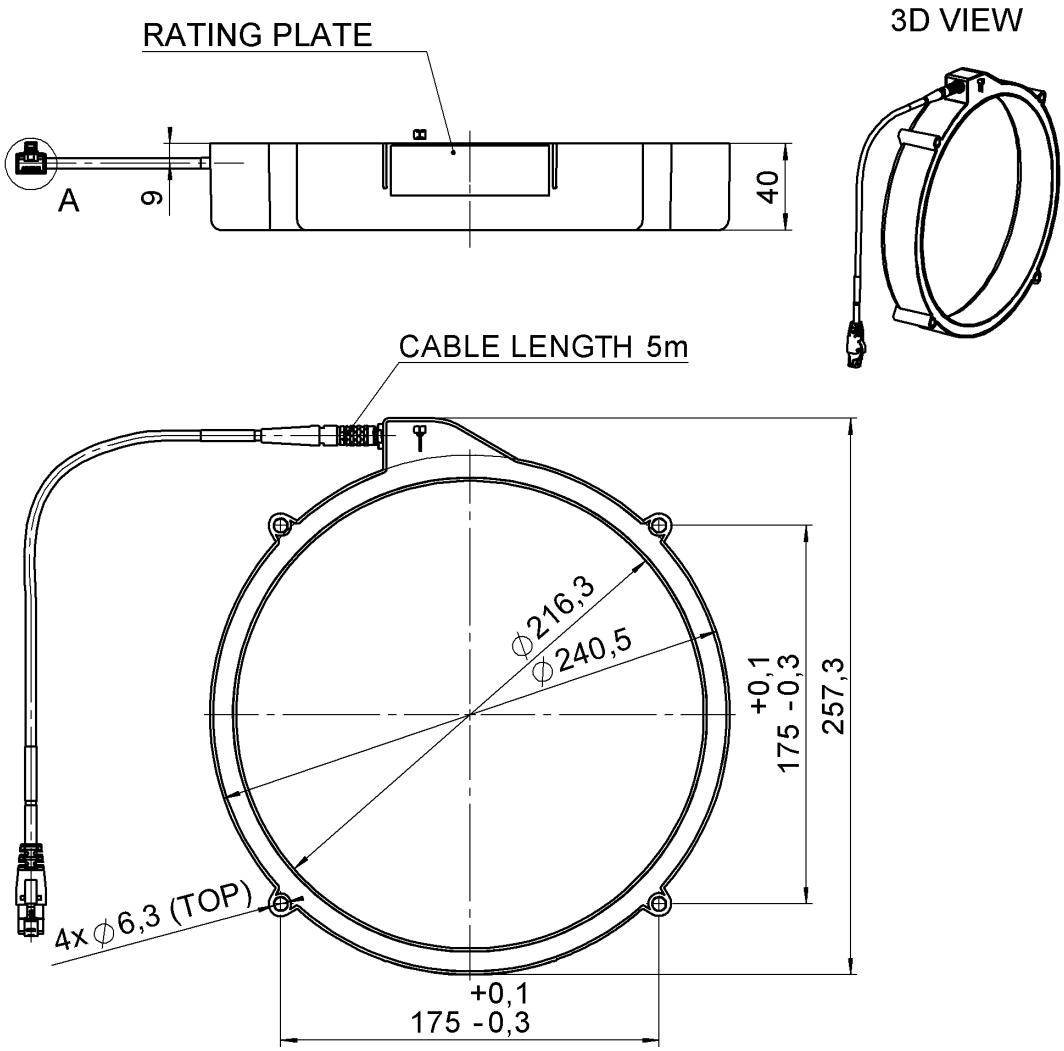

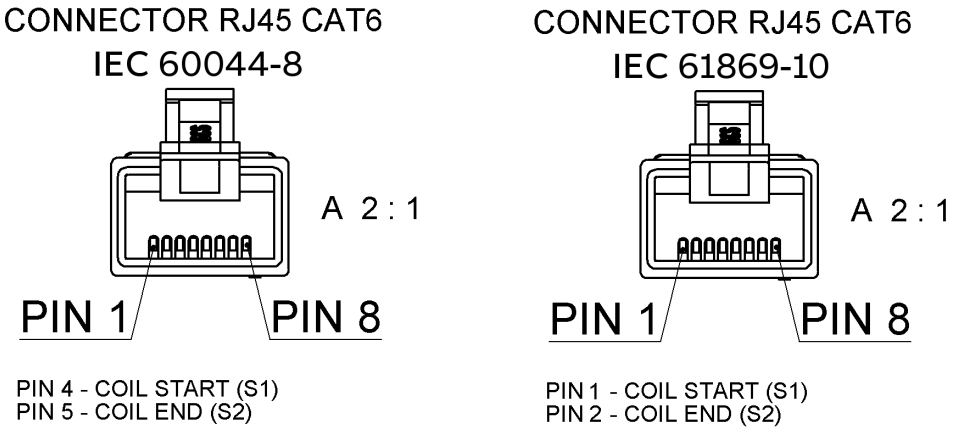

PIN 4 - COIL START (S1)
PIN 5 - COIL END (S2)

PIN 1 - COIL START (S1)
PIN 2 - COIL END (S2)

CONTACT US

ABB s.r.o.
ELDS Brno
Videnska 117, 619 00 Brno,
Czech Republic
Tel.: +420 547 152 021
+420 547 152 854
Fax: +420 547 152 626
E-mail: kontakt@cz.abb.com

www.abb.com

NOTE

We reserve the right to make technical changes or modify the contents of this document without prior notice. With regard to purchase orders, the agreed particulars shall prevail. ABB does not accept any responsibility whatsoever for potential errors or possible lack of information in this document.

We reserve all rights in this document and in the subject matter and illustrations contained therein. Any reproduction, disclosure to third parties or utilization of its contents - in whole or in parts - is forbidden without prior written consent of ABB.

Copyright© 2023 ABB
All rights reserved

1VLC000720,Rev.4, en 2023.10.09