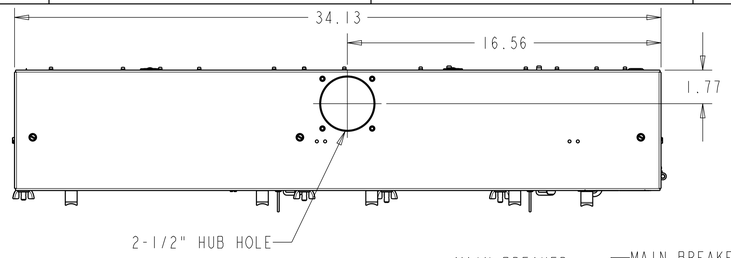
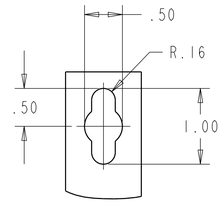
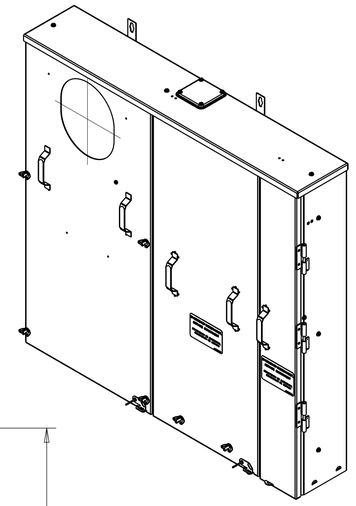
3D Model is the Master Document of Record
Article or Material Must Conform to RCMA Procedure S1000000 Sec.14
Article or Material Must Conform to RCMA Procedure S1000000 Sec.13
Part Must Conform to S1000005 Sec.4 Toxicity Procedure
Cosmetic Conditions & Functionality to per SOMC 11.5.2006

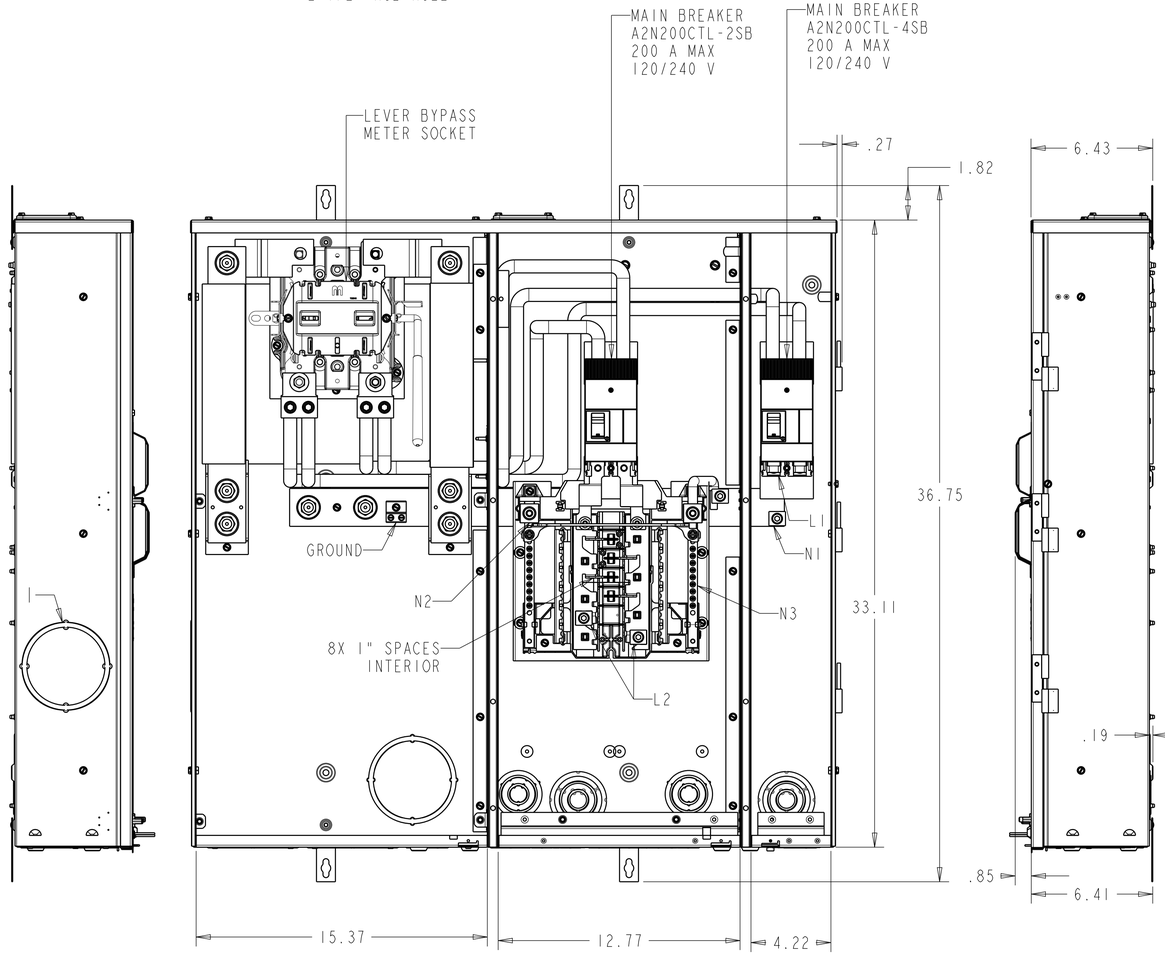


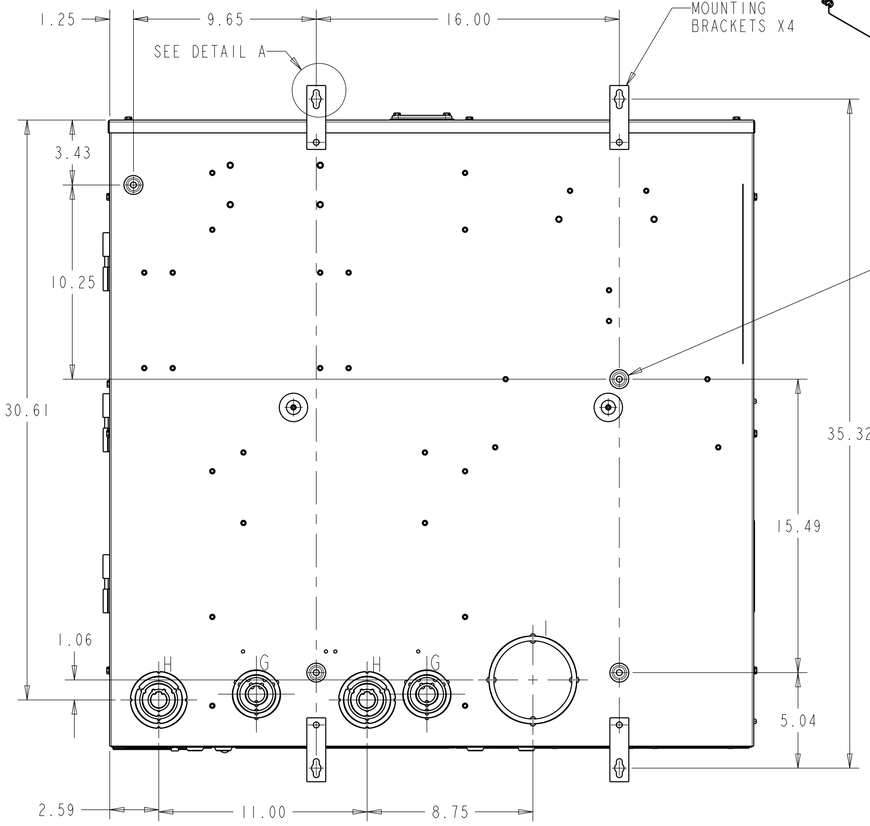
LUG TIGHTENING TORQUE (LB-IN)		
SCREW TYPE	WIRE SIZE	TORQUE
SLOTED	14-10	35
	8	40
	6/4	45
	3-2/0	50
INTERNAL HEX	3/16 ACROSS FLATS	120
	1/4 ACROSS FLATS	200
	5/16 ACROSS FLATS	275

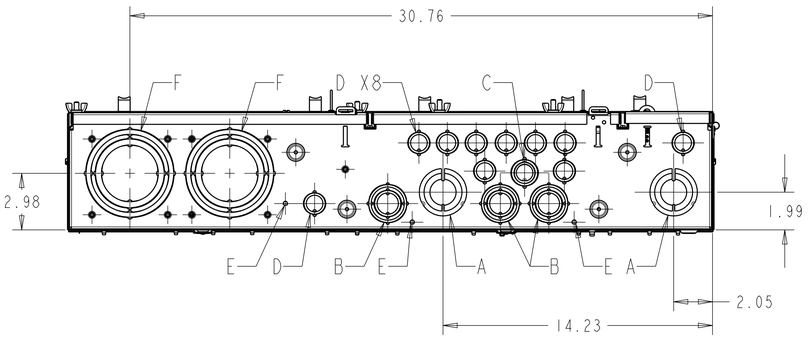


DETAIL A
SCALE 1.000









LETTER	DESCRIPTION	QTY.
A	1 X 1 1/2 X 2 KO	2
B	3/4 X 1 X 1 1/4 X 1 1/2 KO	3
C	1/2 X 3/4 X 1 KO	1
D	1/2 X 3/4 KO	10
E	9/32 KO	3
F	2 1/2 X 3 X 3 1/2 X 4 KO	2
G	1/2 X 3/4 X 1 1/4 X 1 1/2 X 2 KO	2
H	1/2 X 3/4 X 1 1/4 X 1 1/2 X 2 X 2 1/2 KO	2
I	3 1/2 X 4 KO	2

Note : All Dimensions have ±0.125 Tolerance

CAT NO.	MODEL
TSDR830USCU	03

CIRCUIT PROTECTION
A2N200CTL-2SB - 2 LUG KIT
A2N200CTL-4SB - 4 LUG KIT

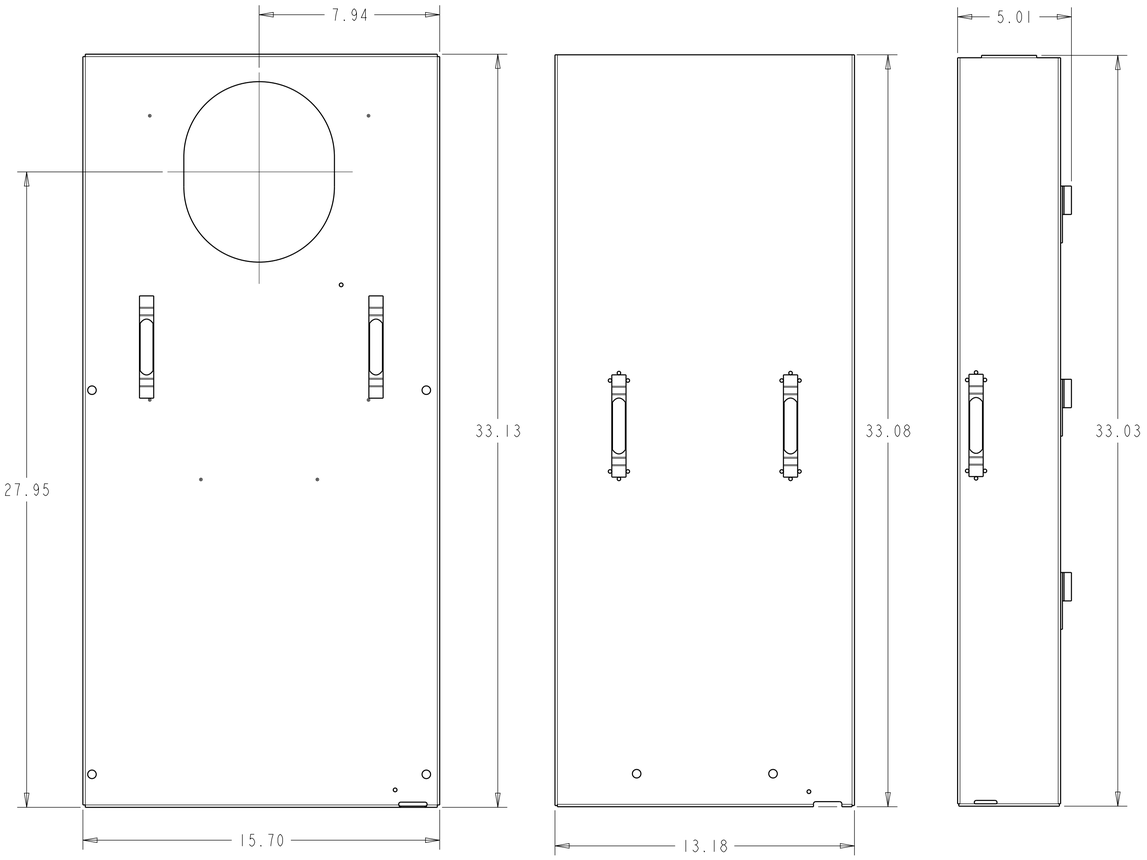
WIRE RANGE				
CONNECTOR	COPPER		ALUMINIUM	
	SOLID	STRANED	SOLID	STRANED
NEUTRAL-N1	- -	1-300	- -	1-300
NEUTRAL-N2	6-2/0	6-2/0	14-1/0	14-1/0
NEUTRAL-N3	14-4	14-4	12-4	12-4
LOAD 1	- -	1-300	- -	1-300
GROUND	6-2/0	6-2/0	6-2/0	6-2/0

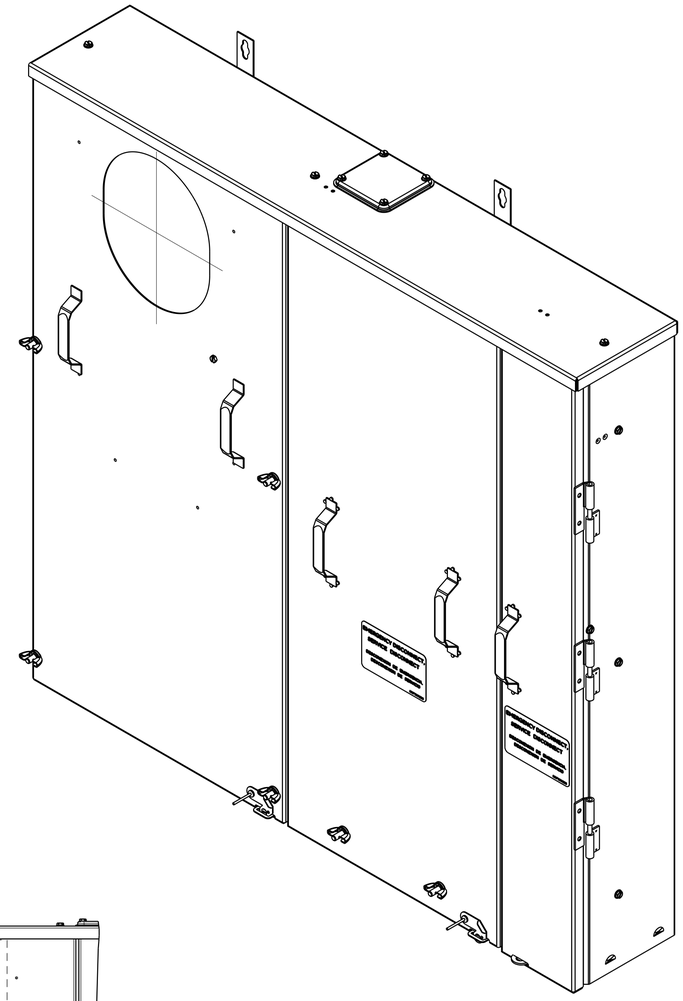
ABB PROPRIETARY AND CONFIDENTIAL INFORMATION
The information contained in this document is to be kept strictly confidential.
Any unauthorized use, duplication, modification, distribution or disclosure of this material is strictly forbidden.
ABB reserves all rights regarding intellectual Property Rights.
Copyright 2021 ABB. All rights reserved

Third Angle Projection

DRAWING FILE: TSDR830USCUM03_OD	MODEL FILE: TSDR830USCUM03	ABB	
DATE MODIFIED: 2023-03-24	DESIGNED BY: GERARDO RODRIGUEZ		
Calculated for: VOLUME: 0.000 M^3	CN#: CR0000137584	APPROVED BY: GERARDO MORONES	TITLE: TSDR830USCUM03 NEC 2020 OUTLINE DRAWING
	◇ Critical to Quality Characteristic		
MASS: 0.000 Kg	MATERIAL SPECIFICATION: ---	FINISH SPECIFICATION: ---	UNITS: IN / LOCAL TITLE: TSDR830USCUM03
UNLESS OTHERWISE SPECIFIED TOLERANCE ON: 1 PL DECIMALS ± 0.1, 2 PL DECIMALS ± 0.05, 3 PL DECIMALS ± 0.025, ANGLES ± 0.5	MATERIAL DESCRIPTION: ...		SIZE: D / ROOT NUMBER: TSDR830USCU / REV: B / RELEASE STATE: In Work
	FINISH DESCRIPTION: ...		SCALE: 0.125 / PRODUCT LINE: LOAD CENTERS / SHEET: 1 of 2

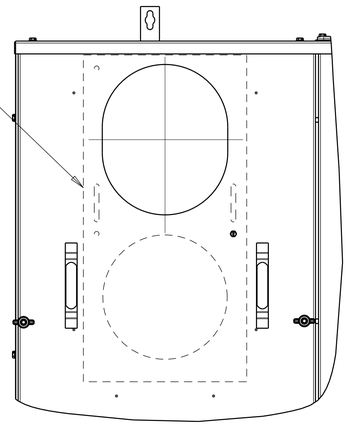
us_3rd_d.frm

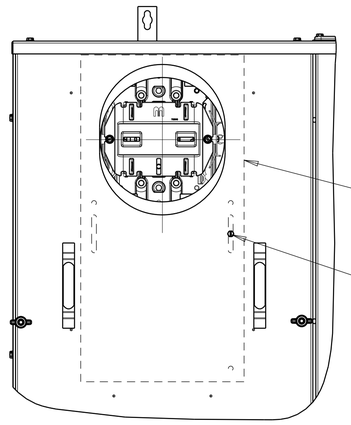




SCALE 0.300

BACK PLATE ADAPTER SHALL ROTATE TO HOLD THE METER.





THIS IS THE POSITION THE BACK PLATE ADAPTER SHALL BE IN WHEN INSTALLING.

THE HEIGHT IS ADJUSTED WITH THE BOLT AND SIDE SLOTS TO ENSURE THE PLATE IS CENTERED WITH INSTALLED METER AVOIDING ANY GAP AROUND THE METER.

LINE TERMINALS: ½" STUDS FOR U.L. LISTED ONE OR TWO HOLE NEMA MOUNTING TERMINALS.
COMPRESSION TERMINAL LIMITED TO 800 KCMIL SINGLE CONDUCTOR, HOMAC SERIES AL-NTN, AL-TN OR EQUIVALENT.
COMPRESSION TERMINALS LIMITED TO 400 KCMIL FOR STACKING LUGS, HOMAC SERIES ASL-NTN OR EQUIVALENT.
PRESSURE TERMINAL LIMITED TO 1000 KCMIL SINGLE CONDUCTOR, ILSCO TYPE TA OR EQUIVALENT.
PRESSURE TERMINALS LIMITED TO 350 KCMIL SINGLE CONDUCTOR, ILSCO TYPE AU OR EQUIVALENT.

LINE TERMINALS	
BOLT SIZE	TORQUE
3/8	300 INCH-LBS OR 25 FT-LBS
1/2	500 INCH-LBS OR 42 FT-LBS
INTERNAL HEX 5/16	275 INCH-LBS OR 23 FT-LBS

ABB PROPRIETARY AND CONFIDENTIAL INFORMATION
The information contained in this document has to be kept strictly confidential, and is not to be disclosed to any third party without the prior written consent of ABB. Any unauthorized use or disclosure of the information contained in this document is strictly forbidden.
ABB reserves all rights regarding intellectual Property Rights.
Copyright 2021 ABB. All rights reserved

Third Angle Projection

SIZE D	NUMBER TSDR830USCU	REV B
SCALE 0.125	PRODUCT LINE LOAD CENTERS	SHEET 2 of 2