CATALOG

NEMA full voltage power devices

Table of contents

01. Application information and technical data 004

02. Magnetic starters 010

03. Manual motor starters 152

04. Manual starters 160

05. Pumping panels 170

06. Magnetic contactors 194

01

Application information and technical data

300-line starters

Application information and technical data

									Maximum horsepower NEMA size		
Description	**00**	**0**	**1**	**2**	**3**	**4**	**5**	**6**	**7**	**8**	**9**
Normal starting duty HP rating[1]											
Single phase											
115 V 60 Hz	⅓	1	2	3	7½	–	–	–	–	–	–
230 V 60 Hz	1	2	3	7½	15	–	–	–	–	–	–
Three phase											
200 V 60 Hz	1½	5	7½	10	25	40	75	150	–	–	–
230 V 60 Hz	1½	5	7½	15	30	50	100	200	300	450	800
380–415 V 50 Hz	1½	3	10	25	50	75	150	300	500	750	1350
460 V 60 Hz	2	3	10	25	50	100	200	400	600	900	1600
575 V 60 Hz	2	5	10	25	50	100	200	400	600	900	1600
Plugging or jogging HP rating[1]											
Single phase											
115 V 60 Hz	–	½	1	2	5	–	–	–	–	–	–
230 V 60 Hz	–	1½	3	7½	10	–	–	–	–	–	–
Three phase											
200 V 60 Hz	–	1½	5	15	15	25	60	125	–	–	–
230 V 60 Hz	–	2	5	15	30	30	75	150	–	–	–
380–415 V 50h	–	2	5	15	30	50	125	250	–	–	–
460 V 60 Hz	–	1½	3	10	30	60	150	250	–	–	–
575 V 60 Hz	–	1	2	5	20	60	150	250	–	–	–
Continuous current max											
Starters and enclosed contactors	9	18	27	45	90	135	270	540	810	1215	2250
Open contactors	10	20	30	50	100	150	300	600	900	1350	2500
Coil burden (VA)											
Inrush 2-pole	151	151	151	528	1152	1248	2580	3360	1600	1500	2900
Holding 2-pole	24	24	24	60	83	87	191	255	210	140	300
Inrush 3-pole	151	151	151	528	1152	1248	2580	3360	1600	2900	3600
Holding 3-pole	24	24	24	60	83	87	191	255	210	300	400
Inrush 4- and 5-pole	151	151	151	576	1248	1356	3600	–	–	–	–
Holding 4- and 5-pole	24	24	24	75	87	95	276	–	–	–	–
Control power transformer VA (min)	50	50	50	100	200	250	500[2]	500[2]	1000[2]	1500[2]	1501[2]
Coil operating voltage											
% Minimum pickup	63	85	85	85	85	85	85	85	85	85	85
% Maximum dropout	15–30	63	63	68	65	65	65	65	50	50	50
Switching delay 3-pole											
Pickup typical (milliseconds)	7–15	15–30	15–30	20–40	20–45	20–45	30–50	30–50	60–90	80–125	80–125
Dropout typical (milliseconds)	20	7–15	7–15	7–15	7–15	7–15	15–25	15–25	100–150	25–100	25–100
Mechanical life (millions nominal)	2 ¾	20	20	10	5	5	5	1	1	1	0.5
Weight (less carton)											
Contactor (pounds)	3¾	2 ¾	2 ¾	6 ½	15	14 ¾	48	48	79	203	302
Starter (pounds)	14–8	3 ¾	3 ¾	7 ½	17 ¾	17 ½	53	75	106	263	365
Power terminals											
Wire size range (75°) AWG	20	14–8	14–8	14–4	10–1/0	8–3/0	1/0–500kcmil	2 2/0– 500kcmil	3 2–600kcmil	4 2–600kcmil	–
Torque (pounds–inches)	50	20	20	50	150	200	300	375	500	500	–
Max. noise (DBA)	85	50	50	50	50	50	65	65	65	65	65

[1]When operation of the controller requires jogging (inching) or plug stopping or when normal operation requires continued operation in excess of 5 operations per minute or 10 operations in a 10-minute period, the plugging or jogging horsepower ratings must be followed.
[2]In lieu of a 500 to 1500 VA control transformer, a 50 VA unit in conjunction with a control relay can be used as follows:
a. Wire control relay coil in control circuit on secondary side of control transformer.
b. Wire two poles of control relay in series with contactor coil at line voltage.

Mounting position

Devices must be mounted to a sturdy vertical surface with the line side terminals up. No other orientations are permitted.

Operating temperature

Equipment is designed for ambient temperature outside of equipment enclosures to be -25 ° to 40 °C. When contactor is energized, temperatures will be above outside ambient in equipment enclosures. Temperature rises inside the enclosures should be limited so that internal air temperature does not exceed 65 °C for sizes 00 to 6 and 60 °C for sizes 7 to 9. If condensing moisture is present, space heater kits should be used to prevent condensation when contactor is not energized.

Storage temperature should be -30 ° to 65 °C. If equipment is stored over 1 week, it may be necessary to cover the equipment and provide a source of heat to prevent condensation.

300-line starters

Application information and technical data

Short-circuit ratings

Fusible forms of combination magnetic starters equipped with UL labeled, nonrenewable, NEC-type fuses listed in the table below, are adequate for installation on motor branch circuits where the available short-circuit current at the incoming line terminals of the starter does not exceed the value shown.

Circuit breaker-type combination magnetic starters equipped with the circuit breakers listed in the table at right are adequate for installation on motor branch circuits where the available short-circuit current at the incoming line terminals of the starter does not exceed the value shown.

For either type, it is recognized that maintenance of some components may be required after a branch circuit fault and in some cases a device may require replacement.

Fusible combination starters

NEMA size	Fuse type	Maximum symmetrical RMS amperes
0–3	H, K	5,000
4, 5	H, K	10,000
0–5	J, RK-1, RK-5	100,000
6	J, L, RK-1, RK-5	100,000

Circuit breaker combination starters
Tmax XT molded case breakers and motor circuit protectors (MCP)

		Maximum symmetrical RMS amperes		
Breaker model	NEMA size	240 V	480 V	600 V
XT2	0–3	100,000	100,000	25,000
XT4	3–4	100,000	100,000	25,000

Circuit breaker combination starters

Breaker model	Rating amperes	NEMA size	Maximum symmetrical RMS amperes		
			240 V	480 V	600 V
TJJ and TJK	225–600	5	10,000	10,000	10,000
THJK	225–400	5	35,000	35,000	25,000
THJK	450–600	5	10,000	10,000	10,000
TKM, TKC	300–800	6	42,000	30,000	22,000
THKM8	300–800	6	65,000	35,000	25,000
TB6, TBC	300–800	6	65,000	65,000	42,000

300-line starters

Application information and technical data

Control transformers — where to use
It is often desirable to use a control transformer in conjunction with a magnetic starter or controller to provide low voltage control.

Description — factory wired
A transformer, with sufficient capacity for the control circuit, mounted with the starter can be supplied by the factory for the majority of transformer ratings and types of enclosures.

Coil suffix
(This table is to be used for starter forms without control transformers.)

Indicates voltage and frequency of operating coils. For use in ordering full voltage starters and contactors, sizes 00–6, with other coil ratings than those shown in listing in Section 2, magnetic starters.

Frequency (Hz)	24 V	115–120 V[5]	200–208 V[5]	230–240 V[5]	265–277 V	460–480 V[5]	575–600 V[5]
60	24	02	23	03	13	04	05
Frequency (Hz)	–	110 V	–	220 V	380–415 V	440 V	550 V
50	–	02	–	03	64	04	05

Note: The 02 coil suffix (115–120 V, 60 Hz/110 V, 50 Hz) supersedes the 22 coil suffix (120 V, 60 Hz).
[5]Suffix shown for this voltage is part of product number in magnetic starter-contactor listings.

Auxiliary contact ratings — NEMA size 0–9

	Amperes		
AC volts	**Continuous**	**Make**	**Break**
115	10	60	6.0
230	10	30	3.0
460	10	15	1.5
575	10	12	1.2
DC volts			
125	10	–	1.1
250	10	–	0.5

300-line starters

Application information and technical data

Contactor DC ratings

			Interrupting ratings							
			Inductive amps @125 V		Inductive amps @250 V		Noninductive amps @125 V		Noninductive amps @250 V	
NEMA size	No. of poles in series	Continuous current rating	N.O.	N.C.	N.O.	N.C.	N.O.	N.C.	N.O.	N.C.
00	1	9	2.5	2.5	0.6	0.5	5	4	1	0.8
00	2	9	7	7	1.2	1.2	25	25	5	4
00	3	9	14	14	3.5	3.5	35	35	15	15
00	4	9	25	25	7	7	50	50	50	50
0	1	18	2.8	2.5	0.7	0.5	6	4.5	1.1	0.9
0	2	18	7	7	1.5	1.2	35	25	6	4.5
0	3	18	14	14	3.5	3.5	50	35	25	25
0	4	18	25	25	7	7	90	60	60	55
1	1	27	3	2.5	0.7	0.5	6.5	4.5	1.2	0.9
1	2	27	7	7	1.5	1.2	50	25	7	4.5
1	3	27	14	14	3.5	3.5	70	35	35	25
1	4	27	25	25	7	7	120	60	70	55
2	2	45	7	–	1.5	–	60	–	9	–
2	3	45	14	–	3.5	–	120	–	40	–
2	4	45	25	–	7	–	160	–	80	–
3	2	90	7	–	2.2	–	600	–	300	–
3	3	90	14	–	4.5	–	600	–	600	–
3	4	90	25	–	9	–	600	–	600	–
4	2	135	7	–	2.2	–	600	–	300	–
4	3	135	14	–	4.5	–	600	–	600	–
4	4	135	25	–	9	–	600	–	600	–

02

Magnetic starters

Magnetic starters

Magnetic starters	
CR306, CR386 magnetic starters, nonreversing, noncombination	12
CR309 magnetic starters, reversing, noncombination	24
CR309 magnetic two-speed starters	29
CR307, CR407 magnetic starters, nonreversing, combination	33
CR387, CR487 mag-break magnetic starters, nonreversing, combination	53
CR310, CR410, CR311, CR411 magnetic starters, reversing, combination	70
CR390, CR490, mag-break magnetic starters, reversing, combination	79
CR412, CR413, CR492 magnetic two-speed, 1-winding starters	85
CR414, CR415, CR494 magnetic two-speed, 2-winding starters	98
Magnetic starters factory-installed modifications	113
Magnetic starters field-installed kits, modifications	121
Enclosures for 300-line magnetic starters	125
CR324 block overload relays	131
Electronic overload relays	135
Approximate motor full load current ratings	136
CR123C, CR123F motor starter heater selection	138
CR123K, CR123L panel mount overload relay heater selection	144
CR324X solid state overload relays	145

CR306, CR386 magnetic starters

Nonreversing

Typical size 1 motor starter

CR306 size 1 motor starter with solid-state overload relay installed

1600 horsepower maximum
NEMA sizes 00-9
600 volts maximum
50/60 Hz

Basic 300-line features

ABB's full voltage (600-volt maximum) magnetic motor starter has an encapsulated coil and a 3-leg overload relay to protect against overloads in all phases. It is on standard specifications of major manufacturers. The line offers features and benefits most asked for by users.
Forms available include reversing and nonreversing, two-speed, and combination, sizes 00–9.

- Toolless contactor disassembly (sizes 00–4) — allows quick access for inspection and maintenance. Just release two retainers and pull a clip to get at magnet, coil, and contacts.
- Saddle clamp terminals (sizes 00–1) — accommodate ring, spade, and stripped wire leads and carry permanent stamped-in identification. Staggered arrangement makes wiring easier and helps prevent shorting between phases.
- Current-carrying components — contact tips are weld-resistant silver cadmium oxide (fine silver on sizes 00 and 0 only). Contacts are installed in a wedge configuration for positive make with minimum bounce.
- Optional PF capacitor terminals — permit easy connection of power factor correction capacitors between contactor and overload relay for energy conservation.
- Class 20 overload protection.
- Visual trip indicator with manual reset — to avoid surprise restarts. Reset occurs on arm upstroke so a tripped condition can't be overridden by holding the arm down.
- Manual weld check — provides a convenient test against welding of overload relay contacts. Just depress the weld check operator to trip the relay, run a simple continuity test across the relay contacts, then depress the manual reset to return the starter to service.
- Optional isolated NO contact on the overload relay — provides means of direct interface with programmable controller or computer to monitor performance and diagnose faults.
- Dual bimetals — anticipate overloads, responding to rising current and temperature with faster tripping on severe overloads for better motor protection. Trip points are factory-calibrated for accuracy.
- ±10% trip adjustment — by turning a dial in the overload relay face allows "tuning" the protection to the motor on the spot.
- Largest selection of modifications and accessory kits — includes auxiliary contacts, coils, fifth-pole addition, vertical and horizontal mechanical interlocks, surge suppressors, control circuit fusing, NEMA Type enclosures, push buttons, selector switches, indicating lights, control transformers, space heaters, and more.

Technical features — solid-state overload

- 2:1 adjustable full load amps with tactile feedback dial
- Selectable 10/20/30 protection class
- Ambient insensitive within the stated operating temperature range of -20 ° to +70 °C
- Built-in thermal memory to prevent hot motor restarts
- Protection against complete phase current loss
- Manual reset (standard) and remote reset (optional) 120 V AC
- Accuracy: ± 2%
- Repeatability: ± 2%
- Self-powered @ 50% of minimum current range
- Size: 1–6 (0.40 A–540 A, 600 V, 50/60 Hz)
- Unbalance trip signal for PLC operation
- Manual trip
- Visual trip indication
- Standard isolated 1 NO and 1 NC aux. contact (A600, Q600)
- Built-in line/load straps
- Fits with existing 300-line starters
- Power factor correction terminals (sizes 1–4)
- DIN rail mountable sizes 1 and 2

CR306, CR386 magnetic starters

Nonreversing, non-combination

Typical CR306 size 4 magnetic motor starter

NEMA sizes 00–6 with thermal overload relay
600 volts maximum 50/60 Hz

Application
ABB's magnetic motor starters listed here may be used for starting full-voltage, nonreversing, single-speed AC motors up to 400 horsepower, 600 volts maximum, providing protection to the motor against running or stalled overloads.

Their compact size and ease of wiring make them especially suitable for motor control centers, custom-type control panels, and switchgear equipment. Refer to previous page for features of basic starter.

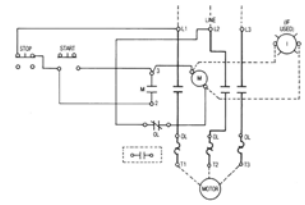

Typical schematic diagram for CR306 starter (NEMA sizes 00–6)

Reference publications

Instructions	
NEMA size	**Publication number**
00, 0, 1	1SQC912006M0201
2	1SQC912001M0201
3	1SQC912003M0201
4	1SQC912004M0201
5	1SQC912028M0201
6	1SQC912029M0201

CR306, CR386 magnetic starters

Nonreversing, non-combination, open, NEMA type 1, 3R, 12, 4/4X

NEMA sizes 00–6 with thermal overload relay
600 volts maximum 50/60 Hz

Standard features

Includes a holding interlock, pressure terminals for the line and load connections, plus a 3-leg block type ambient compensated overload relay with manual reset. All enclosures include external reset. NO/NC contacts on the overload relay are provided. To order, add suffix LAA to product numbers (size 00–5) listed in table. Three heaters should be ordered as separate items. See pages 139–145.

CR306, three-phase magnetic starters

				Open type	NEMA type 1	NEMA type 3R	NEMA type 12	NEMA type 4/4X
NEMA size	Continuous ampere rating[1]	Voltage	Horsepower	Product number CR306	Product number CR306	Product number CR306	Product number CR306	Product number CR306
00	9	Separate control—115–120 V		A002	A102	Use NEMA size 0	Use NEMA size 0	Use NEMA size 0
00	9	200–208	1½	A023	A123	Use NEMA size 0	Use NEMA size 0	Use NEMA size 0
00	9	230–240	1½	A003	A103	Use NEMA size 0	Use NEMA size 0	Use NEMA size 0
00	9	460–480	2	A004	A104	Use NEMA size 0	Use NEMA size 0	Use NEMA size 0
00	9	575–600	2	A005	A105	Use NEMA size 0	Use NEMA size 0	Use NEMA size 0
0	18	Separate control—115–120 V		B002	B102	B602	B202	B402
0	18	200–208	3	B023	B123	B623	B223	B423
0	18	230–240	3	B003	B103	B603	B203	B403
0	18	460–480	5	B004	B104	B604	B204	B404
0	18	575–600	5	B005	B105	B605	B205	B405
1	27	Separate control—115–120 V		C002	C102	C602	C202	C402
1	27	200–208	7½	C023	C123	C623	C223	C423
1	27	230–240	7½	C003	C103[2]	C603	C203	C403
1	27	460–480	10	C004	C104	C604	C204	C404
1	27	575–600	10	C005	C105	C605	C205	C405
2	45	Separate control—115–120 V		D002	D102	D602	D202	D402
2	45	200–208	10	D023	D123	D623	D223	D423
2	45	230–240	15	D003	D103	D603	D203	D403
2	45	460–480	25	D004	D104	D604	D204	D404
2	45	575–600	25	D005	D105	D605	D205	D405
3	90	Separate control—115–120 V		E002	E102	E602	E202	E402
3	90	200–208	25	E023	E123	E623	E223	E423
3	90	230–240	30	E003	E103	E603	E203	E403
3	90	460–480	50	E004	E104	E604	E204	E404
3	90	575–600	50	E005	E105	E605	E205	E405
4	135	Separate control—115–120 V		F002	F102	F602	F202	F402
4	135	200–208	40	F023	F123	F623	F223	F423
4	135	230–240	50	F003	F103	F603	F203	F403
4	135	460–480	100	F004	F104	F604	F204	F404
4	135	575–600	100	F005	F105	F605	F205	F405
5	270	Separate control—115–120 V		G002	G102	G602	G202	G402
5	270	200–208	75	G023	G123	G623	G223	G423
5	270	230–240	100	G003	G103	G603	G203	G403
5	270	460–480	200	G004	G104	G604	G204	G404
5	270	575–600	200	G005	G105	G605	G205	G405
6	540	Separate control—115–120 V		HH002	HH102	HH602	HH202	HH402
6	540	200–208	150	HH023	HH123	HH623	HH223	HH423
6	540	230–240	200	HH003	HH103	HH603	HH203	HH403
6	540	460–480	400	HH004	HH104	HH604	HH204	HH404
6	540	575–600	400	HH005	HH105	HH605	HH205	HH405

[1]Motor full load current should not exceed continuous ampere rating of the starter.

CR306 magnetic starters

Nonreversing, non-combination, open, NEMA type 1, 3R, 12, 4/4X

CR306 size 1 motor starter with solid-state overload relay installed

NEMA sizes 1–6 with solid state overload relay
600 volts maximum 50/60 Hz

Product number selection instructions

1. 50 Hz starters
   50 Hz forms (at standard voltages) are the same as shown in table for 60 Hz.
   See page 6 for 380–415 volt horsepower ratings.
2. Product notes
   Motor full-load current should not exceed continuous ampere rating of starter.
3. Note: Reversing, two speed, and combination starters are also available with solid-state overload relays. Contact your ABB Representative for more information.
4. Units are individually boxed and poly-packed six per carton as standard.
5. External reset not included on standard listed forms (NEMA Type 12).
6. For additional details on the solid state overload relay, see pages 146–150.

Technical features — solid-state overload

- 2:1 adjustable full load amps with tactile feedback dial
- Selectable 10/20/30 protection class
- Ambient insensitive within the stated operating temperature range of -20 ° to +70 °C
- Built-in thermal memory to prevent hot motor restarts
- Protection against complete phase current loss
- Manual reset (standard) and remote reset (optional) 120 V AC
- Accuracy: ± 2%
- Repeatability: ± 2%
- Self-powered at 50% of minimum current range
- Size: 1–6 (0.40–540 A, 600 V, 50/60 Hz)
- Unbalance trip signal for PLC operation
- Manual trip
- Visual trip indication
- Standard isolated 1 NO and 1 NC aux. contact (A600, Q600)
- Built-in line/load straps
- Fits with existing 300-line starters
- Power factor correction terminals (sizes 1–4)
- DIN rail mountable sizes 1 and 2

Reference publications

Instructions	
NEMA size	**Publication number**
00, 0, 1	1SQC912006M0201
2	1SQC912001M0201
3	1SQC912003M0201
4	1SQC912004M0201
5	1SQC912028M0201
6	1SQC912029M0201

CR306 magnetic starters

Nonreversing, non-combination, open, NEMA type 1, 3R, 12, 4/4X

NEMA sizes 1–6 with solid state overload relay
600 volts maximum 50/60 Hz

Includes a holding interlock, pressure terminals for the line and load connections, plus a solid-state overload relay (manual reset). Standard isolated 1NO and 1NC auxiliary contact (A600, Q600). Select current range from full load current selection table. Insert letter (C, D, E, F, etc.) from table in product number to replace *.

Refer to coil table, page 8 for other available starter coils and suffixes (sizes 1-6).

CR306, three-phase magnetic starters

NEMA size	Continuous ampere rating[1]	Voltage	Horsepower	Open type Product number CR306	NEMA type 1 Product number CR306	NEMA type 3R Product number CR306	NEMA type 12[2] Product number CR306	NEMA type 4/4X Product number CR306
1	27	Separate control — 115–120 V		CX*002	CX*102	CX*602	CX*202[1]	CX*402
1	27	200–208	7½	CX*023	CX*123	CX*623	CX*223[1]	CX*423
1	27	230–240	7½	CX*003	CX*103[2]	CX*603	CX*203[1]	CX*403
1	27	460–480	10	CX*004	CX*104	CX*604	CX*204[1]	CX*404
1	27	575–600	10	CX*005	CX*105	CX*605	CX*205[1]	CX*405
2	45	Separate control — 115–120 V		DX*002	DX*102	DX*602	DX*202[1]	DX*402
2	45	200–208	10	DX*023	DX*123	DX*623	DX*223[1]	DX*423
2	45	230–240	15	DX*003	DX*103	DX*603	DX*203[1]	DX*403
2	45	460–480	25	DX*004	DX*104	DX*604	DX*204[1]	DX*404
2	45	575–600	25	DX*005	DX*105	DX*605	DX*205[1]	DX*405
3	90	Separate control — 115–120 V		EX*002	EX*102	EX*602	EX*202[1]	EX*402
3	90	200–208	25	EX*023	EX*123	EX*623	EX*223[1]	EX*423
3	90	230–240	30	EX*003	EX*103	EX*603	EX*203[1]	EX*403
3	90	460–480	50	EX*004	EX*104	EX*604	EX*204[1]	EX*404
3	90	575–600	50	EX*005	EX*105	EX*605	EX*205[1]	EX*405
4	135	Separate control — 115–120 V		FX*002	FX*102	FX*602	FX*202[1]	FX*402
4	135	200–208	40	FX*023	FX*123	FX*623	FX*223[1]	FX*423
4	135	230–240	50	FX*003	FX*103	FX*603	FX*203[1]	FX*403
4	135	460–480	100	FX*004	FX*104	FX*604	FX*204[1]	FX*404
4	135	575–600	100	FX*005	FX*105	FX*605	FX*205[1]	FX*405
5	270	Separate control — 115–120 V		GX*002	GX*102	GX*602	GX*202[1]	GX*402
5	270	200–208	75	GX*023	GX*123	GX*623	GX*223[1]	GX*423
5	270	230–240	100	GX*003	GX*103	GX*603	GX*203[1]	GX*403
5	270	460–480	200	GX*004	GX*104	GX*604	GX*204[1]	GX*404
5	270	575–600	200	GX*005	GX*105	GX*605	GX*205[1]	GX*405
6	540	Separate control — 115–120 V		HX*002	HX*102	HX*602	HX*202[1]	HX*402
6	540	200–208	150	HX*023	HX*123	HX*623	HX*223[1]	HX*423
6	540	230–240	200	HX*003	HX*103	HX*603	HX*203[1]	HX*403
6	540	460–480	400	HX*004	HX*104	HX*604	HX*204[1]	HX*404
6	540	575–600	400	HX*005	HX*105	HX*605	HX*205[1]	HX*405

[1]Motor full load current should not exceed continuous ampere rating of the starter.
[2]External reset not included on standard listed forms.

CR306 magnetic starters

Nonreversing, non-combination, open, NEMA type 1, 3R, 12, 4/4X

Full load current selection table

For continuous rated motors, with a service factor of 1.15 to 1.25, select the heater with maximum motor amperes equal to or immediately greater than the motor full-load current (provides a maximum of 125% protection). For continuous rated motors with no service factor, multiply the full-load current of the motor by 0.90 and use this value to select the heater.

Overload range for solid state starters	NEMA size	Fuse max.	Breaker max.	Insert digit in product number
0.4–0.85	00–1	3	15	C
0.8–1.7	00–1	6	15	D
1.6–3.4	00–1	12	15	E
3.2–6.8	00–1	25	25	F
6.5–13.5	00–1	50	50	G
13–27	00–1	100	100	H
6.5–13.5	2	50	50	G
13–27	2	100	100	H
25–50	2	200	200	J
17–35	3 and 4	125	125	K
35–70	3 and 4	250	250	L
65–135	3 and 4	500	400	M
35–70	5	–	–	N
65–135	5	500	400	P
130–270	5	600	800	Q
130–270	6	1200	800	S
260–540	6	1200	800	T

CR306, CR386 magnetic starters

Nonreversing, non-combination, open, NEMA type 1, 3R, 12, 4/4X

NEMA sizes 00–6 with thermal overload relay
600 volts maximum 50/60 Hz

Standard features

Includes a holding interlock. One heater (per starter) for sizes 00–2 and two heaters (per starter) for size 3 should be ordered as separate items. See pages 139–145.

CR306, single-phase magnetic starters

				Open type	NEMA type 1	NEMA type 3R	NEMA type 12	NEMA type 4/4X
NEMA size	Continuous ampere rating[1]	Voltage	Horsepower	Product number CR306	Product number CR306	Product number CR306	Product number CR306	Product number CR306
00	9	115-120	1/3	H002	H102	Use NEMA size 0	Use NEMA size 0	Use NEMA size 0
00	9	230-240	1	H003	H103	Use NEMA size 0	Use NEMA size 0	Use NEMA size 0
0	18	115-120	1	J002	J102	J602	J202	J402
0	18	230-240	2	J003	J103	J603	J203	J403
1	27	115-120	2	K002	K102	K602	K202	K402
1	27	230-240	3	K003	K103	K603	K203	K403
1P	36	115-120	3	K002BMA	K102BKA	K602BKA	K202BKA	K402BKA
1P	36	230-240	5	K003BMA	K103BKA	K603BKA	K203BKA	K403BKA
2	45	115-120	3	L002	L102	L602	L202	L402
2	45	230-240	7½	L003	L103	L603	L203	L403
3	90	115-120	7½	M002	M102	M602	M202	M402
3	90	230-240	15	M003	M103	M603	M203	M403
3	90	460-480	25	M004	M104	M604	M204	M404
3	90	575-600	25	M005	M105	M605	M205	M405

[1]Motor full load current should not exceed continuous ampere rating of the starter.

CR306, CR386 magnetic starters

Nonreversing, non-combination

200 horsepower maximum
NEMA sizes 00–6
600 volts maximum

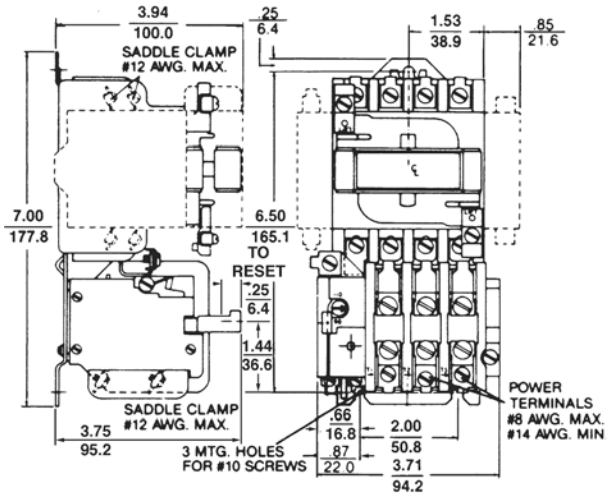

Open type, NEMA sizes 00-1 (3 3/4 lbs.)

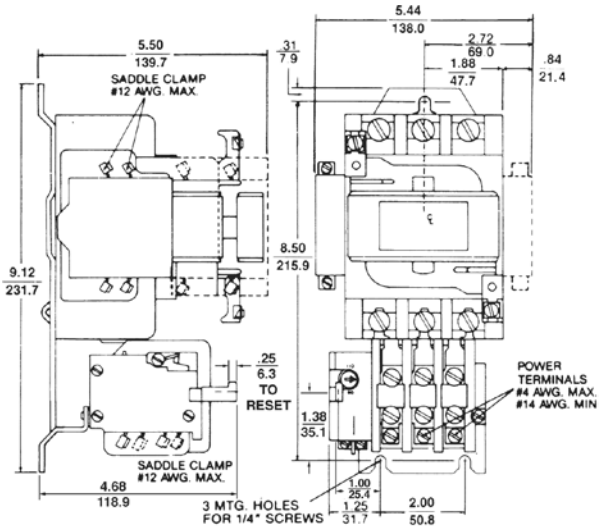

Open type, NEMA size 2 (8 lbs.)

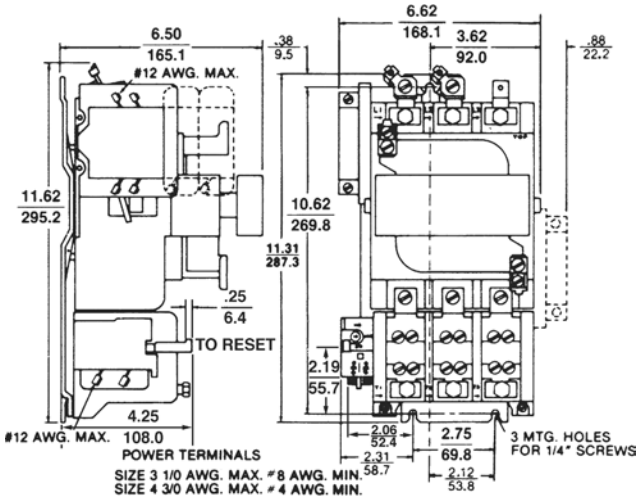

Open type, NEMA sizes 3 (19 lbs.) and 4 (20 lbs.)

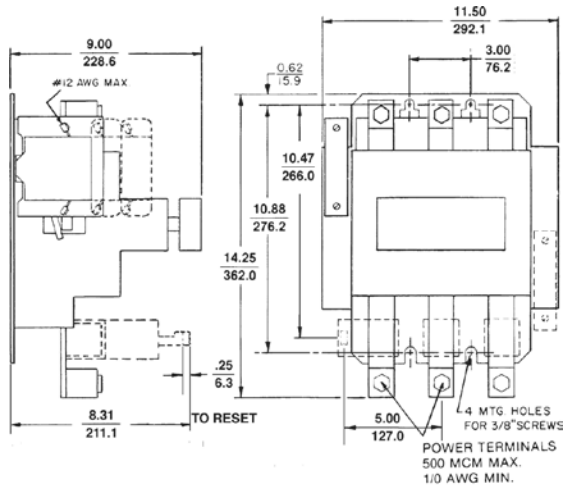

Open type, NEMA size 5 (55 lbs.)

Outlines, dimensions (in. / mm) and weights (for estimating only)

CR306, CR386 magnetic starters

Nonreversing, non-combination

200 horsepower maximum
NEMA sizes 00–6
600 volts maximum

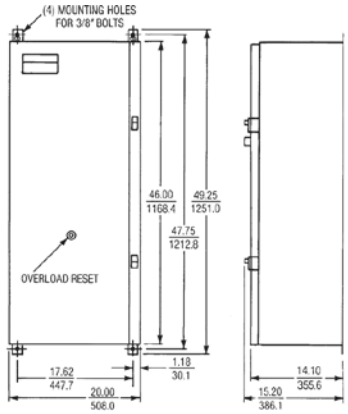

—
CR306 NEMA type 1 and 12, size 6

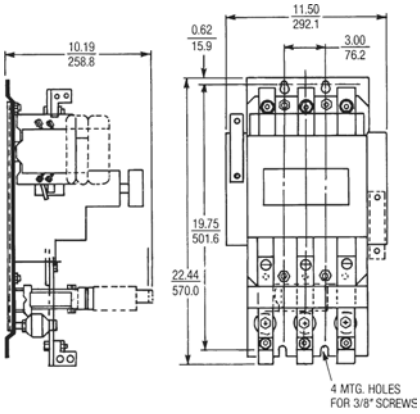

—
CR306 open type, NEMA size 6

Outlines, dimensions (in. / mm) and weights (for estimating only)

CR306, CR386 magnetic starters

Nonreversing, non-combination

200 horsepower maximum
NEMA sizes 00–5
600 volts maximum

CR306 NEMA type 1 NEMA sizes 00–4

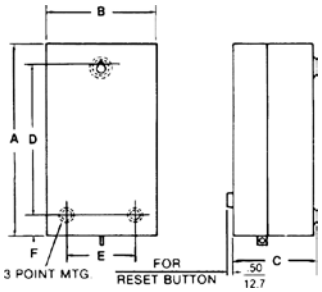

NEMA type 1, sizes 00-4

NEMA size	Dimension A	Dimension B	Dimension C	Dimension D	Dimension E	Dimension F	Mounting screw size	Shipping weight (lbs)
00, 0, 1	10.00 (254.0)	6.00 (152.4)	4.63 (117.6)	8.00 (203.2)	4.00 (101.6)	1.00 (25.4)	#10	5 1/2
2	13.25 (336.6)	7.38 (187.4)	6.13 (155.6)	11.00 (279.4)	5.00 (127.0)	1.13 (28.7)	¼"	13
3	20.25 (514.4)	8.75 (222.2)	7.31 (185.7)	17.00 (431.8)	5.75 (146.0)	1.88 (47.6)	¼"	35
4	25.00 (635.0)	8.75 (222.2)	7.31 (185.7)	22.00 (558.8)	5.75 (146.0)	1.50 (38.1)	¼"	38

CR306 NEMA type 1 NEMA size 5

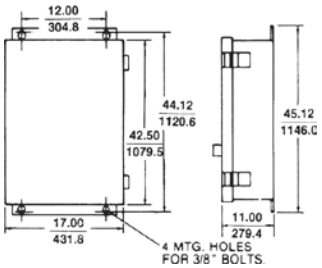

NEMA type 1, size 5 (134 lbs.)

See diagram for dimensions

CR306 NEMA type 12 NEMA sizes 0–2

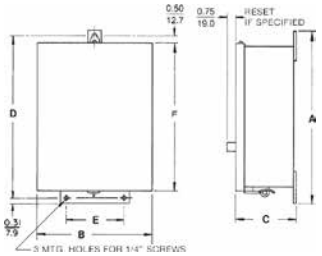

NEMA type 12, sizes 0-2

NEMA size	Dimension A	Dimension B	Dimension C	Dimension D	Dimension E	Dimension F	Shipping weight (lbs)
0, 1	11.63 (295.4)	6.25 (158.8)	4.75 (120.6)	11.00 (279.4)	3.00 (76.2)	10.25 (260.4)	9 1/2
2	14.63 (371.6)	7.63 (193.8)	6.25 (158.8)	14.00 (355.6)	4.38 (111.2)	13.25 (366.6)	15

Outlines, dimensions (in. / mm) and weights (for estimating only)

CR306, CR386 magnetic starters

Nonreversing, non-combination

200 horsepower maximum
NEMA sizes 00–5
600 volts maximum

CR306 NEMA type 12 NEMA sizes 3–5

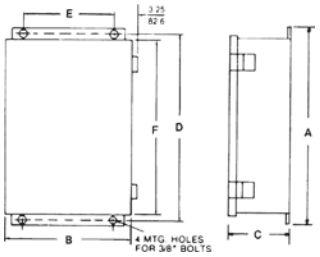

NEMA type 12, sizes 3-5

NEMA size	Dimension A	Dimension B	Dimension C	Dimension D	Dimension E	Dimension F	Shipping weight (lbs)
3	24.00 (609.6)	10.50 (266.7)	7.25 (184.2)	23.00 (584.2)	5.75 (146.1)	21.25 (539.8)	43
4	30.00 (762.0)	10.50 (266.7)	7.25 (184.2)	29.00 (736.6)	5.75 (146.1)	27.25 (692.2)	48
5	45.50 (1155.7)	17.00 (431.8)	10.25 (260.4)	44.50 (1130.3)	12.00 (304.8)	42.75 (1085.9)	154

CR306 NEMA type 3R NEMA sizes 00–2

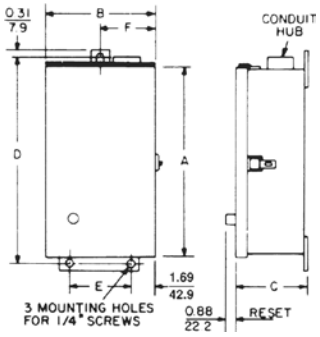

NEMA type 3R, sizes 00-2

NEMA size	Dimension A	Dimension B	Dimension C	Dimension D	Dimension E	Dimension F	Shipping weight (lbs)
0, 1	14.50 (368.3)	6.38 (162.1)	4.75 (120.6)	15.00 (381.0)	3.00 (76.2)	3.19 (81.0)	9½
2	16.50 (419.1)	7.75 (196.8)	6.50 (165.1)	17.00 (431.8)	4.38 (111.2)	3.88 (98.6)	15

CR306, CR386 magnetic starters

Nonreversing, non-combination

200 horsepower maximum
NEMA sizes 00–5
600 volts maximum

CR306 NEMA type 3R NEMA sizes 3–5

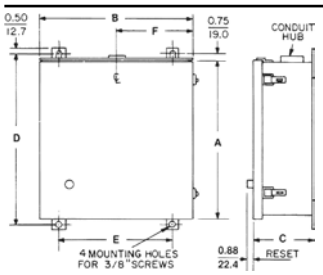

NEMA type 3R, sizes 3-5

NEMA size	Dimension A	Dimension B	Dimension C	Dimension D	Dimension E	Dimension F	Shipping weight (lbs)
3	22.00 (558.8)	17.19 (436.6)	7.25 (184.2)	23.50 (596.9)	11.00 (279.4)	8.6 (217.9)	43
4	26.00 (660.4)	17.19 (436.6)	7.25 (184.2)	27.50 (698.5)	11.00 (279.4)	8.6 (217.9)	48
5	42.00 (1066.8)	22.00 (558.8)	10.25 (260.4)	43.50 (1104.9)	16.00 (406.0)	11.0 (279.4)	157

CR306 NEMA type 4/4X NEMA sizes 0–5

NEMA size	Dimension A	Dimension B	Dimension C	Shipping weight (lbs)
0, 1	15.62 (396.7)	6.38 (162.0)	4.75 (120.6)	16
2	17.62 (447.5)	7.75 (196.8)	6.50 (165.1)	20
3	24.50 (622.3)	17.00 (431.8)	7.25 (184.2)	125
4	28.50 (723.9)	17.00 (431.8)	7.25 (184.2)	132
5	44.50 (1130.3)	22.00 (558.8)	10.25 (260.4)	135

CR309 magnetic reversing starters

Non-combination

200 horsepower maximum
NEMA sizes 00-5
600 volts maximum only)

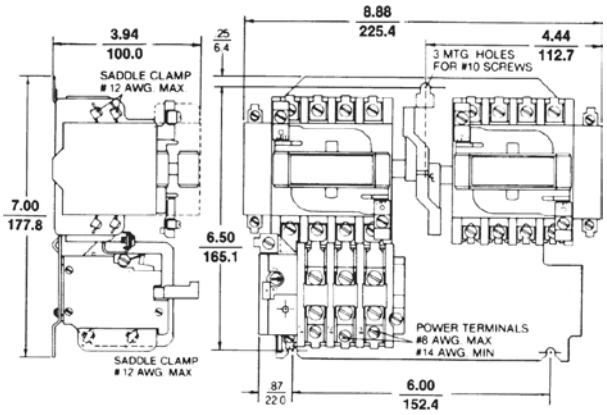

Open type, NEMA size 00, 0 and 1 reversing (horizontal); 7¾ lbs.

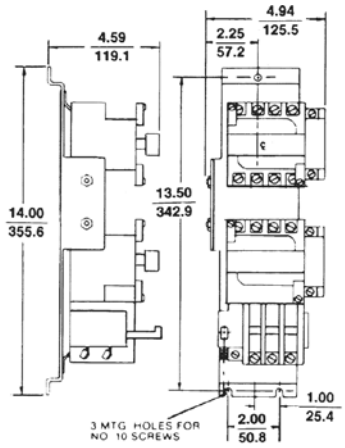

Open type, NEMA size 0 and 1 reversing (vertical); 7¼ lbs.

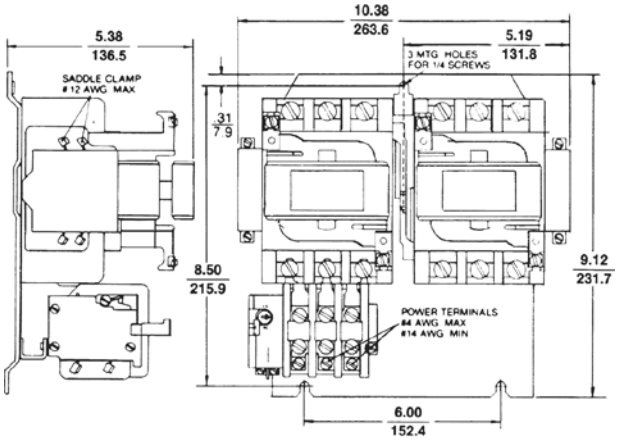

Open type, NEMA size 2 reversing (horizontal), 16¼ lbs.

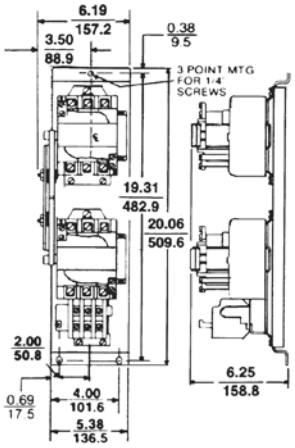

Open type, NEMA size 2 reversing (vertical); 16¼ lbs.

CR309 magnetic reversing starters

Non-combination

200 horsepower maximum
NEMA sizes 00-5
600 volts maximum only)

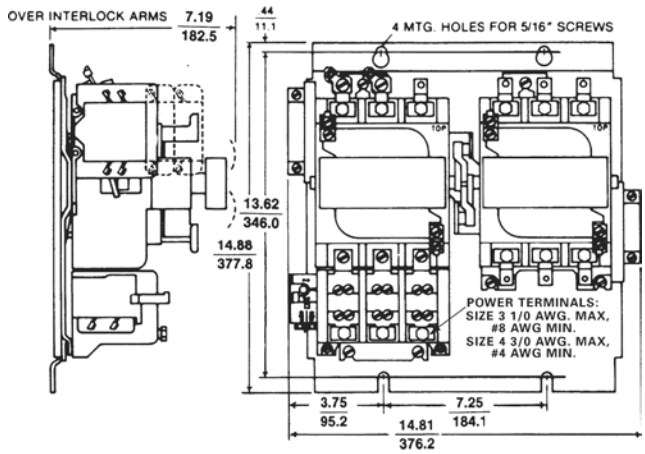

Open type, NEMA size 3 and 4 reversing (horizontal); 49 lbs.

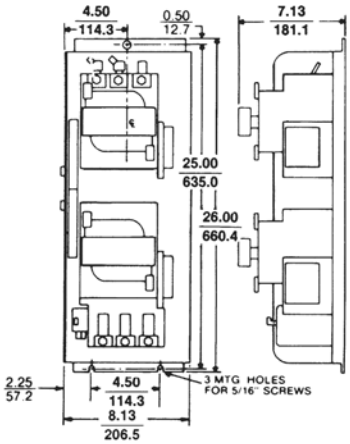

Open type, NEMA size 3 and 4 reversing (vertical); 49 lbs.

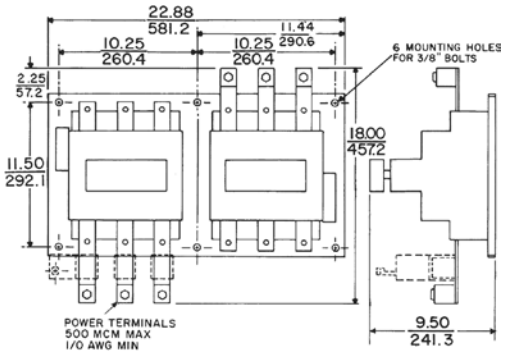

Open type, NEMA size 5 reversing (horizontal); 115 lbs.

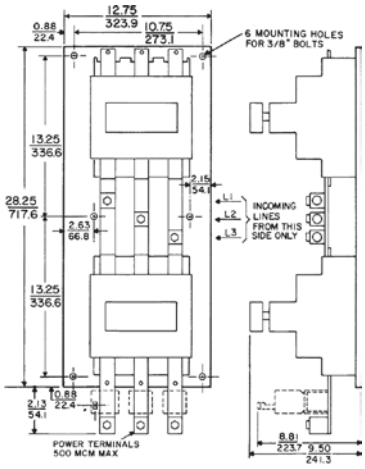

Open type, NEMA size 5 reversing (vertical), 115 lbs.

Outlines, dimensions (in. / mm) and weights (for estimating only)

CR309 magnetic reversing starters

Non-combination

200 horsepower maximum
NEMA sizes 00-5
600 volts maximum only)

CR309 NEMA type 1 NEMA sizes 00–2 reversing

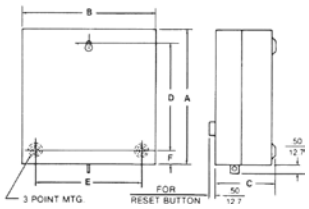

NEMA type 1, Sizes 00-2 reversing

NEMA size	Dimension A	Dimension B	Dimension C	Dimension D	Dimension E	Dimension F	Mounting screw size	Shipping weight (lbs)
00, 0, 1	10.00 (254.0)	10.00 (254.0)	4.62 (117.4)	8.00 (203.2)	8.00 (203.2)	1.00 (25.4)	# 10	12 1/2
2	13.25 (336.6)	12.00 (304.8)	6.12 (155.4)	11.00 (279.4)	9.00 (228.6)	1.12 (28.6)	1/4”	27 1/2

CR309 NEMA type 1 NEMA sizes 3–5 reversing

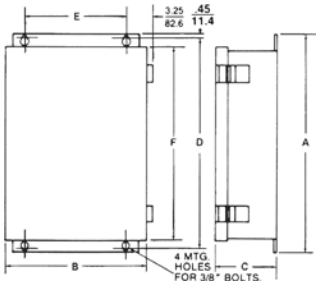

NEMA type 1, Sizes 3-5 reversing

NEMA size	Dimension A	Dimension B	Dimension C	Dimension D	Dimension E	Dimension F	Shipping weight (lbs)
3	24.00 (609.6)	18.00 (457.2)	8.62 (219.1)	23.00 (584.2)	13.00 (330.2)	21.62 (549.1)	80
4	30.00 (762.00)	18.00 (457.2)	8.62 (219.1)	29.00 (736.6)	13.00 (330.2)	27.62 (701.6)	100
5	51.13 (1298.7)	32.00 (812.8)	11.50 (292.1)	51.12 (1298.4)	27.00 (685.8)	50.12 (1273.0)	286

CR309 NEMA type 12 NEMA sizes 0-2 reversing

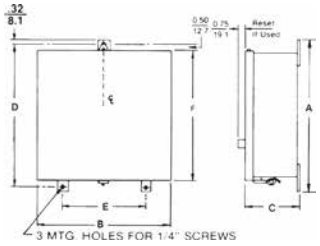

NEMA type 12, Sizes 0-2 reversing

NEMA size	Dimension A	Dimension B	Dimension C	Dimension D	Dimension E	Dimension F	Shipping weight (lbs)
0, 1	11.87 (301.5)	10.25 (260.4)	4.75 (120.6)	11.00 (279.4)	7.00 (177.8)	10.25 (260.4)	13
2	14.64 (371.8)	12.25 (311.2)	6.25 (158.8)	14.00 (355.6)	9.00 (228.6)	13.25 (336.6)	29

Outlines, dimensions (in. / mm) and weights (for estimating only)

CR309 magnetic reversing starters

Non-combination

200 horsepower maximum
NEMA sizes 00-5
600 volts maximum only)

CR309 NEMA type 12 NEMA sizes 3–5 reversing

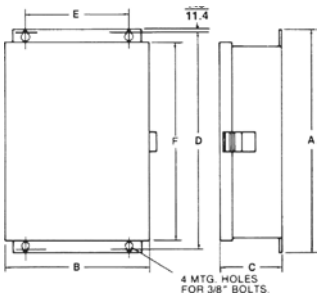

NEMA type 12, Sizes 3-5 reversing

NEMA size	Dimension A	Dimension B	Dimension C	Dimension D	Dimension E	Dimension F	Shipping weight (lbs)
3	24.00 (609.6)	18.00 (457.2)	7.88 (200.0)	23.00 (584.2)	13.00 (330.2)	21.38 (543.0)	85
4	30.00 (762.0)	18.00 (457.2)	7.88 (200.0)	29.00 (736.6)	13.00 (330.2)	26.38 (670.0)	100
5	51.50 (1308.1)	32.00 (812.8)	10.25 (260.4)	50.50 (1282.7)	27.00 (685.8)	48.75 (1238.3)	286

CR309 NEMA type 3R NEMA sizes 0–2 reversing

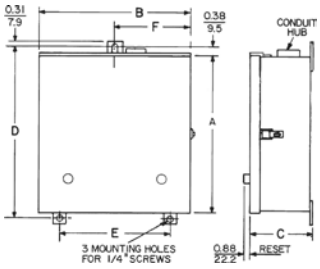

NEMA type 3R, sizes 0-2 reversing

NEMA size	Dimension A	Dimension B	Dimension C	Dimension D	Dimension E	Dimension F	Shipping weight (lbs)
0, 1	14.50 (368.3)	10.38 (263.5)	4.75 (120.6)	15.00 (381.0)	11.00 (279.4)	5.19 (131.7)	30
2	16.50 (419.1)	12.50 (317.5)	6.50 (165.1)	17.00 (431.8)	12.00 (304.8)	6.25 (158.8)	50

CR309 magnetic reversing starters

Non-combination

200 horsepower maximum
NEMA sizes 00-5
600 volts maximum only)

CR309 NEMA type 3R NEMA sizes 3–5 reversing

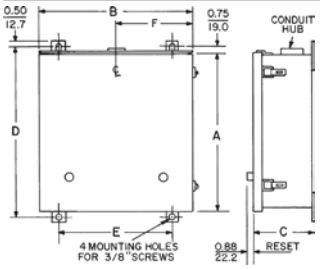

NEMA type 3R, sizes 3-5 reversing

NEMA size	Dimension A	Dimension B	Dimension C	Dimension D	Dimension E	Dimension F	Shipping weight (lbs)
3	26.00 (660.4)	21.00 (533.4)	8.00 (203.2)	27.50 (698.5)	15.00 (381.0)	10.50 (266.7)	90
4	30.00 (762.0)	21.00 (533.4)	8.00 (203.2)	31.50 (800.1)	15.00 (381.0)	10.50 (266.7)	105
5	48.00 (1219.2)	32.00 (812.8)	10.25 (260.4)	49.50 (1257.3)	26.00 (660.4)	16.00 (406.4)	286

CR309 NEMA type 4/4X NEMA sizes 0–5 reversing

NEMA size	Height	Width	Depth	Shipping weight (lbs)
0, 1	15.63 (397.0)	10.38 (263.7)	5.50 (139.7)	30
2	17.63 (447.8)	12.50 (317.5)	7.50 (190.5)	50
3	29.00 (736.6)	21.00 (533.4)	8.88 (225.6)	90
4	33.00 (838.2)	21.00 (533.4)	8.88 (225.6)	105
5	47.55 (1207.8)	36.00 (914.4)	11.12 (282.4)	260

CR309 magnetic starters

Two-speed

Non-combination
200 horsepower maximum
NEMA sizes 0-5
600 volts maximum

CR309 open NEMA sizes 0–2 two-speed

NEMA size	Dimension A	Dimension B	Dimension C	Dimension D	Dimension E	Dimension F	Mounting screw size	Shipping weight (lbs)
0, 1	Two-speed, two-winding	7.00 (177.8)	8.88 (225.6)	3.94 (100.0)	6.50 (165.1)	4.44 (112.8)	#10	8
0, 1	Two-speed, one-winding	7.00 (177.8)	9.88 (251.0)	3.94 (100.0)	6.50 (165.1)	4.44 (112.8)	#10	8¾
2	Two-speed, two-winding	9.12 (231.6)	10.36 (263.2)	5.38 (136.6)	8.50 (215.8)	5.19 (131.7)	¼"	18¼
2	Two-speed, one-winding	9.12 (231.6)	13.38 (339.6)	5.38 (136.6)	8.50 (215.8)	5.19 (131.7)	¼"	19

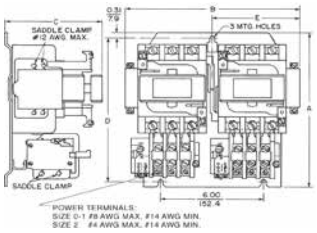

Open type, NEMA sizes 0-2 two-speed

CR309 open NEMA sizes 3 and 4 two-speed

NEMA size	Operation type	Dimension A	Dimension B	Shipping weight (lbs)
3, 4	Two-speed, two winding	14.81 (376.2)	3.75 (95.2)	50
3, 4	Two-speed, one-winding	18.81 (477.8)	5.81 (147.6)	52

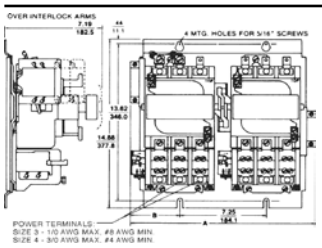

Open type, NEMA sizes 3 and 4 two-speed

CR309 open NEMA sizes 5 two-speed

NEMA size	Operation type	Dimension A	Dimension B	Shipping weight (lbs)
5	Two-speed, two-winding	22.88 (581.2)	10.25 (260.4)	–
5	Two-speed, one-winding	28.75 (730.3)	16.00 (406.4)	–

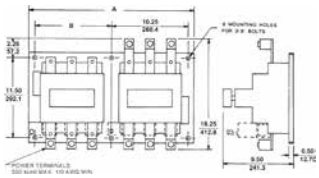

Open type, NEMA size 5 two-speed

[1]Contact nearest ABB Representative for weight.

Outlines, dimensions (in. / mm) and weights (for estimating only)

CR309 magnetic starters
Two-speed

Non-combination
200 horsepower maximum
NEMA sizes 0-5
600 volts maximum

CR309 NEMA type 1 NEMA sizes 0–2 two-speed

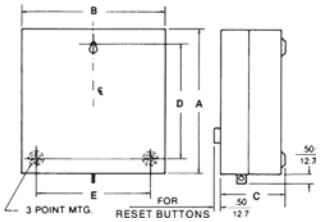

NEMA type 1, sizes 0–2 two-speed

NEMA size	Dimension A	Dimension B	Dimension C	Dimension D	Dimension E	Dimension F	Mounting screw size	Shipping weight (lbs)
0, 1	Two-speed, two-winding	10.00 (254.0)	10.00 (254.0)	4.62 (117.3)	8.00 (203.2)	8.00 (203.2)	#10	13
0, 1	Two-speed, one-winding	10.00 (254.0)	13.50 (342.9)	4.62 (117.3)	8.00 (203.2)	11.50 (292.1)	#10	14
2	Two-speed, two-winding	13.25 (336.6)	12.00 (304.8)	6.12 (155.4)	11.00 (279.4)	9.00 (228.6)	¼"	28
2	Two-speed, one-winding	13.25 (336.6)	16.00 (406.4)	6.12 (155.4)	11.00 (279.4)	13.00 (330.2)	¼"	30

CR309 NEMA type 1 NEMA sizes 3–5 two-speed

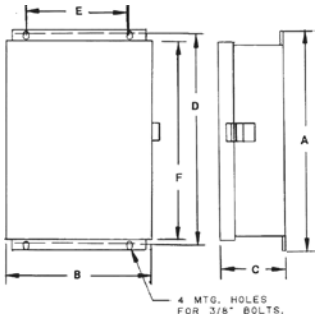

NEMA type 1, sizes 3–5 two-speed

NEMA size	Dimension A	Dimension B	Dimension C	Dimension D	Dimension E	Dimension F	Mounting screw size	Shipping weight (lbs)
3	Two-speed, two-winding	24.00 (609.6)	18.00 (457.2)	8.62 (219.0)	23.00 (584.2)	13.00 (330.2)	21.62 (549.1)	90
3	Two-speed, one-winding	28.00 (711.2)	22.00 (558.8)	8.62 (219.0)	27.00 (685.8)	17.00 (431.8)	25.62 (650.8)	105
4	Two-speed, two-winding	30.00 (762.0)	18.00 (457.2)	8.62 (219.0)	29.00 (736.6)	13.00 (330.2)	27.62 (701.6)	125
4	Two-speed, one-winding	34.00 (863.6)	22.00 (558.8)	8.62 (219.0)	33.00 (838.2)	17.00 (431.8)	31.62 (803.2)	130
5	Two-speed, two-winding	51.13 (1298.7)	32.00 (812.8)	11.50 (292.1)	50.13 (1273.3)	27.00 (685.8)	50.12 (1273.0)	–
5	Two-speed, one-winding	51.13 (1298.7)	32.00 (812.8)	11.50 (292.1)	50.13 (1273.3)	27.00 (685.8)	50.12 (1273.0)	–

CR309 NEMA type 12 NEMA sizes 0–2 two-speed

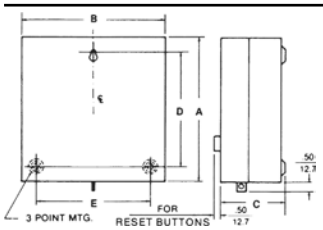

NEMA type 12, sizes 0– 2 two-speed

NEMA size	Dimension A	Dimension B	Dimension C	Dimension D	Dimension E	Dimension F	Mounting screw size	Shipping weight (lbs)
0, 1	Two-speed, two-winding	11.62 (295.1)	10.25 (260.4)	4.75 (120.6)	11.00 (279.4)	7.00 (177.8)	10.25 (260.4)	14
0, 1	Two-speed, one-winding	15.62 (396.7)	14.25 (362.0)	4.75 (120.6)	15.00 (381.0)	11.00 (279.4)	14.25 (362.0)	14
2	Two-speed, two-winding	14.62 (371.3)	12.25 (311.2)	6.25 (158.8)	14.00 (355.6)	9.00 (228.6)	13.25 (336.6)	30
2	Two-speed, one-winding	17.62 (447.5)	16.25 (412.8)	6.25 (158.8)	17.00 (431.8)	12.00 (304.8)	16.25 (412.8)	30

Outlines, dimensions (in. / mm) and weights (for estimating only)

CR309 magnetic starters

Two-speed

200 horsepower maximum
NEMA sizes 0-5
600 volts maximum

CR309 NEMA type 12 NEMA sizes 3–5 two-speed

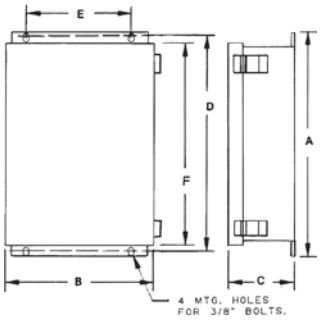

NEMA type 12, size 3 - 5 two-speed

NEMA size	Dimension A	Dimension B	Dimension C	Dimension D	Dimension E	Dimension F	Dimension F	Shipping weight (lbs)
3	Two-speed, two-winding	24.00 (609.6)	18.00 (457.2)	7.88 (200.0)	23.00 (584.2)	13.00 (330.2)	21.38 (543.0)	90
3	Two-speed, one-winding	28.00 (711.2)	22.00 (558.8)	7.88 (200.0)	27.00 (685.8)	17.00 (431.8)	25.38 (644.7)	105
4	Two-speed, two-winding	30.00 (762.0)	18.00 (457.2)	7.88 (200.0)	29.00 (736.6)	17.00 (431.8)	31.38 (797.1)	125
4	Two-speed, one-winding	34.00 (863.6)	22.00 (558.8)	7.88 (200.0)	33.00 (838.2)	17.00 (431.8)	31.38 (797.1)	130
5	Two-speed, two-winding	51.50 (1308.1)	32.00 (812.8)	10.25 (260.4)	50.50 (1282.7)	27.00 (685.8)	48.75 (1238.3)	–
5	Two-speed, one-winding	51.50 (1308.1)	32.00 (812.8)	10.25 (260.4)	50.50 (1282.7)	27.00 (685.8)	48.75 (1238.3)	–

CR309 NEMA type 3R NEMA sizes 0–2 two-speed

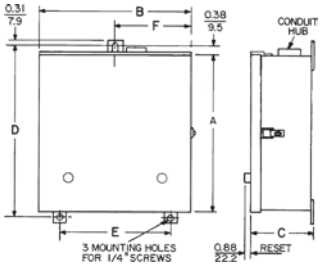

NEMA type 3R, sizes 0 - 2 two-speed

NEMA size	Operation type	Dimension A	Dimension B	Dimension C	Dimension D	Dimension E	Dimension F	Shipping weight (lbs)
0, 1	Two-Speed, Two-Winding	14.50 (368.3)	10.88 (263.5)	4.75 (120.6)	15.00 (381.0)	7.00 (177.8)	5.19 (131.7)	31
0, 1	Two-Speed, One-Winding	14.50 (368.3)	14.38 (365.1)	4.75 (120.6)	15.00 (381.0)	11.00 (279.4)	7.19 (182.5)	33
2	Two-Speed, Two-Winding	16.50 (419.1)	12.50 (317.5)	6.50 (165.1)	17.00 (431.8)	8.00 (203.2)	6.25 (158.7)	51
2	Two-Speed, One-Winding	16.50 (419.1)	16.50 (419.1)	6.50 (165.1)	17.00 (431.8)	12.00 (304.8)	8.25 (209.5)	56

CR309 magnetic starters

Two-speed

200 horsepower maximum
NEMA sizes 0-5
600 volts maximum

CR309 NEMA type 3R NEMA sizes 3–5 two-speed

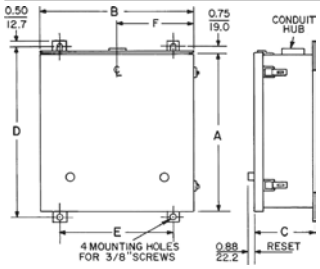

NEMA type 3R, sizes 3– 5 two-speed

NEMA size	Dimension A	Dimension B	Dimension C	Dimension D	Dimension E	Dimension F	Shipping weight (lbs)
3	26.00 (660.4)	21.00 (533.4)	8.00 (203.2)	27.50 (698.5)	15.00 (381.0)	10.50 (266.7)	90
4	30.00 (762.0)	21.00 (533.4)	8.00 (203.2)	31.50 (800.1)	15.00 (381.0)	10.50 (266.7)	105
5	48.00 (1219.2)	32.00 (812.8)	10.25 (260.4)	49.50 (1257.3)	26.00 (660.4)	16.00 (406.4)	286

CR309 NEMA type 4/4X NEMA sizes 0–5 two-speed

NEMA size	Product number	Height	Width	Depth	Shipping weight (lbs)	
3–3 and 5–3 pole forms					**3–3 pole**	**5–3 pole**
0, 1	CR309 (B4 and C4)	15.62 (396.7)	10.38 (263.7)	5.50 (139.7)	31	–
0, 1	CR309 (R4 and S4)	15.62 (396.7)	14.38 (365.2)	5.50 (139.7)	–	33
2	CR309 D4	17.62 (447.5)	12.50 (317.3)	6.25 (158.6)	51	–
2	CR309 T4	17.62 (447.5)	16.50 (419.1)	6.5 (165.1)	–	56
3	CR309 E4, CR309 U4	29.00 (736.6)	21.00 (533.4)	8.0 (203.2)	85	100
4	CR309 F4, CR309 W4	33.00 (838.2)	21.00 (533.4)	8.0 (203.2)	120	130
5	CR309 G4, CR309 Z4	47.55 (1207.8)	36.00 (914.4)	11.12 (282.4)	230	250

CR307, CR407, CR308, CR408 magnetic starters

Nonreversing, combination, NEMA type 1, 3R, 12, 4/4X

—
Typical combination starter in general purpose type 1 enclosure

400 horsepower maximum
NEMA sizes 0–6
600 volts maximum
50/60 Hz

Application

These combination starters are used for full voltage starting of single-speed squirrel-cage induction motors up to 400 horsepower maximum, 600 volts maximum. Each starter provides short-circuit protection by means of a fusible disconnect, a thermal magnetic trip circuit breaker, or circuit interrupter function with a nonfusible disconnect switch.

Features

- Branch circuit protection — is provided by means of a disconnect switch or molded case circuit breaker.
- Mechanism—always controls interrupting switch.
- Easy inspection, maintenance—performed from starter front.
- LED lights standard.
- Optional factory-installed control transformer.
- Refer to page 12 for features of basic starter.

—
Reference publications

Instructions	
NEMA size	**Publication number**
0, 1	1SQC912007M0201
2	1SQC912002M0201
3	1SQC912010M0201
4	1SQC912011M0201
5	1SQC912121M0201
6	1SQC912122M0201

CR308, CR408 magnetic starters

Nonreversing, combination, NEMA type 1, 3R, 12, 4/4X

NEMA sizes 0–6, nonfusible disconnect type
600 volts maximum 50/60 Hz

Standard features

Includes a holding interlock, pressure terminals for the line and load connections, plus a 3-leg block type ambient compensated overload relay with manual reset. All enclosures include external reset. NO/NC contacts on the overload relay are provided. LED lights standard.

CR308/408 nonfusible disconnect

				NEMA type 1	NEMA type 3R	NEMA type 12	NEMA type 4/4X
Voltage (60 Hz)	NEMA size	Maximum horsepower	Continuous amp rating	Product number CR	Product number CR	Product number CR	Product number CR
200–208	0	3	18	308BT081A4AAAAA	408B6081A4AAAAA	408B2081A4AAAAA	408B4081A4AAAAA
200–208	1	7½	27	308CT081A4AAAAA	408C6081A4AAAAA	408C2081A4AAAAA	408C4081A4AAAAA
200–208	2	10	45	308DT081A4AAAAA	408D6081A4AAAAA	408D2081A4AAAAA	408D4081A4AAAAA
200–208	3	25	90	408E1081A4AAAAA	408E6081A4AAAAA	408E2081A4AAAAA	408E4081A4AAAAA
200–208	4	40	135	408F1081A4AAAAA	408F6081A4AAAAA	408F2081A4AAAAA	408F4081A4AAAAA
230–240	0	3	18	308BT031A4AAAAA	408B6031A4AAAAA	408B2031A4AAAAA	408B4031A4AAAAA
230–240	1	7½	27	308CT031A4AAAAA	408C6031A4AAAAA	408C2031A4AAAAA	408C4031A4AAAAA
230–240	2	15	45	308DT031A4AAAAA	408D6031A4AAAAA	408D2031A4AAAAA	408D4031A4AAAAA
230–240	3	30	90	408E1031A4AAAAA	408E6031A4AAAAA	408E2031A4AAAAA	408E4031A4AAAAA
230–240	4	50	135	408F1031A4AAAAA	408F6031A4AAAAA	408F2031A4AAAAA	408F4031A4AAAAA
460–480	0	5	18	308BT041A4AAAAA	408B6041A4AAAAA	408B2041A4AAAAA	408B4041A4AAAAA
460–480	1	10	27	308CT041A4AAAAA	408C6041A4AAAAA	408C2041A4AAAAA	408C4041A4AAAAA
460–480	2	25	45	308DT041A4AAAAA	408D6041A4AAAAA	408D2041A4AAAAA	408D4041A4AAAAA
460–480	3	50	90	408E1041A4AAAAA	408E6041A4AAAAA	408E2041A4AAAAA	408E4041A4AAAAA
460–480	4	100	135	408F1041A4AAAAA	408F6041A4AAAAA	408F2041A4AAAAA	408F4041A4AAAAA
575–600	0	5	18	308BT051A4AAAAA	408B6051A4AAAAA	408B2051A4AAAAA	408B4051A4AAAAA
575–600	1	10	27	308CT051A4AAAAA	408C6051A4AAAAA	408C2051A4AAAAA	408C4051A4AAAAA
575–600	2	25	45	308DT051A4AAAAA	408D6051A4AAAAA	408D2051A4AAAAA	408D4051A4AAAAA
575–600	3	50	90	408E1051A4AAAAA	408E6051A4AAAAA	408E2051A4AAAAA	408E4051A4AAAAA
575–600	4	100	135	408F1051A4AAAAA	408F6051A4AAAAA	408F2051A4AAAAA	408F4051A4AAAAA

- NEMA size 0–4 starters with 115–120 volt, 60 Hz coil for separate control are available. To order, replace digits 8 and 9 of listed product numbers with 02. Example: CR408C2051A1AAAAA with 115–120 volt, 60 Hz coil for separate control becomes CR408C2021A1AAAAA.
- Motor full load current should not exceed continuous ampere rating of starter.

CR308, CR408 magnetic starters
Nonreversing, combination, NEMA type 1, 3R, 12, 4/4X

NEMA sizes 0–6, fusible disconnect type
600 volts maximum 50/60 Hz

Standard features
Includes a holding interlock, pressure terminals for the line and load connections, plus a 3-leg block type ambient compensated overload relay with manual reset. All enclosures include external reset. NO/NC contacts on the overload relay are provided. LED lights standard.

CR308/408 fusible disconnect (class R fuse clips)

					NEMA type 1	NEMA type 3R	NEMA type 12	NEMA type 4/4X
Voltage (60 Hz)	NEMA size	Maximum horsepower	Continuous amp rating	Fuse clip amp rating	Product number CR	Product number CR	Product number CR	Product number CR
200-208	0	3	18	30	308BT08RA4AAAAA	408B608RA4AAAAA	408B208RA4AAAAA	408B408RA4AAAAA
200-208	1	5	27	30	308CT08RA4AAAAA	408C608RA4AAAAA	408C208RA4AAAAA	408C408RA4AAAAA
200-208	1	7½	27	60	308CT08RB4AAAAA	408C608RB4AAAAA	408C208RB4AAAAA	408C408RB4AAAAA
200-208	2	10	45	60	308DT08RB4AAAAA	408D608RB4AAAAA	408D208RB4AAAAA	408D408RB4AAAAA
200-208	3	20	90	100	408E108RC4AAAAA	408E608RC4AAAAA	408E208RC4AAAAA	408E408RC4AAAAA
200-208	3	25	90	200[1]	408E108RD4AAAAA	408E608RD4AAAAA	408E208RD4AAAAA	408E408RD4AAAAA
200-208	4	40	135	200[1]	408F108RD4AAAAA	408F608RD4AAAAA	408F208RD4AAAAA	408F408RD4AAAAA
230-240	0	3	18	30	308BT03RA4AAAAA	408B603RA4AAAAA	408B203RA4AAAAA	408B403RA4AAAAA
230-240	1	5	27	30	308CT03RA4AAAAA	408C603RA4AAAAA	408C203RA4AAAAA	408C403RA4AAAAA
230-240	1	7½	27	60	308CT03RB4AAAAA	408C603RB4AAAAA	408C203RB4AAAAA	408C403RB4AAAAA
230-240	2	15	45	60	308DT03RB4AAAAA	408D603RB4AAAAA	408D203RB4AAAAA	408D403RB4AAAAA
230-240	3	25	90	100	408E103RC4AAAAA	408E603RC4AAAAA	408E203RC4AAAAA	408E403RC4AAAAA
230-240	3	30	90	200[1]	408E103RD4AAAAA	408E603RD4AAAAA	408E203RD4AAAAA	408E403RD4AAAAA
230-240	4	50	135	200[1]	408F103RD4AAAAA	408F603RD4AAAAA	408F203RD4AAAAA	408F403RD4AAAAA
460-480	0	5	18	30	308BT04R34AAAAA	408B604R34AAAAA	408B204R34AAAAA	408B404R34AAAAA
460-480	1	10	27	30	308CT04R34AAAAA	408C604R34AAAAA	408C204R34AAAAA	408C404R34AAAAA
460-480	2	25	45	60	308DT04R64AAAAA	408D604R64AAAAA	408D204R64AAAAA	408D404R64AAAAA
460-480	3	50	90	100	408E104R14AAAAA	408E604R14AAAAA	408E204R14AAAAA	408E404R14AAAAA
460-480	4	100	135	200[1]	408F104R24AAAAA	408F604R24AAAAA	408F204R24AAAAA	408F404R24AAAAA
575-600	0	5	18	30	308BT05R34AAAAA	408B605R34AAAAA	408B205R34AAAAA	408B405R34AAAAA
575-600	1	10	27	30	308CT05R34AAAAA	408C605R34AAAAA	408C205R34AAAAA	408C405R34AAAAA
575-600	2	15	45	30	308DT05R34AAAAA	408D605R34AAAAA	408D205R34AAAAA	408D405R34AAAAA
575-600	2	25	45	60	308DT05R64AAAAA	408D605R64AAAAA	408D205R64AAAAA	408D405R64AAAAA
575-600	3	30	90	60	408E105R64AAAAA	408E605R64AAAAA	408E205R64AAAAA	408E405R64AAAAA
575-600	3	50	90	100	408E105R14AAAAA	408E605R14AAAAA	408E205R14AAAAA	408E405R14AAAAA
575-600	4	60	135	100[1]	408F105R14AAAAA	408F605R14AAAAA	408F205R14AAAAA	408F405R14AAAAA
575-600	4	100	135	200[1]	408F105R24AAAAA	408F605R24AAAAA	408F205R24AAAAA	408F405R24AAAAA

[1]Oversized enclosure provided as standard.
- NEMA size 0–4 starters with 115–120 volt, 60 Hz coil for separate control are available. To order, replace digits 8 and 9 of listed product numbers with 02. Example: CR408D604R61AAAAA with 115–120 volt, 60 Hz coil for separate control becomes CR408D602R61AAAAA.
- For ordinary starting duty only
- Motor full load current should not exceed continuous ampere rating of starter.
- HP rating is based on dual element fuses.

CR308 magnetic starters

Nonreversing, combination, nonfusible and fusible disconnect type

Part number configuration
Valid for NEMA sizes 0–2, type 1 standard enclosure

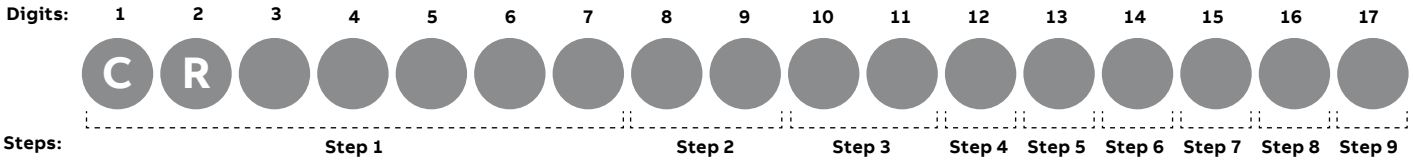

To configure the part number, use the tables below to fill in the digit boxes with the appropriate code.

Step 1 (digits 1–7) select NEMA size and enclosure

NEMA size	NEMA type 1 Standard enclosure CR
0	308BT
1	308CT
2	308DT

Note: All enclosures include external overload reset buttons.

Step 2 (digits 8, 9) select control voltage

Control circuit voltage and CPT	No CPT	Control fuses, no CPT	Standard size CPT
120 V w/ surge protector (SP)	01	F1	–
120 V	02	F2	–
240 V	03	F3	–
480 V	04	F4	–
600 V	05	F5	–
208 V	08	F8	–
24 V	09	–	–
240 V/120 V w/CPT	–	–	93
480 V/120 V w/CPT	–	–	94
600 V/120 V w/CPT	–	–	95
208 V/120 V w/CPT	–	–	98
240 V/120 V w/CPT and SP	–	–	33
480 V/120 V w/CPT and SP	–	–	34
600 V/120 V w/CPT and SP	–	–	35
208 V/120 V w/CPT and SP	–	–	38
240 V/24 V w/CPT	–	–	S3
480 V/24 V w/CPT	–	–	S4
600 V/24 V w/CPT	–	–	S5
208 V/24 V w/CPT	–	–	S8

Note: CPT includes 2 primary fuses and 1 secondary fuse.

Step 3 (digits 10, 11) select protective device

NEMA size	Code
All	1A

Note: All enclosures include external overload reset buttons.

Disconnect with class H fuse clips - for use with non-time delay/single element class H fuses

	200–208 V			230–240 V			460–480 V			575–600 V		
NEMA size	Max Hp	Fuse clip (amps)	Code	Max Hp	Fuse clip (amps)	Code	Max Hp	Fuse clip (amps)	Code	Max Hp	Fuse clip (amps)	Code
0	3	30	HA	3	30	HA	5	30	H3	5	30	H3
1	7½	60	HB	7½	60	HB	7½	30	H3	10	30	H3
	–	–	–	–	–	–	10	60	H6	–	60	H6
2	10	100	HC	15	100	HC	15	60	H6	20	60	H6
	–	–	–	–	–	–	25	100	H1[1]	25	100	H1[1]

[1]Oversized enclosure included as standard.

CR308 magnetic starters

Nonreversing, combination, nonfusible and fusible disconnect type

Part number configuration
Valid for NEMA sizes 0–2, type 1 standard enclosure

Step 3 (digits 10, 11) select protective device (continued)

Disconnect with class R fuse clips — for use with time delay/dual element class RK1/RK5 fuses

	200–208 V			230–240 V			460–480 V			575–600 V		
NEMA size	Max Hp	Fuse clip (amps)	Code	Max Hp	Fuse clip (amps)	Code	Max Hp	Fuse clip (amps)	Code	Max Hp	Fuse clip (amps)	Code
0	3	30	RA	3	30	RA	5	30	R3	5	30	R3
1	5	30	RA	5	30	RA	10	30	R3	10	30	R3
	7½	60	RB	7½	60	RB	–	–	–	–	–	–
2	10	60	RB	15	60	RB	–	30	R3	15	30	R3
	–	–	–	–	–	–	25	60	R6	25	60	R6

Disconnect with class J fuse clips — for use with time delay/dual element class J fuses

	200–208 V			230–240 V			460–480 V			575–600 V		
NEMA size	Max Hp	Fuse clip (amps)	Code	Max Hp	Fuse clip (amps)	Code	Max Hp	Fuse clip (amps)	Code	Max Hp	Fuse clip (amps)	Code
0	3	30	J3	3	30	J3	5	30	J3	5	30	J3
1	5	30	J3	5	30	J3	10	30	J3	10	30	J3
	7½	60	J6	7½	60	J6	–	–	–	–	–	–
2	10	60	J6	15	60	J6	–	30	J3	15	30	J3
	–	–	–	–	–	–	25	60	J6	25	60	J6

Step 4 (digit 12) select overload relay

Overload relay	Code
Thermal bi-metallic ambient compensated (1NC)	3
Thermal bi-metallic ambient compensated (1NO–1NC)	4
Solid state overload (1NO–1NC)	(#)

(#) Select code for solid state overload amp rating from standard or optional ranges table below.

Solid state overload relay — standard range

		200–208 V		230–240 V		460–480 V		575–600 V	
NEMA size	OL range	Max Hp	Code	Max Hp	Code	Max Hp	Code	Max Hp	Code
0	0.8–1.7	–	–	–	–	¾	D	1	D
	1.6–3.4	½	E	¾	E	2	E	2	E
	3.2–6.8	1	F	2	F	3	F	5	F
	6.5–13.5	3	G	3	G	5	G	–	–
1	6.5–13.5	–	–	–	–	7½	G	10	G
	13–27	7½	H	7½	H	10	H	–	–
2	13–27		–	–	–	20	H	25	H
	25–50	10	J	15	J	25	J	–	–

Optional ranges

	NEMA size	
OL amp range	0 and 1	2
0.4–0.85	C	–
0.8–1.7	D	–
1.6–3.4	E	–
3.2–6.8	F	–
6.5–13.5	G	G
13–27	H	H
25–50	–	J
17–35	–	–
35–70	–	–
65–135	–	–

Step 5 (digit 13) select auxiliary contacts

Aux contacts	Code
None	A
1NO	B
1NC	C
1NO–1NC	D
2NO	E
2NC	F
2NO–1NC	G
1NO–2NC	H

Step 5 (digit 13) select auxiliary contacts (continued)

Aux contacts	Code
3NO	J
3NC	K
4NO	L[2]
4NC	M[2]
2NO–2NC	N[2]
3NO–1NC	P[2]
1NO–3NC	R[2]

[2]Exceeds maximum number of contacts for some pilot light selections.
See step 8 (digit 16) table, page 39.

CR308 magnetic starters

Nonreversing, combination, nonfusible and fusible disconnect type

Part number configuration
Valid for NEMA sizes 0–2, type 1 standard enclosure

Step 6 (digit 14) select monitoring options

Device	Code
None[3]	A

[3]Phase failure relay is not available for CR308 series standard enclosures.
If this is required for your application, use CR408 series oversized enclosure.
See page 40.

Step 7 (digit 15) select push button/selector switch

Push button/selector switch — heavy duty	Code
None	A
Start/stop push button	J
H and-off-auto (HOA) selector switch	L
Off-on selector switch	M
HOA SS and start push button	S
Keyed HOA SS, key removal center pos.	N

Step 8 (digit 16) select pilot device

Type	Color - Functionality	Code
None		A
LED lights	Red — across coil	1
	Green — across coil	2
	Red — thru NO aux contact	3[4]
	Green — thru NC aux contact	4[4]
	Red — thru NO aux contact and green — thru NC aux contact	5[5]
	Red — across coil and green — thru NC aux contact	6[4]
	Red — across coil and green — thru NC aux contact and unwired amber	7[4]
Push-to-test lights	Red — across coil	R
	Green — across coil	S
	Red — thru NO aux contact	C[4]
	Green — thru NC aux contact	D[4]
	Red — thru NO aux contact and green — thru NC aux contact	E[5]
	Red — across coil and green — thru NC aux contact	V[4]
	Red — across coil and green — thru NC aux contact and unwired amber	Y[4]

[4]Maximum of 3 aux contacts may be added to Sizes 0 and 1.
[5]Maximum of 2 aux contacts may be added to Sizes 0 and 1. Maximum of 3 aux contacts may be added to sizes 2-4.
Note: Auxiliary contacts wired as part of pilot light selection are in addition to the auxiliary contacts selected from step 5 (digit 13) table, page 38, which are for customer/field connections.

Step 9 (digit 17) select control options

Device	Code
None	A

General note:
On NEMA size 3 and 4 starters, if selecting factory installed and wired operator devices (push buttons, selector switches, and/or pilot lights), then control circuit fusing, a control power transformer, or 120 V separate sourced control is required when the protective device is rated greater than 100 amps.

CR408 magnetic starters

Nonreversing, combination, nonfusible and fusible disconnect type

Part number configuration
Valid for NEMA sizes 0-4

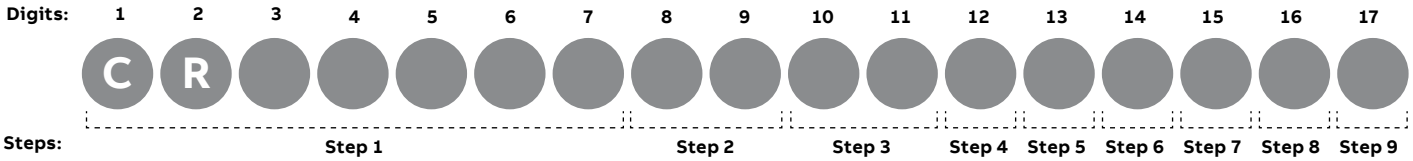

To configure the part number, use the tables below to fill in the digit boxes with the appropriate code.

Step 1 (digits 1–7) select NEMA size and enclosure

	NEMA type 1		NEMA type 3R		NEMA type 12		NEMA type 4/4X	
NEMA size	Standard enclosure CR	Oversized enclosure CR	Standard enclosure CR	Oversized enclosure CR	Standard enclosure CR	Oversized enclosure CR	Standard enclosure CR	Oversized enclosure CR
0	Use CR308	408B5	408B6	408BR	408B2	408B7	408B4	408BS
1	Use CR308	408C5	408C6	408CR	408C2	408C7	408C4	408CS
2	Use CR308	408D5	408D6	408DR	408D2	408D7	408D4	408DS
3	408E1	408E5[1]	408E6	408ER[1]	408E2	408E7[1]	408E4	408ES[1]
4[2]	408F1	–	408F6	–	408F2	–	408F4	–

Note: All enclosures include external overload reset buttons. NEMA 4 enclosures are stainless steel.
[1]Oversized enclosure provided as standard with 200 amp fusible disconnect.
[2]Oversized enclosure provided as standard with any NEMA size 4 fusible/nonfusible.

Step 2 (digits 8, 9) select control voltage (no CPT and standard size CPT)

Control circuit voltage and CPT	No CPT	Control fuses, no CPT	Standard size CPT
120 V w/ surge protector (SP)	01	F1	–
120 V	02	F2	–
240 V	03	F3	–
480 V	04	F4	–
600 V	05	F5	–
208 V	08	F8	–
24 V[3]	09	–	–
240 V/120 V w/CPT	–	–	93
480 V/120 V w/CPT	–	–	94
600 V/120 V w/CPT	–	–	95
208 V/120 V w/CPT	–	–	98
240 V/120 V w/CPT and SP	–	–	33
480 V/120 V w/CPT and SP	–	–	34
600 V/120 V w/CPT and SP	–	–	35
208 V/120 V w/CPT and SP	–	–	38
240 V/24 V w/CPT[3]	–	–	S3
480 V/24 V w/CPT[3]	–	–	S4
600 V/24 V w/CPT[3]	–	–	S5
208 V/24 V w/CPT[3]	–	–	S8

Note: CPT includes 2 primary fuses and 1 secondary fuse.
[3]24 V coils are not available for NEMA size 3 and above.

CR408 magnetic starters

Nonreversing, combination, nonfusible and fusible disconnect type

Part number configuration
Valid for NEMA sizes 0-4

Step 3 (digits 10, 11) select protective device

Disconnect without fuse clips

NEMA size	Code
All	1A[2]

Disconnect with class H fuse clips — for use with non-time delay/single element class H fuses

	200–208 V			230–240 V			460–480 V			575–600 V		
NEMA size	Max Hp	Fuse clip (amps)	Code	Max Hp	Fuse clip (amps)	Code	Max Hp	Fuse clip (amps)	Code	Max Hp	Fuse clip (amps)	Code
0	3	30	HA	3	30	HA	5	30	H3	5	30	H3
1	7½	60	HB	7½	60	HB	7½	30	H3	10	30	H3
	–	–	–	–	–	–	10	60	H6	–	60	H6
2	10	100	HC	15	100	HC	15	60	H6	20	60	H6
	–	–	–	–	–	–	25	100	H1	25	100	H1
3[1]	25	200	HD	30	200	HD	30	100	H1	30	100	H1
	–	–	–	–	–	–	50	200	H2	50	200	H2
4[2]	40	400	HE	50	400	HE	60	200	H2	60	200	H2
	–	–	–	–	–	–	100	400	H4	100	400	H4

[1]Oversized enclosure provided as standard with 200 amp fusible disconnect
[2]Oversized enclosure provided as standard with any NEMA size 4 fusible/nonfusible

Disconnect with class R fuse clips — for use with time delay/dual element class RK1/RK5 fuses

	200–208 V			230–240 V			460–480 V			575–600 V		
NEMA size	Max Hp	Fuse clip (amps)	Code	Max Hp	Fuse clip (amps)	Code	Max Hp	Fuse clip (amps)	Code	Max Hp	Fuse clip (amps)	Code
0	3	30	RA	3	30	RA	5	30	R3	5	30	R3
1	5	30	RA	5	30	RA	10	30	R3	10	30	R3
	7½	60	RB	7½	60	RB	–	–	–	–	–	–
2	10	60	RB	15	60	RB	–	30	R3	15	30	R3
	–	–	–	–	–	–	25	60	R6	25	60	R6
3[1]	20	100	RC	25	100	RC	–	60	R6	30	60	R6
	25	200	RD	30	200	RD	50	100	R1	50	100	R1
4[2]	40	200	RD	50	200	RD	–	100	R1	60	100	R1
	–	–	–	–	–	–	100	200	R2	100	200	R2

[1]Oversized enclosure provided as standard with 200 amp fusible disconnect
[2]Oversized enclosure provided as standard with any NEMA size 4 fusible/nonfusible

CR408 magnetic starters

Nonreversing, combination, nonfusible and fusible disconnect type

Part number configuration
Valid for NEMA sizes 0–4

Step 3 (digits 10, 11) select protective device (continued)

Disconnect with class J fuse clips — for use with time delay/dual element class J fuses

	200–208 V			230–240 V			460–480 V			575–600 V		
NEMA size	Max Hp	Fuse clip (amps)	Code	Max Hp	Fuse clip (amps)	Code	Max Hp	Fuse clip (amps)	Code	Max Hp	Fuse clip (amps)	Code
0	3	30	J3	3	30	J3	5	30	J3	5	30	J3
1	5	30	J3	5	30	J3	10	30	J3	10	30	J3
	7½	60	J6	7½	60	J6	–	–	–	–	–	–
2	10	60	J6	15	60	J6	–	30	J3	15	30	J3
	–	–	–	–	–	–	25	60	J6	25	60	J6
3[1]	20	100	J2	25	100	J1	–	60	J6	30	60	J6
	25	200	J2	30	200	J2	50	100	J1	50	100	J1
4[2]	40	200	J2	50	200	J2	–	100	J1	60	100	J1
	–	–	–	–	–	–	100	200	J2	100	200	J2

[1]Oversized enclosure provided as standard with 200 amp fusible disconnect
[2]Oversized enclosure provided as standard with any NEMA size 4 fusible/nonfusible

Step 4 (digit 12) select overload relay

Overload relay	Code
Thermal bi-metallic ambient compensated (1NC)	3
Thermal bi-metallic ambient compensated (1NO–1NC)	4
Solid state overload (1NO–1NC)	(#)

(#) Select code for solid state overload amp rating from standard or optional ranges table at right and below.

Solid state overload relay - standard range

		200–208 V		230–240 V		460–480 V		575–600 V	
NEMA size	OL range	Max Hp	Code	Max Hp	Code	Max Hp	Code	Max Hp	Code
0	0.8–1.7	–	–	–	–	¾	D	1	D
	1.6–3.4	1/2	E	3/4	E	2	E	2	E
	3.2–6.8	1	F	2	F	3	F	5	F
	6.5–13.5	3	G	3	G	5	G	–	–
1	6.5–13.5	–	–	–	–	7½	G	10	G
	13–27	7½	H	7½	H	10	H	–	–
2	13–27	–	–	–	–	20	H	25	H
	25–50	10	J	15	J	25	J	–	–
3	17–35	–	–	–	–	–	–	30	K
	35–70	20	L	25	L	50	L	50	L
	65–135	25	M	30	M	–	–	–	–
4	65–135	40	M	50	M	100	M	100	M

Solid state overload relay — optional ranges

			NEMA size
OL amp range	0 and 1	2	3 and 4
0.4–0.85	C	–	–
0.8–1.7	D	–	–
1.6–3.4	E	–	–
3.2–6.8	F	–	–
6.5–13.5	G	G	–
13–27	H	H	–
25–50	–	J	–
17–35	–	–	K
35–70	–	–	L
65–135	–	–	M

Step 5 (digit 13) select auxiliary contacts

Aux contacts	Code
None	A
1NO	B
1NC	C
1NO–1NC	D
2NO	E
2NC	F
2NO-1NC	G
1NO-2NC	H

Step 5 (digit 13) select auxiliary contacts (continued)

Aux contacts	Code
3NO	J
3NC	K
4NO	L[5]
4NC	M[5]
2NO-2NC	N[5]
3NO-1NC	P[5]
1NO-3NC	R[5]

[5]Exceeds maximum number of contacts for some pilot light selections. See step 8 (digit 16) table, page 43.

CR408 magnetic starters

Nonreversing, combination, nonfusible and fusible disconnect type

Part number configuration
Valid for NEMA sizes 0-4

Step 6 (digit 14) select monitoring options

Device	Code
None	A
Phase failure relay with undervoltage protection (panel mounted) — 190–480 V (PFR with UV)	C[2,7]
Phase failure relay with undervoltage protection (panel mounted) — 575 V (PFR with UV)	D[2,7]
Phase failure relay — 208 V (PFR)	E[4,7]
Phase failure relay — 240 V (PFR)	F[4,7]
Phase failure relay — 480 V (PFR)	G[4,7]
Phase failure relay — 575 V (PFR)	H[4,7]
Elapsed time meter (120 V/60 Hz) wired across coil (ETM)	1[2,6]
ETM + PFR w/UV (190–480 V)	L[2,6,7]
ETM + PFR w/UV (575 V)	N[2,6,7]
ETM + PFR (208 V)	P[2,4,6,7]
ETM + PFR (240 V)	Q[2,4,6,7]
ETM + PFR (480 V)	R[2,4,6,7]
ETM + PFR (575 V)	S[2,4,6,7]

[2]Requires oversized enclosure for NEMA sizes 0-2. Select proper NEMA size and enclosure type from step 1 (digits 1-7) table, page 40.
[4]Available for type 1 enclosure only.
[6]Requires 120 V control circuit voltage or CPT w/ 120 V secondary.
[7]Requires oversized enclosure for phase failure relay.

Step 7 (digit 15) select push button/selector switch

Push button/selector switch — heavy duty	code
None	A
Start/stop push button	J
H and-off-auto (HOA) selector switch	L
Off-on selector switch	M
HOA SS and start push button	S
Keyed HOA SS, key removal center pos.	N

Step 8 (digit 16) select pilot device

Type	Color - functionality	Code
None		A
LED lights	Red — across coil	1
	Green — across coil	2
	Red — thru NO aux contact	3[9]
	Green — thru NC aux contact	4[9]
	Red — thru NO aux contact and green — thru NC aux contact	5[10]
	Red — across coil and green — thru NC aux contact	6[9]
	Red — across coil and green — thru NC aux contact and unwired amber	7[9]
Push-to-test lights	Red — across coil	R
	Green — across coil	S
	Red — thru NO aux contact	C[9]
	Green — thru NC aux contact	D[9]
	Red — thru NO aux contact and green — thru NC aux contact	E[10]
	Red — across coil and green — thru NC aux contact	V[9]
	Red — across coil and green — thru NC aux contact and unwired amber	Y[9]

[9]Maximum of 3 aux contacts may be added to sizes 0 and 1.
[10]Maximum of 2 aux contacts may be added to sizes 0 and 1. Maximum of 3 aux contacts may be added to sizes 2-4.
Note: Auxiliary contacts wired as part of pilot light selection are in addition to the auxiliary contacts selected from step 5 (digit 13) table, page 42, which are for customer/field connections.

CR408 magnetic starters

Nonreversing, combination, nonfusible and fusible disconnect type

Part number configuration
Valid for NEMA sizes 0-4

—

9 (digit 14) select control options

Device	Code
None	A
DIN rail — for customer use	D[4]
12 point terminal strip — unwired (12 PT strip)	E[4]
Space heater with NC contact	H[4,12]
DIN rail + 12 PT strip + space heater	L[4,12]

[4]Requires oversized enclosure for NEMA sizes 0-2. Select proper NEMA size and enclosure type from step 1 (digits 1-7) table, page 40.
[12]Maximum number of auxiliary contacts shall be reduced by 1.

General note:
On NEMA size 3 and 4 starters, if selecting factory installed and wired operator devices (push buttons, selector switches, and/or pilotlights), then control circuit fusing, a control power transformer or 120 V separate sourced control is required when the protective device is rated greater than 100 amps.

CR307, CR407 magnetic starters

Nonreversing, combination, NEMA type 1, 3R, 12, 4/4X

NEMA sizes 0-6, thermal magnetic circuit breaker type
600 volts maximum 50/60 Hz

Standard features

Tmax® XT circuit breaker. Includes a holding interlock, pressure terminals for the line and load connections, plus a 3-leg block type ambient compensated overload relay with manual reset. All enclosures include external reset. NO/NC contacts on the overload relay are provided. LED lights standard.

CR307/407 thermal magnetic circuit breaker type

					NEMA type 1	NEMA type 3R	NEMA type 12	NEMA type 4/4X
Voltage (60 Hz)	NEMA size	Maximum horsepower	Continuous amp rating	CB rating (amps)	Product number CR	Product number CR	Product number CR	Product number CR
200-208	0	2	18	15	307BT08TC4AAAAA	407B608TC4AAAAA	407B208TC4AAAAA	407B408TC4AAAAA
200-208	0	3	18	20	307BT08TD4AAAAA	407B608TD4AAAAA	407B208TD4AAAAA	407B408TD4AAAAA
200-208	1	5	27	30	307CT08TF4AAAAA	407C608TF4AAAAA	407C208TF4AAAAA	407C408TF4AAAAA
200-208	1	7½	27	40	307CT08TG4AAAAA	407C608TG4AAAAA	407C208TG4AAAAA	407C408TG4AAAAA
200-208	2	10	45	50	307DT08TH4AAAAA	407D608TH4AAAAA	407D208TH4AAAAA	407D408TH4AAAAA
200-208	3	15	90	80	407E108TL4AAAAA	407E608TL4AAAAA	407E208TL4AAAAA	407E408TL4AAAAA
200-208	3	20	90	100	407E108TN4AAAAA	407E608TN4AAAAA	407E208TN4AAAAA	407E408TN4AAAAA
200-208	3	25	90	125	407E108TQ4AAAAA	407E608TQ4AAAAA	407E208TQ4AAAAA	407E408TQ4AAAAA
200-208	4	30	135	150	407F108TR4AAAAA	407F608TR4AAAAA	407F208TR4AAAAA	407F408TR4AAAAA
200-208	4	40	135	200	407F108TT4AAAAA	407F608TT4AAAAA	407F208TT4AAAAA	407F408TT4AAAAA
230-240	0	3	18	15	307BT03TC4AAAAA	407B603TC4AAAAA	407B203TC4AAAAA	407B403TC4AAAAA
230-240	1	5	27	25	307CT03TE4AAAAA	407C603TE4AAAAA	407C203TE4AAAAA	407C403TE4AAAAA
230-240	1	7½	27	40	307CT03TG4AAAAA	407C603TG4AAAAA	407C203TG4AAAAA	407C403TG4AAAAA
230-240	2	10	45	50	307DT03TH4AAAAA	407D603TH4AAAAA	407D203TH4AAAAA	407D403TH4AAAAA
230-240	2	15	45	70	307DT03TK4AAAAA	407D603TK4AAAAA	407D203TK4AAAAA	407D403TK4AAAAA
230-240	3	20	90	90	407E103TM4AAAAA	407E603TM4AAAAA	407E203TM4AAAAA	407E403TM4AAAAA
230-240	3	25	90	110	407E103TP4AAAAA	407E603TP4AAAAA	407E203TP4AAAAA	407E403TP4AAAAA
230-240	3	30	90	125	407E103TQ4AAAAA	407E603TQ4AAAAA	407E203TQ4AAAAA	407E403TQ4AAAAA
230-240	4	40	135	175	407F103TS4AAAAA	407F603TS4AAAAA	407F203TS4AAAAA	407F403TS4AAAAA
230-240	4	50	135	200	407F103TT4AAAAA	407F603TT4AAAAA	407F203TT4AAAAA	407F403TT4AAAAA
460-480	0	5	18	15	307BT04TC4AAAAA	407B604TC4AAAAA	407B204TC4AAAAA	407B404TC4AAAAA
460-480	1	7½	27	20	307CT04TD4AAAAA	407C604TD4AAAAA	407C204TD4AAAAA	407C404TD4AAAAA
460-480	1	10	27	25	307CT04TE4AAAAA	407C604TE4AAAAA	407C204TE4AAAAA	407C404TE4AAAAA
460-480	2	15	45	40	307DT04TG4AAAAA	407D604TG4AAAAA	407D204TG4AAAAA	407D404TG4AAAAA
460-480	2	20	45	50	307DT04TH4AAAAA	407D604TH4AAAAA	407D204TH4AAAAA	407D404TH4AAAAA
460-480	2	25	45	60	307DT04TJ4AAAAA	407D604TJ4AAAAA	407D204TJ4AAAAA	407D404TJ4AAAAA
460-480	3	30	90	60	407E104TJ4AAAAA	407E604TJ4AAAAA	407E204TJ4AAAAA	407E404TJ4AAAAA
460-480	3	40	90	80	407E104TL4AAAAA	407E604TL4AAAAA	407E204TL4AAAAA	407E404TL4AAAAA
460-480	3	50	90	100	407E104TN4AAAAA	407E604TN4AAAAA	407E204TN4AAAAA	407E404TN4AAAAA
460-480	4	60	135	125	407F104TQ4AAAAA	407F604TQ4AAAAA	407F204TQ4AAAAA	407F404TQ4AAAAA
460-480	4	75	135	150	407F104TR4AAAAA	407F604TR4AAAAA	407F204TR4AAAAA	407F404TR4AAAAA
460-480	4	100	135	200	407F104TT4AAAAA	407F604TT4AAAAA	407F204TT4AAAAA	407F404TT4AAAAA

[1]For ordinary starting duty only.

- NEMA size 0–4 starters with 115–120 volt, 60 Hz coil for separate control are available. To order, replace digits 8 and 9 of listed product numbers with 02. Example: CR407B604TC1AAAAA with 115–120 volt, 60 Hz coil for separate control becomes CR407B602TC1AAAAA.
- Motor full load current should not exceed continuous ampere rating of starter.

CR307, CR407 magnetic starters

Nonreversing, combination, NEMA type 1, 3R, 12, 4/4X

NEMA sizes 0-6, thermal magnetic circuit breaker type
600 volts maximum 50/60 Hz

Standard features
Tmax® XT circuit breaker. Includes a holding interlock, pressure terminals for the line and load connections, plus a 3-leg block type ambient compensated overload relay with manual reset. All enclosures include external reset. NO/NC contacts on the overload relay are provided. LED lights standard.

CR307/407 thermal magnetic circuit breaker type (continued)

					NEMA type 1	NEMA type 3R	NEMA type 12	NEMA type 4/4X
Voltage (60 Hz)	NEMA size	Maximum horsepower	Continuous amp rating	CB rating (amps)	Product number CR	Product number CR	Product number CR	Product number CR
575-600	0	5	18	15	307BT05TC4AAAAA	407B605TC4AAAAA	407B205TC4AAAAA	407B405TC4AAAAA
575-600	1	7 ½	27	15	307CT05TC4AAAAA	407C605TC4AAAAA	407C205TC4AAAAA	407C405TC4AAAAA
575-600	1	10	27	20	307CT05TD4AAAAA	407C605TD4AAAAA	407C205TD4AAAAA	407C405TD4AAAAA
575-600	2	15	45	30	307DT05TF4AAAAA	407D605TF4AAAAA	407D205TF4AAAAA	407D405TF4AAAAA
575-600	2	20	45	40	307DT05TG4AAAAA	407D605TG4AAAAA	407D205TG4AAAAA	407D405TG4AAAAA
575-600	2	25	45	50	307DT05TH4AAAAA	407D605TH4AAAAA	407D205TH4AAAAA	407D405TH4AAAAA
575-600	3	30	90	50	407E105TH4AAAAA	407E605TH4AAAAA	407E205TH4AAAAA	407E405TH4AAAAA
575-600	3	40	90	70	407E105TK4AAAAA	407E605TK4AAAAA	407E205TK4AAAAA	407E405TK4AAAAA
575-600	3	50	90	80	407E105TL4AAAAA	407E605TL4AAAAA	407E205TL4AAAAA	407E405TL4AAAAA
575-600	4	60	135	100	407F105TN4AAAAA	407F605TN4AAAAA	407F205TN4AAAAA	407F405TN4AAAAA
575-600	4	75	135	125	407F105TQ4AAAAA	407F605TQ4AAAAA	407F205TQ4AAAAA	407F405TQ4AAAAA
575-600	4	100	135	150	407F105TR4AAAAA	407F605TR4AAAAA	407F205TR4AAAAA	407F405TR4AAAAA

[1]For ordinary starting duty only.
- NEMA size 0–4 starters with 115–120 volt, 60 Hz coil for separate control are available. To order, replace digits 8 and 9 of listed product numbers with 02. Example: CR407B604TC1AAAAA with 115–120 volt, 60 Hz coil for separate control becomes CR407B602TC1AAAAA.
- Motor full load current should not exceed continuous ampere rating of starter.

CR307 magnetic starters

Nonreversing, combination, thermal magnetic circuit breaker type

Part number configuration
Valid for NEMA sizes 0-2, type 1 standard enclosure

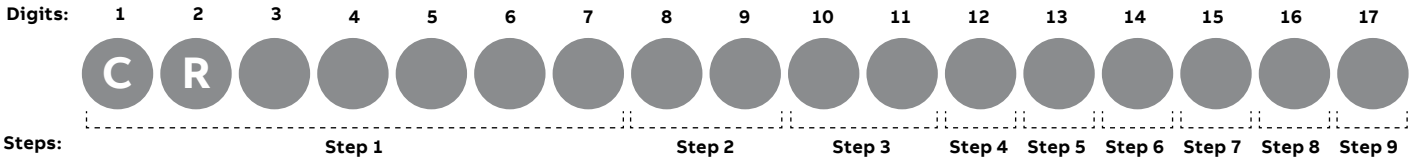

To configure the part number, use the tables below to fill in the digit boxes with the appropriate code.

Step 1 (digits 1-7) select NEMA size and enclosure

NEMA size	NEMA type 1 Standard enclosure CR
0	307BT
1	307CT
2	307DT

Note: All enclosures include external overload reset buttons.

Step 2 (digits 8, 9) select control voltage

Control circuit voltage and CPT	No CPT	Control fuses, no CPT	Standard size CPT	Standard size CPT + 100 VA
120 V w/ surge protector (SP)	01	F1	–	–
120 V	02	F2	–	–
240 V	03	F3	–	–
480 V	04	F4	–	–
600 V	05	F5	–	–
208 V	08	F8	–	–
24 V	09	–	–	–
240 V/120 V w/CPT	–	–	93	13
480 V/120 V w/CPT	–	–	94	14
600 V/120 V w/CPT	–	–	95	15
208 V/120 V w/CPT	–	–	98	18
240 V/120 V w/CPT and SP	–	–	33	53
480 V/120 V w/CPT and SP	–	–	34	54
600 V/120 V w/CPT and SP	–	–	35	55
208 V/120 V w/CPT and SP	–	–	38	58
240 V/24 V w/CPT	–	–	S3	A3
480 V/24 V w/CPT	–	–	S4	A4
600 V/24 V w/CPT	–	–	S5	A5
208 V/24 V w/CPT	–	–	S8	A8

Note: CPT includes 2 primary fuses and 1 secondary fuse.

Step 3 (digits 10, 11) select protective device

Thermal-mag circuit breaker — Spectra™ series

	200–208 V			240 V			480 V			600 V		
NEMA size	Max Hp	CB rating (amps)	Code	Max Hp	CB rating (amps)	Code	Max Hp	CB rating (amps)	Code	Max Hp	CB rating (amps)	Code
0	2	15	TC	3	15	TC	5	15	TC	5	15	TC
	3	15	TC	–	–	–	–	–	–	–	–	–
1	–	–	–	–	–	–	–	–	–	7½	15	TC
	5	25	TE	5	25	TE	7½	25	TE	–	–	–
	–	–	–	–	–	–	–	–	–	10	25	TE
	7½	40	TG	7½	40	TG	10	25	TE	10	20	TD
2	–	–	–	–	–	–	15	40	TG	15	40	TG
	10	60	TJ	10	60	TJ	–	–	–	–	–	–
	–	–	–	–	–	–	–	–	–	20	40	TG
	–	–	–	15	60	TJ	20	60	TJ	–	–	–
	–	–	–	–	–	–	25	60	TJ	25	60	TJ

CR307 magnetic starters

Nonreversing, combination, thermal magnetic circuit breaker type

Part number configuration
Valid for NEMA sizes 0-2, type 1 standard enclosure

Step 4 (digit 12) select overload relay

Overload relay	Code
Thermal bi-metallic ambient compensated (1NC)	3
Thermal bi-metallic ambient compensated (1NO–1NC)	4
Solid state overload (1NO–1NC)	(#)

(#) Select code for solid state overload amp rating from standard or optional ranges table below.

Solid state overload relay — standard range

		200–208 V		230–240 V		460–480 V		575–600 V	
NEMA size	OL range	Max Hp	Code	Max Hp	Code	Max Hp	Code	Max Hp	Code
0	0.8–1.7	–	–	–	–	3/4	D	1	D
	1.6–3.4	½	E	¾	E	2	E	2	E
	3.2–6.8	1	F	2	F	3	F	5	F
	6.5–13.5	3	G	3	G	5	G	–	–
1	6.5–13.5	–	–	–	–	7½	G	10	G
	13–27	7½	H	7½	H	10	H	–	–
2	13–27	–	–	–		20	H	25	H
	25–50	10	J	15	J	25	J	–	–

Optional ranges

	NEMA size	
OL amp range	0 and 1	2
0.4–0.85	C	–
0.8–1.7	D	–
1.6–3.4	E	–
3.2–6.8	F	–
6.5–13.5	G	G
13–27	H	H
25–50	–	J
17–35	–	–
35–70	–	–
65–135	–	–

Step 5 (digit 13) select auxiliary contacts

Aux contacts	Code
None	A
1NO	B
1NC	C
1NO–1NC	D
2NO	E
2NC	F
2NO–1NC	G
1NO–2NC	H
3NO	J
3NC	K
4NO	L[1]
4NC	M[1]
2NO–2NC	N[1]
3NO–1NC	P[1]
1NO–3NC	R[1]

[1]Exceeds maximum number of contacts for some pilot light selections. See step 8 (digit 16) table, page 49.

Step 6 (digit 14) select monitoring options

Device	Code
None[2]	A

[2]Phase failure relay is not available for CR307 series standard enclosures. If this is required for your application, use CR407 series oversized enclosure. See page 50.

Step 7 (digit 15) select push button/selector switch

Push button/selector switch — heavy duty	Code
None	A
Start/stop push button	J
H and-off-auto (HOA) selector switch	L
Off-on selector switch	M
HOA SS and start push button	S
Keyed HOA SS, key removal center pos.	N

CR307 magnetic starters

Nonreversing, combination, thermal magnetic circuit breaker type

Part number configuration
Valid for NEMA sizes 0-2, type 1 standard enclosure

Step 8 (digit 16) select pilot device

Pilot light (heavy duty) type	Color — functionality	Code
None		A
LED lights	Red — across coil	1
	Green — across coil	2
	Red — thru NO aux contact	3[3]
	Green — thru NC aux contact	4[3]
	Red — thru NO aux contact and green — thru NC aux contact	5[4]
	Red — across coil and green — thru NC aux contact	6[3]
	Red — across coil and green — thru NC aux contact and unwired amber	7[3]
Push-to-test lights	Red — across coil	R
	Green — across coil	S
	Red — thru NO aux contact	C[3]
	Green — thru NC aux contact	D[3]
	Red — thru NO aux contact and green — thru NC aux contact	E[4]
	Red — across coil and green — thru NC aux contact	V[3]
	Red — across coil and green — thru NC aux contact and unwired amber	Y[3]

[3]Maximum of 3 aux contacts may be added to sizes 0 and 1.
[4]Maximum of 2 aux contacts may be added to sizes 0 and 1. Maximum of 3 aux contacts may be added to sizes 2-4.
Note: Auxiliary contacts wired as part of pilot light selection are in addition to the auxiliary contacts selected from Step 5 (digit 13) table, page 48, which are for customer/field connections.

Step 9 (digit 17) select control options

Device	Code
None	A

General note:
On NEMA size 3 and 4 starters if selecting factory installed and wired operator devices (push buttons, selector switches, and/or pilot lights) then control circuit fusing, a control power transformer, or 120 V separate sourced control is required when the protective device is rated greater than 100 amps.

CR407 magnetic starters

Nonreversing, combination, thermal magnetic circuit breaker type

Part number configuration
Valid for NEMA sizes 0–4

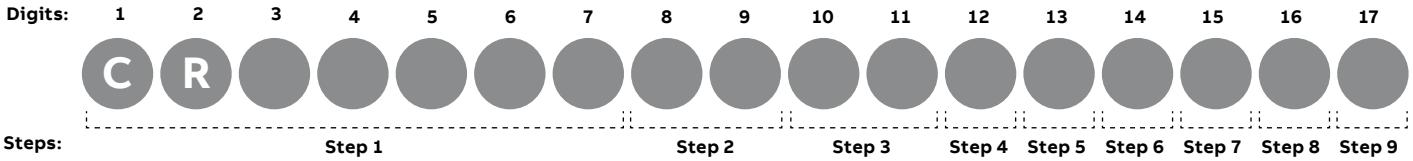

To configure the part number, use the tables below to fill in the digit boxes with the appropriate code.

Step 1 (digits 1–7) select NEMA size and enclosure

	NEMA type 1		NEMA type 3R		NEMA type 12		NEMA type 4/4X	
NEMA size	Standard enclosure CR	Oversized enclosure CR	Standard enclosure CR	Oversized enclosure CR	Standard enclosure CR	Oversized enclosure CR	Standard enclosure CR	Oversized enclosure CR
0	Use CR307	407B5	407B6	407BR	407B2	407B7	407B4	407BS
1	Use CR307	407C5	407C6	407CR	407C2	407C7	407C4	407CS
2	Use CR307	407D5	407D6	407DR	407D2	407D7	407D4	407DS
3	407E1	407E5	407E6	407ER	407E2	407E7	407E4	407ES
4	407F1	407F5	407F6	407FR	407F2	407F7	407F4	407FS

Note: All enclosures include external overload reset buttons. NEMA 4 enclosures are stainless steel.

Step 2 (digits 8, 9) select control voltage (no CPT and standard size CPT)

Control circuit voltage and CPT	No CPT	Control fuses, no CPT	Standard size CPT
120 V w/ surge protector (SP)	01	F1	–
120 V	02	F2	–
240 V	03	F3	–
480 V	04	F4	–
600 V	05	F5	–
208 V	08	F8	–
24 V[1]	09	–	–
240 V/120 V w/CPT	–	–	93
480 V/120 V w/CPT	–	–	94
600 V/120 V w/CPT	–	–	95
208 V/120 V w/CPT	–	–	98
240 V/120 V w/CPT and SP	–	–	33
480 V/120 V w/CPT and SP	–	–	34
600 V/120 V w/CPT and SP	–	–	35
208 V/120 V w/CPT and SP	–	–	38
240 V/24 V w/CPT[1]	–	–	S3
480 V/24 V w/CPT[1]	–	–	S4
600 V/24 V w/CPT[1]	–	–	S5
208 V/24 V w/CPT[1]	–	–	S8

Step 2 (digits 8, 9) select control voltage (extra capacity CPT + 100 VA and 200 VA)

Control circuit voltage and CPT	Standard size CPT + 100 VA	Standard size CPT + 200 VA
120 V w/ surge protector (SP)	–	–
120 V	–	–
240 V	–	–
480 V	–	–
600 V	–	–
208 V	–	–
24 V[1]	–	–
240 V/120 V w/CPT	13	23
480 V/120 V w/CPT	14	24
600 V/120 V w/CPT	15	25
208 V/120 V w/CPT	18	28
240 V/120 V w/CPT and SP	53	63
480 V/120 V w/CPT and SP	54	64
600 V/120 V w/CPT and SP	55	65
208 V/120 V w/CPT and SP	58	68
240 V/24 V w/CPT[1]	A3	B3
480 V/24 V w/CPT[1]	A4	B4
600 V/24 V w/CPT[1]	A5	B5
208 V/24 V w/CPT[1]	A8	B8

Note: CPT includes 2 primary fuses and 1 secondary fuse.
[1]24 V coils not available for NEMA size 3 and 4.
[2]Requires oversized enclosure for NEMA sizes 0-2. Select proper NEMA size and enclosure type from step 1 (digits 1-7) table.

CR407 magnetic starters

Nonreversing, combination, thermal magnetic circuit breaker type

Part number configuration
Valid for NEMA sizes 0–4

Step 3 (digits 10, 11) select protective device

Thermal-mag circuit breaker - Spectra™ series

	200–208 V			240 V			480 V			600 V		
NEMA size	Max Hp	CB rating (amps)	Code	Max Hp	CB rating (amps)	Code	Max Hp	CB rating (amps)	Code	Max Hp	CB rating (amps)	Code
0	2	15	TC	3	15	TC	5	15	TC	5	15	TC
	3	15	TC	–	–	–	–	–	–	–	–	–
1	–	–	–	–	–	–	–	–	–	7½	15	TC
	5	25	TE	5	25	TE	7½	25	TE	–	–	–
	–	–	–	–	–	–	–	–	–	10	25	TE
	7½	40	TG	7½	40	TG	10	25	TE	10	20	TD
2	–	–	–	–	–	–	15	40	TG	15	40	TG
	10	60	TJ	10	60	TJ	–	–	–	–	–	–
	–	–	–	–	–	–	–	–	–	20	40	TG
	–	–	–	15	60	TJ	20	60	TJ	–	–	–
	–	–	–	–	–	–	25	60	TJ	25	60	TJ
3	–	–	–	–	–	–	30	60	TJ	30	60	TJ
	15	100	TN	20	100	TN	–	–	–	–	–	–
	–	–	–	–	–	–	–	–	–	40	60	TJ
	20	100	TN	25	100	TN	40	100	TN	–	–	–
	–	–	–	–	–	–	50	100	TN	50	100	TN
	25	125	TQ	30	125	TQ	–	–	–	–	–	–
4	30	150	TR	–	–	–	60	150	TR	60	150	TR
	–	–	–	40	200	TT	–	–	–	–	–	–
	–	–	–	–	–	–	75	150	TR	75	150	TR
	40	200	TT	50	200	TT	–	–	–	–	–	–
	–	–	–	–	–	–	100	200	TT	100	200	TT

Step 4 (digit 12) select overload relay

Overload relay	Code
Thermal bi-metallic ambient compensated (1NC)	3
Thermal bi-metallic ambient compensated (1NO–1NC)	4
Solid state overload (1NO–1NC)	(#)

(#) Select code for solid state overload amp rating from standard or optional ranges below.

Solid state overload relay - standard range

		200–208 V		230–240 V		460–480 V		575–600 V	
NEMA size	OL range	Max Hp	Code	Max Hp	Code	Max Hp	Code	Max Hp	Code
0	0.8–1.7	–	–	–	–	3/4	D	1	D
	1.6–3.4	1/2	E	3/4	E	2	E	2	E
	3.2–6.8	1	F	2	F	3	F	5	F
	6.5–13.5	3	G	3	G	5	G	–	–
1	6.5–13.5	–	–	–	–	7½	G	10	G
	13–27	7½	H	7½	H	10	H	–	–
2	13–27	–	–	–	–	20	H	25	H
	25–50	10	J	15	J	25	J	–	–
3	17–35	–	–	–	–	–	–	30	K
	35–70	20	L	25	L	50	L	50	L
	65–135	25	M	30	M	–	–	–	–
4	65–135	40	M	50	M	100	M	100	M

Optional ranges

	NEMA size		
OL amp range	0 and 1	2	3 and 4
0.4–0.85	C	–	–
0.8–1.7	D	–	–
1.6–3.4	E	–	–
3.2–6.8	F	–	–
6.5–13.5	G	G	–
13–27	H	H	–
25–50	–	J	–
17–35	–	–	K
35–70	–	–	L
65–135	–	–	M

CR407 magnetic starters

Nonreversing, combination, thermal magnetic circuit breaker type

Part number configuration
Valid for NEMA sizes 0–4

Step 5 (digit 13) select auxiliary contacts

Aux contacts	Code
None	A
1NO	B
1NC	C
1NO–1NC	D
2NO	E
2NC	F
2NO–1NC	G
1NO–2NC	H
3NO	J
3NC	K
4NO	L[3]
4NC	M[3]
2NO–2NC	N3[3]
3NO–1NC	P[3]
1NO–3NC	R[3]

[3]Exceeds maximum number of contacts for some pilot light selections. See step 8 (digit 16) table, page 53.

Step 6 (digit 14) select monitoring options

Device	Code
None	A
Phase failure relay with undervoltage protection (panel mounted) — 190-480 V (PFR w/UV)	C[2]
Phase failure relay with undervoltage protection (panel mounted) — 575 V (PFR w/UV)	D[2]
Phase failure relay — 208 V (PFR)	E[4,6]
Phase failure relay — 240 V (PFR)	F[4,6]
Phase failure relay — 480 V (PFR)	G[4,6]
Phase failure relay — 575 V (PFR)	H[4,6]
Elapsed time meter (120 V/60 Hz) wired across coil (ETM)	1[2,5]
ETM + PFR w/UV (190–480 V)	L[2,5,6]
ETM + PFR w/UV (575 V)	N[2,5,6]
ETM + PFR (208 V)	P[2,4,5,6]
ETM + PFR (240 V)	Q[2,4,5,6]
ETM + PFR (480 V)	R[2,4,5,6]
ETM + PFR (575 V)	S[2,4,5,6]

[2]Requires oversized enclosure for NEMA sizes 0–2. Select proper NEMA size and enclosure type from step 1 (digits 1–7) table, page 50.
[4]Available for type 1 enclosure only.
[5]Requires 120 V control circuit voltage or CPT w/ 120 V secondary.
[6]Requires oversized enclosure for phase failure relay.

Step 7 (digit 15) select push button/selector switch

Push button/selector switch — heavy duty	Code
None	A
Start/stop push button	J
H and-off-auto (HOA) selector switch	L
Off-on selector switch	M
HOA SS and start push button	S
Keyed HOA SS, key removal center pos.	N

CR407 magnetic starters

Nonreversing, combination, thermal magnetic circuit breaker type

Part number configuration
Valid for NEMA sizes 0–4

—

Step 8 (digit 16) select pilot device

Pilot light (heavy duty) type	Color — functionality	Code
None		A
LED lights	Red — across coil	1
	Green — across coil	2
	Red — thru NO aux contact	3[7]
	Green — thru NC aux contact	4[7]
	Red — thru NO aux contact and green — thru NC aux contact	5[8]
	Red — across coil and green — thru NC aux contact	6[7]
	Red — across coil and green — thru NC aux contact and unwired amber	7[7]
Push-to-test lights	Red — across coil	R
	Green — across coil	S
	Red — thru NO aux contact	C[7]
	Green — thru NC aux contact	D[7]
	Red — thru NO aux contact and green — thru NC aux contact	E[8]
	Red — across coil and green — thru NC aux contact	V[7]
	Red — across coil and green — thru NC aux contact and unwired amber	Y[7]

[7]Maximum of 3 Aux contacts may be added to sizes 0 and 1.
[8]Maximum of 2 Aux contacts may be added to sizes 0 and 1. Maximum of 3 Aux contacts may be added to sizes 2–4.
Note: Auxiliary contacts wired as part of pilot light selection are in addition to the auxiliary contacts selected from step 5 (digit 13) table, page 52, which are for customer/ field connections.

—

Step 9 (digit 17) select control options

Device	Code
None	A
1 relay, 2NO-2NC, 24/120 V coil — unwired	B[2,9]
2 relays, 24/120 V coil — unwired	C[2,9]
DIN rail - for customer use	D[2]
12 point terminal strip — unwired (12 PT strip)	E[2]
Space heater w/ NC contact	H[2,10]
1 relay + 12 PT strip	J[2,9]
2 relays + 12 PT strip	K[2,9]
DIN rail + 12 PT strip + space heater	L[2,10]
2 relays + 12 PT strip + space heater	M[2,9,10]
Time delay on relay, 24/120 V coil — unwired (TD)	N[2,9]
Time delay off relay, 24/120 V coil — unwired (TD)	P[2,9]
12 PT strip + TD on	R[2,9]
12 PT strip + TD off	S[2,9]
12 PT strip + space heater + TD on	T[2,9,10]
12 PT strip + space heater + TD off	U[2,9,10]

[2]Requires oversized enclosure for NEMA sizes 0–2. Select proper NEMA size and enclosure type from step 1 (digits 1-7) table, page 50.
[9]Relay/timer coil voltage is equivalent to CPT secondary voltage. Requires minimum 100 extra VA CPT option.
[10]Maximum number of auxiliary contacts shall be reduced by 1.

General note:
On NEMA size 3 and 4 starters, if selecting factory installed and wired operator devices (push buttons, selector switches, and/or pilot lights) then control circuit fusing, a control power transformer, or 120 V separate sourced control is required when the protective device is rated greater than 100 amps.

CR387, CR487 mag-break magnetic starters

Nonreversing, combination, NEMA type 1, 3R, 12, 4/4X

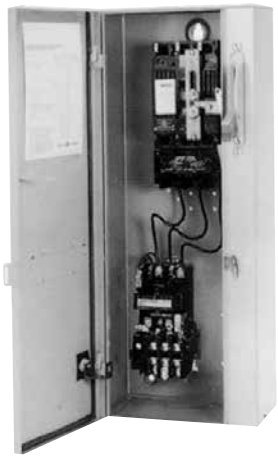

Typical CR387 starter with mag-break protector with current limiter

400 horsepower maximum
NEMA sizes 0–6
600 volts maximum 50/60 Hz

Application

The CR387/487 nonreversing starters are designed for more accurate fault protection for motor circuits by utilizing Tmax® XT motor circuit protectors. Refer to page 12 for features of basic starter.

Features

- Mechanism—always controls interrupting switch.
- Easy inspection, maintenance—performed from starter front.
- LED lights standard.
- Optional factory-installed control transformer.

Reference publications

Instructions	
NEMA size	**Publication number**
0,1	1SQC912007M0201
2	1SQC912002M0201
3	1SQC912010M0201
4	1SQC912011M0201
5	1SQC912121M0201
6	1SQC912122M0201

CR387, CR487 mag-break magnetic starters

Nonreversing, combination, NEMA type 1, 3R, 12, 4/4X

200 horsepower maximum
NEMA sizes 0–5, mag-break circuit breaker type
600 volts maximum 50/60 Hz

Standard features

Tmax® XT circuit breaker. Includes a holding interlock, pressure terminals for the line and load connections, plus a 3-leg block type ambient compensated overload relay with manual reset. All enclosures include external reset. NO/NC contacts on the overload relay are provided. LED lights standard.

CR387/487 mag-break circuit breaker type

Voltage (60 Hz)	NEMA size	Maximum horsepower	Continuous amp rating	CB rating (amps)	NEMA type 1 Product number CR	NEMA type 3R Product number CR	NEMA type 12 Product number CR	NEMA type 4/4X Product number CR
200-208	0	1	18	7	387BT08MB4AAAAA	487B608MB4AAAAA	487B208MB4AAAAA	487B408MB4AAAAA
200-208	0	3	18	15	387BT08MC4AAAAA	487B608MC4AAAAA	487B208MC4AAAAA	487B408MC4AAAAA
200-208	1	5	27	25	387CT08ME4AAAAA	487C608ME4AAAAA	487C208ME4AAAAA	487C408ME4AAAAA
200-208	1	7½	27	40	387CT08MG4AAAAA	487C608MG4AAAAA	487C208MG4AAAAA	487C408MG4AAAAA
200-208	2	10	45	50	387DT08MH4AAAAA	487D608MH4AAAAA	487D208MH4AAAAA	487D408MH4AAAAA
200-208	3	15	90	70	487E108MK4AAAAA	487E608MK4AAAAA	487E208MK4AAAAA	487E408MK4AAAAA
200-208	3	20	90	80	487E108ML4AAAAA	487E608ML4AAAAA	487E208ML4AAAAA	487E408ML4AAAAA
200-208	3	25	90	100	487E108MN4AAAAA	487E608MN4AAAAA	487E208MN4AAAAA	487E408MN4AAAAA
200-208	4	30	135	125	487F108MQ4AAAAA	487F608MQ4AAAAA	487F208MQ4AAAAA	487F408MQ4AAAAA
200-208	4	40	135	150	487F108MR4AAAAA	487F608MR4AAAAA	487F208MR4AAAAA	487F408MR4AAAAA
230-240	0	½	18	3	387BT03MA4AAAAA	487B603MA4AAAAA	487B203MA4AAAAA	487B403MA4AAAAA
230-240	0	1	18	7	387BT03MB4AAAAA	487B603MB4AAAAA	487B203MB4AAAAA	487B403MB4AAAAA
230-240	0	3	18	15	387BT03MC4AAAAA	487B603MC4AAAAA	487B203MC4AAAAA	487B403MC4AAAAA
230-240	1	5	27	25	387CT03ME4AAAAA	487C603ME4AAAAA	487C203ME4AAAAA	487C403ME4AAAAA
230-240	1	7½	27	30	387CT03MF4AAAAA	487C603MF4AAAAA	487C203MF4AAAAA	487C403MF4AAAAA
230-240	2	10	45	40	387DT03MG4AAAAA	487D603MG4AAAAA	487D203MG4AAAAA	487D403MG4AAAAA
230-240	2	15	45	60	387DT03MJ4AAAAA	487D603MJ4AAAAA	487D203MJ4AAAAA	487D403MJ4AAAAA
230-240	3	20	90	70	487E103MK4AAAAA	487E603MK4AAAAA	487E203MK4AAAAA	487E403MK4AAAAA
230-240	3	25	90	90	487E103MM4AAAAA	487E603MM4AAAAA	487E203MM4AAAAA	487E403MM4AAAAA
230-240	3	30	90	100	487E103MN4AAAAA	487E603MN4AAAAA	487E203MN4AAAAA	487E403MN4AAAAA
230-240	4	40	135	150	487F103MR4AAAAA	487F603MR4AAAAA	487F203MR4AAAAA	487F403MR4AAAAA
230-240	4	50	135	175	487F103MS4AAAAA	487F603MS4AAAAA	487F203MS4AAAAA	487F403MS4AAAAA
460-480	0	1	18	3	387BT04MA4AAAAA	487B604MA4AAAAA	487B204MA4AAAAA	487B404MA4AAAAA
460-480	0	3	18	7	387BT04MB4AAAAA	487B604MB4AAAAA	487B204MB4AAAAA	487B404MB4AAAAA
460-480	0	5	18	15	387BT04MC4AAAAA	487B604MC4AAAAA	487B204MC4AAAAA	487B404MC4AAAAA
460-480	1	7½	27	15	387CT04MC4AAAAA	487C604MC4AAAAA	487C204MC4AAAAA	487C404MC4AAAAA
460-480	1	10	27	20	387CT04MD4AAAAA	487C604MD4AAAAA	487C204MD4AAAAA	487C404MD4AAAAA
460-480	2	15	45	30	387DT04MF4AAAAA	487D604MF4AAAAA	487D204MF4AAAAA	487D404MF4AAAAA
460-480	2	20	45	40	387DT04MG4AAAAA	487D604MG4AAAAA	487D204MG4AAAAA	487D404MG4AAAAA
460-480	2	25	45	50	387DT04MH4AAAAA	487D604MH4AAAAA	487D204MH4AAAAA	487D404MH4AAAAA
460-480	3	30	90	50	487E104MH4AAAAA	487E604MH4AAAAA	487E204MH4AAAAA	487E404MH4AAAAA
460-480	3	40	90	70	487E104MK4AAAAA	487E604MK4AAAAA	487E204MK4AAAAA	487E404MK4AAAAA
460-480	3	50	90	90	487E104MM4AAAAA	487E604MM4AAAAA	487E204MM4AAAAA	487E404MM4AAAAA
460-480	4	60	135	100	487F104MN4AAAAA	487F604MN4AAAAA	487F204MN4AAAAA	487F404MN4AAAAA
460-480	4	75	135	125	487F104MQ4AAAAA	487F604MQ4AAAAA	487F204MQ4AAAAA	487F404MQ4AAAAA
460-480	4	100	135	175	487F104MS4AAAAA	487F604MS4AAAAA	487F204MS4AAAAA	487F404MS4AAAAA
575-600	0	1	18	3	387BT05MA4AAAAA	487B605MA4AAAAA	487B205MA4AAAAA	487B405MA4AAAAA
575-600	0	3	18	7	387BT05MB4AAAAA	487B605MB4AAAAA	487B205MB4AAAAA	487B405MB4AAAAA
575-600	0	5	18	15	387BT05MC4AAAAA	487B605MC4AAAAA	487B205MC4AAAAA	487B405MC4AAAAA

• Motor full load current should not exceed continuous ampere rating of starter.

CR387, CR487 mag-break magnetic starters

Nonreversing, combination, NEMA type 1, 3R, 12, 4/4X

200 horsepower maximum
NEMA sizes 0–5, mag-break circuit breaker type
600 volts maximum 50/60 Hz

Standard features
Tmax® XT circuit breaker. Includes a holding interlock, pressure terminals for the line and load connections, plus a 3-leg block type ambient compensated overload relay with manual reset. All enclosures include external reset. NO/NC contacts on the overload relay are provided. LED lights standard.

CR387/487 mag-break circuit breaker type (continued)

					NEMA type 1	NEMA type 3R	NEMA type 12	NEMA type 4/4X
Voltage (60 Hz)	NEMA size	Maximum horsepower	Continuous amp rating	CB rating (amps)	Product number CR	Product number CR	Product number CR	Product number CR
575-600	1	10	27	15	387CT05MC4AAAAA	487C605MC4AAAAA	487C205MC4AAAAA	487C405MC4AAAAA
575-600	2	15	45	25	387DT05ME4AAAAA	487D605ME4AAAAA	487D205ME4AAAAA	487D405ME4AAAAA
575-600	2	20	45	30	387DT05MF4AAAAA	487D605MF4AAAAA	487D205MF4AAAAA	487D405MF4AAAAA
575-600	2	25	45	40	387DT05MG4AAAAA	487D605MG4AAAAA	487D205MG4AAAAA	487D405MG4AAAAA
575-600	3	30	90	40	487E105MG4AAAAA	487E605MG4AAAAA	487E205MG4AAAAA	487E405MG4AAAAA
575-600	3	40	90	60	487E105MJ4AAAAA	487E605MJ4AAAAA	487E205MJ4AAAAA	487E405MJ4AAAAA
575-600	3	50	90	70	487E105MK4AAAAA	487E605MK4AAAAA	487E205MK4AAAAA	487E405MK4AAAAA
575-600	4	60	135	80	487F105ML4AAAAA	487F605ML4AAAAA	487F205ML4AAAAA	487F405ML4AAAAA
575-600	4	75	135	100	487F105MN4AAAAA	487F605MN4AAAAA	487F205MN4AAAAA	487F405MN4AAAAA
575-600	4	100	135	150	487F105MR4AAAAA	487F605MR4AAAAA	487F205MR4AAAAA	487F405MR4AAAAA

• Motor full load current should not exceed continuous ampere rating of starter.

CR387 mag-break magnetic starters

Nonreversing, combination, mag-break circuit breaker type

Part number configuration
Valid for NEMA sizes 0-2, type 1 standard enclosure

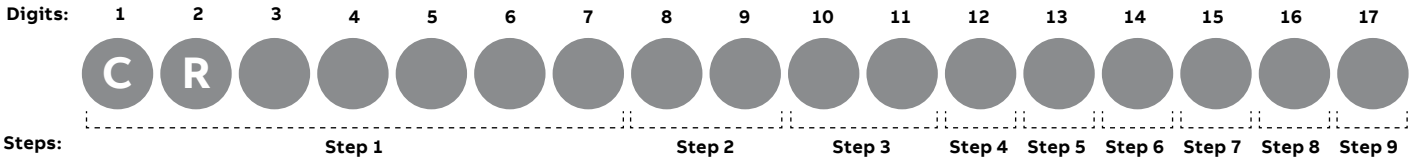

To configure the part number, use the tables below to fill in the digit boxes with the appropriate code.

Step 1 (digits 1-7) select NEMA size and enclosure

NEMA size	NEMA type 1 Standard enclosure CR
0	387BT
1	387CT
2	387DT

Note: All enclosures include external overload reset buttons.

Step 2 (digits 8, 9) select control voltage

Control circuit voltage and CPT	No CPT	Control fuses, no CPT	Standard size CPT	Standard size CPT + 100 VA
120 V w/ surge protector (SP)	01	F1	–	–
120 V	02	F2	–	–
240 V	03	F3	–	–
480 V	04	F4	–	–
600 V	05	F5	–	–
208 V	08	F8	–	–
24 V	09	–	–	–
240 V/120 V w/CPT	–	–	93	13
480 V/120 V w/CPT	–	–	94	14
600 V/120 V w/CPT	–	–	95	15
208 V/120 V w/CPT	–	–	98	18
240 V/120 V w/CPT and SP	–	–	33	53
480 V/120 V w/CPT and SP	–	–	34	54
600 V/120 V w/CPT and SP	–	–	35	55
208 V/120 V w/CPT and SP	–	–	38	58
240 V/24 V w/CPT	–	–	S3	A3
480 V/24 V w/CPT	–	–	S4	A4
600 V/24 V w/CPT	–	–	S5	A5
208 V/24 V w/CPT	–	–	S8	A8

Note: CPT includes 2 primary fuses and 1 secondary fuse.

CR387 mag-break magnetic starters

Nonreversing, combination, mag-break circuit breaker type

Part number configuration
Valid for NEMA sizes 0-2, type 1 standard enclosure

Step 3 (digits 10, 11) select protective device

Mag-break circuit breaker — Spectra™ series

	208 V			240 V			480 V			600 V		
NEMA size	Max Hp	CB rating (amps)	Code	Max Hp	CB rating (amps)	Code	Max Hp	CB rating (amps)	Code	Max Hp	CB rating (amps)	Code
0	0.5	3	MA	0.5	3	MA	1	3	MA	1	3	MA
	1	7	MB	–	–	–	–	–	–	–	–	–
	–	–	–	–	–	–	3	7	MB	3	7	MB
	3	15	MC	1	7	MB	–	–	–	–	–	–
	–	–	–	3	15	MC	5	15	MC	5	15	MC
1	5	25	ME	5	25	ME	7½	25	ME	10	25	ME
	–	–	–	–	–	–	10	25	ME	–	–	–
	7½	40	MG	7½	40	MG	–	–	–	–	–	–
2	–	–	–	–	–	–	15	40	MG	15	40	MG
	10	60	MJ	10	60	MJ	–	–	–	–	–	–
	–	–	–	–	–	–	–	–	–	–	–	–
	–	–	–	–	–	–	–	–	–	20	40	MG
	–	–	–	15	60	MJ	20	60	MJ	–	–	–
	–	–	–	–	–	–	25	60	MJ	25	60	MJ
3	–	–	–	–	–	–	30	60	MJ	30	60	MJ
	15	100	MN	20	100	MN	–	–	–	–	–	–
	–	–	–	–	–	–	–	–	–	40	60	MJ
	20	100	MN	25	100	MN	40	100	MN	–	–	–
	25	100	MN	30	100	MN	50	100	MN	50	100	MN
4	30	150	MR	–	–	–	60	100	MN	60	100	MN
	–	–	–	40	175	MS	–	–	–	–	–	–
	–	–	–	–	–	–	75	150	MR	75	150	MR
	–	–	–	–	–	–	–	–	–	100	150	MR
	40	175	MS	50	175	MS	100	175	MS	–	–	–

Step 4 (digit 12) select overload relay

Overload relay	Code
Thermal bi-metallic ambient compensated (1NC)	3
Thermal bi-metallic ambient compensated (1NO–1NC)	4
Solid state overload (1NO–1NC)	(#)

(#) Select code for solid state overload amp rating from standard or optional ranges table below.

Solid state overload relay — standard range

		200–208 V		230–240 V		460–480 V		575–600 V	
NEMA size	OL range	Max Hp	Code	Max Hp	Code	Max Hp	Code	Max Hp	Code
0	0.8–1.7	–	–	–	–	¾	D	1	D
	1.6–3.4	½	E	¾	E	2	E	2	E
	3.2–6.8	1	F	2	F	3	F	5	F
	6.5–13.5	3	G	3	G	5	G	–	–
1	6.5–13.5	–	–	–	–	7½	G	10	G
	13–27	7½	H	7½	H	10	H	–	–
2	13–27	–	–	–		20	H	25	H
	25–50	10	J	15	J	25	J	–	–

Optional ranges

	NEMA size	
OL amp range	0 and 1	2
0.4–0.85	C	–
0.8–1.7	D	–
1.6–3.4	E	–
3.2–6.8	F	–
6.5–13.5	G	G
13–27	H	H
25–50	–	J
17–35	–	–
35–70	–	–
65–135	–	–

CR387 mag-break magnetic starters

Nonreversing, combination, mag-break circuit breaker type

Part number configuration
Valid for NEMA sizes 0-2, type 1 standard enclosure

Step 5 (digit 13) select auxiliary contacts

Aux contacts	Code
None	A
1NO	B
1NC	C
1NO–1NC	D
2NO	E
2NC	F
2NO–1NC	G
1NO–2NC	H
3NO	J
3NC	K
4NO	L[1]
4NC	M[1]
2NO–2NC	N[1]
3NO–1NC	P[1]
1NO–3NC	R[1]

[1]Exceeds maximum number of contacts for some pilot light selections. See step 8 (digit 16) table, page 59.

Step 6 (digit 14) select monitoring options

Device	Code
None[2]	A

[2]Phase failure relay is not available for CR387 series standard enclosures. If this is required for your application, use CR487 series oversized enclosure. See page 60.

Step 7 (digit 15) select push button/ selector switch

Push button/selector switch - heavy duty	Code
None	A
Start/stop push button	J
H and-off-auto (HOA) selector switch	L
Off-on selector switch	M
HOA SS and start push button	S
Keyed HOA SS, key removal center pos.	N

Step 8 (digit 16) select pilot device

Pilot light (heavy duty) type	Color — functionality	Code
None		A
LED lights	Red — across coil	1
	Green — across coil	2
	Red — thru NO aux contact	3[3]
	Green — thru NC aux contact	4[3]
	Red — thru NO aux contact and green — thru NC aux contact	5[4]
	Red — across coil and green — thru NC aux contact	6[3]
	Red — across coil and green — thru NC aux contact and unwired amber	7[3]
Push-to-test lights	Red — across coil	R
	Green — across coil	S
	Red — thru NO aux contact	C[3]
	Green — thru NC aux contact	D[3]
	Red — thru NO aux contact and green — thru NC aux contact	E[4]
	Red — across coil and green — thru NC aux contact	V[3]
	Red — across coil and green — thru NC aux contact and unwired amber	Y[3]

[3]Maximum of 3 Aux contacts may be added to sizes 0 and 1.
[4]Maximum of 2 Aux contacts may be added to sizes 0 and 1. Maximum of 3 Aux contacts may be added to sizes 2–4.
Note: Auxiliary contacts wired as part of pilot light selection are in addition to the auxiliary contacts selected from step 5 (digit 13) table, page 58, which are for customer/ field connections.

Step 9 (digit 17) select control options

Device	Code
None	A

General note:
If selecting factory installed and wired operator devices (push buttons, selector switches, and/or pilot lights) control circuit fusing, a control power transformer, or 24 V/120 V separate sourced control is required, regardless of protective device rating.

CR487 mag-break magnetic starters

Nonreversing, combination, mag-break circuit breaker type

Part number configuration
Valid for NEMA sizes 0–4

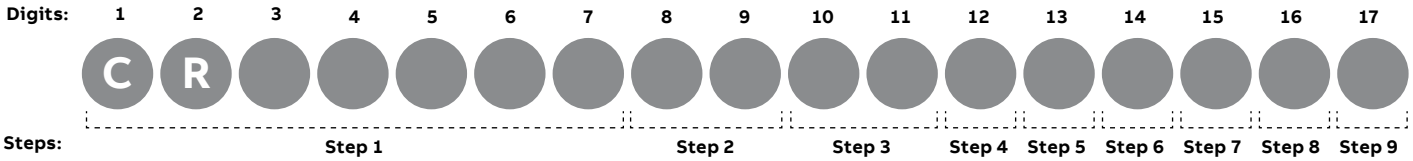

To configure the part number, use the tables below to fill in the digit boxes with the appropriate code.

Step 1 (digits 1-7) select NEMA size and enclosure

	NEMA type 1		NEMA type 3R		NEMA type 12		NEMA type 4/4X	
NEMA size	Standard enclosure CR	Oversized enclosure CR	Standard enclosure CR	Oversized enclosure CR	Standard enclosure CR	Oversized enclosure CR	Standard enclosure CR	Oversized enclosure CR
0	Use CR387	487B5	487B6	487BR	487B2	487B7	487B4	487BS
1	Use CR387	487C5	487C6	487CR	487C2	487C7	487C4	487CS
2	Use CR387	487D5	487D6	487DR	487D2	487D7	487D4	487DS
3	487E1	487E5	487E6	487ER	487E2	487E7	487E4	487ES
4	487F1	487F5	487F6	487FR	487F2	487F7	487F4	487FS

Note: All enclosures include external overload reset buttons. NEMA 4 enclosures are stainless steel.

Step 2 (digits 8, 9) select control voltage (no CPT and standard size CPT)

Control circuit voltage and CPT	No CPT	Control fuses, no CPT	Standard size CPT
120 V w/ surge protector (SP)	01	F1	–
120 V	02	F2	–
240 V	03	F3	–
480 V	04	F4	–
600 V	05	F5	–
208 V	08	F8	–
24 V[1]	09	–	–
240 V/120 V w/CPT	–	–	93
480 V/120 V w/CPT	–	–	94
600 V/120 V w/CPT	–	–	95
208 V/120 V w/CPT	–	–	98
240 V/120 V w/CPT and SP	–	–	33
480 V/120 V w/CPT and SP	–	–	34
600 V/120 V w/CPT and SP	–	–	35
208 V/120 V w/CPT and SP	–	–	38
240 V/24 V w/CPT[1]	–	–	S3
480 V/24 V w/CPT[1]	–	–	S4
600 V/24 V w/CPT[1]	–	–	S5
208 V/24 V w/CPT[1]	–	–	S8

[1]24 V coils not available for NEMA size 3 and 4.

Step 2 (digits 8, 9) select control voltage (extra capacity CPT + 100 VA and 200 VA)

Control circuit voltage and CPT	Standard size CPT + 100 VA	Standard size CPT + 200 VA
120 V w/ surge protector (SP)	–	–
120 V	–	–
240 V	–	–
480 V	–	–
600 V	–	–
208 V	–	–
24 V[1]	–	–
240 V/120 V w/CPT	13	23
480 V/120 V w/CPT	14	24
600 V/120 V w/CPT	15	25
208 V/120 V w/CPT	18	28
240 V/120 V w/CPT and SP	53	63
480 V/120 V w/CPT and SP	54	64
600 V/120 V w/CPT and SP	55	65
208 V/120 V w/CPT and SP	58	68
240 V/24 V w/CPT[1]	A3	B3
480 V/24 V w/CPT[1]	A4	B4
600 V/24 V w/CPT[1]	A5	B5
208 V/24 V w/CPT[1]	A8	B8

Note: CPT includes 2 primary fuses and 1 secondary fuse.
[1]24 V coils not available for NEMA size 3 and 4.
[2]Requires oversized enclosure for NEMA sizes 0-2. Select proper NEMA size and enclosure type from step 1 (digits 1-7) table, above.

CR487 mag-break magnetic starters

Nonreversing, combination, mag-break circuit breaker type

Part number configuration
Valid for NEMA sizes 0–4

Step 3 (digits 10, 11) select protective device

Mag-break circuit breaker - Spectra™ series

	208 V			240 V			480 V			600 V		
NEMA size	Max Hp	CB rating (amps)	Code	Max Hp	CB rating (amps)	Code	Max Hp	CB rating (amps)	Code	Max Hp	CB rating (amps)	Code
0	0.5	3	MA	0.5	3	MA	1	3	MA	1	3	MA
	1	7	MB	–	–	–	–	–	–	–	–	–
	–	–	–	–	–	–	3	7	MB	3	7	MB
	3	15	MC	1	7	MB	–	–	–	–	–	–
	–	–	–	3	15	MC	5	15	MC	5	15	MC
1	5	25	ME	5	25	ME	7½	25	ME	10	25	ME
	–	–	–	–	–	–	10	25	ME	–	–	–
	7½	40	MG	7½	40	MG	–	–	–	–	–	–
2	–	–	–	–	–	–	15	40	MG	15	40	MG
	10	60	MJ	10	60	MJ	–	–	–	–	–	–
	–	–	–	–	–	–	–	–	–	–	–	–
	–	–	–	–	–	–	–	–	–	20	40	MG
	–	–	–	15	60	MJ	20	60	MJ	–	–	–
	–	–	–	–	–	–	25	60	MJ	25	60	MJ
3	–	–	–	–	–	–	30	60	MJ	30	60	MJ
	15	100	MN	20	100	MN	–	–	–	–	–	–
	–	–	–	–	–	–	–	–	–	40	60	MJ
	20	100	MN	25	100	MN	40	100	MN	–	–	–
	25	100	MN	30	100	MN	50	100	MN	50	100	MN
4	30	150	MR	–	–	–	60	100	MN	60	100	MN
	–	–	–	40	175	MS	–	–	–	–	–	–
	–	–	–	–	–	–	75	150	MR	75	150	MR
	–	–	–	–	–	–	–	–	–	100	150	MR
	40	175	MS	50	175	MS	100	175	MS	–	–	–

Step 4 (digit 12) select overload relay

Overload relay	Code
Thermal bi-metallic ambient compensated (1NC)	3
Thermal bi-metallic ambient compensated (1NO–1NC)	4
Solid state overload (1NO–1NC)	(#)

(#) Select code for solid state overload amp rating from standard or optional ranges table on page 62.

CR487 mag-break magnetic starters

Nonreversing, combination, mag-break circuit breaker type

Part number configuration
Valid for NEMA sizes 0–4

Step 4 (digit 12) select overload relay (continued)

Solid state overload relay — standard range

		200–208 V		230–240 V		460–480 V		575–600 V	
NEMA size	OL range	Max Hp	Code	Max Hp	Code	Max Hp	Code	Max Hp	Code
0	0.8 - 1.7	–	–	–	–	¾	D	1	D
	1.6 - 3.4	½	E	¾	E	2	E	2	E
	3.2 - 6.8	1	F	2	F	3	F	5	F
	6.5 - 13.5	3	G	3	G	5	G	–	–
1	6.5 - 13.5	–	–	–	–	7½	G	10	G
	13 - 27	7½	H	7½	H	10	H	–	–
2	13 - 27	–	–	–	–	20	H	25	H
	25 - 50	10	J	15	J	25	J	–	–
3	17 - 35	–	–	–	–	–	–	30	K
	35 - 70	20	L	25	L	50	L	50	L
	65 - 135	25	M	30	M	–	–	–	–
4	65 - 135	40	M	50	M	100	M	100	M

Optional ranges

	NEMA size		
OL amp range	0 and 1	2	3 and 4
0.4–0.85	C	–	–
0.8–1.7	D	–	–
1.6–3.4	E	–	–
3.2–6.8	F	–	–
6.5–13.5	G	G	–
13–27	H	H	–
25–50	–	J	–
17–35	–	–	K
35–70	–	–	L
65–135	–	–	M

Step 5 (digit 13) select auxiliary contacts

Aux contacts	Code
None	A
1NO	B
1NC	C
1NO–1NC	D
2NO	E
2NC	F
2NO–1NC	G
1NO–2NC	H
3NO	J
3NC	K
4NO	L[3]
4NC	M[3]
2NO–2NC	N[3]
3NO–1NC	P[3]
1NO–3NC	R[3]

[3]Exceeds maximum number of contacts for some pilot light selections. See step 8 (digit 16) table, page 63.

Step 6 (digit 14) select monitoring options

Device	Code
None	A
Phase failure relay with undervoltage protection (panel mounted) — 190-480V (PFR w/UV)	C[2]
Phase failure relay with undervoltage protection (panel mounted) — 575V (PFR w/UV)	D[2]
Phase failure relay — 208 V (PFR)	E[4,6]
Phase failure relay — 240 V (PFR)	F[4,6]
Phase failure relay — 480 V (PFR)	G[4,6]
Phase failure relay — 575 V (PFR)	H[4,6]
Elapsed time meter (120 V/60 Hz) wired across coil (ETM)	1[2,5]
ETM + PFR w/UV (190–480 V)	L[2,5,6]
ETM + PFR w/UV (575 V)	N[2,5,6]
ETM + PFR (208 V)	P[2,4,5,6]
ETM + PFR (240 V)	Q[2,4,5,6]
ETM + PFR (480 V)	R[2,4,5,6]
ETM + PFR (575 V)	S[2,4,5,6]

[2]Requires oversized enclosure for NEMA sizes 0-2. Select proper NEMA size and enclosure type from step 1 (digits 1-7) table, page 60.
[4]Available for type 1 enclosure only.
[5]Requires 120 V control circuit voltage or CPT w/ 120 V secondary.
[6]Requires oversized enclosure for phase failure relay.

CR487 mag-break magnetic starters

Nonreversing, combination, mag-break circuit breaker type

Part number configuration
Valid for NEMA sizes 0–4

Step 7 (digit 15) select push button/selector switch

Push button/selector switch — heavy duty	Code
None	A
Start/stop push button	J
H and-off-auto (HOA) selector switch	L
Off-on selector switch	M
HOA SS and start push button	S
Keyed HOA SS, key removal center pos.	N

Step 8 (digit 16) select pilot device

Pilot light (heavy duty) type	Color — functionality	Code
None		A
LED lights	Red–across coil	1
	Green–across coil	2
	Red–thru NO aux contact	3[7]
	Green–thru NC aux contact	4[7]
	Red–thru NO aux contact and green–thru NC aux contact	5[8]
	Red–across coil and green–thru NC aux contact	6[7]
	Red–across coil and green–thru NC aux contact and unwired amber	7[7]
Push-to-test lights	Red–across coil	R
	Green–across coil	S
	Red–thru NO aux contact	C[7]
	Green–thru NC aux contact	D[7]
	Red–thru NO aux contact and green–thru NC aux contact	E[8]
	Red–across coil and green–thru NC aux contact	V[7]
	Red–across coil and green–thru NC aux contact and unwired amber	Y[7]

[7]Maximum of 3 Aux contacts may be added to sizes 0 and 1.
[8]Maximum of 2 Aux contacts may be added to sizes 0 and 1. Maximum of 3 Aux contacts may be added to sizes 2-4.
Note: Auxiliary contacts wired as part of pilot light selection are in addition to the auxiliary contacts selected from step 5 (digit 13) table, page 62, which are for customer/field connections.

Step 9 (digit 17) select control options

Device	Code
None	A
1 relay, 2NO-2NC, 24/120 V coil - unwired	B[2,9]
2 relays, 24/120 V coil - unwired	C[2,9]
DIN rail - for customer use	D[2]
12 point terminal strip - unwired (12 PT strip)	E[2]
Space heater w/ NC contact	H[2,10]
1 relay + 12 PT strip	J[2,9]
2 relays + 12 PT strip	K[2,9]
DIN rail + 12 PT strip + space heater	L[2,10]
2 relays + 12 PT strip + space heater	M[2,9,10]
Time delay on relay, 24/120 V coil - unwired (TD)	N[2,9]
Time delay off relay, 24/120 V coil - unwired (TD)	P[2,9]
12 PT strip + TD on	R[2,9]
12 PT strip + TD off	S[2,9]
12 PT strip + space heater + TD on	T[2,9,10]
12 PT strip + space heater + TD off	U[2,9,10]

[2]Requires oversized enclosure for NEMA sizes 0-2. Select proper NEMA size and enclosure type from step 1 (digits 1-7) table, page 60.
[9]Relay/timer coil voltage is equivalent to CPT secondary voltage. Requires minimum 100 extra VA CPT option.
[10]Maximum number of auxiliary contacts shall be reduced by 1.

General note:
If selecting factory installed and wired operator devices (Push Buttons, Selector Switches, and/or Pilot Lights) control circuit fusing, a control power transformer, or 24 V/120 V separate sourced control is required, regardless of protective device rating.

CR307, CR308, CR387 magnetic starters

Nonreversing, combination, NEMA type 1, 3R, 12, 4/4X

400 horsepower maximum
NEMA sizes 0-2
600 volts maximum 50/60 Hz

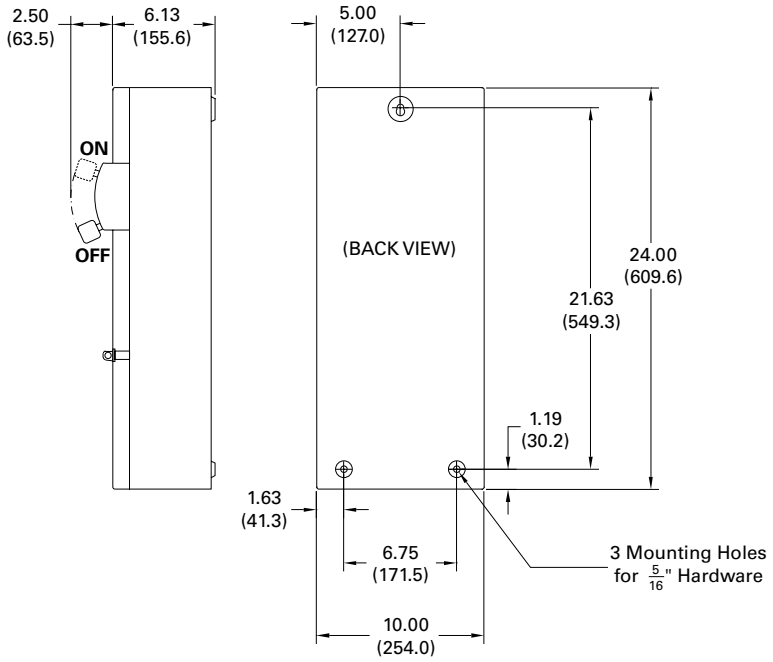

CR307, CR387, CR308 (excludes 100 A, 600 V fuse clips); type 1, standard size enclosure

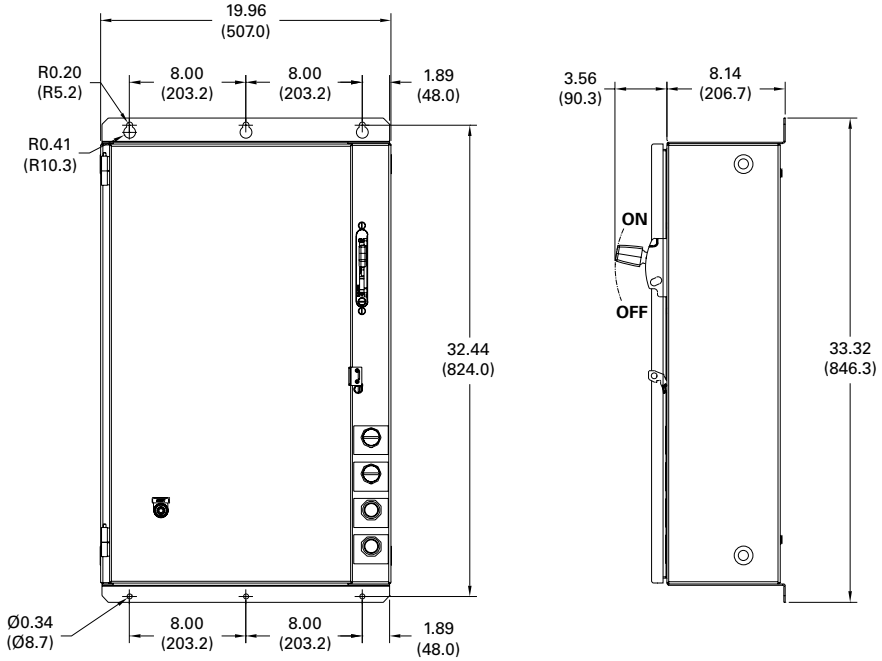

CR308 (includes 100 A, 600 V fuse clips); type 1, standard size enclosure

Outlines, dimensions (in. / mm) and weights (for estimating only)

CR307, CR308, CR387 magnetic starters

Nonreversing, combination, NEMA type 1/3R/12 and type 4X

400 horsepower maximum
NEMA sizes 5-6
600 volts maximum 50/60 Hz

CR307, CR308, CR387 NEMA type 1/3R/12 NEMA size 5

Dimension A	Dimension B	Dimension C	Dimension D	Dimension E	Dimension F
52.75 (1339.9)	30.00 (762.0)	11.19 (284.3)	51.63 (1311.3)	E1 - 16.00 (406.4) E2 - 24.00 (609.6)	48.59 (1234.2)

CR307, CR308, CR387 NEMA type 4X NEMA size 5

Dimension A	Dimension B	Dimension C	Dimension D	Dimension E	Dimension F
52.79 (1340.9)	30.00 (762.0)	11.15 (283.3)	51.63 (1311.3)	E1 - 16.00 (406.4) E2 - 24.00 (609.6)	48.61 (1234.7)

CR307, CR308, CR387 NEMA type 1/3R/12 NEMA size 6

Dimension A	Dimension B	Dimension C	Dimension D	Dimension E	Dimension F
84.09 (2135.9)	35.80 (909.3)	20.41 (518.5)	77.25 (1962.2)	35.30 (896.6)	75.84 (1926.3)

CR307, CR308, CR387 NEMA type 4X NEMA size 6

Dimension A	Dimension B	Dimension C	Dimension D	Dimension E	Dimension F
52.79 (1340.9)	30.00 (762.0)	11.15 (283.3)	51.63 (1311.3)	E1 - 16.00 (406.4) E2 - 24.00 (609.6)	48.61 (1234.7)

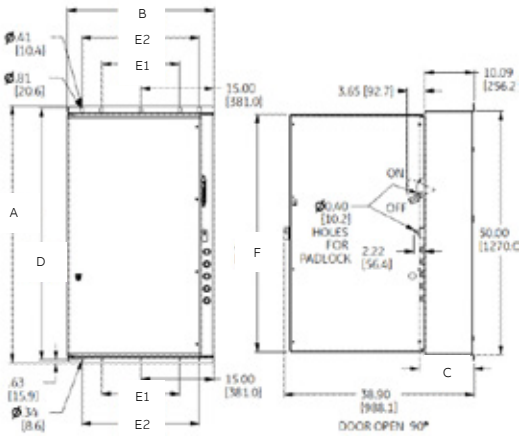

CR307, CR308, CR387 NEMA type 1/3R/12, type 4X NEMA size 5

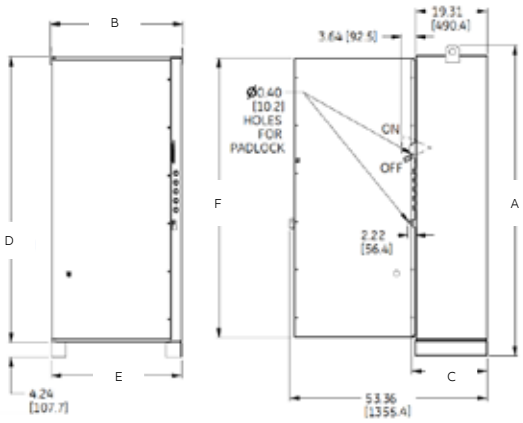

CR307, CR308, CR387 NEMA type 1/3R/12, type 4X NEMA size 6

Outlines, dimensions (in. / mm) and weights (for estimating only)

CR307, CR308, CR387 magnetic starters

Nonreversing, combination, NEMA type 3R

400 horsepower maximum
NEMA sizes 5-6
600 volts maximum 50/60 Hz

CR307, CR308, CR387 NEMA type 3R NEMA size 5

Dimension A	Dimension B	Dimension C	Dimension D	Dimension E	Dimension F
54.22 (1377.2)	30.51 (774.9)	11.194 (284.33)	52.11 (1323.7)	22.41 (569.1)	51.07 (1297.2)

CR307, CR308, CR387 NEMA type 1/3R/12 NEMA size 6

Dimension A	Dimension B	Dimension C	Dimension D	Dimension E	Dimension F
84.09 (2135.9)	35.80 (909.3)	20.41 (518.5)	77.25 (1962.2)	35.30 (896.6)	75.84 (1926.3)

CR307, CR308, CR387 NEMA type 4X NEMA size 6

Dimension A	Dimension B	Dimension C	Dimension D	Dimension E	Dimension F
52.79 (1340.9)	30.00 (762.0)	11.15 (283.3)	51.63 (1311.3)	E1 - 16.00 (406.4) E2 - 24.00 (609.6)	48.61 (1234.7)

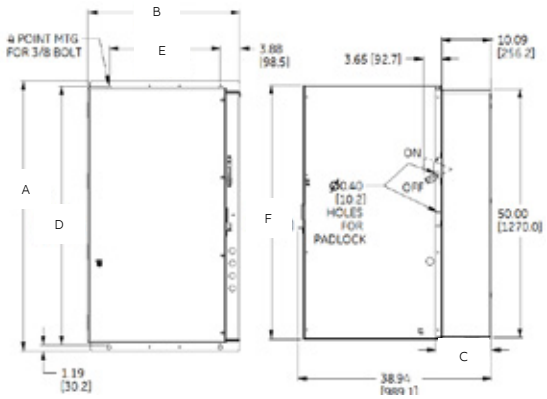

CR307, CR308, CR387 NEMA type 3R NEMA size 5

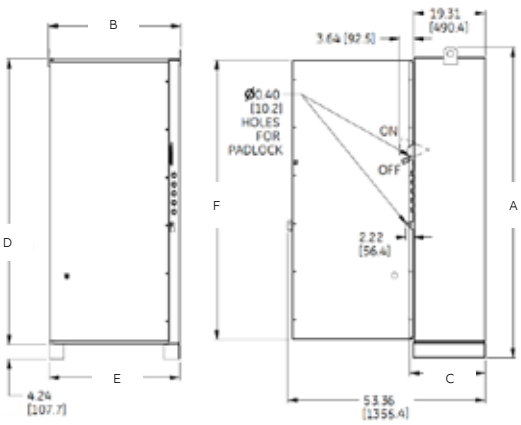

CR307, CR308, CR387 NEMA type 1/3R/12, type 4X NEMA size 6

Outlines, dimensions (in. / mm) and weights (for estimating only)

CR407, CR408, CR487 magnetic starters

Nonreversing, combination, NEMA type 1, 3R, 12, 4/4X

400 horsepower maximum
NEMA sizes 0-4
600 volts maximum 50/60 Hz

CR407, CR408 (nonfusible disconnect), CR487 NEMA type 1 enclosure
Standard size (enclosure code = 1)

NEMA size	A	B	C	D	E	F	G	H (dia)	J (dia)	K (dia)
0-2	See CR307, C308, CR387 dimensional information									
3-4	19.78 (502.4)	33.32 (846.3)	8.14 (206.7)	3.56 (90.4)	1.89 (48.0)	8.00 (203.2)	32.44 (824.0)	0.34 (8.7)	0.41 (10.3)	0.81 (20.6)

CR407, CR408 (nonfusible disconnect), CR487 NEMA type 1 enclosure
Oversized (enclosure code = 5)

NEMA size	A	B	C	D	E	F	G	H (dia)	J (dia)	K (dia)
0-2	19.78 (502.4)	33.32 (846.3)	8.14 (206.7)	3.56 (90.4)	1.89 (48.0)	8.00 (203.2)	32.44 (824.0)	0.34 (8.7)	0.41 (10.3)	0.81 (20.6)
3-4	23.00 (584.2)	53.82 (1367)	8.14 (206.7)	3.73 (94.6)	3.39 (86.1)	8.00 (203.2)	52.94 (1344.7)	0.34 (8.7)	0.41 (10.3)	0.81 (20.6)

CR407, CR408 (nonfusible disconnect), CR487 NEMA type 3R/12 enclosure
Standard size (enclosure code = 6 or 2)

NEMA size	A	B	C	D	E	F	G	H (dia)	J (dia)	K (dia)
0-2	11.00 279.4)	28.75 (730.3)	7.70 (195.5)	3.49 (88.6)	1.91 (48.5)	3.50 (88.9)	27.63 (701.7)	0.34 (8.7)	0.41 (10.3)	0.81 (20.6)
3-4	20.00 (508.0)	33.25 (844.6)	8.20 (208.2)	3.48 (88.5)	1.91 (48.5)	8.00 (203.2)	32.13 (816.0)	0.34 (8.7)	0.41 (10.3)	0.81 (20.6)

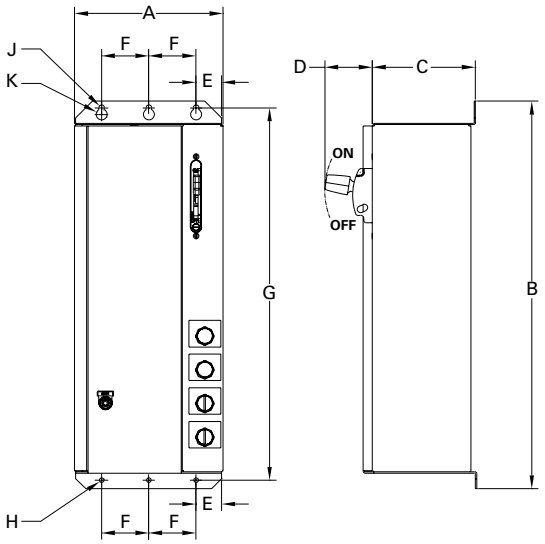

Outlines, dimensions (in. / mm) and weights (for estimating only)

CR407, CR408, CR487 magnetic starters

Nonreversing, combination, NEMA type 1, 3R, 12, 4/4X

400 horsepower maximum
NEMA sizes 0-4
600 volts maximum 50/60 Hz

CR407, CR408 (nonfusible disconnect), CR487 NEMA type 3R/12 enclosure
Oversized (enclosure code = R or 7)

NEMA size	A	B	C	D	E	F	G	H (dia)	J (dia)	K (dia)
0-2	20.00 (508.0)	33.25 (844.6)	8.20 (208.2)	3.48 (88.5)	1.91 (48.5)	8.00 (203.2)	32.13 (816.0)	0.34 (8.7)	0.41 (10.3)	0.81 (20.6)
3-4	23.00 (584.2)	53.82 (1367.0)	8.20 (208.2)	3.50 (88.8)	3.41 (86.6)	8.00 (203.2)	52.70 (1338.5)	0.34 (8.7)	0.41 (10.3)	0.81 (20.6)

CR407, CR408 (nonfusible disconnect), CR487 NEMA type 4/4X enclosure
Standard size (enclosure code = 4)

NEMA size	A	B	C	D	E	F	G	H (dia)	J (dia)	K (dia)
0-2	11.00 (279.4)	29.38 (746.3)	7.64 (194.0)	3.53 (89.7)	1.91 (48.5)	3.50 (88.9)	28.26 (717.7)	0.34 (8.7)	0.41 (10.3)	0.81 (20.6)
3-4	20.00 (508.0)	33.32 (846.3)	8.14 (206.7)	3.72 (94.6)	1.91 (48.5)	8.00 (203.2)	32.20 (817.8)	0.34 (8.7)	0.41 (10.3)	0.81 (20.6)

CR407, CR408 (nonfusible disconnect), CR487 NEMA type 4/4X enclosure
Oversized (enclosure code = S)

NEMA size	A	B	C	D	E	F	G	H (dia)	J (dia)	K (dia)
0-2	20.00 (508.0)	33.32 (846.3)	8.14 (206.7)	3.72 (94.6)	1.91 (48.5)	8.00 (203.2)	32.20 (817.8)	0.34 (8.7)	0.41 (10.3)	0.81 (20.6)
3-4	23.00 (584.2)	53.76 (1365.5)	8.14 (206.7)	3.55 (90.2)	3.41 (86.6)	8.00 (203.2)	52.64 (1336.9)	0.34 (8.7)	0.41 (10.3)	0.81 (20.6)

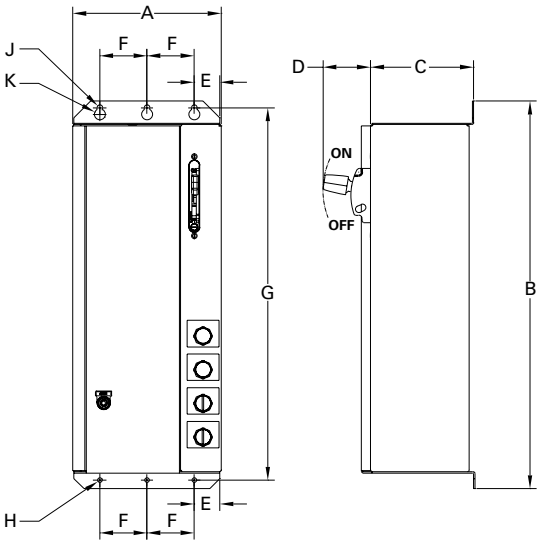

Outlines, dimensions (in. / mm) and weights (for estimating only)

CR408 magnetic starters

Nonreversing, combination, NEMA type 1, 3R, 12, 4/4X

400 horsepower maximum
NEMA sizes 0-4
600 volts maximum 50/60 Hz

CR408 (nonfusible disconnect) NEMA type 1 enclosure
Standard size (enclosure code = 1)

NEMA size	A	B	C	D	E	F	G	H (dia)	J (dia)	K (dia)
0-2									See CR308 dimensional information	
3 (excludes 200 A fuse clips)	19.78 (502.4)	33.32 (846.3)	8.14 (206.7)	3.56 (90.4)	1.89 (48.0)	8.00 (203.2)	32.44 (824.0)	0.34 (8.7)	0.41 (10.3)	0.81 (20.6)
3 (includes 200 A fuse clips)-4	23.00 (584.2)	53.82 (1367)	8.14 (206.7)	3.73 (94.6)	3.39 (86.1)	8.00 (203.2)	52.94 (1344.7)	0.34 (8.7)	0.41 (10.3)	0.81 (20.6)

CR408 (nonfusible disconnect) NEMA type 1 enclosure
Oversized (enclosure code = 5)

NEMA size	A	B	C	D	E	F	G	H (dia)	J (dia)	K (dia)
0-2	19.78 (502.4)	33.32 (846.3)	8.14 (206.7)	3.56 (90.4)	1.89 (48.0)	8.00 (203.2)	32.44 (824.0)	0.34 (8.7)	0.41 (10.3)	0.81 (20.6)
3 (excludes 200 A fuse clips)	23.00 (584.2)	53.82 (1367)	8.14 (206.7)	3.73 (94.6)	3.39 (86.1)	8.00 (203.2)	52.94 (1344.7)	0.34 (8.7)	0.41 (10.3)	0.81 (20.6)

CR408 (fusible disconnect) NEMA type 3R/12 enclosure
Standard size (enclosure code = 6 or 2)

NEMA size	A	B	C	D	E	F	G	H (dia)	J (dia)	K (dia)
0-2	11.00 (279.4)	28.75 (730.3)	7.70 (195.5)	3.49 (88.6)	1.91 (48.5)	3.50 (88.9)	27.63 (701.7)	0.34 (8.7)	0.41 (10.3)	0.81 (20.6)
3 (excludes 200 A fuse clips)	20.00 (508.0)	33.25 (844.6)	8.20 (208.2)	3.48 (88.5)	1.91 (48.5)	8.00 (203.2)	32.13 (816.0)	0.34 (8.7)	0.41 (10.3)	0.81 (20.6)
3 (includes 200 A fuse clips)-4	23.00 (584.2)	53.82 (1367.0)	8.20 (208.2)	3.50 (88.8)	3.41 (86.6)	8.00 (203.2)	52.70 (1338.5)	0.34 (8.7)	0.41 (10.3)	0.81 (20.6)

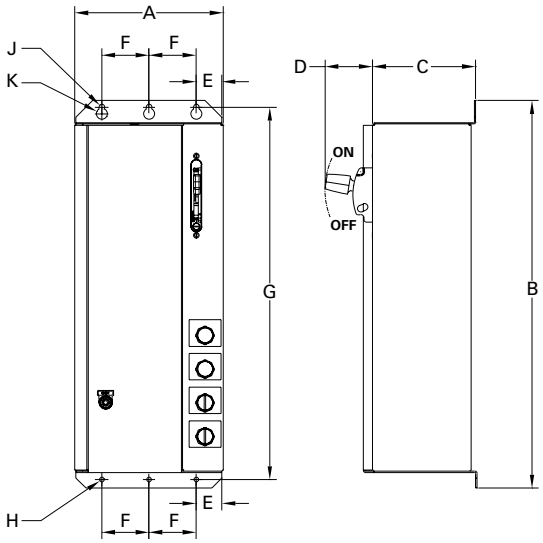

Outlines, dimensions (in. / mm) and weights (for estimating only)

CR408 magnetic starters

Nonreversing, combination, NEMA type 1, 3R, 12, 4/4X

400 horsepower maximum
NEMA sizes 0-4
600 volts maximum 50/60 Hz

CR408 (fusible disconnect) NEMA type 3R/12 enclosure
Oversized (enclosure code = R or 7)

NEMA size	A	B	C	D	E	F	G	H (dia)	J (dia)	K (dia)
0-2	20.00 (508.0)	33.25 (844.6)	8.20 (208.2)	3.48 (88.5)	1.91 (48.5)	8.00 (203.2)	32.13 (816.0)	0.34 (8.7)	0.41 (10.3)	0.81 (20.6)
3 (excludes 200 A fuse clips)	23.00 (584.2)	53.82 (1367.0)	8.20 (208.2)	3.50 (88.8)	3.41 (86.6)	8.00 (203.2)	52.70 (1338.5)	0.34 (8.7)	0.41 (10.3)	0.81 (20.6)

CR408 (fusible disconnect) NEMA type 4/4X enclosure
Standard size (enclosure code = 4)

NEMA size	A	B	C	D	E	F	G	H (dia)	J (dia)	K (dia)
0-2	11.00 (279.4)	29.38 (746.3)	7.64 (194.0)	3.53 (89.7)	1.91 (48.5)	3.50 (88.9)	28.26 (717.7)	0.34 (8.7)	0.41 (10.3)	0.81 (20.6)
3 (excludes 200A fuse clips)	20.00 (508.0)	33.32 (846.3)	8.14 (206.7)	3.72 (94.6)	1.91 (48.5)	8.00 (203.2)	32.20 (817.8)	0.34 (8.7)	0.41 (10.3)	0.81 (20.6)
3 (includes 200 A fuse clips)-4	23.00 (584.2)	53.76 (1365.5)	8.14 (206.7)	3.55 (90.2)	3.41 (86.6)	8.00 (203.2)	52.64 (1336.9)	0.34 (8.7)	0.41 (10.3)	0.81 (20.6)

CR408 (fusible disconnect) NEMA type 4/4X enclosure
Oversized (enclosure code = S)

NEMA size	A	B	C	D	E	F	G	H (dia)	J (dia)	K (dia)
0-2	20.00 (508.0)	33.32 (846.3)	8.14 (206.7)	3.72 (94.6)	1.91 (48.5)	8.00 (203.2)	32.20 (817.8)	0.34 (8.7)	0.41 (10.3)	0.81 (20.6)
3 (excludes 200 A fuse clips)	23.00 (584.2)	53.76 (1365.5)	8.14 (206.7)	3.55 (90.2)	3.41 (86.6)	8.00 (203.2)	52.64 (1336.9)	0.34 (8.7)	0.41 (10.3)	0.81 (20.6)

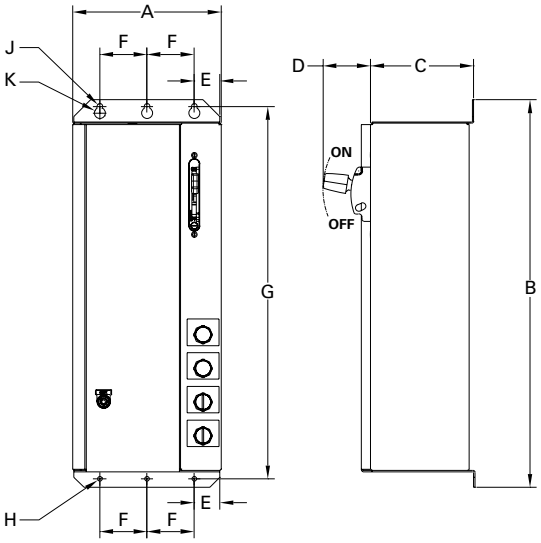

Outlines, dimensions (in. / mm) and weights (for estimating only)

CR411 magnetic starters

Reversing, combination, nonfusible and fusible disconnect type

Part number configuration
Valid for NEMA sizes 0-4

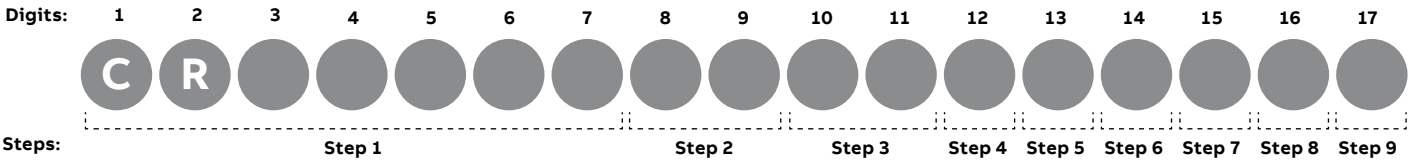

To configure the part number, use the tables below to fill in the digit boxes with the appropriate code.

Step 1 (digits 1-7) select NEMA size and enclosure

	NEMA type 1	NEMA type 3R	NEMA type 12	NEMA type 4
	Standard enclosure	Standard enclosure	Standard enclosure	Standard enclosure
NEMA size	CR	CR	CR	CR
0	411B1	411B6	411B2	411B4
1	411C1	411C6	411C2	411C4
2	411D1	411D6	411D2	411D4
3	411E1	411E6	411E2	411E4
4	411F1	411F6	411F2	411F4

Note: All enclosures include external overload reset buttons. NEMA 4 enclosures are stainless steel.

Step 2 (digits 8, 9) select control voltage (no CPT and standard size CPT)

Control circuit voltage and CPT	No CPT	Control fuses, no CPT	Standard size CPT
120 V w/ surge protector (SP)	01	F1	–
120 V	02	F2	–
240 V	03	F3	–
480 V	04	F4	–
600 V	05	F5	–
208 V	08	F8	–
24 V[1]	09	–	–
240 V/120 V w/CPT	–	–	93
480 V/120 V w/CPT	–	–	94
600 V/120 V w/CPT	–	–	95
208 V/120 V w/CPT	–	–	98
240 V/120 V w/CPT and SP	–	–	33
480 V/120 V w/CPT and SP	–	–	34
600 V/120 V w/CPT and SP	–	–	35
208 V/120 V w/CPT and SP	–	–	38
240 V/24 V w/CPT[1]	–	–	S3
480 V/24 V w/CPT[1]	–	–	S4
600 V/24 V w/CPT[1]	–	–	S5
208 V/24 V w/CPT[1]	–	–	S8

Note: CPT includes 2 primary fuses and 1 secondary fuse.
[1]24 V coils not available for NEMA size 3 and 4.

CR411 magnetic starters

Reversing, combination, nonfusible and fusible disconnect type

Part number configuration
Valid for NEMA sizes 0-4

Step 2 (digits 8, 9) select control voltage (extra capacity CPT + 100 VA and 200 VA)

Control circuit voltage and CPT	Standard size CPT + 100 VA	Standard size CPT + 200 VA
120 V w/ surge protector (SP)	–	–
120 V	–	–
240 V	–	–
480 V	–	–
600 V	–	–
208 V	–	–
24 V[1]	–	–
240 V/120 V w/CPT	13	23
480 V/120 V w/CPT	14	24
600 V/120 V w/CPT	15	25
208 V/120 V w/CPT	18	28
240 V/120 V w/CPT and SP	53	63
480 V/120 V w/CPT and SP	54	64
600 V/120 V w/CPT and SP	55	65
208 V/120 V w/CPT and SP	58	68
240 V/24 V w/CPT[1]	A3	B3
480 V/24 V w/CPT[1]	A4	B4
600 V/24 V w/CPT[1]	A5	B5
208 V/24 V w/CPT[1]	A8	B8

Note: CPT includes 2 primary fuses and 1 secondary fuse.
[1]24 V coils not available for NEMA size 3 and 4.

Step 3 (digits 10, 11) select protective device

Disconnect without fuse clips

NEMA size	Code
All	1A

Disconnect with class H fuse clips — for use with non-time delay/single element class H fuses

	200–208 V			230–240 V			460–480 V			575–600 V		
NEMA size	Max Hp	Fuse clip (amps)	Code	Max Hp	Fuse clip (amps)	Code	Max Hp	Fuse clip (amps)	Code	Max Hp	Fuse clip (amps)	Code
0	3	30	HA	3	30	HA	5	30	H3	5	30	H3
1	–	–	–	–	–	–	7½	30	H3	10	30	H3
	7½	60	HB	7½	60	HB	10	60	H6	–	60	H6
2	–	–	–	–	–	–	15	60	H6	20	60	H6
	10	100	HC	15	100	HC	25	100	H1	25	100	H1
3	–	–	–	–	–	–	30	100	H1	30	100	H1
	25	200	HD	30	200	HD	50	200	H2	50	200	H2
4	–	–	–	–	–	–	60	200	H2	60	200	H2
	40	400	HE	50	400	HE	100	400	H4	100	400	H4

CR411 magnetic starters

Reversing, combination, nonfusible and fusible disconnect type

Part number configuration
Valid for NEMA sizes 0-4

Step 3 (digits 10, 11) select protective device (continued)

Disconnect with class R fuse clips — for use with time delay/dual element class RK1/RK5 fuses

	200–208 V			230–240 V			460–480 V			575–600 V		
NEMA size	Max Hp	Fuse clip (amps)	Code	Max Hp	Fuse clip (amps)	Code	Max Hp	Fuse clip (amps)	Code	Max Hp	Fuse clip (amps)	Code
0	3	30	RA	3	30	RA	5	30	R3	5	30	R3
1	5	30	RA	5	30	RA	10	30	R3	10	30	R3
	7½	60	RB	7½	60	RB	–	–	–	–	–	–
2		–	–	–	–	–	–	30	R3	15	30	R3
	10	60	RB	15	60	RB	25	60	R6	25	60	R6
3	–	–	–	–	–	–	–	60	R6	30	60	R6
	20	100	RC	25	100	RC	50	100	R1	50	100	R1
	25	200	RD	30	200	RD	–	–	–	–	–	–
4	–	–	–	–	–	–	–	100	R1	60	100	R1
	400	200	RD	50	200	RD	100	200	R2	100	200	R2

Disconnect with class J fuse clips — for use with time delay/dual element class J fuses

	200–208 V			230–240 V			460–480 V			575–600 V		
NEMA size	Max Hp	Fuse clip (amps)	Code	Max Hp	Fuse clip (amps)	Code	Max Hp	Fuse clip (amps)	Code	Max Hp	Fuse clip (amps)	Code
0	3	30	J3	3	30	J3	5	30	J3	5	30	J3
1	5	30	J3	5	30	J3	10	30	J3	10	30	J3
	7½	60	J6	7½	60	J6	–	–	–	–	–	–
2	–	–	–	–	–	–	–	30	J3	15	30	J3
	10	60	J6	15	60	J6	25	60	J6	25	60	J6
3	–							60	J6	30	60	J6
	20	100	J1	25	100	J1	50	100	J1	50	100	J1
	25	200	J2	30	200	J2	–	–	–	–	–	–
4	–	–	–	–	–	–	–	100	J1	60	100	J1
	40	200	J2	50	200	J2	100	200	J2	100	200	J2

Step 4 (digit 12) select overload relay

Overload relay	Code
Thermal bi-metallic ambient compensated (1NC)	3
Thermal bi-metallic ambient compensated (1NO–1NC)	4
Solid state overload (1NO–1NC)	(#)

(#) Select code for solid state overload amp rating from standard or optional ranges table at right.

Solid state overload relay — standard range

		200–208 V		230–240 V		460–480 V		575–600 V	
NEMA size	OL range	Max Hp	Code	Max Hp	Code	Max Hp	Code	Max Hp	Code
0	0.8–1.7	–	–	–	–	¾	D	1	D
	1.6–3.4	½	E	¾	E	2	E	2	E
	3.2–6.8	1	F	2	F	3	F	5	F
	6.5–13.5	3	G	3	G	5	G	–	–
1	6.5–13.5	–	–	–	–	7½	G	10	G
	13–27	7½	H	7½	H	10	H	–	–
2	13–27	–	–	–	–	20	H	25	H
	25–50	10	J	15	J	25	J	–	–
3	17–35	–	–	–	–	–	–	30	K
	35–70	20	L	25	L	50	L	50	L
	65–135	25	M	30	M	–	–	–	–
4	65–135	40	M	50	M	100	M	100	M

Optional ranges

OL amp range	NEMA size 0 and 1	2	3 and 4
0.4–0.85	C	–	–
0.8–1.7	D	–	–
1.6–3.4	E	–	–
3.2–6.8	F	–	–
6.5–13.5	G	G	–
13–27	H	H	–
25–50	–	J	–
17–35	–	–	K
35–70	–	–	L
65–135	–	–	M

CR411 magnetic starters

Reversing, combination, nonfusible and fusible disconnect type

Part number configuration
Valid for NEMA sizes 0-4

Step 5 (digit 13) select auxiliary contacts

Aux contacts (per contactor)	Code
None	A
1NO	B
1NC	C
1NO–1NC	D
2NO	E
2NC	F

Step 6 (digit 14) select monitoring options

Device	Code
None	A
Phase failure relay with undervoltage protection (panel mounted) — 190-480 V (PFR w/UV)	C
Phase failure relay with undervoltage protection (panel mounted) — 575 V (PFR w/UV)	D
Phase failure relay — 208 V (PFR)	E[2]
Phase failure relay — 240 V (PFR)	F[2]
Phase failure relay — 480 V (PFR)	G[2]
Phase failure relay — 575 V (PFR)	H[2]
Elapsed time meter (120 V/60 Hz) wired across coil (ETM)	1[3]
ETM + PFR w/UV (190–480 V)	L[3]
ETM + PFR w/UV (575 V)	N[3]
ETM + PFR (208 V)	P[2,3]
ETM + PFR (240 V)	Q[2,3]
ETM + PFR (480V)	R[2,3]
ETM + PFR (575V)	S[2,3]

[2]Available for type 1 enclosure only.
[3]Requires 120 V control circuit voltage or CPT w/ 120 V secondary.

Step 7 (digit 15) select push button/selector switch

Push button/selector switch — heavy duty	Code
None	A
Fwd/rev/stop push button	J
Up/down/stop push button	K
Open/CLS/stop push button	L
HOA and fwd-rev selector switch	P
Fwd-off-rev selector switch	T

CR411 magnetic starters

Reversing, combination, nonfusible and fusible disconnect type

Part number configuration
Valid for NEMA sizes 0-4

Step 8 (digit 16) select pilot device

Pilot light (heavy duty CR104P style) type	Color — functionality	Code
None		A
LED lights	Red and amber across coils	2
	Red and green across coils	3
	Red and amber across coils and unwired green	5
Push-to-test lights	Red and amber across coils	S
	Red and green across coils	T
	Red and amber across coils and unwired green	Y

Step 9 (digit 17) select control options

Device	Code
None	A
1 relay, 2NO-2NC, 24/120 V coil — unwired	B[4]
2 relays, 24/120 V coil - unwired	C[4]
DIN rail — for customer use	D
12 point terminal strip — unwired (12 PT strip)	E
Space heater w/ NC contact	H[5]
1 relay + 12 PT strip	J[4]
2 relays + 12 PT strip	K[4]
DIN rail + 12 PT strip + space heater	L[5]
2 relays + 12 PT strip + space heater	M[4,5]
Time delay on relay, 24/120 V coil — unwired (TD)	N[4]
Time delay off relay, 24/120 V coil — unwired (TD)	P[4]
12 PT strip + TD ON	R[4]
12 PT strip + TD OFF	S[4]
12 PT strip + space heater + TD ON	T[4,5]
12 PT strip + space heater + TD OFF	U[4,5]

General note:
On NEMA size 3 and 4 starters, if selecting factory installed and wired operator devices (push buttons, selector switches, and/or pilot lights) then control circuit fusing, a control power transformer, or 120 V separate sourced control is required when the protective device is rated greater than 100 amps.

CR410 magnetic starters

Reversing, combination, thermal magnetic circuit breaker type

Part number configuration
Valid for NEMA sizes 0-4

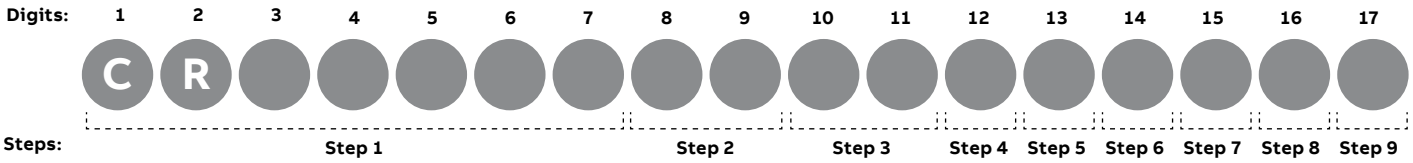

To configure the part number, use the tables below to fill in the digit boxes with the appropriate code.

Step 1 (digits 1-7) select NEMA size and enclosure

	NEMA type 1	NEMA type 3R	NEMA type 12	NEMA type 4
	Standard enclosure	Standard enclosure	Standard enclosure	Standard enclosure
NEMA size	CR	CR	CR	CR
0	410B1	410B6	410B2	410B4
1	410C1	410C6	410C2	410C4
2	410D1	410D6	410D2	410D4
3	410E1	410E6	410E2	410E4
4	410F1	410F6	410F2	410F4

Note: All enclosures include external overload reset buttons. NEMA 4 enclosures are stainless steel.

Step 2 (digits 8, 9) select control voltage (no CPT and standard size CPT)

Control circuit voltage and CPT	No CPT	Control fuses, no CPT	Standard size CPT
120 V w/ surge protector (SP)	01	F1	–
120 V	02	F2	–
240 V	03	F3	–
480 V	04	F4	–
600 V	05	F5	–
208 V	08	F8	–
24 V[1]	09	–	–
240 V/120 V w/CPT	–	–	93
480 V/120 V w/CPT	–	–	94
600 V/120 V w/CPT	–	–	95
208 V/120 V w/CPT	–	–	98
240 V/120 V w/CPT and SP	–	–	33
480 V/120 V w/CPT and SP	–	–	34
600 V/120 V w/CPT and SP	–	–	35
208 V/120 V w/CPT and SP	–	–	38
240 V/24 V w/CPT[1]	–	–	S3
480 V/24 V w/CPT[1]	–	–	S4
600 V/24 V w/CPT[1]	–	–	S5
208 V/24 V w/CPT[1]	–	–	S8

Note: CPT includes 2 primary fuses and 1 secondary fuse.
[1]24 V coils not available for NEMA size 3 and 4.

CR410 magnetic starters

Reversing, combination, thermal magnetic circuit breaker type

Part number configuration
Valid for NEMA sizes 0-4

Step 2 (digits 8, 9) select control voltage (extra capacity CPT + 100 VA and 200 VA)

Control circuit voltage and CPT	Standard size CPT + 100 VA	Standard size CPT + 200 VA
120 V w/ surge protector (SP)	–	–
120 V	–	–
240 V	–	–
480 V	–	–
600 V	–	–
208 V	–	–
24 V[1]	–	–
240 V/120 V w/CPT	13	23
480 V/120 V w/CPT	14	24
600 V/120 V w/CPT	15	25
208 V/120 V w/CPT	18	28
240 V/120 V w/CPT and SP	53	63
480 V/120 V w/CPT and SP	54	64
600 V/120 V w/CPT and SP	55	65
208 V/120 V w/CPT and SP	58	68
240 V/24 V w/CPT[1]	A3	B3
480 V/24 V w/CPT[1]	A4	B4
600 V/24 V w/CPT[1]	A5	B5
208 V/24 V w/CPT[1]	A8	B8

Note: CPT includes 2 primary fuses and 1 secondary fuse.
[1]24 V coils not available for NEMA size 3 and 4.

Step 3 (digits 10, 11) select protective device

Thermal-mag circuit breaker - Spectra™series

	200–208 V			240 V			480 V			600 V		
NEMA size	Max Hp	CB rating (amps)	Code	Max Hp	CB rating (amps)	Code	Max Hp	CB rating (amps)	Code	Max Hp	CB rating (amps)	Code
0	2	15	TC	3	15	TC	5	15	TC	5	15	TC
	3	15	TC	–	–	–	–	–	–	–	–	–
1	–	–	–	–	–	–	–	–	–	7½	15	TC
	5	25	TE	5	25	TE	7½	25	TE	–	–	–
	–	–	–	–	–	–	–	–	–	10	25	TE
	7½	40	TG	7½	40	TG	10	25	TE	10	20	TD
2	–	–	–	–	–	–	15	40	TG	15	40	TG
	10	60	TJ	10	60	TJ	–	–	–	–	–	–
	–	–	–	–	–	–	–	–	–	20	40	TG
	–	–	–	15	60	TJ	20	60	TJ	–	–	–
	–	–	–	–	–	–	25	60	TJ	25	60	TJ
3	–	–	–	–	–	–	30	60	TJ	30	60	TJ
	15	100	TN	20	100	TN	–	–	–	–	–	–
	–	–	–	–	–	–	–	–	–	40	60	TJ
	20	100	TN	25	100	TN	40	100	TN	–	–	–
	–	–	–	–	–	–	50	100	TN	50	100	TN
	25	125	TQ	30	125	TQ	–	–	–	–	–	–
4	30	150	TR	–	–	–	60	150	TR	60	150	TR
	–	–	–	40	200	TT	–	–	–	–	–	–
	–	–	–	–	–	–	75	150	TR	75	150	TR
	40	200	TT	50	200	TT	–	–	–	–	–	–
	–	–	–	–	–	–	100	200	TT	100	200	TT

CR410 magnetic starters

Reversing, combination, thermal magnetic circuit breaker type

Part number configuration
Valid for NEMA sizes 0-4

Step 4 (digit 12) select overload relay

Overload relay	Code
Thermal bi-metallic ambient compensated (1NC)	3
Thermal bi-metallic ambient compensated (1NO–1NC)	4
Solid state overload (1NO–1NC)	(#)

(#) Select code for solid state overload amp rating from standard or optional ranges table below.

Step 4 (digit 12) select overload relay (continued)

Solid state overload relay — standard range

		200–208 V		230–240 V		460–480 V		575–600 V	
NEMA size	OL range	Max Hp	Code	Max Hp	Code	Max Hp	Code	Max Hp	Code
0	0.8–1.7	–	–	–	–	¾	D	1	D
	1.6–3.4	½	E	¾	E	2	E	2	E
	3.2–6.8	1	F	2	F	3	F	5	F
	6.5–13.5	3	G	3	G	5	G	–	–
1	6.5–13.5	–	–	–	–	7½	G	10	G
	13–27	7½	H	7½	H	10	H	–	–
2	13–27	–	–	–	–	20	H	25	H
	25–50	10	J	15	J	25	J	–	–
3	17–35	–	–	–	–	–	–	30	K
	35–70	20	L	25	L	50	L	50	L
	65–135	25	M	30	M	–	–	–	–
4	65–135	40	M	50	M	100	M	100	M

Optional ranges

	NEMA size		
OL amp range	0 and 1	2	3 and 4
0.4–0.85	C	–	–
0.8–1.7	D	–	–
1.6–3.4	E	–	–
3.2–6.8	F	–	–
6.5–13.5	G	G	–
13–27	H	H	–
25–50	–	J	–
17–35	–	–	K
35–70	–	–	L
65–135	–	–	M

Step 5 (digit 13) select auxiliary contacts

Aux contacts (per contactor)	Code
None	A
1NO	B
1NC	C
1NO–1NC	D
2NO	E
2NC	F

Step 6 (digit 14) select monitoring options

Device	Code
None	A
Phase failure relay with undervoltage protection (panel mounted) — 190–480 V (PFR w/UV)	C
Phase failure relay with undervoltage protection (panel mounted) — 575 V (PFR w/UV)	D
Phase failure relay — 208 V (PFR)	E[2]
Phase failure relay — 240 V (PFR)	F[2]
Phase failure relay — 480 V (PFR)	G[2]
Phase failure relay — 575 V (PFR)	H[2]
Elapsed time meter (120 V/60 Hz) wired across coil (ETM)	1[3]
ETM + PFR w/UV (190–480 V)	L[3]
ETM + PFR w/UV (575 V)	N[3]
ETM + PFR (208 V)	P[2,3]
ETM + PFR (240 V)	Q[2,3]
ETM + PFR (480 V)	R[2,3]
ETM + PFR (575 V)	S[2,3]

[2]Available for type 1 enclosure only.
[3]Requires 120 V control circuit voltage or CPT w/ 120 V secondary.

CR410 magnetic starters

Reversing, combination, thermal magnetic circuit breaker type

Part number configuration
Valid for NEMA sizes 0-4

—

Step 7 (digit 15) select push button/selector switch

Push button/selector switch — heavy duty	Code
None	A
Fwd/rev/stop push button	J
Up/down/stop push button	K
Open/CLS/stop push button	L
HOA and fwd-rev selector switch	P
Fwd-off-rev selector switch	T

—

Step 8 (digit 16) select pilot device

Pilot light (heavy duty CR104P style) type	Color — functionality	Code
None		A
LED lights	Red and amber across coils	2
	Red and green across coils	3
	Red and amber across coils and unwired green	5
Push-to-test lights	Red and amber across coils	S
	Red and green across coils	T
	Red and amber across coils and unwired green	Y

—

Step 9 (digit 17) select control options

Device	Code
None	A
1 relay, 2NO-2NC, 24/120 V Coil — unwired	B[4]
2 relays, 24/120 V Coil — unwired	C[4]
DIN rail - for customer use	D
12 point terminal strip — unwired (12 PT strip)	E
Space heater w/ NC contact	H[5]
1 relay + 12 PT strip	J[4]
2 relays + 12 PT strip	K[4]
DIN rail + 12 PT strip + space heater	L[5]
2 relays + 12 PT strip + space heater	M[4,5]
Time delay on relay, 24/120 V coil — unwired (TD)	N[4]
Time delay off relay, 24/120 V coil — unwired (TD)	P[4]
12 PT strip + TD ON	R[4]
12 PT strip + TD OFF	S[4]
12 PT strip + space heater + TD ON	T[4,5]
12 PT strip + space heater + TD OFF	U[4,5]

[4]Relay/timer coil voltage is equivalent to CPT secondary voltage. Requires minimum 100 extra VA CPT option.
[5]Maximum number of auxiliary contacts shall be reduced by 1.

General note:
On NEMA size 3 and 4 starters, if selecting factory installed and wired operator devices (push buttons, selector switches, and/or pilot lights) then control circuit fusing, a control power transformer, or 120 V separate sourced control is required when the protective device is rated greater than 100 amps.

CR490 mag-break magnetic starters

Reversing, combination, mag-break circuit breaker type

Part number configuration
Valid for NEMA sizes 0-4

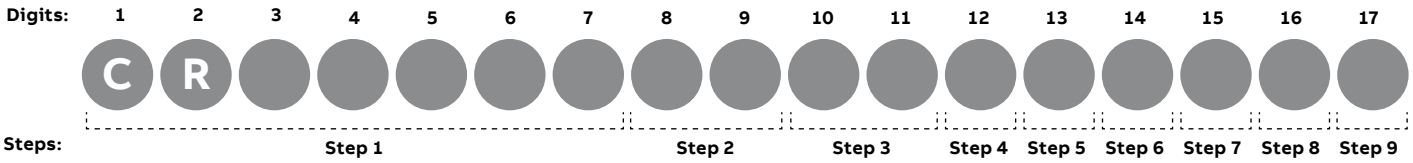

To configure the part number, use the tables below to fill in the digit boxes with the appropriate code.

Step 1 (digits 1-7) select NEMA size and enclosure

NEMA size	NEMA type 1 Standard enclosure CR	NEMA type 3R Standard enclosure CR	NEMA type 12 Standard enclosure CR	NEMA type 4 Standard enclosure CR
0	490B1	490B6	490B2	490B4
1	490C1	490C6	490C2	490C4
2	490D1	490D6	490D2	490D4
3	490E1	490E6	490E2	490E4
4	490F1	490F6	490F2	490F4

Note: All enclosures include external overload reset buttons. NEMA 4 enclosures are stainless steel.

Step 2 (digits 8, 9) select control voltage (no CPT and standard size CPT)

Control circuit voltage and CPT	No CPT	Control fuses, no CPT	Standard size CPT
120 V w/ surge protector (SP)	01	F1	–
120 V	02	F2	–
240 V	03	F3	–
480 V	04	F4	–
600 V	05	F5	–
208 V	08	F8	–
24 V[1]	09	–	–
240 V/120 V w/CPT	–	–	93
480 V/120 V w/CPT	–	–	94
600 V/120 V w/CPT	–	–	95
208 V/120 V w/CPT	–	–	98
240 V/120 V w/CPT and SP	–	–	33
480 V/120 V w/CPT and SP	–	–	34
600 V/120 V w/CPT and SP	–	–	35
208 V/120 V w/CPT and SP	–	–	38
240 V/24 V w/CPT[1]	–	–	S3
480 V/24 V w/CPT[1]	–	–	S4
600 V/24 V w/CPT[1]	–	–	S5
208 V/24 V w/CPT[1]	–	–	S8

Note: CPT includes 2 primary fuses and 1 secondary fuse.
[1]24 V coils not available for NEMA size 3 and 4.

CR490 mag-break magnetic starters

Reversing, combination, mag-break circuit breaker type

Part number configuration
Valid for NEMA sizes 0-4

Step 2 (digits 8, 9) select control voltage (extra capacity CPT + 100 VA and 200 VA)

Control circuit voltage and CPT	Standard size CPT + 100 VA	Standard size CPT + 200 VA
120 V w/ surge protector (SP)	–	–
120 V	–	–
240 V	–	–
480 V	–	–
600 V	–	–
208 V	–	–
24 V[1]	–	–
240 V/120 V w/CPT	13	23
480 V/120 V w/CPT	14	24
600 V/120 V w/CPT	15	25
208 V/120 V w/CPT	18	28
240 V/120 V w/CPT and SP	53	63
480 V/120 V w/CPT and SP	54	64
600 V/120 V w/CPT and SP	55	65
208 V/120 V w/CPT and SP	58	68
240 V/24 V w/CPT[1]	A3	B3
480 V/24 V w/CPT[1]	A4	B4
600 V/24 V w/CPT[1]	A5	B5
208 V/24 V w/CPT[1]	A8	B8

Note: CPT includes 2 primary fuses and 1 secondary fuse.
[1]24 V coils not available for NEMA size 3 and 4.

Step 3 (digits 10, 11) select protective device

Mag-break circuit breaker — Spectra™ series

	208 V			240 V			480 V			600 V		
NEMA size	Max Hp	CB rating (amps)	Code	Max Hp	CB rating (amps)	Code	Max Hp	CB rating (amps)	Code	Max Hp	CB rating (amps)	Code
0	0.5	3	MA	0.5	3	MA	1	3	MA	1	3	MA
	1	7	MB	–	–	–	–	–	–	–	–	–
	–	–	–	–	–	–	3	7	MB	3	7	MB
	3	15	MC	1	7	MB	–	–	–	–	–	–
	–	–	–	3	15	MC	5	15	MC	5	15	MC
1	5	25	ME	5	25	ME	7½	25	ME	10	25	ME
	–	–	–	–	–	–	10	25	ME	–	–	–
	7½	40	MG	7½	40	MG	–	–	–	–	–	–
2	–	–	–	–	–	–	15	40	MG	15	40	MG
	10	60	MJ	10	60	MJ	–	–	–	–	–	–
	–	–	–	–	–	–	–	–	–	–	–	–
	–	–	–	–	–	–	–	–	–	20	40	MG
	–	–	–	15	60	MJ	20	60	MJ	–	–	–
	–	–	–	–	–	–	25	60	MJ	25	60	MJ
3	–	–	–	–	–	–	30	60	MJ	30	60	MJ
	15	100	MN	20	100	MN	–	–	–	–	–	–
	–	–	–	–	–	–	–	–	–	40	60	MJ
	20	100	MN	25	100	MN	40	100	MN	–	–	–
	25	100	MN	30	100	MN	50	100	MN	50	100	MN
4	30	150	MR	–	–	–	60	100	MN	60	100	MN
	–	–	–	40	175	MS	–	–	–	–	–	–
	–	–	–	–	–	–	75	150	MR	75	150	MR
	–	–	–	–	–	–	–	–	–	100	150	MR
	40	175	MS	50	175	MS	100	175	MS	–	–	–

CR490 mag-break magnetic starters

Reversing, combination, mag-break circuit breaker type

Part number configuration
Valid for NEMA sizes 0-4

Step 4 (digit 12) select overload relay

Overload relay	Code
Thermal bi-metallic ambient compensated (1NC)	3
Thermal bi-metallic ambient compensated (1NO–1NC)	4
Solid state overload (1NO–1NC)	(#)

(#) Select code for solid state overload amp rating from standard or optional ranges table below.

Solid state overload relay — standard range

		200–208 V		230–240 V		460–480 V		575–600 V	
NEMA size	OL range	Max Hp	Code	Max Hp	Code	Max Hp	Code	Max Hp	Code
0	0.8–1.7	–	–	–	–	¾	D	1	D
	1.6–3.4	½	E	¾	E	2	E	2	E
	3.2–6.8	1	F	2	F	3	F	5	F
	6.5–13.5	3	G	3	G	5	G	–	–
1	6.5–13.5	–	–	–	–	7½	G	10	G
	13–27	7½	H	7½	H	10	H	–	–
2	13–27	–	–	–	–	20	H	25	H
	25–50	10	J	15	J	25	J	–	–
3	17–35	–	–	–	–	–	–	30	K
	35–70	20	L	25	L	50	L	50	L
	65–135	25	M	30	M	–	–	–	–
4	65–135	40	M	50	M	100	M	100	M

Optional ranges

	NEMA size		
OL amp range	0 and 1	2	3 and 4
0.4–0.85	C	–	–
0.8–1.7	D	–	–
1.6–3.4	E	–	–
3.2–6.8	F	–	–
6.5–13.5	G	G	–
13–27	H	H	–
25–50	–	J	–
17–35	–	–	K
35–70	–	–	L
65–135	–	–	M

Step 5 (digit 13) select auxiliary contacts

Aux contacts	Code
None	A
1NO	B
1NC	C
1NO–1NC	D
2NO	E
2NC	F

Step 6 (digit 14) select monitoring options

Device	Code
None	A
Phase failure relay with undervoltage protection (panel mounted) — 190-480 V (PFR w/UV)	C
Phase failure relay with undervoltage protection (panel mounted) — 575 V (PFR w/UV)	D
Phase failure relay — 208 V (PFR)	E[2]
Phase failure relay — 240 V (PFR)	F[2]
Phase failure relay — 480 V (PFR)	G[2]
Phase failure relay — 575 V (PFR)	H[2]
Elapsed time meter (120 V/60 Hz) wired across coil (ETM)	1[3]
ETM + PFR w/UV (190–480 V)	L[3]
ETM + PFR w/UV (575 V)	N[3]
ETM + PFR (208 V)	P[2,3]
ETM + PFR (240 V)	Q[2,3]
ETM + PFR (480 V)	R[2,3]
ETM + PFR (575 V)	S[2,3]

[2]Available for type 1 enclosure only.
[3]Requires 120 V control circuit voltage or CPT w/ 120 V secondary.

CR490 mag-break magnetic starters

Reversing, combination, mag-break circuit breaker type

Part number configuration
Valid for NEMA sizes 0-4

Step 7 (digit 15) select push button/selector switch

Push button/selector switch — heavy duty	Code
None	A
Fwd/rev/stop push button	J
Up/down/stop push button	K
Open/CLS/stop push button	L
HOA and fwd-rev selector switch	P
Fwd-off-rev selector switch	T

Step 8 (digit 16) select pilot device

Pilot light (heavy duty CR104P style) type	Color — functionality	Code
None		A
LED lights	Red and amber across coils	2
	Red and green across coils	3
	Red and amber across coils and unwired green	5
Push-to-test lights	Red and amber across coils	S
	Red and green across coils	T
	Red and amber across coils and unwired green	Y

Step 9 (digit 17) select control options

Device	Code
None	A
1 relay, 2NO-2NC, 24/120 V coil — unwired	B[4]
2 relays, 24/120 V coil — unwired	C[4]
DIN rail - for customer use	D
12 point terminal strip — unwired (12 PT strip)	E
Space heater w/ NC contact	H[5]
1 relay + 12 PT strip	J[4]
2 relays + 12 PT strip	K[4]
DIN rail + 12 PT strip + space heater	L[5]
2 relays + 12 PT strip + space heater	M[4,5]
Time delay on relay, 24/120 V coil — unwired (TD)	N[4]
Time delay off relay, 24/120 V coil — unwired (TD)	P[4]
12 PT strip + TD ON	R[4]
12 PT strip + TD OFF	S[4]
12 PT strip + space heater + TD ON	T[4,5]
12 PT strip + space heater + TD OFF	U[4,5]

[4]Relay/timer coil voltage is equivalent to CPT secondary voltage. Requires minimum 100 extra VA CPT option.
[5]Maximum number of auxiliary contacts shall be reduced by 1.

General note:
If selecting factory installed and wired operator devices (push buttons, selector switches, and/or pilot lights) control circuit fusing, a control power transformer, or 24 V/120 V separate sourced control is required, regardless of protective device rating.

CR410, CR411, CR490 magnetic starters

Reversing, combination, NEMA type 1, 3R, 12, 4/4X

200 horsepower maximum
NEMA sizes 0-4
600 volts maximum 50/60 Hz

NEMA type 1 enclosure
(Enclosure code = 1)

NEMA size	A	B	C	D	E	F	G	H (dia)	J (dia)	K (dia)
0–2	19.78	33.32	8.14	3.56	1.89	8.00	32.44	0.34	0.41	0.81
	(502.4)	(846.3)	(206.7)	(90.4)	(48.0)	(203.2)	(824.0)	(8.7)	(10.3)	(20.6)
3–4	23.00	53.82	8.14	3.73	3.39	8.00	52.94	0.34	0.41	0.81
	(584.2)	(1367)	(206.7)	(94.6)	(86.1)	(203.2)	(1344.7)	(8.7)	(10.3)	(20.6)

NEMA type 3R/12 enclosure
(Enclosure code = 6 or 2)

NEMA size	A	B	C	D	E	F	G	H (dia)	J (dia)	K (dia)
0–2	20.00	33.25	8.20	3.48	1.91	8.00	32.13	0.34	0.41	0.81
	(508.0)	(844.6)	(208.2)	(88.5)	(48.5)	(203.2)	(816.0)	(8.7)	(10.3)	(20.6)
3–4	23.00	53.82	8.20	3.50	3.41	8.00	52.70	0.34	0.41	0.81
	(584.2)	(1367.0)	(208.2)	(88.8)	(86.6)	(203.2)	(1338.5)	(8.7)	(10.3)	(20.6)

NEMA type 4/4X enclosure
(Enclosure code = 4)

NEMA size	A	B	C	D	E	F	G	H (dia)	J (dia)	K (dia)
0–2	20.00	33.32	8.14	3.72	1.91	8.00	32.20	0.34	0.41	0.81
	(508.0)	(846.3)	(206.7)	(94.6)	(48.5)	(203.2)	(817.8)	(8.7)	(10.3)	(20.6)
3–4	23.00	53.76	8.14	3.55	3.41	8.00	52.64	0.34	0.41	0.81
	(584.2)	(1365.5)	(206.7)	(90.2)	(86.6)	(203.2)	(1336.9)	(8.7)	(10.3)	(20.6)

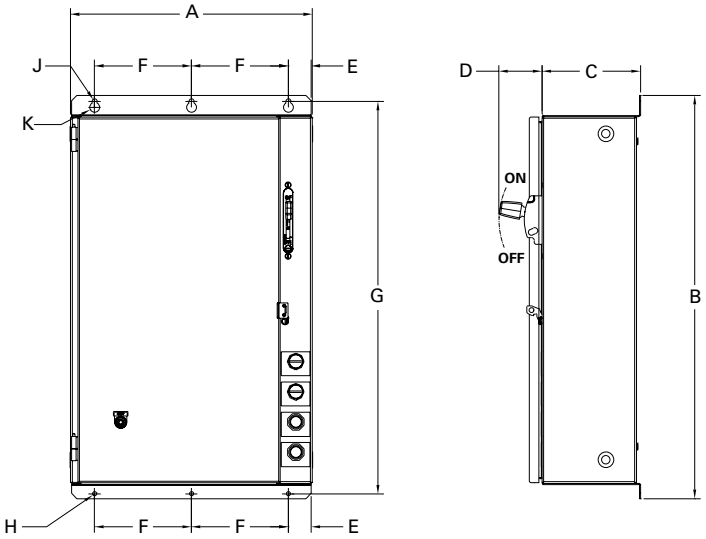

Outlines, dimensions (in. / mm) and weights (for estimating only)

CR310, CR311, CR390 magnetic starters

Reversing, combination, NEMA type 1, 3R, 12, 4/4X

200 horsepower maximum
NEMA size 5
600 volts maximum 50/60 Hz

CR310, CR311 and CR390 NEMA type 12 NEMA size 5
(Enclosure Code = 1)

NEMA size	A	B	C	D	E	F
5	58.50 (1485.9)	34.00 (863.6)	10.50 (266.7)	57.77 (1467.4)	16.00 (406.4)	56.25 (1428.8)

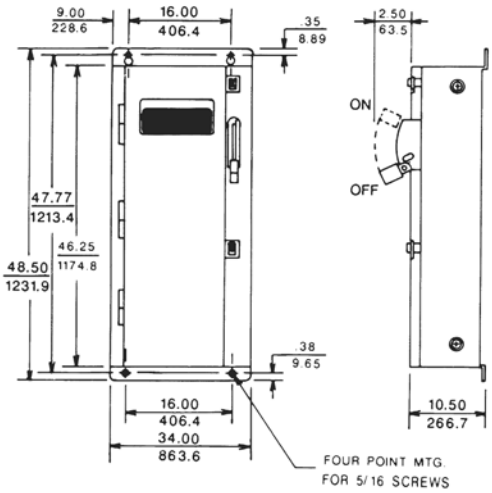

NEMA type 1, CR310, CR311, CR390, size 5

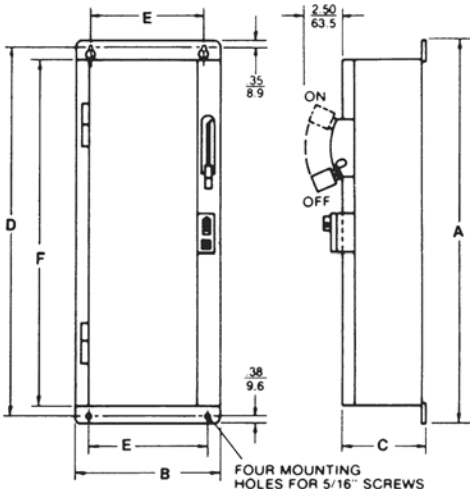

NEMA type 12, CR310, CR311, CR390; size 5

CR413 magnetic starters

2 Speed – 1 winding, nonfusible and fusible disconnect type

Part number configuration
Valid for NEMA sizes 0-4

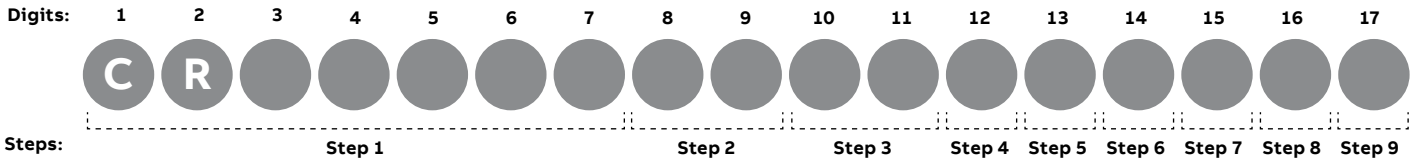

To configure the part number, use the tables below to fill in the digit boxes with the appropriate code.

Step 1 (digits 1-7) select NEMA size and enclosure

	NEMA type 1	NEMA type 3R	NEMA type 12	NEMA type 4
	Standard enclosure	Standard enclosure	Standard enclosure	Standard enclosure
NEMA size	CR	CR	CR	CR
0	413B1	413B6	413B2	413B4
1	413C1	413C6	413C2	413C4
2	413D1	413D6	413D2	413D4
3	413E1	413E6	413E2	413E4
4	413F1	413F6	413F2	413F4

Note: All enclosures include external overload reset buttons. NEMA 4 enclosures are stainless steel.

Step 2 (digits 8, 9) select control voltage (no CPT and standard size CPT)

Control circuit voltage and CPT	No CPT	Control fuses, no CPT	Standard size CPT
120 V w/ surge protector (SP)	01	F1	–
120 V	02	F2	–
240 V	03	F3	–
480 V	04	F4	–
600 V	05	F5	–
208 V	08	F8	–
24 V[1]	09	–	–
240 V/120 V w/CPT	–	–	93
480 V/120 V w/CPT	–	–	94
600 V/120 V w/CPT	–	–	95
208 V/120 V w/CPT	–	–	98
240 V/120 V w/CPT and SP	–	–	33
480 V/120 V w/CPT and SP	–	–	34
600 V/120 V w/CPT and SP	–	–	35
208 V/120 V w/CPT and SP	–	–	38
240 V/24 V w/CPT[1]	–	–	S3
480 V/24 V w/CPT[1]	–	–	S4
600 V/24 V w/CPT[1]	–	–	S5
208 V/24 V w/CPT[1]	–	–	S8

Note: CPT includes 2 primary fuses and 1 secondary fuse.
[1]24 V coils not available for NEMA size 3 and 4.

Step 2 (digits 8, 9) select control voltage (extra capacity CPT + 100 VA and 200 VA)

Control circuit voltage and CPT	Standard size CPT + 100 VA	Standard size CPT + 200 VA
120 V w/ surge protector (SP)	–	–
120 V	–	–
240 V	–	–
480 V	–	–
600 V	–	–
208 V	–	–
24 V[1]	–	–
240 V/120 V w/CPT	13	23
480 V/120 V w/CPT	14	24
600 V/120 V w/CPT	15	25
208 V/120 V w/CPT	18	28
240 V/120 V w/CPT and SP	53	63
480 V/120 V w/CPT and SP	54	64
600 V/120 V w/CPT and SP	55	65
208 V/120 V w/CPT and SP	58	68
240 V/24 V w/CPT[1]	A3	B3
480 V/24 V w/CPT[1]	A4	B4
600 V/24 V w/CPT[1]	A5	B5
208 V/24 V w/CPT[1]	A8	B8

Note: CPT includes 2 primary fuses and 1 secondary fuse.
[1]24 V coils not available for NEMA size 3 and 4.

CR413 magnetic starters

2 Speed – 1 winding, nonfusible and fusible disconnect type

Part number configuration
Valid for NEMA sizes 0-4

Step 3 (digits 10, 11) select protective device

Disconnect without fuse clips

NEMA size	Code
All	1A

Disconnect with class H fuse clips — for use with non-time delay/single element class H fuses

	200–208 V			230–240 V			460–480 V			575–600 V		
NEMA size	Max Hp	Fuse clip (amps)	Code	Max Hp	Fuse clip (amps)	Code	Max Hp	Fuse clip (amps)	Code	Max Hp	Fuse clip (amps)	Code
0	3	30	HA	3	30	HA	5	30	H3	5	30	H3
1	–	–	–	–	–	–	7½	30	H3	10	30	H3
	7½	60	HB	7½	60	HB	10	60	H6	–	60	H6
2	–	–	–	–	–	–	15	60	H6	20	60	H6
	10	100	HC	15	100	HC	25	100	H1	25	100	H1
3	–	–	–	–	–	–	30	100	H1	30	100	H1
	25	200	HD	30	200	HD	50	200	H2	50	200	H2
4	–	–	–	–	–	–	60	200	H2	60	200	H2
	40	400	HE	50	400	HE	100	400	H4	100	400	H4

Disconnect with class R fuse clips — for use with time delay/dual element class RK1/RK5 fuses

	200–208 V			230–240 V			460–480 V			575–600 V		
NEMA size	Max Hp	Fuse clip (amps)	Code	Max Hp	Fuse clip (amps)	Code	Max Hp	Fuse clip (amps)	Code	Max Hp	Fuse clip (amps)	Code
0	3	30	RA	3	30	RA	5	30	R3	5	30	R3
1	5	30	RA	5	30	RA	10	30	R3	10	30	R3
	7½	60	RB	7½	60	RB	–	–	–	–	–	–
2		–	–	–	–	–	–	30	R3	15	30	R3
	10	60	RB	15	60	RB	25	60	R6	25	60	R6
3	–	–	–	–	–	–	–	60	R6	30	60	R6
	20	100	RC	25	100	RC	50	100	R1	50	100	R1
	25	200	RD	30	200	RD	–	–	–	–	–	–
4	–	–	–	–	–	–	–	100	R1	60	100	R1
	400	200	RD	50	200	RD	100	200	R2	100	200	R2

CR413 magnetic starters

2 Speed – 1 winding, nonfusible and fusible disconnect type

Part number configuration
Valid for NEMA sizes 0-4

Step 3 (digits 10, 11) select protective device (continued)

Disconnect with class J fuse clips — for use with time delay/dual element class J fuses

	200–208 V			230–240 V			460–480 V			575–600 V		
NEMA size	Max Hp	Fuse clip (amps)	Code	Max Hp	Fuse clip (amps)	Code	Max Hp	Fuse clip (amps)	Code	Max Hp	Fuse clip (amps)	Code
0	3	30	J3	3	30	J3	5	30	J3	5	30	J3
1	5	30	J3	5	30	J3	10	30	J3	10	30	J3
	7½	60	J6	7½	60	J6	–	–	–	–	–	–
2	–	–	–	–	–	–	–	30	J3	15	30	J3
	10	60	J6	15	60	J6	25	60	J6	25	60	J6
3	–							60	J6	30	60	J6
	20	100	J1	25	100	J1	50	100	J1	50	100	J1
4	25	200	J2	30	200	J2	–	–	–	–	–	–
	–	–	–	–	–	–	–	100	J1	60	100	J1
	40	200	J2	50	200	J2	100	200	J2	100	200	J2

Step 4 (digit 12) select overload relay

Overload relay	Code
Thermal bi-metallic ambient compensated (1NC)	3
Thermal bi-metallic ambient compensated (1NO–1NC)	4
Solid state overload (1NO–1NC)	(#)

(#) Select code for solid state overload amp rating from standard or optional ranges table below.

2-Speed solid state overload ranges

	NEMA size					
	0 and 1		2		3 and 4	
Code	Hi amp	Lo amp	Hi amp	Lo amp	Hi amp	Lo amp
C	0.4–0.85	0.4–0.85	6.5–13.5	6.5–13.5	17–35	17–35
D	0.8–1.7	0.4–0.85	13–27	6.5–13.5	35–70	17–35
E	0.8–1.7	0.8–1.7	13–27	13–27	35–70	35–70
F	1.6–3.4	0.4–0.85	25–50	6.5 -13.5	65–135	17–35
G	1.6–3.4	0.8–1.7	25–50	13–27	65–135	35–70
H	1.6–3.4	1.6–3.4	25–50	25–50	65–135	65–135
U	3.2–6.8	0.8–1.7	–	–	–	–
K	3.2–6.8	1.6–3.4	–	–	–	–
L	3.2–6.8	3.2–6.8	–	–	–	–
M	6.5–13.5	1.6–3.4	–	–	–	–
V	6.5–13.5	3.2–6.8	–	–	–	–
W	6.5–13.5	6.5–13.5	–	–	–	–
R	13–27	3.2–6.8	–	–	–	–
S	13–27	6.5–13.5	–	–	–	–
T	13–27	13–27	–	–	–	–

CR413 magnetic starters

2 Speed – 1 winding, nonfusible and fusible disconnect type

Part number configuration
Valid for NEMA sizes 0-4

Step 5 (digit 13) select auxiliary contacts

Aux contacts (per contactor)	Code
None	A
1NO	B
1NC	C
1NO–1NC	D[2]
2NO	E[2]
2NC	F[2]

[2]Not available on 2 speed — 1 winding sizes 0-1.

Step 6 (digit 14) select monitoring options

Device	Code
None	A
Phase failure relay with undervoltage protection (panel mounted) — 190–480 V (PFR w/UV)	C
Phase failure relay with undervoltage protection (panel mounted) — 575 V (PFR w/UV)	D
Phase failure relay — 208 V (PFR)	E[3]
Phase failure relay — 240 V (PFR)	F[3]
Phase failure relay — 480 V (PFR)	G[3]
Phase failure relay — 575 V (PFR)	H[3]
Elapsed time meter (120 V/60 Hz) wired across coil (ETM)	1[4]
ETM + PFR w/UV (190–480 V)	L[4]
ETM + PFR w/UV (575 V)	N[4]
ETM + PFR (208 V)	P[3,4]
ETM + PFR (240 V)	Q[3,4]
ETM + PFR (480 V)	R[3,4]
ETM + PFR (575 V)	S[3,4]

[3]Available for type 1 enclosure only.
[4]Requires 120 V control circuit voltage or CPT w/ 120 V secondary.

Step 7 (digit 15) select push button/selector switch

Push button/selector switch — heavy duty	Code
None	A
Fast/slow/stop push button	J
High/low/off push button	K
High/low push button and HOA selector switch	L
Fast/slow push button and HOA selector switch	M
HOA and slow/fast selector switches	P
HOA and low/high selector switches	R
Slow-off-fast selector switch	T
Low-off-high selector switch	U
Fast-slow-off-auto selector switch	V
High-low-off-auto selector switch	W

CR413 magnetic starters

2 Speed – 1 winding, nonfusible and fusible disconnect type

Part number configuration
Valid for NEMA sizes 0-4

Step 8 (digit 16) select pilot device

Pilot light (heavy duty CR104P style) type	Color — functionality	Code
None		A
LED lights	Red and amber across coils	2
	Red and green across coils	3
	Red and amber across coils and unwired green	5
Push-to-test lights	Red and amber across coils	S
	Red and green across coils	T
	Red and amber across coils and unwired green	Y

Step 9 (digit 17) select control options

Device	Code
None	A
1 relay, 2NO-2NC, 24/120 V coil - unwired	B[5]
2 relays, 24/120 V coil - unwired	C[5]
DIN rail - for customer use	D
12 point terminal strip - unwired (12 PT strip)	E
Space heater w/ NC contact	H[6]
1 relay + 12 PT strip	J[5]
2 relays + 12 PT strip	K[5]
DIN rail + 12 PT strip + space heater	L[6]
2 relays + 12 PT strip + space heater	M[5,6]
Time delay on relay, 24/120 V coil - unwired (TD)	N[5]
Time delay off relay, 24/120 V coil - unwired (TD)	P[5]
12 PT strip + TD ON	R[5]
12 PT strip + TD OFF	S[5]
12 PT strip + space heater + TD ON	T[5,6]
12 PT strip + space heater + TD OFF	U[5,6]

[5]Relay/timer coil voltage is equivalent to CPT secondary voltage. Requires minimum 100 extra VA CPT option.
[6]Maximum number of auxiliary contacts shall be reduced by 1.

General note:
On NEMA size 3 and 4 starters, if selecting factory installed and wired operator devices (push buttons, selector switches, and/or pilot lights) then control circuit fusing, a control power transformer, or 120 V separate sourced control is required when the protective device is rated greater than 100 amps.

CR412 magnetic starters

2 Speed – 1 winding, thermal magnetic circuit breaker

Part number configuration
Valid for NEMA sizes 0-4

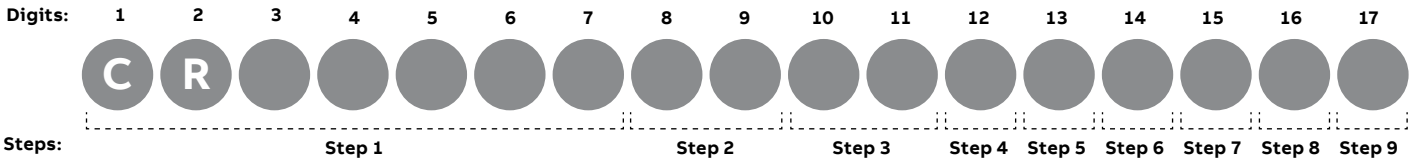

To configure the part number, use the tables below to fill in the digit boxes with the appropriate code.

Step 1 (digits 1-7) select NEMA size and enclosure

	NEMA type 1	NEMA type 3R	NEMA type 12	NEMA type 4
	Standard enclosure	Standard enclosure	Standard enclosure	Standard enclosure
NEMA size	CR	CR	CR	CR
0	412B1	412B6	412B2	412B4
1	412C1	412C6	412C2	412C4
2	412D1	412D6	412D2	412D4
3	412E1	412E6	412E2	412E4
4	412F1	412F6	412F2	412F4

Note: All enclosures include external overload reset buttons. NEMA 4 enclosures are stainless steel.

Step 2 (digits 8, 9) select control voltage (no CPT and standard size CPT)

Control circuit voltage and CPT	No CPT	Control fuses, no CPT	Standard size CPT
120 V w/ surge protector (SP)	01	F1	–
120 V	02	F2	–
240 V	03	F3	–
480 V	04	F4	–
600 V	05	F5	–
208 V	08	F8	–
24 V[1]	09	–	–
240 V/120 V w/CPT	–	–	93
480 V/120 V w/CPT	–	–	94
600 V/120 V w/CPT	–	–	95
208 V/120 V w/CPT	–	–	98
240 V/120 V w/CPT and SP	–	–	33
480 V/120 V w/CPT and SP	–	–	34
600 V/120 V w/CPT and SP	–	–	35
208 V/120 V w/CPT and SP	–	–	38
240 V/24 V w/CPT[1]	–	–	S3
480 V/24 V w/CPT[1]	–	–	S4
600 V/24 V w/CPT[1]	–	–	S5
208 V/24 V w/CPT[1]	–	–	S8

Note: CPT includes 2 primary fuses and 1 secondary fuse.
[1]24 V coils not available for NEMA size 3 and 4.

CR412 magnetic starters

2 Speed – 1 winding, thermal magnetic circuit breaker

Part number configuration
Valid for NEMA sizes 0-4

Step 2 (digits 8, 9) select control voltage (extra capacity CPT + 100 VA and 200 VA)

Control circuit voltage and CPT	Standard size CPT + 100 VA	Standard size CPT + 200 VA
120 V w/ surge protector (SP)	–	–
120 V	–	–
240 V	–	–
480 V	–	–
600 V	–	–
208 V	–	–
24 V[1]	–	–
240 V/120 V w/CPT	13	23
480 V/120 V w/CPT	14	24
600 V/120 V w/CPT	15	25
208 V/120 V w/CPT	18	28
240 V/120 V w/CPT and SP	53	63
480 V/120 V w/CPT and SP	54	64
600 V/120 V w/CPT and SP	55	65
208 V/120 V w/CPT and SP	58	68
240 V/24 V w/CPT[1]	A3	B3
480 V/24 V w/CPT[1]	A4	B4
600 V/24 V w/CPT[1]	A5	B5
208 V/24 V w/CPT[1]	A8	B8

Note: CPT includes 2 primary fuses and 1 secondary fuse.
[1]24 V coils not available for NEMA size 3 and 4.

Step 3 (digits 10, 11) select protective device

Thermal-mag circuit breaker - Spectra™series

	200–208 V			240 V			480 V			600 V		
NEMA size	Max Hp	CB rating (amps)	Code	Max Hp	CB rating (amps)	Code	Max Hp	CB rating (amps)	Code	Max Hp	CB rating (amps)	Code
0	2	15	TC	3	15	TC	5	15	TC	5	15	TC
	3	15	TC	–	–	–	–	–	–	–	–	–
1	–	–	–	–	–	–	–	–	–	7½	15	TC
	5	25	TE	5	25	TE	7½	25	TE	–	–	–
	–	–	–	–	–	–	–	–	–	10	25	TE
	7½	40	TG	7½	40	TG	10	25	TE	10	20	TD
2	–	–	–	–	–	–	15	40	TG	15	40	TG
	10	60	TJ	10	60	TJ	–	–	–	–	–	–
	–	–	–	–	–	–	–	–	–	20	40	TG
	–	–	–	15	60	TJ	20	60	TJ	–	–	–
	–	–	–	–	–	–	25	60	TJ	25	60	TJ
3	–	–	–	–	–	–	30	60	TJ	30	60	TJ
	15	100	TN	20	100	TN	–	–	–	–	–	–
	–	–	–	–	–	–	–	–	–	40	60	TJ
	20	100	TN	25	100	TN	40	100	TN	–	–	–
	–	–	–	–	–	–	50	100	TN	50	100	TN
	25	125	TQ	30	125	TQ	–	–	–	–	–	–
4	30	150	TR	–	–	–	60	150	TR	60	150	TR
	–	–	–	40	200	TT	–	–	–	–	–	–
	–	–	–	–	–	–	75	150	TR	75	150	TR
	40	200	TT	50	200	TT	–	–	–	–	–	–
	–	–	–	–	–	–	100	200	TT	100	200	TT

CR412 magnetic starters

2 Speed – 1 winding, thermal magnetic circuit breaker

Part number configuration
Valid for NEMA sizes 0-4

Step 4 (digit 12) select overload relay

Overload relay	Code
Thermal bi-metallic ambient compensated (1NC)	3
Thermal bi-metallic ambient compensated (1NO–1NC)	4
Solid state overload (1NO–1NC)	(#)

(#) Select code for solid state overload amp rating from standard or optional ranges table below.

2-Speed solid state overload ranges

						NEMA size
		0 and 1		2		3 and 4
Code	Hi Amp	Lo Amp	Hi Amp	Lo Amp	Hi Amp	Lo Amp
C	0.4–0.85	0.4–0.85	6.5–13.5	6.5–13.5	17–35	17–35
D	0.8–1.7	0.4–0.85	13–27	6.5–13.5	35–70	17–35
E	0.8–1.7	0.8–1.7	13–27	13–27	35–70	35–70
F	1.6–3.4	0.4–0.85	25–50	6.5 -13.5	65–135	17–35
G	1.6–3.4	0.8–1.7	25–50	13–27	65–135	35–70
H	1.6–3.4	1.6–3.4	25–50	25–50	65–135	65–135
U	3.2–6.8	0.8–1.7	–	–	–	–
K	3.2–6.8	1.6–3.4	–	–	–	–
L	3.2–6.8	3.2–6.8	–	–	–	–
M	6.5–13.5	1.6–3.4	–	–	–	–
V	6.5–13.5	3.2–6.8	–	–	–	–
W	6.5–13.5	6.5–13.5	–	–	–	–
R	13–27	3.2–6.8	–	–	–	–
S	13–27	6.5–13.5	–	–	–	–
T	13–27	13–27	–	–	–	–

Step 5 (digit 13) select auxiliary contacts

Aux contacts (per contactor)	Code
None	A
1NO	B
1NC	C
1NO–1NC	D[2]
2NO	E[2]
2NC	F[2]

[2]Not available on 2 speed – 1 winding sizes 0-1.

Step 6 (digit 14) select monitoring options

Device	Code
None	A
Phase failure relay with undervoltage protection (panel mounted) - 190-480 V (PFR w/UV)	C
Phase failure relay with undervoltage protection (panel mounted) - 575 V (PFR w/UV)	D
Phase failure relay — 208 V (PFR)	E[3]
Phase failure relay — 240 V (PFR)	F[3]
Phase failure relay — 480 V (PFR)	G[3]
Phase failure relay — 575 V (PFR)	H[3]
Elapsed time meter (120 V/60 Hz) wired across coil (ETM)	1[4]
ETM + PFR w/UV (190–480 V)	L[4]
ETM + PFR w/UV (575 V)	N[4]
ETM + PFR (208 V)	P[3,4]
ETM + PFR (240 V)	Q[3,4]
ETM + PFR (480 V)	R[3,4]
ETM + PFR (575 V)	S[3,4]

[3]Available for Type 1 Enclosure only.
[4]Requires 120 V control circuit voltage or CPT w/ 120 V secondary.

CR412 magnetic starters

2 Speed – 1 winding, thermal magnetic circuit breaker

Part number configuration
Valid for NEMA sizes 0-4

Step 7 (digit 15) select push button/selector switch

Push button/selector switch — heavy duty	Code
None	A
Fast/slow/stop push button	J
High/low/off push button	K
High/low push button and HOA selector switch	L
Fast/slow push button and HOA selector switch	M
HOA and slow/fast selector switches	P
HOA and low/high selector switches	R
Slow-off-fast selector switch	T
Low-off-high selector switch	U
Fast-slow-off-auto selector switch	V
High-low-off-auto selector switch	W

Step 8 (digit 16) select pilot device

Pilot light (heavy duty CR104P style) type	Color — functionality	Code
None		A
LED lights	Red and amber across coils	2
	Red and green across coils	3
	Red and amber across coils and unwired green	5
Push-to-test lights	Red and amber across coils	S
	Red and green across coils	T
	Red and amber across coils and unwired green	Y

Step 9 (digit 17) select control options

Device	Code
None	A
1 relay, 2NO-2NC, 24/120 V coil - unwired	B[5]
2 relays, 24/120 V coil - unwired	C[5]
DIN rail - for customer use	D
12 point terminal strip - unwired (12 PT strip)	E
Space heater w/ NC contact	H[6]
1 relay + 12 PT strip	J[5]
2 relays + 12 PT strip	K[5]
DIN rail + 12 PT strip + space heater	L[6]
2 relays + 12 PT strip + space heater	M[5,6]
Time delay on relay, 24/120 V coil - unwired (TD)	N[5]
Time delay off relay, 24/120 V coil - unwired (TD)	P[5]
12 PT strip + TD ON	R[5]
12 PT strip + TD OFF	S[5]
12 PT strip + space heater + TD ON	T[5,6]
12 PT strip + space heater + TD OFF	U[5,6]

[5]Relay/timer coil voltage is equivalent to CPT secondary voltage. Requires minimum 100 extra VA CPT option.
[6]Maximum number of auxiliary contacts shall be reduced by 1.

General note:
On NEMA size 3 and 4 starters, if selecting factory installed and wired operator devices (push buttons, selector switches, and/or pilot lights) then control circuit fusing, a control power transformer, or 120 V separate sourced control is required when the protective device is rated greater than 100 amps.

CR492 mag-break magnetic starters

2 Speed – 1 winding, mag-break circuit breaker type

Part number configuration
Valid for NEMA sizes 0-4

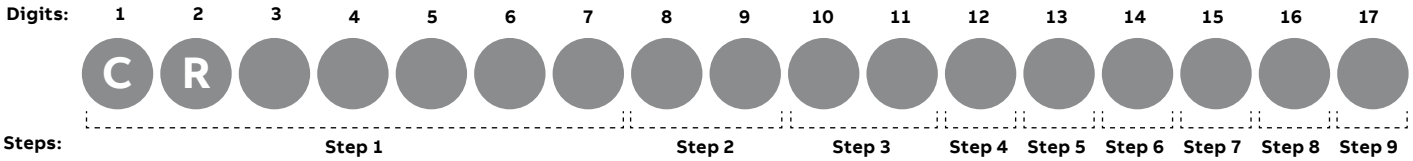

To configure the part number, use the tables below to fill in the digit boxes with the appropriate code.

Step 1 (digits 1-7) select NEMA size and enclosure

NEMA size	NEMA type 1 Standard enclosure CR	NEMA type 3R Standard enclosure CR	NEMA type 12 Standard enclosure CR	NEMA type 4 Standard enclosure CR
0	492B1	492B6	492B2	492B4
1	492C1	492C6	492C2	492C4
2	492D1	492D6	492D2	492D4
3	492E1	492E6	492E2	492E4
4	492F1	492F6	492F2	492F4

Note: All enclosures include external overload reset buttons. NEMA 4 enclosures are stainless steel.

Step 2 (digits 8, 9) select control voltage (no CPT and standard size CPT)

Control circuit voltage and CPT	No CPT	Control fuses, no CPT	Standard size CPT
120 V w/ surge protector (SP)	01	F1	–
120 V	02	F2	–
240 V	03	F3	–
480 V	04	F4	–
600 V	05	F5	–
208 V	08	F8	–
24 V[1]	09	–	–
240 V/120 V w/CPT	–	–	93
480 V/120 V w/CPT	–	–	94
600 V/120 V w/CPT	–	–	95
208 V/120 V w/CPT	–	–	98
240 V/120 V w/CPT and SP	–	–	33
480 V/120 V w/CPT and SP	–	–	34
600 V/120 V w/CPT and SP	–	–	35
208 V/120 V w/CPT and SP	–	–	38
240 V/24 V w/CPT[1]	–	–	S3
480 V/24 V w/CPT[1]	–	–	S4
600 V/24 V w/CPT[1]	–	–	S5
208 V/24 V w/CPT[1]	–	–	S8

Note: CPT includes 2 primary fuses and 1 secondary fuse.
[1]24 V coils not available for NEMA size 3 and 4.

CR492 mag-break magnetic starters

2 Speed – 1 winding, mag-break circuit breaker type

Part number configuration
Valid for NEMA sizes 0-4

Step 2 (digits 8, 9) select control voltage (extra capacity CPT + 100 VA and 200 VA)

Control circuit voltage and CPT	Standard size CPT + 100 VA	Standard size CPT + 200 VA
120 V w/ surge protector (SP)	–	–
120 V	–	–
240 V	–	–
480 V	–	–
600 V	–	–
208 V	–	–
24 V[1]	–	–
240 V/120 V w/CPT	13	23
480 V/120 V w/CPT	14	24
600 V/120 V w/CPT	15	25
208 V/120 V w/CPT	18	28
240 V/120 V w/CPT and SP	53	63
480 V/120 V w/CPT and SP	54	64
600 V/120 V w/CPT and SP	55	65
208 V/120 V w/CPT and SP	58	68
240 V/24 V w/CPT[1]	A3	B3
480 V/24 V w/CPT[1]	A4	B4
600 V/24 V w/CPT[1]	A5	B5
208 V/24 V w/CPT[1]	A8	B8

Note: CPT includes 2 primary fuses and 1 secondary fuse.
[1]24 V coils not available for NEMA size 3 and 4.

Step 3 (digits 10, 11) select protective device

Mag-break circuit breaker — Spectra™ series

	208 V			240 V			480 V			600 V		
NEMA size	Max Hp	CB rating (amps)	Code	Max Hp	CB rating (amps)	Code	Max Hp	CB rating (amps)	Code	Max Hp	CB rating (amps)	Code
0	0.5	3	MA	0.5	3	MA	1	3	MA	1	3	MA
	1	7	MB	–	–	–	–	–	–	–	–	–
	–	–	–	–	–	–	3	7	MB	3	7	MB
	3	15	MC	1	7	MB	–	–	–	–	–	–
	–	–	–	3	15	MC	5	15	MC	5	15	MC
1	5	25	ME	5	25	ME	7½	25	ME	10	25	ME
	–	–	–	–	–	–	10	25	ME	–	–	–
	7½	40	MG	7½	40	MG	–	–	–	–	–	–
2	–	–	–	–	–	–	15	40	MG	15	40	MG
	10	60	MJ	10	60	MJ	–	–	–	–	–	–
	–	–	–	–	–	–	–	–	–	–	–	–
	–	–	–	–	–	–	–	–	–	20	40	MG
	–	–	–	15	60	MJ	20	60	MJ	–	–	–
	–	–	–	–	–	–	25	60	MJ	25	60	MJ
3	–	–	–	–	–	–	30	60	MJ	30	60	MJ
	15	100	MN	20	100	MN	–	–	–	–	–	–
	–	–	–	–	–	–	–	–	–	40	60	MJ
	20	100	MN	25	100	MN	40	100	MN	–	–	–
	25	100	MN	30	100	MN	50	100	MN	50	100	MN
4	30	150	MR	–	–	–	60	100	MN	60	100	MN
	–	–	–	40	175	MS	–	–	–	–	–	–
	–	–	–	–	–	–	75	150	MR	75	150	MR
	–	–	–	–	–	–	–	–	–	100	150	MR
	40	175	MS	50	175	MS	100	175	MS	–	–	–

CR492 mag-break magnetic starters

2 Speed – 1 winding, mag-break circuit breaker type

Part number configuration
Valid for NEMA sizes 0-4

Step 4 (digit 12) select overload relay

Overload relay	Code
Thermal bi-metallic ambient compensated (1NC)	3
Thermal bi-metallic ambient compensated (1NO–1NC)	4
Solid state overload (1NO–1NC)	(#)

(#) Select code for solid state overload amp rating from ranges table below.

2-Speed solid state overload ranges

						NEMA size
		0 and 1		2		3 and 4
Code	Hi Amp	Lo Amp	Hi Amp	Lo Amp	Hi Amp	Lo Amp
C	0.4–0.85	0.4–0.85	6.5–13.5	6.5–13.5	17–35	17–35
D	0.8–1.7	0.4–0.85	13–27	6.5–13.5	35–70	17–35
E	0.8–1.7	0.8–1.7	13–27	13–27	35–70	35–70
F	1.6–3.4	0.4–0.85	25–50	6.5 -13.5	65–135	17–35
G	1.6–3.4	0.8–1.7	25–50	13–27	65–135	35–70
H	1.6–3.4	1.6–3.4	25–50	25–50	65–135	65–135
U	3.2–6.8	0.8–1.7	–	–	–	–
K	3.2–6.8	1.6–3.4	–	–	–	–
L	3.2–6.8	3.2–6.8	–	–	–	–
M	6.5–13.5	1.6–3.4	–	–	–	–
V	6.5–13.5	3.2–6.8	–	–	–	–
W	6.5–13.5	6.5–13.5	–	–	–	–
R	13–27	3.2–6.8	–	–	–	–
S	13–27	6.5–13.5	–	–	–	–
T	13–27	13–27	–	–	–	–

Step 5 (digit 13) select auxiliary contacts

Aux contacts (per contactor)	Code
None	A
1NO	B
1NC	C
1NO–1NC	D[2]
2NO	E[2]
2NC	F[2]

[2]Not available on 2 speed – 1 winding sizes 0-1.

Step 6 (digit 14) select monitoring options

Device	Code
None	A
Phase failure relay with undervoltage protection (panel mounted) - 190-480 V (PFR w/UV)	C
Phase failure relay with undervoltage protection (panel mounted) - 575 V (PFR w/UV)	D
Phase failure relay - 208 V (PFR)	E[3]
Phase failure relay - 240 V (PFR)	F[3]
Phase failure relay - 480 V (PFR)	G[3]
Phase failure relay - 575 V (PFR)	H[3]
Elapsed time meter (120 V/60 Hz) wired across coil (ETM)	1[4]
ETM + PFR w/UV (190-480 V)	L[4]
ETM + PFR w/UV (575 V)	N[4]
ETM + PFR (208 V)	P[3,4]
ETM + PFR (240 V)	Q[3,4]
ETM + PFR (480 V)	R[3,4]
ETM + PFR (575 V)	S[3,4]

[3]Available for type 1 enclosure only.
[4]Requires 120 V control circuit voltage or CPT w/ 120 V secondary.

CR492 mag-break magnetic starters

2 Speed – 1 winding, mag-break circuit breaker type

Part number configuration
Valid for NEMA sizes 0-4

Step 7 (digit 15) select push button/selector switch

Push button/selector switch — heavy duty	Code
None	A
Fast/slow/stop push button	J
High/low/off push button	K
High/low push button and HOA selector switch	L
Fast/slow push button and HOA selector switch	M
HOA and slow/fast selector switches	P
HOA and Low/high selector switches	R
Slow-off-fast selector switch	T
Low-off-high selector switch	U
Fast-slow-off-auto selector switch	V
High-low-off-auto selector switch	W

Step 8 (digit 16) select pilot device

Pilot light (heavy duty CR104P style) type	Color — functionality	Code
None		A
LED lights	Red and amber across coils	2
	Red and green across coils	3
	Red and amber across coils and unwired green	5
Push-to-test lights	Red and amber across coils	S
	Red and green across coils	T
	Red and amber across coils and unwired green	Y

Step 9 (digit 17) select control options

Device	Code
None	A
1 relay, 2NO-2NC, 24/120 V coil — unwired	B[5]
2 relays, 24/120 V coil — unwired	C[5]
DIN rail — for customer use	D
12 point terminal strip — unwired (12 PT strip)	E
Space heater w/ NC contact	H[6]
1 relay + 12 PT strip	J[5]
2 relays + 12 PT strip	K[5]
DIN rail + 12 PT strip + space heater	L[6]
2 relays + 12 PT strip + space heater	M[5,6]
Time delay on relay, 24/120 V coil — unwired (TD)	N[5]
Time delay off relay, 24/120 V coil — unwired (TD)	P[5]
12 PT strip + TD ON	R[5]
12 PT strip + TD OFF	S[5]
12 PT strip + space heater + TD ON	T[5,6]
12 PT strip + space heater + TD OFF	U[5,6]

[5]Relay/timer coil voltage is equivalent to CPT secondary voltage. Requires minimum 100 extra VA CPT option.
[6]Maximum number of auxiliary contacts shall be reduced by 1.

General note:
If selecting factory installed and wired operator devices (push buttons, selector switches, and/or pilot lights) control circuit fusing, a control power transformer, or 24 V/120 V separate sourced control is required, regardless of protective device rating.

CR415 magnetic starters

2 speed – 2 winding, nonfusible and fusible disconnect type

Part number configuration
Valid for NEMA sizes 0-4

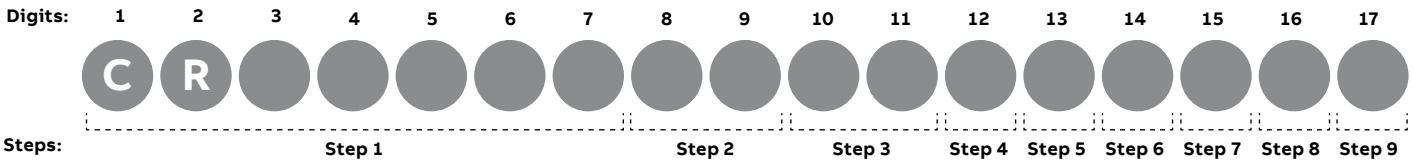

To configure the part number, use the tables below to fill in the digit boxes with the appropriate code.

Step 1 (digits 1-7) select NEMA size and enclosure

	NEMA type 1	NEMA type 3R	NEMA type 12	NEMA type 4
	Standard enclosure	Standard enclosure	Standard enclosure	Standard enclosure
NEMA size	CR	CR	CR	CR
0	415B1	415B6	415B2	415B4
1	415C1	415C6	415C2	415C4
2	415D1	415D6	415D2	415D4
3	415E1	415E6	415E2	415E4
4	415F1	415F6	415F2	415F4

Note: All enclosures include external overload reset buttons. NEMA 4 enclosures are stainless steel.

Step 2 (digits 8, 9) select control voltage (no CPT and standard size CPT)

Control circuit voltage and CPT	No CPT	Control fuses, no CPT	Standard size CPT
120 V w/ surge protector (SP)	01	F1	–
120 V	02	F2	–
240 V	03	F3	–
480 V	04	F4	–
600 V	05	F5	–
208 V	08	F8	–
24 V[1]	09	–	–
240 V/120 V w/CPT	–	–	93
480 V/120 V w/CPT	–	–	94
600 V/120 V w/CPT	–	–	95
208 V/120 V w/CPT	–	–	98
240 V/120 V w/CPT and SP	–	–	33
480 V/120 V w/CPT and SP	–	–	34
600 V/120 V w/CPT and SP	–	–	35
208 V/120 V w/CPT and SP	–	–	38
240 V/24 V w/CPT[1]	–	–	S3
480 V/24 V w/CPT[1]	–	–	S4
600 V/24 V w/CPT[1]	–	–	S5
208 V/24 V w/CPT[1]	–	–	S8

Note: CPT includes 2 primary fuses and 1 secondary fuse.
[1]24 V coils not available for NEMA size 3 and 4.

CR415 magnetic starters

2 speed – 2 winding, nonfusible and fusible disconnect type

Part number configuration
Valid for NEMA sizes 0-4

Step 2 (digits 8, 9) select control voltage (extra capacity CPT + 100 VA and 200 VA)

Control circuit voltage and CPT	Standard size CPT + 100 VA	Standard size CPT + 200 VA
120 V w/ surge protector (SP)	–	–
120 V	–	–
240 V	–	–
480 V	–	–
600 V	–	–
208 V	–	–
24 V[1]	–	–
240 V/120 V w/CPT	13	23
480 V/120 V w/CPT	14	24
600 V/120 V w/CPT	15	25
208 V/120 V w/CPT	18	28
240 V/120 V w/CPT and SP	53	63
480 V/120 V w/CPT and SP	54	64
600 V/120 V w/CPT and SP	55	65
208 V/120 V w/CPT and SP	58	68
240 V/24 V w/CPT[1]	A3	B3
480 V/24 V w/CPT[1]	A4	B4
600 V/24 V w/CPT[1]	A5	B5
208 V/24 V w/CPT[1]	A8	B8

Note: CPT includes 2 primary fuses and 1 secondary fuse.
[1]24 V coils not available for NEMA size 3 and 4.

Step 3 (digits 10, 11) select protective device

Disconnect without fuse clips

NEMA size	Code
All	1A

Disconnect with class H fuse clips — for use with non-time delay/single element class H fuses

	200–208 V			230–240 V			460–480 V			575–600 V		
NEMA size	Max Hp	Fuse clip (amps)	Code	Max Hp	Fuse clip (amps)	Code	Max Hp	Fuse clip (amps)	Code	Max Hp	Fuse clip (amps)	Code
0	3	30	HA	3	30	HA	5	30	H3	5	30	H3
1	–	–	–	–	–	–	7½	30	H3	10	30	H3
	7½	60	HB	7½	60	HB	10	60	H6	–	60	H6
2	–	–	–	–	–	–	15	60	H6	20	60	H6
	10	100	HC	15	100	HC	25	100	H1	25	100	H1
3	–	–	–	–	–	–	30	100	H1	30	100	H1
	25	200	HD	30	200	HD	50	200	H2	50	200	H2
4	–	–	–	–	–	–	60	200	H2	60	200	H2
	40	400	HE	50	400	HE	100	400	H4	100	400	H4

CR415 magnetic starters

2 speed – 2 winding, nonfusible and fusible disconnect type

Part number configuration
Valid for NEMA sizes 0-4

Step 3 (digits 10, 11) select protective device (continued)

Disconnect with class R fuse clips — for use with time delay/dual element class RK1/RK5 fuses

	200–208 V			230–240 V			460–480 V			575–600 V		
NEMA size	Max Hp	Fuse clip (amps)	Code	Max Hp	Fuse clip (amps)	Code	Max Hp	Fuse clip (amps)	Code	Max Hp	Fuse clip (amps)	Code
0	3	30	RA	3	30	RA	5	30	R3	5	30	R3
1	5	30	RA	5	30	RA	10	30	R3	10	30	R3
	7½	60	RB	7½	60	RB	–	–	–	–	–	–
2		–	–	–	–	–	–	30	R3	15	30	R3
	10	60	RB	15	60	RB	25	60	R6	25	60	R6
3	–	–	–	–	–	–	–	60	R6	30	60	R6
	20	100	RC	25	100	RC	50	100	R1	50	100	R1
	25	200	RD	30	200	RD	–	–	–	–	–	–
4	–	–	–	–	–	–	–	100	R1	60	100	R1
	400	200	RD	50	200	RD	100	200	R2	100	200	R2

Disconnect with class J fuse clips — for use with time delay/dual element class J fuses

	200–208 V			230–240 V			460–480 V			575–600 V		
NEMA size	Max Hp	Fuse clip (amps)	Code	Max Hp	Fuse clip (amps)	Code	Max Hp	Fuse clip (amps)	Code	Max Hp	Fuse clip (amps)	Code
0	3	30	J3	3	30	J3	5	30	J3	5	30	J3
1	5	30	J3	5	30	J3	10	30	J3	10	30	J3
	7½	60	J6	7½	60	J6	–	–	–	–	–	–
2	–	–	–	–	–	–	–	30	J3	15	30	J3
	10	60	J6	15	60	J6	25	60	J6	25	60	J6
3	–							60	J6	30	60	J6
	20	100	J1	25	100	J1	50	100	J1	50	100	J1
4	25	200	J2	30	200	J2	–	–	–	–	–	–
	–	–	–	–	–	–	–	100	J1	60	100	J1
	40	200	J2	50	200	J2	100	200	J2	100	200	J2

Step 4 (digit 12) select overload relay

Overload relay	Code
Thermal bi-metallic ambient Compensated (1NC)	3
Thermal bi-metallic ambient compensated (1NO–1NC)	4
Solid state overload (1NO–1NC)	(#)

(#) Select code for solid state overload amp rating from ranges table on following page.

CR415 magnetic starters

2 speed – 2 winding, nonfusible and fusible disconnect type

Part number configuration
Valid for NEMA sizes 0-4

—

2-speed solid state overload ranges

						NEMA size
		0 and 1		2		3 and 4
Code	Hi Amp	Lo Amp	Hi Amp	Lo Amp	Hi Amp	Lo Amp
C	0.4–0.85	0.4–0.85	6.5–13.5	6.5–13.5	17–35	17–35
D	0.8–1.7	0.4–0.85	13–27	6.5–13.5	35–70	17–35
E	0.8–1.7	0.8–1.7	13–27	13–27	35–70	35–70
F	1.6–3.4	0.4–0.85	25–50	6.5 -13.5	65–135	17–35
G	1.6–3.4	0.8–1.7	25–50	13–27	65–135	35–70
H	1.6–3.4	1.6–3.4	25–50	25–50	65–135	65–135
U	3.2–6.8	0.8–1.7	-	-	-	-
K	3.2–6.8	1.6–3.4	-	-	-	-
L	3.2–6.8	3.2–6.8	-	-	-	-
M	6.5–13.5	1.6–3.4	-	-	-	-
V	6.5–13.5	3.2–6.8	-	-	-	-
W	6.5–13.5	6.5–13.5	-	-	-	-
R	13–27	3.2–6.8	-	-	-	-
S	13–27	6.5–13.5	-	-	-	-
T	13–27	13–27	-	-	-	-

—

Step 5 (digit 13) select auxiliary contacts

Aux contacts (per contactor)	Code
None	A
1NO	B
1NC	C
1NO–1NC	D[2]
2NO	E[2]
2NC	F[2]

[2]Not available on 2 speed — 2 winding sizes 0-1.

—

Step 6 (digit 14) select monitoring options

Device	Code
None	A
Phase failure relay with undervoltage protection (panel mounted) — 190–480 V (PFR w/UV)	C
Phase failure relay with undervoltage protection (panel mounted) — 575 V (PFR w/UV)	D
Phase failure relay — 208 V (PFR)	E[3]
Phase failure relay — 240 V (PFR)	F[3]
Phase failure relay — 480 V (PFR)	G[3]
Phase failure relay — 575 V (PFR)	H[3]
Elapsed time meter (120 V/60 Hz) wired across coil (ETM)	1[4]
ETM + PFR w/UV (190–480 V)	L[4]
ETM + PFR w/UV (575 V)	N[4]
ETM + PFR (208 V)	P[3,4]
ETM + PFR (240 V)	Q[3,4]
ETM + PFR (480 V)	R[3,4]
ETM + PFR (575 V)	S[3,4]

[3]Available for type 1 enclosure only.
[4]Requires 120 V control circuit voltage or CPT w/ 120 V secondary.

CR415 magnetic starters

2 speed – 2 winding, nonfusible and fusible disconnect type

Part number configuration
Valid for NEMA sizes 0-4

Step 7 (digit 15) select push button/selector switch

Push Button/Selector Switch - Heavy Duty	Code
None	A
Fast/slow/stop push button	J
High/low/off push button	K
High/low push button and HOA selector switch	L
Fast/slow push button and HOA selector switch	M
HOA and slow/fast selector switches	P
HOA and low/high selector switches	R
Slow-off-fast selector switch	T
Low-off-high selector switch	U
Fast-slow-off-auto selector switch	V
High-low-off-auto selector switch	W

Step 8 (digit 16) select pilot device

Pilot light (heavy duty CR104P style) type	Color — functionality	Code
None		A
LED lights	Red and amber across coils	2
	Red and green across coils	3
	Red and amber across coils and unwired green	5
Push-to-test lights	Red and amber across coils	S
	Red and green across coils	T
	Red and amber across coils and unwired green	Y

Step 9 (digit 17) select control options

Device	Code
None	A
1 relay, 2NO-2NC, 24/120 V coil — unwired	B[5]
2 relays, 24/120 V coil — unwired	C[5]
DIN rail — for customer use	D
12 point terminal strip — unwired (12 PT strip)	E
Space heater w/ NC contact	H[6]
1 relay + 12 PT strip	J[5]
2 relays + 12 PT strip	K[5]
DIN rail + 12 PT strip + space heater	L[6]
2 relays + 12 PT strip + space heater	M[5,6]
Time delay on relay, 24/120 V coil — unwired (TD)	N[5]
Time delay off relay, 24/120 V coil — unwired (TD)	P[5]
12 PT strip + TD ON	R[5]
12 PT strip + TD OFF	S[5]
12 PT strip + space heater + TD ON	T[5,6]
12 PT strip + space heater + TD OFF	U[5,6]

[5]Relay/timer coil voltage is equivalent to CPT secondary voltage. Requires minimum 100 extra VA CPT option.
[6]Maximum number of auxiliary contacts shall be reduced by 1.

General note:
On NEMA size 3 and 4 starters, if selecting factory installed and wired operator devices (push buttons, selector switches, and/or pilot lights) then control circuit fusing, a control power transformer, or 120 V separate sourced control is required when the protective device is rated greater than 100 amps.

CR414 magnetic starters

2 speed – 2 winding, thermal magnetic circuit breaker type

Part number configuration
Valid for NEMA sizes 0-4

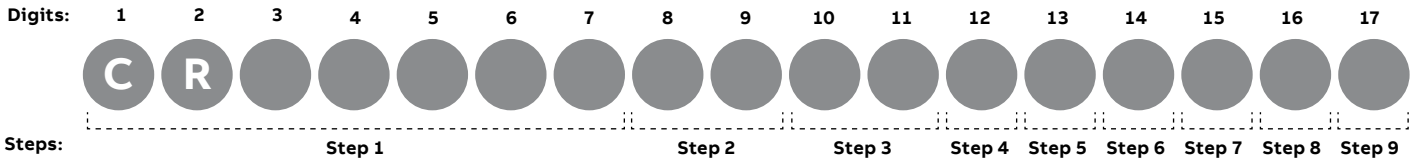

To configure the part number, use the tables below to fill in the digit boxes with the appropriate code.

Step 1 (digits 1-7) select NEMA size and enclosure

	NEMA type 1	NEMA type 3R	NEMA type 12	NEMA type 4
	Standard enclosure	Standard enclosure	Standard enclosure	Standard enclosure
NEMA size	CR	CR	CR	CR
0	414B1	414B6	414B2	414B4
1	414C1	414C6	414C2	414C4
2	414D1	414D6	414D2	414D4
3	414E1	414E6	414E2	414E4
4	414F1	414F6	414F2	414F4

Note: All enclosures include external overload reset buttons. NEMA 4 enclosures are stainless steel.

Step 2 (digits 8, 9) select control voltage (no CPT and standard size CPT)

Control circuit voltage and CPT	No CPT	Control fuses, no CPT	Standard size CPT
120 V w/ surge protector (SP)	01	F1	–
120 V	02	F2	–
240 V	03	F3	–
480 V	04	F4	–
600 V	05	F5	–
208 V	08	F8	–
24 V[1]	09	–	–
240 V/120 V w/CPT	–	–	93
480 V/120 V w/CPT	–	–	94
600 V/120 V w/CPT	–	–	95
208 V/120 V w/CPT	–	–	98
240 V/120 V w/CPT and SP	–	–	33
480 V/120 V w/CPT and SP	–	–	34
600 V/120 V w/CPT and SP	–	–	35
208 V/120 V w/CPT and SP	–	–	38
240 V/24 V w/CPT[1]	–	–	S3
480 V/24 V w/CPT[1]	–	–	S4
600 V/24 V w/CPT[1]	–	–	S5
208 V/24 V w/CPT[1]	–	–	S8

Note: CPT includes 2 primary fuses and 1 secondary fuse.
[1]24 V coils not available for NEMA size 3 and 4.

CR414 magnetic starters

2 speed – 2 winding, thermal magnetic circuit breaker type

Part number configuration
Valid for NEMA sizes 0-4

Step 2 (digits 8, 9) select control voltage (extra capacity CPT + 100 VA and 200 VA)

Control circuit voltage and CPT	Standard size CPT + 100 VA	Standard size CPT + 200 VA
120 V w/ surge protector (SP)	–	–
120 V	–	–
240 V	–	–
480 V	–	–
600 V	–	–
208 V	–	–
24 V[1]	–	–
240 V/120 V w/CPT	13	23
480 V/120 V w/CPT	14	24
600 V/120 V w/CPT	15	25
208 V/120 V w/CPT	18	28
240 V/120 V w/CPT and SP	53	63
480 V/120 V w/CPT and SP	54	64
600 V/120 V w/CPT and SP	55	65
208 V/120 V w/CPT and SP	58	68
240 V/24 V w/CPT[1]	A3	B3
480 V/24 V w/CPT[1]	A4	B4
600 V/24 V w/CPT[1]	A5	B5
208 V/24 V w/CPT[1]	A8	B8

Note: CPT includes 2 primary fuses and 1 secondary fuse.
[1]24 V coils not available for NEMA size 3 and 4.

Step 3 (digits 10, 11) select protective device

Thermal-mag circuit breaker — Spectra™series

	200–208 V			240 V			480 V			600 V		
NEMA size	Max Hp	CB rating (amps)	Code	Max Hp	CB rating (amps)	Code	Max Hp	CB rating (amps)	Code	Max Hp	CB rating (amps)	Code
0	2	15	TC	3	15	TC	5	15	TC	5	15	TC
	3	15	TC	–	–	–	–	–	–	–	–	–
1	–	–	–	–	–	–	–	–	–	7½	15	TC
	5	25	TE	5	25	TE	7½	25	TE	–	–	–
	–	–	–	–	–	–	–	–	–	10	25	TE
	7½	40	TG	7½	40	TG	10	25	TE	10	20	TD
2	–	–	–	–	–	–	15	40	TG	15	40	TG
	10	60	TJ	10	60	TJ	–	–	–	–	–	–
	–	–	–	–	–	–	–	–	–	20	40	TG
	–	–	–	15	60	TJ	20	60	TJ	–	–	–
	–	–	–	–	–	–	25	60	TJ	25	60	TJ
3	–	–	–	–	–	–	30	60	TJ	30	60	TJ
	15	100	TN	20	100	TN	–	–	–	–	–	–
	–	–	–	–	–	–	–	–	–	40	60	TJ
	20	100	TN	25	100	TN	40	100	TN	–	–	–
	–	–	–	–	–	–	50	100	TN	50	100	TN
	25	125	TQ	30	125	TQ	–	–	–	–	–	–
4	30	150	TR	–	–	–	60	150	TR	60	150	TR
	–	–	–	40	200	TT	–	–	–	–	–	–
	–	–	–	–	–	–	75	150	TR	75	150	TR
	40	200	TT	50	200	TT	–	–	–	–	–	–
	–	–	–	–	–	–	100	200	TT	100	200	TT

CR414 magnetic starters

2 speed – 2 winding, thermal magnetic circuit breaker type

Part number configuration
Valid for NEMA sizes 0-4

Step 4 (digit 12) select overload relay

Overload relay	Code
Thermal bi-metallic ambient compensated (1NC)	3
Thermal bi-metallic ambient compensated (1NO–1NC)	4
Solid state overload (1NO–1NC)	(#)

(#) Select code for solid state overload amp rating from ranges table below.

2-Speed solid state overload ranges

						NEMA size
		0 and 1		2		3 and 4
Code	Hi Amp	Lo Amp	Hi Amp	Lo Amp	Hi Amp	Lo Amp
C	0.4–0.85	0.4–0.85	6.5–13.5	6.5–13.5	17–35	17–35
D	0.8–1.7	0.4–0.85	13–27	6.5–13.5	35–70	17–35
E	0.8–1.7	0.8–1.7	13–27	13–27	35–70	35–70
F	1.6–3.4	0.4–0.85	25–50	6.5 -13.5	65–135	17–35
G	1.6–3.4	0.8–1.7	25–50	13–27	65–135	35–70
H	1.6–3.4	1.6–3.4	25–50	25–50	65–135	65–135
U	3.2–6.8	0.8–1.7	–	–	–	–
K	3.2–6.8	1.6–3.4	–	–	–	–
L	3.2–6.8	3.2–6.8	–	–	–	–
M	6.5–13.5	1.6–3.4	–	–	–	–
V	6.5–13.5	3.2–6.8	–	–	–	–
W	6.5–13.5	6.5–13.5	–	–	–	–
R	13–27	3.2–6.8	–	–	–	–
S	13–27	6.5–13.5	–	–	–	–
T	13–27	13–27	–	–	–	–

Step 5 (digit 13) select auxiliary contacts

Aux contacts (per contactor)	Code
None	A
1NO	B
1NC	C
1NO–1NC	D[2]
2NO	E[2]
2NC	F[2]

[2]Not available on 2 speed — 2 winding sizes 0-1.

Step 6 (digit 14) select monitoring options

Device	Code
None	A
Phase failure relay with undervoltage protection (panel mounted) — 190–480 V (PFR w/UV)	C
Phase failure relay with undervoltage protection (panel mounted) — 575 V (PFR w/UV)	D
Phase failure relay — 208 V (PFR)	E[3]
Phase failure relay — 240 V (PFR)	F[3]
Phase failure relay — 480 V (PFR)	G[3]
Phase failure relay — 575 V (PFR)	H[3]
Elapsed time meter (120 V/60 Hz) wired across coil (ETM)	1[4]
ETM + PFR w/UV (190-480V)	L[4]
ETM + PFR w/UV (575 V)	N[4]
ETM + PFR (208 V)	P[3,4]
ETM + PFR (240 V)	Q[3,4]
ETM + PFR (480 V)	R[3,4]
ETM + PFR (575 V)	S[3,4]

[3]Available for type 1 enclosure only.
[4]Requires 120 V control circuit voltage or CPT w/ 120 V secondary.

CR414 magnetic starters

2 speed – 2 winding, thermal magnetic circuit breaker type

Part number configuration
Valid for NEMA sizes 0-4

—

Step 7 (digit 15) select push button/selector switch

Push button/selector switch — heavy duty	Code
None	A
Fast/slow/stop push button	J
High/low/off push button	K
High/low push button and HOA selector switch	L
Fast/slow push button and HOA selector switch	M
HOA and slow/fast selector switches	P
HOA and low/high selector switches	R
Slow-off-fast selector switch	T
Low-off-high selector switch	U
Fast-slow-off-auto selector switch	V
High-low-off-auto selector switch	W

—

Step 8 (digit 16) select pilot device

Pilot light (heavy duty CR104P style) type	Color — functionality	Code
None		A
LED lights	Red and amber across coils	2
	Red and green across coils	3
	Red and amber across coils and unwired green	5
Push-to-test lights	Red and amber across coils	S
	Red and green across coils	T
	Red and amber across coils and unwired green	Y

—

Step 9 (digit 17) select control options

Device	Code
None	A
1 relay, 2NO-2NC, 24/120 V coil — unwired	B[5]
2 relays, 24/120 V coil — unwired	C[5]
DIN rail — for customer use	D
12 point terminal strip — unwired (12 PT strip)	E
Space heater w/ NC contact	H[6]
1 relay + 12 PT strip	J[5]
2 relays + 12 PT strip	K[5]
DIN rail + 12 PT strip + space heater	L[6]
2 relays + 12 PT strip + space heater	M[5,6]
Time delay on relay, 24/120 V coil — unwired (TD)	N[5]
Time delay off relay, 24/120 V coil — unwired (TD)	P[5]
12 PT strip + TD ON	R[5]
12 PT strip + TD OFF	S[5]
12 PT strip + space heater + TD ON	T[5,6]
12 PT strip + space heater + TD OFF	U[5,6]

[5]Relay/timer coil voltage is equivalent to CPT secondary voltage. Requires minimum 100 extra VA CPT option.
[6]Maximum number of auxiliary contacts shall be reduced by 1.

General note:
On NEMA size 3 and 4 starters, if selecting factory installed and wired operator devices (push buttons, selector switches, and/or pilot lights) then control circuit fusing, a control power transformer, or 120 V separate sourced control is required when the protective device is rated greater than 100 amps.

CR494 mag-break magnetic starters

2 speed – 2 winding, mag-break circuit breaker type

Part number configuration
Valid for NEMA sizes 0-4

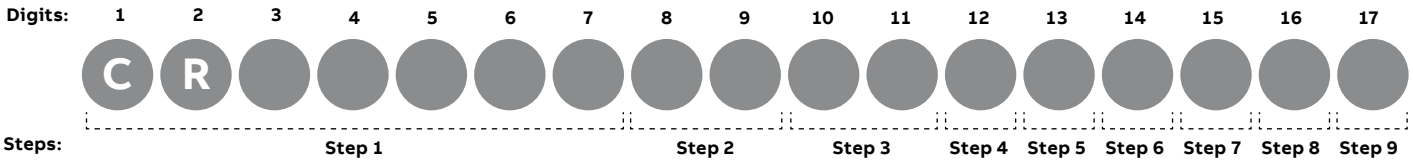

To configure the part number, use the tables below to fill in the digit boxes with the appropriate code.

Step 1 (digits 1-7) select NEMA size and enclosure

	NEMA type 1	NEMA type 3R	NEMA type 12	NEMA type 4
	Standard enclosure	Standard enclosure	Standard enclosure	Standard enclosure
NEMA size	CR	CR	CR	CR
0	494B1	494B6	494B2	494B4
1	494C1	494C6	494C2	494C4
2	494D1	494D6	494D2	494D4
3	494E1	494E6	494E2	494E4
4	494F1	494F6	494F2	494F4

Note: All enclosures include external overload reset buttons. NEMA 4 enclosures are stainless steel.

Step 2 (digits 8, 9) select control voltage (no CPT and standard size CPT)

Control circuit voltage and CPT	No CPT	Control fuses, no CPT	Standard size CPT
120 V w/ surge protector (SP)	01	F1	–
120 V	02	F2	–
240 V	03	F3	–
480 V	04	F4	–
600 V	05	F5	–
208 V	08	F8	–
24 V[1]	09	–	–
240 V/120 V w/CPT	–	–	93
480 V/120 V w/CPT	–	–	94
600 V/120 V w/CPT	–	–	95
208 V/120 V w/CPT	–	–	98
240 V/120 V w/CPT and SP	–	–	33
480 V/120 V w/CPT and SP	–	–	34
600 V/120 V w/CPT and SP	–	–	35
208 V/120 V w/CPT and SP	–	–	38
240 V/24 V w/CPT[1]	–	–	S3
480 V/24 V w/CPT[1]	–	–	S4
600 V/24 V w/CPT[1]	–	–	S5
208 V/24 V w/CPT[1]	–	–	S8

Note: CPT includes 2 primary fuses and 1 secondary fuse.
[1]24 V coils not available for NEMA size 3 and 4.

CR494 mag-break magnetic starters

2 speed – 2 winding, mag-break circuit breaker type

Part number configuration
Valid for NEMA sizes 0-4

Step 2 (digits 8, 9) select control voltage (extra capacity CPT + 100 VA and 200 VA)

Control circuit voltage and CPT	Standard size CPT + 100 VA	Standard size CPT + 200 VA
120 V w/ surge protector (SP)	–	–
120 V	–	–
240 V	–	–
480 V	–	–
600 V	–	–
208 V	–	–
24 V[1]	–	–
240 V/120 V w/CPT	13	23
480 V/120 V w/CPT	14	24
600 V/120 V w/CPT	15	25
208 V/120 V w/CPT	18	28
240 V/120 V w/CPT and SP	53	63
480 V/120 V w/CPT and SP	54	64
600 V/120 V w/CPT and SP	55	65
208 V/120 V w/CPT and SP	58	68
240 V/24 V w/CPT[1]	A3	B3
480 V/24 V w/CPT[1]	A4	B4
600 V/24 V w/CPT[1]	A5	B5
208 V/24 V w/CPT[1]	A8	B8

Note: CPT includes 2 primary fuses and 1 secondary fuse.
[1]24 V coils not available for NEMA size 3 and 4.

Step 3 (digits 10, 11) select protective device

Mag-break circuit breaker — Spectra™ series

	208 V			240 V			480 V			600 V		
NEMA size	Max Hp	CB rating (amps)	Code	Max Hp	CB rating (amps)	Code	Max Hp	CB rating (amps)	Code	Max Hp	CB rating (amps)	Code
0	0.5	3	MA	0.5	3	MA	1	3	MA	1	3	MA
	1	7	MB	–	–	–	–	–	–	–	–	–
	–	–	–	–	–	–	3	7	MB	3	7	MB
	3	15	MC	1	7	MB	–	–	–	–	–	–
	–	–	–	3	15	MC	5	15	MC	5	15	MC
1	5	25	ME	5	25	ME	7½	25	ME	10	25	ME
	–	–	–	–	–	–	10	25	ME	–	–	–
	7½	40	MG	7½	40	MG	–	–	–	–	–	–
2	–	–	–	–	–	–	15	40	MG	15	40	MG
	10	60	MJ	10	60	MJ	–	–	–	–	–	–
	–	–	–	–	–	–	–	–	–	–	–	–
	–	–	–	–	–	–	–	–	–	20	40	MG
	–	–	–	15	60	MJ	20	60	MJ	–	–	–
	–	–	–	–	–	–	25	60	MJ	25	60	MJ
3	–	–	–	–	–	–	30	60	MJ	30	60	MJ
	15	100	MN	20	100	MN	–	–	–	–	–	–
	–	–	–	–	–	–	–	–	–	40	60	MJ
	20	100	MN	25	100	MN	40	100	MN	–	–	–
	25	100	MN	30	100	MN	50	100	MN	50	100	MN
4	30	150	MR	–	–	–	60	100	MN	60	100	MN
	–	–	–	40	175	MS	–	–	–	–	–	–
	–	–	–	–	–	–	75	150	MR	75	150	MR
	–	–	–	–	–	–	–	–	–	100	150	MR
	40	175	MS	50	175	MS	100	175	MS	–	–	–

CR494 mag-break magnetic starters

2 speed – 2 winding, mag-break circuit breaker type

Part number configuration
Valid for NEMA sizes 0-4

Step 4 (digit 12) select overload relay

Overload relay	Code
Thermal bi-metallic ambient compensated (1NC)	3
Thermal bi-metallic ambient compensated (1NO–1NC)	4
Solid state overload (1NO–1NC)	(#)

(#) Select code for solid state overload amp rating from ranges table below.

2-speed solid state overload ranges

						NEMA size
		0 and 1		2		3 and 4
Code	Hi Amp	Lo Amp	Hi Amp	Lo Amp	Hi Amp	Lo Amp
C	0.4–0.85	0.4–0.85	6.5–13.5	6.5–13.5	17–35	17–35
D	0.8–1.7	0.4–0.85	13–27	6.5–13.5	35–70	17–35
E	0.8–1.7	0.8–1.7	13–27	13–27	35–70	35–70
F	1.6–3.4	0.4–0.85	25–50	6.5 -13.5	65–135	17–35
G	1.6–3.4	0.8–1.7	25–50	13–27	65–135	35–70
H	1.6–3.4	1.6–3.4	25–50	25–50	65–135	65–135
U	3.2–6.8	0.8–1.7	–	–	–	–
K	3.2–6.8	1.6–3.4	–	–	–	–
L	3.2–6.8	3.2–6.8	–	–	–	–
M	6.5–13.5	1.6–3.4	–	–	–	–
V	6.5–13.5	3.2–6.8	–	–	–	–
W	6.5–13.5	6.5–13.5	–	–	–	–
R	13–27	3.2–6.8	–	–	–	–
S	13–27	6.5–13.5	–	–	–	–
T	13–27	13–27	–	–	–	–

Step 5 (digit 13) select auxiliary contacts

Aux contacts (per contactor)	Code
None	A
1NO	B
1NC	C
1NO–1NC	D[2]
2NO	E[2]
2NC	F[2]

[2]Not available on 2 speed – 2 winding sizes 0-1.

Step 6 (digit 14) select monitoring options

Device	Code
None	A
Phase failure relay with undervoltage protection (panel mounted) — 190≠480 V (PFR w/UV)	C
Phase failure relay with undervoltage protection (panel mounted) — 575 V (PFR w/UV)	D
Phase failure relay — 208 V (PFR)	E[3]
Phase failure relay — 240 V (PFR)	F[3]
Phase failure relay — 480 V (PFR)	G[3]
Phase failure relay — 575 V (PFR)	H[3]
Elapsed time meter (120 V/60 Hz) wired across coil (ETM)	1[4]
ETM + PFR w/UV (190–480 V)	L[4]
ETM + PFR w/UV (575 V)	N[4]
ETM + PFR (208 V)	P[3,4]
ETM + PFR (240 V)	Q[3,4]
ETM + PFR (480 V)	R[3,4]
ETM + PFR (575 V)	S[3,4]

[3]Available for type 1 enclosure only.
[4]Requires 120 V control circuit voltage or CPT w/ 120 V secondary.

CR494 mag-break magnetic starters

2 speed – 2 winding, mag-break circuit breaker type

Part number configuration
Valid for NEMA sizes 0-4

—

Step 7 (digit 15) select push button/selector switch

Push button/selector switch — heavy duty	Code
None	A
Fast/slow/stop push button	J
High/low/off push button	K
High/low push button and HOA selector switch	L
Fast/slow push button and HOA selector switch	M
HOA and slow/fast selector switches	P
HOA and low/high selector switches	R
Slow-off-fast selector switch	T
Low-off-high selector switch	U
Fast-slow-off-auto selector switch	V
High-low-off-auto selector switch	W

—

Step 8 (digit 16) select pilot device

Pilot light (heavy duty CR104P style) type	Color — functionality	Code
None		A
LED lights	Red and amber across coils	2
	Red and green across coils	3
	Red and amber across coils and unwired green	5
Push-to-test lights	Red and amber across coils	S
	Red and green across coils	T
	Red and amber across coils and unwired green	Y

—

Step 9 (digit 17) select control options

Device	Code
None	A
1 relay, 2NO-2NC, 24/120 V coil - unwired	B[5]
2 relays, 24/120 V coil - unwired	C[5]
DIN rail - for customer use	D
12 point terminal strip - unwired (12 PT strip)	E
Space heater w/ NC contact	H[6]
1 relay + 12 PT strip	J[5]
2 relays + 12 PT strip	K[5]
DIN rail + 12 PT strip + space heater	L[6]
2 relays + 12 PT strip + space heater	M[5,6]
Time delay on relay, 24/120 V coil - unwired (TD)	N[5]
Time delay off relay, 24/120 V coil - unwired (TD)	P[5]
12 PT strip + TD ON	R[5]
12 PT strip + TD OFF	S[5]
12 PT strip + space heater + TD ON	T[5,6]
12 PT strip + space heater + TD OFF	U[5,6]

[5]Relay/timer coil voltage is equivalent to CPT secondary voltage. Requires minimum 100 extra VA CPT option.
[6]Maximum number of auxiliary contacts shall be reduced by 1.

General note:
If selecting factory installed and wired operator devices (push buttons, selector switches, and/or pilot lights) control circuit fusing, a control power transformer, or 24 V/120 V separate sourced control is required, regardless of protective device rating.

CR412, CR413, CR492, CR414, CR415, CR494 magnetic starters

2 speed, combination, NEMA type 1, 3R, 12, 4/4X

100 horsepower maximum
NEMA sizes 0-4
600 volts maximum 50/60 Hz

NEMA type 1 enclosure
(Enclosure code = 1)

NEMA size	A	B	C	D	E	F	G	H (dia)	J (dia)	K (dia)
0–2	19.78 (502.4)	33.32 (846.3)	8.14 (206.7)	3.56 (90.4)	1.89 (48.0)	8.00 (203.2)	32.44 (824.0)	0.34 (8.7)	0.41 (10.3)	0.81 (20.6)
3–4	23.00 (584.2)	53.82 (1367)	8.14 (206.7)	3.73 (94.6)	3.39 (86.1)	8.00 (203.2)	52.94 (1344.7)	0.34 (8.7)	0.41 (10.3)	0.81 (20.6)

NEMA type 3R/12 enclosure
(Enclosure code = 6 or 2)

NEMA size	A	B	C	D	E	F	G	H (dia)	J (dia)	K (dia)
0–2	20.00 (508.0)	33.25 (844.6)	8.20 (208.2)	3.48 (88.5)	1.91 (48.5)	8.00 (203.2)	32.13 (816.0)	0.34 (8.7)	0.41 (10.3)	0.81 (20.6)
3–4	23.00 (584.2)	53.82 (1367.0)	8.20 (208.2)	3.50 (88.8)	3.41 (86.6)	8.00 (203.2)	52.70 (1338.5)	0.34 (8.7)	0.41 (10.3)	0.81 (20.6)

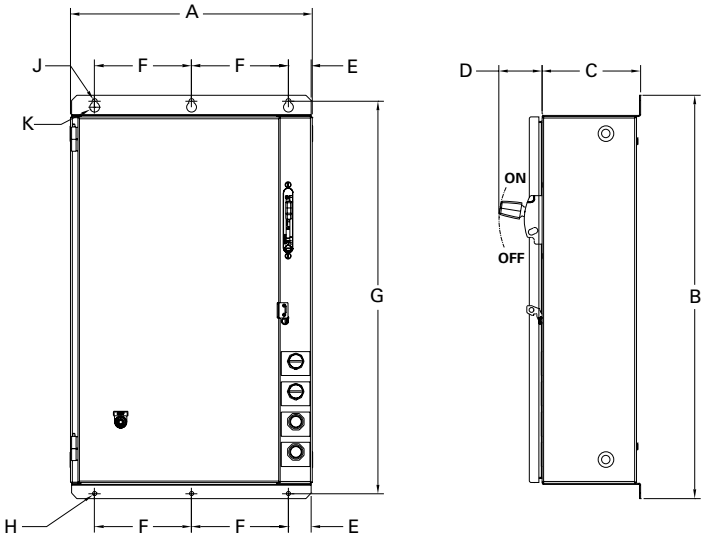

Outlines, dimensions (in. / mm) and weights (for estimating only)

CR412, CR413, CR492, CR414, CR415, CR494 magnetic starters

2 speed, combination, NEMA type 1, 3R, 12, 4/4X

100 horsepower maximum
NEMA sizes 0-4
600 volts maximum 50/60 Hz

NEMA type 4/4X enclosure
(Enclosure code = 4)

NEMA size	A	B	C	D	E	F	G	H (dia)	J (dia)	K (dia)
0-2	20.00 (508.0)	33.32 (846.3)	8.14 (206.7)	3.72 (94.6)	1.91 (48.5)	8.00 (203.2)	32.20 (817.8)	0.34 (8.7)	0.41 (10.3)	0.81 (20.6)
3-4	23.00 (584.2)	53.76 (1365.5)	8.14 (206.7)	3.55 (90.2)	3.41 (86.6)	8.00 (203.2)	52.64 (1336.9)	0.34 (8.7)	0.41 (10.3)	0.81 (20.6)

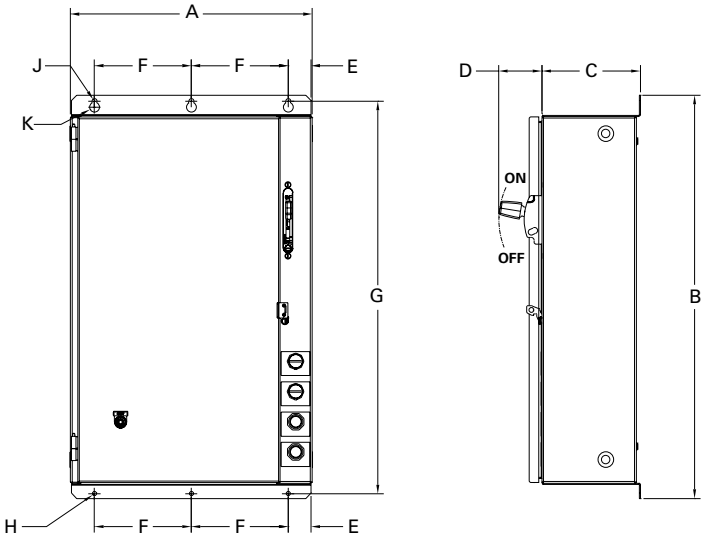

Outlines, dimensions (in. / mm) and weights (for estimating only)

CR306, CR307, CR308, CR309, CR310, CR311, CR387, CR390, CR407, CR408, CR410, CR411, CR487, CR490 magnetic starters

Factory-installed modifications

NEMA sizes 0-6

Starter modifications—factory installed

Factory-installed modifications are available for those starters as indicated in the tables. For field modification kits, see pages 114 –121. Supplying combinations of these items may affect standard enclosure dimensions and type of construction. In extreme instances, it may not be possible to furnish all of them within the limitations of a starter design.

Type of installation/starters	Item no.	Modifications	Enclosure type
Pilot devices mounted in cover or flange of CR306, CR307, CR308, CR387, CR407, CR408, CR487	1	Push buttons	–
	1a	Start-stop[1]	1
	1b	Off-on[1]	1
	1c	Push buttons start-stop[1] off-on[1]	Any
	1d	Start push button and H-O-A selector switch (heavy-duty, CR104P)	Any
	1e	Single push button, unwired (specify marking) (heavy-duty, CR104P)	1
		Single push button, unwired (specify marking) (heavy-duty, CR104P)	Any
	1f	Single illuminated push button, unwired (specify marking) (heavy-duty, CR104P)	Any
	2	Selector switches	–
	2a	H and-off-auto[1,2]	1
		H and-off-auto[1,2] (heavy-duty, CR104P)	Any
	2b	Off-on[1]	1
		Off-on (heavy-duty, CR104P)	Any
	2c	Single selector switch maintained (specify marking)	–
		Two- or three-position (specify position)[3] (heavy-duty, CR104P)	Any
		Four-position[3] (heavy-duty, CR104P)	Any
	2d	Key operated maintained (specify marking and key-removal position)	–
		Two- or three-position[3] (heavy-duty, CR104P)	Any
	3	Nonstandard markings (specify)	Any

[1]Factory-installed modification kit for sizes 00-5.
[2]This modification not available with items 1a, 1b or 1c because STOP push button would not work in auto position; instead order modification 1d.
[3]Specify CR104 operator and contact block by product number.

Control circuit fusing

Per the NEC and UL508 Section 18.2 — control circuit fuses must be used when the branch circuit protective device rating is too large to serve as protection for the control circuit. This depends on the control wire size and whether all control circuit wires are within the enclosure. See table below:

Provide supplemental control circuit protection if control circuits with wires longer than 12 inches are connected to branch circuit protection exceeding the ratings below

	Maximum branch circuit protection rating (amperes)		
Control circuit wire size (AWG)	Conductors within enclosure	Conductors outside enclosure	Maximum supplemental control circuit protection rating (amperes)
22	12	3	3
20	20	5	5
18	25	7	7
16	40	10	10
14	100	45	20
12	120	60	25

The factory must provide this protection, if the circuit provided by the factory requires the fuses. The factory will provide control circuit fuses in enclosed starters and contactors with pilot devices, control relays or other control components that are factory wired; when used with line voltage control; when the size listed below is being supplied.

Non-combination starters (CR305, CR306, CR309, CR385, CR386)

- Size 4 and above

Combination starters

- Size 0-3 with mag-break protector size 3 with:
  - Circuit breaker greater than 100 amps, or
  - Fuse clips greater than 100 amps, or size 4 and above with any circuit breakers, circuit protector or fuse clips.

Control circuit fuses (modification 9) must be added to the enclosed starter or contactor pricing.

All CPTs will be supplied with primary fuses. CPTs without primary fuses are no longer available. When control circuit fuses are not factory supplied, customer provided wiring or branch circuit protection sizing to these contactors and starters may still require that the customer/installer add the fusing in the field. It will be the customer/installer's responsibility to ensure code compliance under these conditions.

CR306, CR307, CR308, CR309, CR310, CR311, CR387, CR390, CR407, CR408, CR410, CR411, CR487, CR490 magnetic starters

Factory-installed modifications

Starter modifications—factory installed

The general information at the top of page 114, regarding factory-installed modifications, also applies to those listed in the table below.

Type of installation/starters	Item no.	Modifications	Enclosure type
Pilot devices mounted in cover or flange of CR306, CR307, CR308, CR387, CR407, CR408, CR487	4	Indicating light[1]	–
	4a	One (red only)[2]	1
	4b	One (specify red or green) (heavy-duty, CR104P)	Any
	4c	Two (includes 1 NC auxiliary contact)[3] (heavy-duty, CR104P)	Any
	4d	One push-to-test and/or transformer type (red or green)	Any
	4e	two push-to-test (includes 1 NC auxiliary contact) and/or transformer type[3]	Any
Pilot devices mounted in cover or flange of CR309, CR310, CR311, CR390, CR410, CR411, CR490	5	Push buttons	–
	5a	Forward-stop-reverse	Any
	5b	High-low-off	Any
	5c	Fast-slow-stop	Any
	5d	High-low push button and H-O-A selector switch	Any
	5e	Single push button, unwired (specify marking)[4]	Any
	5f	Single illuminated push button, unwired (specify marking)[4]	Any
	6	Selector switches	–
	6a	Low-off-high	Any
	6b	Slow-off-fast	Any
	6c	Forward-off-reverse	Any
	6d	Low-high and H and-off-auto	Any
	6e	H and-off-auto	Any
	6f	Single selector switch maintained (specify marking and positions)	–
		(Specify two or three positions)[4]	Any
	6g	Key operated maintained (specify marking and key-removal positions)	
		(Specify two or three positions)[4]	Any
	6h	Nonstandard markings	Any

Note: For indicating light modifications on CR309-311 and CR390, see page 114.
[1]One indicating light: Wired in parallel with operating coil. Two indicating lights : Red is wired in parallel with operating coil, green is wired through an auxiliary contact.
[2]Factory-installed field modification kit for sizes 00-4 and size 5 without CPT.
[3]Maximum of three additional auxiliary contacts available on size 0-1.
[4]Specify CR104P operator and contact block by product number.

Control circuit fusing

Per the NEC and UL508 Section 18.2 — control circuit fuses must be used when the branch circuit protective device rating is too large to serve as protection for the control circuit. This depends on the control wire size and whether all control circuit wires are within the enclosure. See table below:

Provide supplemental control circuit protection if control circuits with wires longer than 12 inches are connected to branch circuit protection exceeding the ratings below

	Maximum branch circuit protection rating (amperes)		
Control circuit wire size (AWG)	Conductors within enclosure	Conductors outside enclosure	Maximum supplemental control circuit protection rating (amperes)
22	12	3	3
20	20	5	5
18	25	7	7
16	40	10	10
14	100	45	20
12	120	60	25

The factory must provide this protection, if the circuit provided by the factory requires the fuses. The factory will provide control circuit fuses in enclosed starters and contactors with pilot devices, control relays or other control components that are factory wired; when used with line voltage control; when the size listed below is being supplied.

Non-combination starters (CR305, CR306, CR309, CR385, CR386)

- Size 4 and above

Combination starters

- Size 0-3 with mag-break protector size 3 with:
  - Circuit breaker greater than 100 amps, or
  - Fuse clips greater than 100 amps, or size 4 and above with any circuit breakers, circuit protector or fuse clips.

Control circuit fuses (modification 9) must be added to the enclosed starter or contactor pricing.

All CPTs will be supplied with primary fuses. CPTs without primary fuses are no longer available. When control circuit fuses are not factory supplied, customer provided wiring or branch circuit protection sizing to these contactors and starters may still require that the customer/installer add the fusing in the field. It will be the customer/installer's responsibility to ensure code compliance under these conditions.

CR306, CR307, CR308, CR309, CR310, CR311, CR387, CR390, CR407, CR408, CR410, CR411, CR487, CR490 magnetic starters

Factory-installed modifications

Starter modifications—factory installed

The general information at the top of page 114, regarding factory-installed modifications, also applies to those listed in the table below.

Type of installation/starters	Item no.	Modifications	Enclosure type
Pilot devices mounted in cover or flange of CR309, CR410, CR411, CR490	7	Indicating lights (specify color)[1]	–
	7a	Two	Any
	7b	Three	Any
	7c	Two push-to-test	Any
	7d	Three push-to-test	Any
Control circuit in CR306, CR307, CR308, CR309, CR310, CR311, CR387, CR390, CR407, CR408, CR410, CR411, CR487, CR490	8	Separate control circuit (specify voltage and frequency, reference items 13a and 13b for standard voltages)	Any
	9	Fused control circuit—two fuses	Any
	10	Control transformer—standard capacity, 50 or 60 Hz[2] two primary and one fuse secondary, (specify voltage rating) standard voltages at 60 Hz: 220–230–240 primary, 110–115–120 secondary 440–460–480 primary, 110–115–120 secondary 550–575–600 primary, 110–115–120 secondary 200–208 primary, 115–120 secondary	Any
	11	Control transformer — 100 VA additional capacity, 60 Hz	Any
	12	–	
	13	Operating coil	
	13a[4]	Standard voltages at 60 Hz: 24, 115–120, 200–208, 230–240, 460–480, 575–600	Any
	13b	Standard voltages at 50 Hz: 110, 220, 380-415, 440, 550	Any
	13d[3]	DC—standard voltages: 24, 115–125	Any

[1]Two indicating lights have each one wired in parallel with each operating coil. (Both red or red/amber or red/green.) Three lights have one wired in parallel with each operating coil with the third one wired through two normally closed auxiliary contacts. (Both red or red/amber, with green "OFF.")
[2]The National Electrical Code, Article 450-3(B), requires primary fuses in most typical installations. Refer to the NEC, Article 450 prior to ordering control transformer without primary fuses to ensure compliance. Control circuit fuse kits from page 128 may be used to provide primary fusing. Fuses must be sized to meet the requirements of the NEC according to the "Recommended Fuse" table.
[3]Available in CR305 contactor forms.
[4]24 V coil not available on size 5 and 6.

Control circuit fusing

Per the NEC and UL508 Section 18.2 — control circuit fuses must be used when the branch circuit protective device rating is too large to serve as protection for the control circuit. This depends on the control wire size and whether all control circuit wires are within the enclosure. See table below:

Provide supplemental control circuit protection if control circuits with wires longer than 12 inches are connected to branch circuit protection exceeding the ratings below

Control circuit wire size (AWG)	Maximum branch circuit protection rating (amperes): Conductors within enclosure	Maximum branch circuit protection rating (amperes): Conductors outside enclosure	Maximum supplemental control circuit protection rating (amperes)
22	12	3	3
20	20	5	5
18	25	7	7
16	40	10	10
14	100	45	20
12	120	60	25

The factory must provide this protection, if the circuit provided by the factory requires the fuses. The factory will provide control circuit fuses in enclosed starters and contactors with pilot devices, control relays or other control components that are factory wired; when used with line voltage control; when the size listed below is being supplied.

Recommended fuse

CPT VA	Primary voltage 208/240	480	600
50	1	0.5	0.5
100	2	1	0.75
150	3	1.5	1
250	5	2	2
300	6	3	2

Non-combination starters (CR305, CR306, CR309, CR385, CR386)
- Size 4 and above

Combination starters
- Size 0-3 with mag-break protector size 3 with:
  - Circuit breaker greater than 100 amps, or
  - Fuse clips greater than 100 amps, or size 4 and above with any circuit breakers, circuit protector or fuse clips.

Control circuit fuses (modification 9) must be added to the enclosed starter or contactor pricing.

All CPTs will be supplied with primary fuses. CPTs without primary fuses are no longer available. When control circuit fuses are not factory supplied, customer provided wiring or branch circuit protection sizing to these contactors and starters may still require that the customer/installer add the fusing in the field. It will be the customer/installer's responsibility to ensure code compliance under these conditions.

CR306, CR307, CR308, CR309, CR310, CR311, CR387, CR390, CR407, CR408, CR410, CR411, CR487, CR490 MAGNETIC STARTERS

Factory-installed modifications

Starter modifications—factory installed

The general information at the top of page 114, regarding factory-installed modifications, also applies to those listed in the table below.

Type of installation/starters	Item no.	Modifications	Enclosure type
Auxiliary relays mounted in CR306, CR307, CR308, CR387, CR407, CR408, CR487	14[1]	Control relay, four-pole (convertible) unwired (specify coil voltage)	1, 3R, 12
			4/4X
	15[1]	Time-delay relay, unwired, pneumatic—1 to 60 seconds, 1 NO-1 NC Specify TDD or TDE and coil voltage)[2]	1, 3R, 12
			4/4X
	16[1]	Timing relay, motor driven, unwired specify voltage and timing range)[2]	Any
	17[1]	Phase loss, phase reversal, three-phase, undervoltage relay (starting and running protection, specify voltage)	Any
Auxiliary relays mounted in CR309,CR310, CR311,CR390, CR410, CR411, CR490	18	Two-speed controllers	–
	18a	Compelling relay (forces low-speed start)[2]	Any
	18b	Accelerating or decelerating, timing relay (imposes time-delay between speed change)[2]	Any
Auxiliary contacts mounted in CR306,CR307, CR308,CR309, CR310,CR311, CR387,CR390, CR407, CR408, CR410, CR411, CR487, CR490	19	Magnetic contactor or starter (specify number of NO or NC) — Single speed, nonreversing: Four maximum, sizes 0, 1 Five maximum, size 2-6 Reversers and two-speed, two winding: Two maximum, per contactor, sizes 0-6 Two-speed, one winding: One on left contactor, two on right Contactor, size 0, 1 Two maximum per contactor, sizes 2-6	Any
Auxiliary contacts on operator handle	20	Disconnect switch	–
	20a	One normally open or one normally closed (specify)	1, 3R, 4/4X, 12
	20b	Single pole double throw	1, 3R, 4/4X, 12
	21	Circuit breaker	–
	21a	One normally open or one normally closed (specify)	1, 3R, 4/4X, 12
	21b	Single pole double throw	1, 3R, 4/4X, 12

[1]NEMA Type 1 enclosures require oiltight pilot devices when this modification is used with NEMA starter sizes 0, 1, and 2. Only oiltight pilot devices will fit the oversized enclosure required. The list price addition for the oversized enclosure is already included in the published list price.
[2]Requires 100 VA extra capacity control transformer.

Control circuit fusing

Per the NEC and UL508 Section 18.2 - control circuit fuses must be used when the branch circuit protective device rating is too large to serve as protection for the control circuit. This depends on the control wire size and whether all control circuit wires are within the enclosure. See table below:

Provide supplemental control circuit protection if control circuits with wires longer than 12 inches are connected to branch circuit protection exceeding the ratings below

Control circuit wire size (AWG)	Maximum branch circuit protection rating (amperes)		Maximum supplemental control circuit protection rating (amperes)
	Conductors within enclosure	Conductors outside enclosure	
22	12	3	3
20	20	5	5
18	25	7	7
16	40	10	10
14	100	45	20
12	120	60	25

The factory must provide this protection, if the circuit provided by the factory requires the fuses. The factory will provide control circuit fuses in enclosed starters and contactors with pilot devices, control relays or other control components that are factory wired; when used with line voltage control; when the size listed below is being supplied.

Non-combination starters (CR305, CR306, CR309, CR385, CR386)

- Size 4 and above

Combination starters

- Size 0-3 with mag-break protector size 3 with:
  - Circuit breaker greater than 100 amps, or
  - Fuse clips greater than 100 amps, or size 4 and above with any circuit breakers, circuit protector or fuse clips.

Control circuit fuses (modification 9) must be added to the enclosed starter or contactor pricing.

All CPTs will be supplied with primary fuses. CPTs without primary fuses are no longer available. When control circuit fuses are not factory supplied, customer provided wiring or branch circuit protection sizing to these contactors and starters may still require that the customer/installer add the fusing in the field. It will be the customer/installer's responsibility to ensure code compliance under these conditions.

CR306, CR307, CR308, CR309, CR310, CR311, CR387, CR390, CR407, CR408, CR410, CR411, CR487, CR490 magnetic starters

Factory-installed modifications

Starter modifications—factory installed

The general information at the top of page 114, regarding factory-installed modifications, also applies to those listed in the table below.

Type of installation/starters	Item no.	Modifications	Enclosure type
Over load relay mounted on CR306, CR307, CR308, CR309, CR310, CR311, CR387, CR390, CR407, CR408, CR410, CR411, CR487, CR490	22a	1 NC contact, manual reset (standard)	Any
	22b	1 NO and 1 NC isolated contact	Any
	22c	Ambient compensated (1 NC contact)	Any
	23	Automatic reset	Any
	24	Omit the overload	Any
	25	Solid-state overload[1]	Any
Metering mounted in CR306, CR307, CR308, CR309, CR310, CR311, CR387, CR390, CR407, CR408, CR410, CR411, CR487, CR490	27	Elapsed time meter	1, 3R, 12 4/4X
Fuse clips mounted in CR308, CR311, CR408, CR411	28	Class H (standard)	Any
		Class J	Any
		Class R	Any
Enclosure CR306, CR307, CR308, CR309, CR310, CR311, CR387, CR390, CR407, CR408, CR410, CR411, CR487, CR490	30	Space heater[2] 50 Watts—NEMA size 0-4 contactor/starter 100 Watts—NEMA size 5 contactor/starter	Any
Misc. mounted on CR306, CR307, CR308, CR309, CR310, CR311, CR387, CR390, CR407, CR408, CR410, CR411, CR487, CR490	31	Operating coil surge suppressor (120 V/60 Hz)	Any
	32	Insulated neutral lug	Any
	33	Ground lug	Any
	34	Terminal block, (catalog number CR151B) 30 A, unwired (per point) (specify points)	Any
	35	Power factor correction capacitor terminals	Any

[1]Solid-state overload is ambient insensitive and has 1 NO and 1 NC isolated contacts as standard.
[2]If connected to control circuit transformer, 115-volt heater requires an extra capacity transformer for size 0-1 and size 5.

Control circuit fusing

Per the NEC and UL508 Section 18.2 — control circuit fuses must be used when the branch circuit protective device rating is too large to serve as protection for the control circuit. This depends on the control wire size and whether all control circuit wires are within the enclosure. See table below:

Provide supplemental control circuit protection if control circuits with wires longer than 12 inches are connected to branch circuit protection exceeding the ratings below

Control circuit wire size (AWG)	Maximum branch circuit protection rating (amperes)		Maximum supplemental control circuit protection rating (amperes)
	Conductors within enclosure	Conductors outside enclosure	
22	12	3	3
20	20	5	5
18	25	7	7
16	40	10	10
14	100	45	20
12	120	60	25

The factory must provide this protection, if the circuit provided by the factory requires the fuses. The factory will provide control circuit fuses in enclosed starters and contactors with pilot devices, control relays or other control components that are factory wired; when used with line voltage control; when the size listed below is being supplied.

Non-combination starters (CR305, CR306, CR309, CR385, CR386)

- Size 4 and above

Combination starters

- Size 0-3 with mag-break protector size 3 with:
  - Circuit breaker greater than 100 amps, or
  - Fuse clips greater than 100 amps, or size 4 and above with any circuit breakers, circuit protector or fuse clips.

Control circuit fuses (modification 9) must be added to the enclosed starter or contactor pricing.

All CPTs will be supplied with primary fuses. CPTs without primary fuses are no longer available. When control circuit fuses are not factory supplied, customer provided wiring or branch circuit protection sizing to these contactors and starters may still require that the customer/installer add the fusing in the field. It will be the customer/installer's responsibility to ensure code compliance under these conditions.

CR306, CR307, CR308, CR309, CR310, CR311, CR387, CR390, CR407, CR408, CR410, CR411, CR487, CR490 magnetic starters

Factory-installed modifications

Starter modifications—factory installed

The general information at the top of page 114, regarding factory-installed modifications, also applies to those listed in the table below.

Type of installation/starters	Item no.	Modifications	Enclosure type
CR309 two- speed with nonfusible or fusible switch CR311, CR411	37	Nonfusible	1
			3R, 12
			4/4X
	38	Fusible 30 A 250–600 V	1
			3R, 12
			4/4X
	39	Fusible 60 A 250–600 V	1
			3R, 12
			4/4X
	40	Fusible 100 A 250–600 V	1
			3R, 12
			4/4X
	41	Fusible 200 A 250–600 V	1
			3R, 12
			4/4X
	42	Fusible 400 A 250–600 V	1
			3R, 12
			4/4X
CR309 two- speed with circuit breaker CR310, CR410	43	Circuit breaker	1
			3R, 12
			4/4X

[1]Not available in NEMA size 00. Use size 0 starter and modification.

CR306, CR307, CR308, CR310 magnetic starters

Factory-installed modifications for magnetic starters

NEMA sizes 00-6

Factory-installed auxiliary contacts

The final letter of the product number denotes extra auxiliary contacts (sometimes referred to as auxiliary interlocks). Order the desired extra auxiliary contacts, factory installed on the starter, by replacing the final letter of the product number with a letter from the first column of the auxiliary contact table.

Example: CR307G104BAB is a size 5 starter with one extra auxiliary contact, normally open.

If a 306 product number has no 3-letter suffix, first add an "AAA" suffix, and then substitute a letter from first column of the auxiliary contact table.
Example: CR306C022 becomes CR306C022AAD for a size 1 starter with one extra NO and one extra NC auxiliary contact.

Extra auxiliary contact table

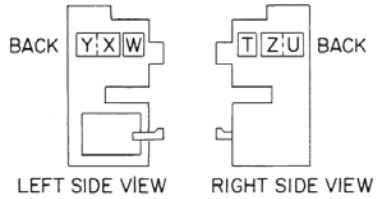

NEMA sizes 0 and 1 single-speed, nonreversing, 2- and 3-pole starters

Final suffix letter of product no. on starter	Contact location 4 contacts max.					
	W	X	Y	T	Z	U
A or None						
B		⊣⊢				
C			⋇			
D		⊣⊢	⋇			
E	⊣⊢	⊣⊢				
F	⋇		⋇			
G	⊣⊢	⊣⊢	⋇			
H	⋇	⊣⊢	⋇			
J	⊣⊢	⊣⊢			⊣⊢	
K	⋇		⋇	⊣⊢		⋇
L	⊣⊢	⊣⊢		⋇	⊣⊢	
M	⋇		⋇			⋇
N		⊣⊢	⋇		⊣⊢	⋇
P	⊣⊢	⊣⊢	⋇		⊣⊢	
R	⋇	⊣⊢	⋇			⋇

Extra auxiliary contact table

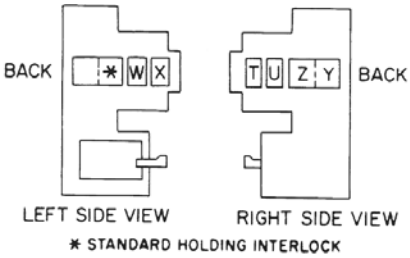

NEMA sizes 2, 3 and 4, single-speed nonreversing starters

Final suffix letter of product no. on starter	Contact location 5 contacts max.					
	W	X	Y	T	Z	U
A or None						
B	⊣⊢					
C	⋇					
D			⋇	⊣⊢		
E	⊣⊢	⊣⊢				
F	⋇	⋇				
G	⊣⊢		⋇	⊣⊢		
H	⋇		⋇	⊣⊢		
J	⊣⊢	⊣⊢		⊣⊢		
K	⋇	⋇	⋇			
L	⊣⊢	⊣⊢		⊣⊢		⊣⊢
M	⋇	⋇	⋇			⋇
N	⋇	⊣⊢	⋇	⊣⊢		
P	⊣⊢	⊣⊢	⋇	⊣⊢		
R	⋇	⋇	⋇	⊣⊢		
S	⋇	⊣⊢	⋇	⊣⊢		⊣⊢
T	⋇	⊣⊢	⋇	⊣⊢		⋇
U	⊣⊢	⊣⊢	⋇	⊣⊢		⊣⊢
W	⋇	⋇	⋇	⊣⊢		⋇
X	⊣⊢	⊣⊢		⊣⊢	⊣⊢	
Y	⋇	⋇	⋇		⋇	⋇

CR306, CR307, CR308, CR310 magnetic starters

Factory-installed modifications for magnetic starters

NEMA sizes 00-6

Extra auxiliary contact table

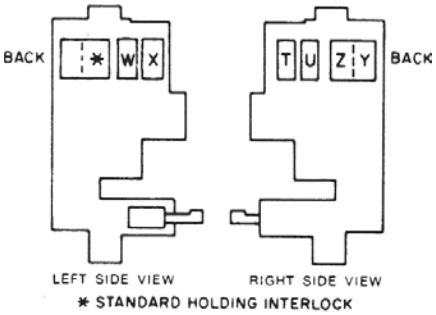

NEMA sizes 5 and 6 single-speed, nonreversing, starters

Final suffix letter of product no. on starter	Contact location 5 contacts max.					
	W	X	Y	T	Z	U
A or None						
B	⊣⊢					
C	⋇					
D			⋇	⊣⊢		
E	⊣⊢	⊣⊢				
F	⋇	⋇				
G	⊣⊢		⋇	⊣⊢		
H	⋇		⋇	⊣⊢		
J	⊣⊢	⊣⊢		⊣⊢		
K	⋇	⋇	⋇			
L	⊣⊢	⊣⊢		⊣⊢		⊣⊢
M	⋇	⋇	⋇			⋇
N	⋇	⊣⊢	⋇	⊣⊢		
P	⊣⊢	⊣⊢	⋇	⊣⊢		
R	⋇	⋇	⋇	⊣⊢		
S	⋇	⊣⊢	⋇	⊣⊢		⊣⊢
T	⋇	⊣⊢	⋇	⊣⊢		⋇
U	⊣⊢	⊣⊢	⋇	⊣⊢		⊣⊢
W	⋇	⋇	⋇	⊣⊢		⋇
X	⊣⊢	⊣⊢		⊣⊢	⊣⊢	⊣⊢
Y	⋇	⋇	⋇		⋇	⋇

CR305X, CR385X auxiliary contact kits

For field installation on magnetic starters

NEMA sizes 0-6

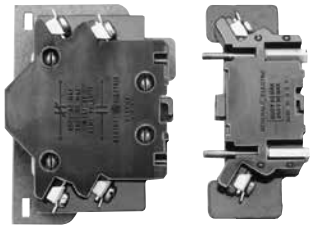

—
Basic block and adder block

Application
Auxiliary contacts can add to the versatility of magnetic starters by providing additional control circuits to do a variety of jobs without adding to the width of the starter.

Kits make it easy to add contacts to control accessory equipment such as indicating lights; to control sequencing of other motor starters; and in conjunction with a standard reversing starter and plugging switch, to plug-stop motors. Auxiliary contacts can be added to all across-the-line magnetic starters, combination magnetic starters, reversing and multi-speed starters.

Each auxiliary contact is rated 10 amperes AC, resistive load, NEMA “A600,” and is suitable for either right or left side mounting. An insulating shield is also provided between each auxiliary contact unit and the starter. Auxiliary contacts are furnished in the basic block design or as an adder block.

Each contact is marked NO or NC on the block and is not convertible.

Logic reed contacts suitable for low energy level circuits are also available. These are designed for applications on low-voltage control circuits (24 volts and below), such as inputs to computers and programmable starters.

Product number selection instructions

1. Order by quantity and complete product number.
   Example: Three CR305X300A

—
Reference publications

Instructions	
NEMA size	**Publication number**
0, 1	1SQC912014M0201
2	1SQC912015M0201
3, 4	1SQC912016M0201
5, 6	1SQC912032M0201
0, 1 Logic reed	1SQC912034M0201
2 Logic reed	1SQC912035M0201
3, 4 Logic reed	1SQC912036M0201
5, 6 Logic reed	1SQC912037M0201

CR305X, CR385X auxiliary contact kits

Field-installed modification kits

For 300-line starters

—

Auxiliary contact kits — basic blocks

NEMA size	Contact configuration	Block design	Product number
0,1	1NO	Basic	CR305X100A
0,1	1NC	Basic	CR305X100B
0,1	1NO–1NC	Basic	CR305X100C
2	1NO	Basic	CR305X200A
2	1NC	Basic	CR305X200B
2	1NO–1NC	Basic	CR305X200C
3,4	1NO	Basic	CR305X300A
3,4	1NC	Basic	CR305X300B
3,4	1NO–1NC	Basic	CR305X300C
5,6	1NO	Basic	CR305X500A
5,6	1NC	Basic	CR305X500B
5,6	1NO–1NC	Basic	CR305X500C
7	1NO	Basic	CR385X600A
7	1NC	Basic	CR385X600B
7	1NO–1NC	Basic	CR385X600C
8-9	1NO	Basic	CR385X800A
8-9	1NC	Basic	CR385X800B
8-9	1NO–1NC	Basic	CR385X800C

—

Auxiliary contact kits — adder blocks

NEMA size	Contact configuration	Block design	Product number
0-9	1NO	Adder	CR305X100D[1]
8-9	1NC	Adder	CR305X100E[1]

—

Logic reed switch auxiliary contacts[2]

NEMA size	Contact configuration	Product number
00, 0, 1	1NO–0NC	CR305X100RA
00, 0, 1	0NO–1NC	CR305X100RB
00, 0, 1	1NO–1NC	CR305X100RC
2	1NO–0NC	CR305X200RA
2	0NO–1NC	CR305X200RB
2	1NO–1NC	CR305X200RC
3, 4	1NO–0NC	CR305X300RA
3, 4	0NO–1NC	CR305X300RB
3, 4	1NO–1NC	CR305X300RC
5, 6	1NO–0NC	CR305X500RA
5, 6	0NO–1NC	CR305X500RB
5, 6	1NO–1NC	CR305X500RC

Contact ratings — basic blocks

—

Standard block

AC volts	Continuous current amperes	Inrush current amperes
115	6.0	60
230	3.0	30
460	1.5	15
575	1.2	12

High fidelity contact basic block

120 V AC maximum 0.15 A maximum, 8 VA maximum resistive.
30 V DC maximum 0.15 A maximum, 4.5 VA maximum resistive.

—

Standard block

DC volts	Continuous current amperes	Inrush current amperes
125	1.1	–
250	0.5	–
–	–	–
–	–	–

[1]First adder block must be mounted to a basic block. A second adder block can be added to the first adder block on size 2 through size 9 starters.
Four extra auxiliary contacts (not blocks) is the maximum that can be added to either a NEMA size 0 or 1 starter while five is the maximum extra auxiliary contacts that can be added to NEMA size 2 through 6 devices.
[2]CR305X logic reed switch auxiliary contacts may be ordered as a factory-installed modification. Order by description.

CR305X auxiliary contact kits

For field installation on magnetic starters (300-line)

Selection and installation guides

Extra auxiliary contact table
For NEMA size 0 and 1, AC coils only

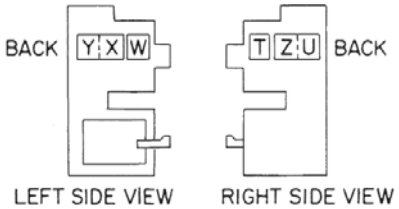

NEMA sizes 0 and 1, single-speed, nonreversing, 2- and 3-pole and starters (side views)

						Kits for field modification order in quantities shown product number CR305				
Contact location 5 contacts maximum						X100A	X100B	X100C[1]	X100D	X100E
W	X	Y	T	Z	U	Basic blocks			Adder blocks	
	┼					1				
		╪					1			
	┼	╪						1		
┼	┼					1			1	
╪		╪								1
┼	┼	╪						1	1	
╪	┼	╪						1		1
┼	┼			┼		2			1	
╪		╪	┼		╪		2			1
┼	┼		╪	┼		2			2	
╪		╪			╪		2			2
	┼	╪		┼	╪			2		
┼	┼	╪		┼		1		1	1	
╪	┼	╪			╪		1	1		1

Extra auxiliary contact table
For NEMA size 2, 3 and 4, AC coils only

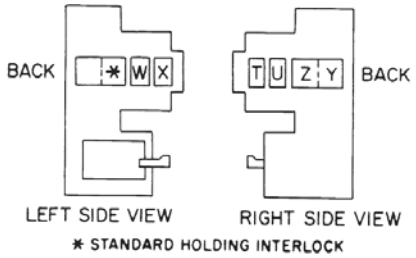

NEMA sizes 2, 3 and 4, single-speed, nonreversing, starters (side views)

						Kits for field modification order in quantities shown product number CR305				
										For size 2
						X200A	X200B	X200C[1]	X100D	X100E
										For sizes 3, 4
Contact location 5 contacts maximum						X300A	X300B	X300C[1]	X100D	X100E
W	X	Y	T	Z	U	Basic blocks			Adder blocks	
┼									1	
╪										1
		╪	┼					1		
┼	┼								2	
╪	╪									2
┼		╪	┼					1	1	
╪		╪	┼					1		1
┼	┼		┼			1			2	
╪	╪	╪					1			2
┼	┼		┼		┼	1			3	
╪	╪	╪			╪		1			3
╪	┼	╪	┼					1	1	1
┼	┼	╪	┼					1	2	
╪	╪	╪	┼					1		2
╪	┼	╪	┼		┼			1	2	1
╪	┼	╪	┼		╪			1	1	2
┼	┼	╪	┼		┼			1	3	
╪	╪	╪	┼		╪			1		3
┼	┼		┼	┼		1		1	4	
╪	╪	╪		╪	╪		1			4

CR305X auxiliary contact kits

For field installation on magnetic starters (300-line)

Selection and installation guides

Extra auxiliary contact table

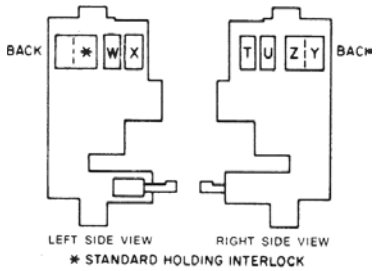

NEMA sizes 5 and 6 single-speed, nonreversing, starters (side views)

	Contact location 5 contacts maximum						Kits for field modification order in quantities shown product number CR305				
							X500A	X500B	X500C[1]	X100D	X100E
	W	X	Y	T	Z	U	Basic blocks			Adder blocks	
	⊣⊢									1	
	⋇										1
			⋇	⊣⊢					1		
	⊣⊢	⊣⊢								2	
	⋇	⋇									2
	⊣⊢		⋇	⊣⊢					1	1	
	⋇		⋇	⊣⊢					1		1
	⊣⊢	⊣⊢		⊣⊢			1			2	
	⋇	⋇	⋇					1			2
	⊣⊢	⊣⊢		⊣⊢		⊣⊢	1			3	
	⋇	⋇	⋇			⋇		1			3
	⋇	⊣⊢	⋇	⊣⊢					1	1	1
	⊣⊢	⊣⊢	⋇	⊣⊢					1	2	
	⋇	⋇	⋇	⊣⊢					1		2
	⋇	⊣⊢	⋇	⊣⊢		⊣⊢			1	2	1
	⋇	⊣⊢	⋇	⊣⊢		⋇			1	1	2
	⊣⊢	⊣⊢	⋇	⊣⊢		⊣⊢			1	3	
	⋇	⋇	⋇	⊣⊢		⋇			1		3
	⊣⊢	⊣⊢		⊣⊢	⊣⊢	⊣⊢	1			4	
	⋇	⋇	⋇		⋇	⋇		1			4

[1]Both NO and NC contacts must be wired for same polarity

Field-installed modification kits

For 300-line starters

NEMA sizes 00-6

Pilot device modification kits

The push button and selector switch kits listed here are supplied complete with the necessary components, hardware and written instructions for easy field installation on Type 1 enclosed starters—306.

Selector switch kits

Start-stop push button kits

Kit type	NEMA size	Product number
Momentary contact start-stop push button kits	00, 0, 1	CR305X120N
Momentary contact start-stop push button kits	2	CR305X220N
Momentary contact start-stop push button kits	3, 4	CR305X320B
Momentary contact start-stop push button kits	5	CR305X520B
H and-off-auto selector switch kits	00, 0, 1	CR305X130N
H and-off-auto selector switch kits	2	CR305X230N
H and-off-auto selector switch kits	3, 4	CR305X330B
H and-off-auto selector switch kits	5	CR305X530B
Off-on selector switch kits	00, 0, 1	CR305X130P
Off-on selector switch kits	2	CR305X230D
Off-on selector switch kits	3, 4	CR305X330D
Off-on selector switch kits	5	CR305X530D

Fifth-pole kits

To be installed on NEMA size 0, 1, and 2 magnetic four-pole contactors and starters. Permits the addition of a fifth pole with the same rating as the main poles.

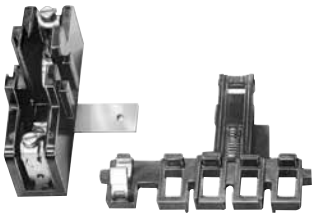

Fifth-pole kit

NEMA size	Mounting Position	Product Number
0, 1	Right	CR305X111B
2 (add to 4-pole form)	Left	CR305X211B

Field-installed modification kits

For 300-line starters

NEMA sizes 00-6

Adapter mounting plate

For mounting a 300-line magnetic starter in place of a competitive unit.
Adapter plate good for mounting in place of the following:

- A-B 709. Size 1: W B200. Sizes 00-2: Furnas Sizes 00-1: GTE TM. Sizes 00-2: Sq. D 8536, Sizes 00-2.
- Not needed for C-H—same as ABB.

Note: GTE now known as Joslyn Clark.

NEMA size	Product number
0, 1	CR306X191A

Indicating light kits (red)

To be installed on contactor and extend through knockout in cover of CR305-306 and devices in type 1 enclosures. Each kit has three resistors allowing light to be used with all voltages of 110 through 600. Uses NE-45 bulb. Can be used with push button or selector switch kit.

NEMA size	Product number
00, 0, 1	CR305X150N
2	CR305X250N
3, 4	CR305X350B
5	CR305X550B
NE-45 Bulb	CR2940U200BL

Field-installed modification kits

For 300-line starters

NEMA sizes 00-6

Surge suppression kit

To be connected in parallel with operating coil where the demands of solid-state circuitry necessitate prevention of undesirable reactions in logic circuits. For use on 120 volt AC only.

NEMA size	Product number
0-6	CR305X146C

Surge suppression kit

Control circuit fuse kits

Control circuit fuse kits are designed for installation on NEMA size 00-5 across-the-line contactors and starters. They install on the side of the contactor and provide fuse protection for control circuit wiring.

These kits incorporate one or two 10 ampere 600 volt fuse holders for use with KTK or KTK-R fuses (or equivalent). The fuses are easily accessible with the starter enclosure covers open, and each kit contains instructions and hardware for easy installation. Instructions: GEH-4822.

NEMA size	No. of fuses	Fuse type	Product number
00-1	1	KTK	CR305X141A
00-1	2	KTK	CR305X141B
2	1	KTK	CR305X241A
2	2	KTK	CR305X241B
3, 4	1	KTK	CR305X341A
3, 4	2	KTK	CR305X341B
5, 6	1	KTK	CR305X541A
5, 6	2	KTK	CR305X541B
00-1	1	KTK-R	CR305X141C
00-1	2	KTK-R	CR305X141D
2	1	KTK-R	CR305X241C
2	2	KTK-R	CR305X241D
3, 4	1	KTK-R	CR305X341C
3, 4	2	KTK-R	CR305X341D
5, 6	1	KTK-R	CR305X541C
5, 6	2	KTK-R	CR305X541D

Reference publications

Instructions, indicating light kits for type 1 enclosure	
NEMA size	Publication number
00, 0, 1	1SQC912038M0201
2	1SQC912039M0201
3, 4	1SQC912040M0201

Instructions, push button and selector switch kits for type 1 enclosure	
NEMA size	Publication number
00, 0, 1	1SQC910001M0201
2	1SQC912041M0201
3, 4	1SQC912042M0201
5	1SQC912043M0201

Field-installed modification kits

For 300-line starters

Combination starter transformer kit

To be installed in CR307, CR308, and CR387 size 0-6 combination starter. It supplies low voltage control for such a device. Note: Control circuit fuse kits from page 128 may be used, but refer to footnote 2 on page 116 for information regarding sizing of fuses to meet National Electrical Code (NEC) requirements.

Standard capacity

Transformer kit

VA capacity	NEMA size	Product number
50	0, 1	CR308XT1**A
100	2	CR308XT2**A
250	3	CR308XT3**A
250	4	CR308XT4**A
–	5	CR308XT5**A[1]

Extra capacity (100 watts)

Transformer kit

VA capacity	NEMA size	Product number
150	0, 1	CR308XT1**B
150	2	CR308XT2**B
300	3	CR308XT3**B
300	4	CR308XT4**B
–	5	CR308XT5**B[2]

****Voltage and frequency suffixes (60 hz)**

Transformer kit

Suffix	
04	220–230–240/440–460–480-volt dual primary reconnectable, 110–115–120 volt secondary
05	550–575–600-volt primary, 110–115–120 volt secondary
23	200–208-volt primary, 115–120 volt secondary

Field-installed modification kits

For 300-line starters

Control amplifier

The ABB CR305X control amplifier is suitable for applications with low level 24 volt DC outputs. It allows the low level signals from a programmable control, microprocessor, or photoelectric cell to operate ABB's 300-line starters while their control coils operate at the line voltage. The control amplifier is UL listed and CSA Certified, and forms are available for NEMA sizes 00 through 5.

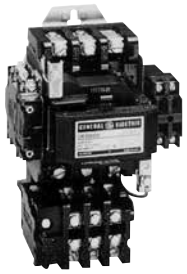

Typical size 2 starter with CR305X control amplifier mounted on right

Operation type	NEMA size	Product number
Nonreversing	00, 0, and 1	CR305X112A
Nonreversing	2	CR305X212A
Nonreversing	3 and 4	CR305X312A
Reversing	00, 0, 1, 2, 3, and 4	CR305X112P[3]

Space heater kits

CR305X701 and CR305X702 space heater kits (50 watts, except size 5 and 6 at 100 watts) come complete with one NC auxiliary contact, necessary hardware and ready for installation on any NEMA size 0 through 6 enclosed starter, CR306, CR307, CR308, CR309, CR310, and CR311, or equivalent 200-line devices.

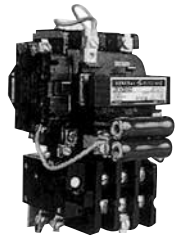

Space heater installed on typical NEMA size 1 starter

NEMA size	Operating voltage	Product number
0-1	115	CR305X701D[4]
0-1	230	CR305X701A
0-1	460	CR305X701B
0-1	600	CR305X701C
2, 3, 4	115	CR305X702D
2, 3, 4	230	CR305X702A
2, 3, 4	460	CR305X702B
2, 3, 4	600	CR305X702C
5, 6	115	CR305X705D[4]
5, 6	230	CR305X705A
5, 6	460	CR305X705B
5, 6	600	CR305X705C

[1]Consists of a 50 VA transformer and a relay. Use primary voltage for starter/contactor coil.
[2]Consists of a 150 VA transformer and a relay. Use primary voltage for starter/contactor coil.
[3]A quantity of two panel mount CR305X112P is required for use with reversing starters.
[4]If connected to control circuit transformer, 115-volt heater requires an extra-capacity transformer.
Contact nearest ABB Representative for additional information.

Field-installed modification kits

For 300-line starters

Mechanical interlock kits

To be installed on open CR306 or CR386 starters unless otherwise noted. If kit will not interlock starter you need, order a mechanically interlocked starter assembled complete at the factory. Kits include all parts to mechanically interlock 2 devices.

NEMA size	Mounting position	Baseplate	Product number
0-1	Horizontal	No	CR309X100B
2	Horizontal	No	CR309X200D
3-4	Horizontal	No	CR309X300B
5	Horizontal	Yes	CR309X501K
0-1	Vertical	Yes	CR309X102B
2	Vertical	Yes	CR309X202B
3-4	Vertical	Yes	CR309X302B
5	Vertical	No	CR309X502K
6	Vertical	No	CR309X602B
7	Vertical	No	CR389X100C
8-9	Vertical	No	CR389X100H

Reference publications

Instructions:	
Space heater kits	1SQC912044M0201
Control transformer kits	1SQC912005M0201

CR324 block overload relays for panel mounting

600 V AC/250 V DC, three-pole

135 Maximum amperes continuous

Application

The panel-mount block overload relay provides overload protection for motors having full-load currents up to 135 amperes. The relays are furnished complete for use on control panels. When an overload condition occurs in any of the three legs in which heaters are inserted, it will cause the relay to trip, opening a normally closed contact, and, as an option, closing a normally open contact.

Standard and ambient compensated forms with various contact arrangements are available. A normally open circuit may be connected to a signal light, an alarm bell, or input circuit of a programmable controller, e.g., to provide indication of an overload relay trip.

Features

- Flexibility of operation; trip rating can be easily changed by replacing the front-accessible heaters.
- Dual bimetal current monitoring; additional bimetal strip "anticipates" the rate of temperature rise in the motor winding; effectively reduces trip time in locked rotor conditions. It prevents dangerous temperature overshoot in the motor windings.

Product number selection instructions

1. Order required relay by complete product number as shown in table.
   Example: An open block-type relay with one normally closed contact is to be mounted in a control panel. Three-leg overload protection is needed and the full-load current of the motor being controlled is 40.5 amperes. Order: CR324D310A and three CR123C400B heaters. Heaters are selected from tables on page 144.

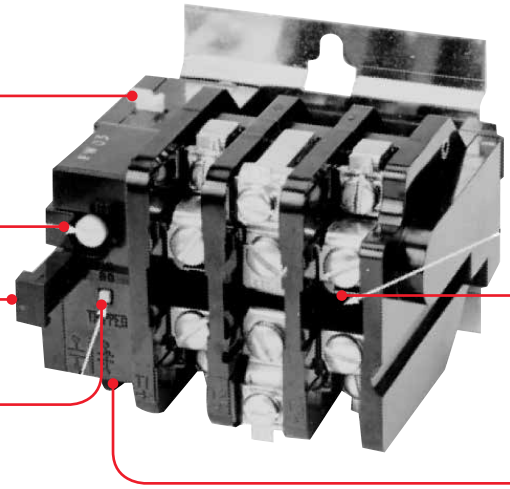

—
Typical 300-line overload relay with heater shown in center pole only

—
Reference publications

Instructions	
Instructions	1SQC912058M0201

CR324 block overload relays for panel mounting

600 V AC/250 V DC, three-pole

135 Maximum amperes continuous

CR324 block overload relays

			Manual reset			Automatic reset
			Standard panel-mount	Ambient compensated panel-mount	Standard panel-mount	Ambient compensated panel-mount
Current rating (amps)	NEMA size	Contact configuration	Product number CR324	Product number CR324	Product number CR324	Product number CR324
27	1	1NC	C310A	C610A	C310A1[1]	C610A1[1]
27	1	1NO–1NC	C360A	C660A	-	-
45	2	1NC	D310A	D610A	D310A1[1]	D610A1[1]
45	2	1NO–1NC	D360A	D660A	-	-
90	3	1NC	E310A	E610A	E310A1[1]	E610A1[1]
90	3	1NO–1NC	E360A	E660A	-	-
135	4	1NC	F310A	F610A	F310A1[1]	F610A[1]
135	4	1NO–1NC	F360A	F660A	-	-

[1]For NO/NC (SPDT) contact forms, contact nearest ABB Representative.

Contact ratings

Continuous rating amperes	Make amperes	Recommended maximum interrupting capacity, amperes					
		DC circuits		AC circuits			
AC or DC		125 V	250 V	115 V	230 V	460 V	575 V
10	30	0.35	0.17	3	1.5	0.75	0.6

Accessories

External reset kit

Enclosure type	NEMA size	Reset distance (in.) behind panel	Product number
NEMA Type 1 NEMA Type 12	00-5	1 - 6	CR124X100C
NEMA Type 4/4X	00-5	1 - 6	CR124X100D

For single or block overload relays and 200-, 300- and 400-line starters.

CR324, CR124 thermal overload relays

CR324 NEMA sizes 1-4

NEMA size	Dimension A	Dimension B	Dimension C	Dimension D	Dimension E	Dimension F	Dimension G	Dimension H	Dimension J	Dimension K	Dimension L	Mounting screw size
1	3.19 (81.0)	3.71 (94.2)	2.75 (69.8)	1.75 (44.4)	1.50 (38.1)	1.00 (25.4)	3.50 (88.9)	0.06 (1.5)	0.22 (5.5)	3.75 (95.2)	.66 (1.66)	#10
2	3.19 (81.0)	3.71 (94.2)	2.75 (69.8)	1.75 (44.4)	1.50 (38.1)	1.00 (25.4)	3.50 (88.9)	0.06 (1.5)	0.22 (5.5)	3.75 (95.2)	.66 (1.66)	#10
3	4.62 (117.4)	6.25 (158.8)	4.00 (101.6)	2.62 (66.5)	3.00 (76.2)	1.12 (28.4)	–	–	.38 (9.6)	4.28 (108.7)	.54 (13.7)	1/4”
4	4.62 (117.4)	6.25 (158.8)	4.00 (101.6)	2.62 (66.5)	3.00 (76.2)	1.12 (28.4)	–	–	.38 (9.6)	4.28 (108.7)	.54 (13.7)	1/4”

[1]For NO/NC (SPDT) contact forms, contact nearest ABB Representative.

CR124 NEMA sizes 1-4

NEMA size	Product number	Dimension A	Dimension B	Dimension C	Dimension D	Dimension E	Dimension F	Dimension G	Dimension H	Dimension J	Dimension K	Shipping weight
1	**CR124C**	**0.94 (23.8)**	2.75 (70.0)	3.41 (86.5)	See Drill Plan	0.28 (7.1)	–	1.38 (34.9)	0.79 (20.0)	0.58 (14.7)	–	6 oz.
1	CR124K	0.94 (23.8)	3.25 (82.6)	3.38 (86.0)	See Drill Plan	0.28 (7.1)	–	1.81 (46.0)	0.79 (20.0)	0.63 (15.9)	–	6 oz.
2	CR124D	0.94 (23.8)	2.72 (69.1)	3.41 (86.5)	See Drill Plan	0.28 (7.1)	–	1.38 (34.9)	0.79 (20.0)	0.34 (8.7)	–	6 oz.
2	CR124L	0.94 (23.8)	3.06 (77.8)	3.38 (86.0)	See Drill Plan	0.28 (7.1)	–	1.81 (46.0)	0.79 (20.0)	0.44 (11.1)	–	6 oz.
3	CR124E	1.50 (38.1)	5.00 (127.0)	4.28 (108.7)	2.31 (58.7)	0.50 (12.7)	1.00 (25.4)	–	1.13 (28.6)	0.75 (19.1)	3.8 (95.2)	1 lb.
3	CR124M[1]	1.63 (41.3)	6.28 (159.5)	4.25 (108.0)	2.31 (58.7)	0.34 (8.7)	–	0.50 (12.7)	0.81 (20.6)	1.63 (41.3)	3.66 (92.9)	1 lb.
4	CR124F	1.50 (38.1)	5.25 (133.4)	4.28 (108.7)	2.31 (58.7)	0.50 (12.7)	1.00 (25.4)	–	1.13 (28.6)	1.00 (25.4)	3.94 (100.0)	1.5 lbs.
4	CR124N[1]	1.63 (41.3)	6.81 (173.0)	4.25 (108.0)	2.31 (58.7)	0.34 (8.7)	–	0.50 (12.7)	0.81 (20.6)	1.88 (47.6)	4.47 (113.5)	1.5 lbs.
5	CR124G011[2]	3.00 (76.2)	8.50 (215.9)	5.44 (138.1)	6.00 (152.4)	–	1.00 (25.4)	–	–	3.63 (92.2)	5.63 (142.9)	3 lbs.
5	CR124G019[2]	3.00 (76.2)	8.50 (215.9)	5.44 (138.1)	6.00 (152.4)	–	1.00 (25.4)	–	–	3.63 (92.2)	5.63 (142.9)	3 lbs.

[1]Control terminals are at top, adjusting knob at bottom on these forms.
[2]Between clearance holes through ¾” thick compound base for ⅜” mounting bolts; upper hole is 2⅜” above top of relay body (1¼” below top of top terminal).

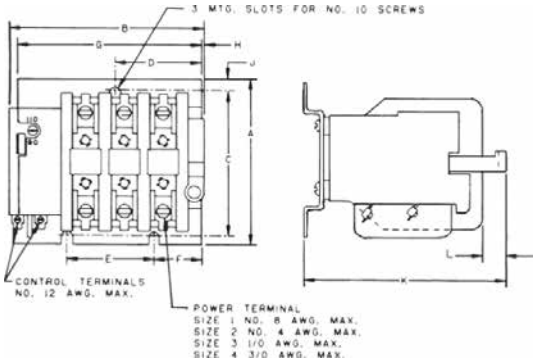

CR324

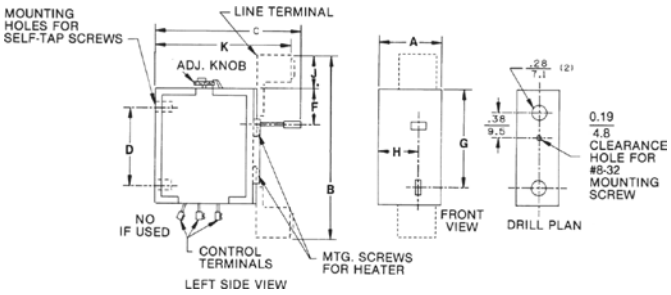

CR124

Outlines, dimensions (in. / mm) and weights (for estimating only)

CR324, CR124 thermal overload relays

CR124 panel mounting bracket 1-pole sizes 1-4 relays

NEMA size	Dimension A	Dimension B	Dimension C	Dimension D	Dimension E	Dimension F	Dimension G	Dimension H	Dimension J
1, 2	0.75 (19.1)	3.12 (79.4)	2.50 (63.5)	1.35 (34.3)	–	–	0.28D (7.1D)	–	0.19D (4.8)
3, 4	1.00 (25.4)	4.50 (114.3)	3.13 (79.5)	–	1.00 (25.4)	2.31 (58.7)	0.28D (7.1D)	0.26D (6.5D)	–

[1]For NO/NC (SPDT) contact forms, contact nearest ABB Representative.

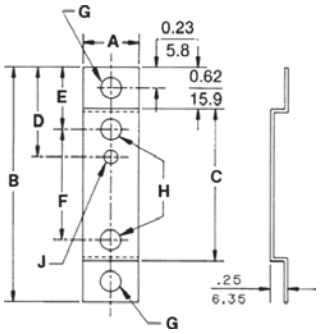

Panel mounting bracket ,
1-pole sizes 1-4 relays

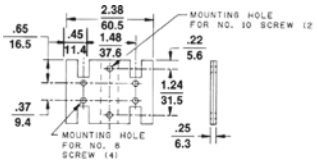

Panel mounting bracket ,
2-pole sizes 1 and 2 relays

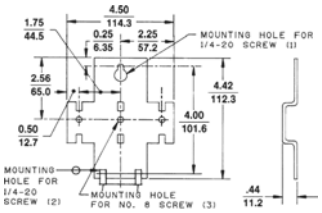

Panel mounting bracket ,
3-pole sizes 1 and 2 relays

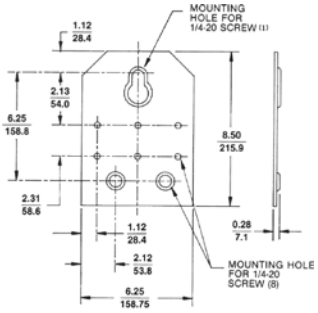

Panel mounting bracket ,
3-pole sizes 3 and 4 relays

Electronic overload relays

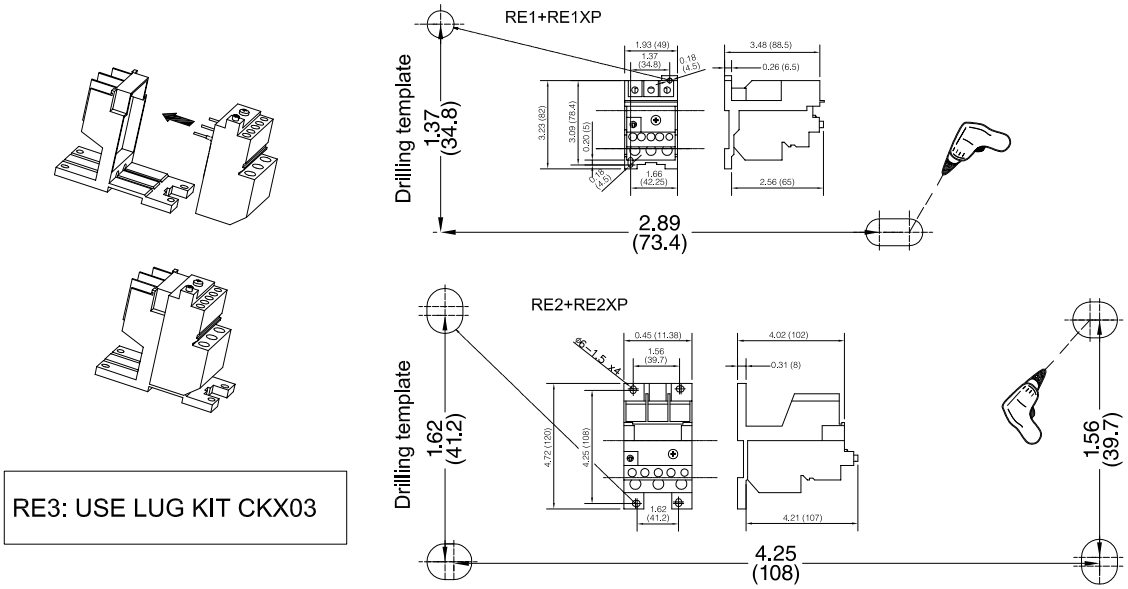

Panel mount

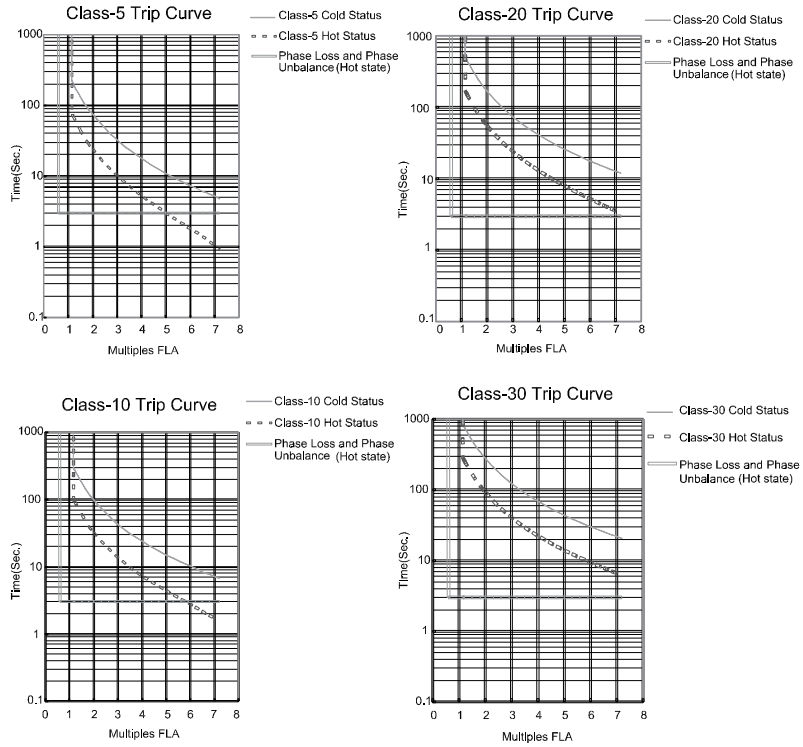

Trip curves

Approximate motor full-load current ratings

Full-load current of normal efficiency motors — average expected values

For three-phase, 60 Hz, GE Type K (NEMA Design B) Tri-Clad 700-Line, normal efficiency, drip-proof, normal starting torque, continuous, 40 °C ambient (1.15 service factor) horizontal induction motors.

Motor horsepower	Synchronous speed RPM	Average expected values of full-load currents[1]			
		200 V	230 V	460 V	575 V
1/42	1800	1.6	1.4	0.70	0.56
	1200	1.7	1.5	0.75	0.60
1/32	3600	2.0	1.7	0.85	0.68
	1800	1.7	1.5	0.75	0.60
	1200	2.0	1.7	0.85	0.68
½	3600	2.0	1.8	0.88	0.70
	1800	2.3	2.0	1.0	0.80
	1200	2.3	2.0	1.0	0.80
	900	3.2	2.8	1.4	1.4
¾	3600	2.8	2.4	1.2	0.96
	1800	3.2	2.8	1.4	1.1
	1200	3.7	3.2	1.6	1.3
	900	4.4	3.8	1.9	1.5
1	3600	3.7	3.2	1.6	1.3
	1800	4.1	3.6	1.8	1.4
	1200	4.4	3.8	1.9	1.5
	900	5.5	4.8	2.4	1.9
1½	3600	5.3	4.6	2.3	1.8
	1800	6.0	5.2	2.6	2.1
	1200	6.0	5.2	2.6	2.1
	900	7.1	6.2	3.1	2.5
2	3600	6.9	6.0	3.0	2.4
	1800	7.1	6.2	3.1	2.5
	1200	7.6	6.6	3.3	2.6
	900	10.6	9.2	4.6	3.7
3	3600	9.4	8.2	4.1	3.3
	1800	9.9	8.6	4.3	3.4
	1200	12.0	10.4	5.2	4.2
	900	15.4	13.4	6.7	5.4
5	3600	15.4	13.4	6.7	5.4
	1800	16.3	14.2	7.1	5.7
	1200	19.3	16.8	8.4	6.7
	900	19.8	17.2	8.6	6.9
7½	3600	21.6	18.8	9.4	7.5
	1800	23.7	20.6	10.3	8.2
	1200	26.0	23.6	11.3	9.0
	900	28.5	24.8	12.4	9.9
10	3600	27.4	23.8	11.9	9.5
	1800	31.3	27.2	13.6	10.9
	1200	32.7	28.4	14.2	11.4
	900	33.1	28.8	14.4	11.5
15	3600	42.6	37.0	18.5	14.8
	1800	46.7	40.6	20.3	16.2
	1200	45.1	39.2	19.6	15.7
	900	47.6	41.4	20.7	16.6
20	3600	62.3	54.2	27.1	21.7
	1800	59.3	51.6	25.8	20.6
	1200	56.6	48.2	24.6	19.7
	900	63.9	55.6	27.8	22.2

[1]For expected values on 208 volt, 50 Hz, three-phase motors, contact nearest ABB Representative.

[2]Open, type K, general-purpose, NEMA SF, solid-base, rolled-steel-shell, ABB induction motors.

Motor horsepower	Synchronous speed RPM	Average expected values of full-load currents[1]			
		200 V	230 V	460 V	575 V
25	3600	72.0	62.6	31.3	25.0
	1800	71.3	62.0	31.0	24.8
	1200	73.8	64.2	32.1	25.7
	900	82.6	71.8	35.9	28.7
30	3600	85.6	74.4	37.2	29.8
	1800	86.0	74.8	37.4	29.9
	1200	88.6	77.0	38.5	30.8
	900	92.2	80.2	40.1	32.1
40	3600	110	95.6	47.8	39.2
	1800	116	100.9	50.4	40.3
	1200	114	99.6	49.8	39.8
	900	122	105.8	52.9	42.3
50	3600	140	122.2	61.1	48.9
	1800	142	123.6	61.8	49.4
	1200	144	125.2	62.6	50.1
	900	159	138.2	69.1	55.3
60	3600	163	141.4	70.7	56.6
	1800	172	149.8	74.9	59.9
	1200	172	149.2	74.6	59.7
	900	176	153.4	76.7	61.4
75	3600	206	178.8	89.4	71.5
	1800	207	180.0	90.0	72.0
	1200	206	179.2	89.6	71.7
	900	221	191.8	95.9	76.7
100	3600	262	228	114	91.2
	1800	281	244	122	97.7
	1200	283	246	123	98.4
	900	296	258	129	103
125	3600	334	290	145	116
	1800	340	296	148	118
	1200	352	306	153	122
	900	370	322	161	129
150	3600	398	346	173	138
	1800	412	348	179	143
	1200	419	364	182	146
	900	435	378	189	151
200	3600	–	446	223	178
	1800	–	468	234	187
	1200	–	482	241	193
250	3600	–	574	287	230
	1800	–	590	295	236
	1200	–	594	297	238
300	3600	–	676	338	270
	1800	–	686	343	274
350	3600	–	774	387	310
	1800	–	792	396	317
400	3600	–	890	445	356

Note: T he listed data is based on approximate full-load current ratings of standard, open, 1.15 service factor, continuous rated GE motors. Full-load current ratings of similar motors of other manufacturers may vary considerably. Therefore, whenever possible use actual full-load current rating given on motor nameplate. Contact motor manufacturer for full-load currents of single-phase and DC motors.

Approximate motor full-load current ratings

Full-load current of Energy Saver™ motors—average expected values

For three-phase, 60 Hz, GE Type KS (NEMA Design B) Energy Saver™ high-efficiency, drip-proof, normal starting torque, continuous, 40°C ambient (1.15 service factor) horizontal induction motors.

Motor horsepower	Synchronous speed RPM	Average expected values of full-load currents[1]			
		200 V	230 V	460 V	575 V
3	1200	10.4	9.0	4.5	3.6
5	1200	16.1	14.0	7.0	5.6
7½	3600	20.2	17.6	8.8	7.0
	1800	20.7	18.0	9.0	7.2
	1200	22.5	19.6	9.8	7.8
10	3600	26.2	22.8	11.4	9.1
	1800	27.6	24.0	12.0	9.6
	1200	29.4	25.6	12.8	10.2
15	3600	40.7	35.4	17.7	14.2
	1800	42.1	36.6	18.3	14.6
	1200	42.1	36.4	18.2	14.6
20	3600	52.2	45.4	22.7	18.1
	1800	54.3	47.2	23.6	18.9
	1200	55.4	48.2	24.1	19.3
25	3600	65.1	56.6	28.3	22.6
	1800	66.0	57.4	28.7	23.0
	1200	69.9	60.8	30.4	24.3
30	3600	76.4	66.4	33.2	26.6
	1800	79.4	69.0	34.5	27.6
	1200	83.3	72.4	36.2	29.0
40	3600	100.7	87.6	43.8	35.0
	1800	104.6	91.0	45.5	36.4
	1200	108.3	94.2	47.1	37.7

[1]For expected values on 208 volt, 50 Hz, three-phase motors, contact nearest ABB Representative.

Motor horsepower	Synchronous speed RPM	Average expected values of full-load currents[1]			
		200 V	230 V	460 V	575 V
50	3600	126.0	110.0	55.0	44.0
	1800	132.2	115.0	57.5	46.0
	1200	134.6	117.0	58.5	46.8
60	3600	151.6	131.8	65.9	52.7
	1800	160.8	139.8	69.9	55.9
	1200	161.5	140.4	70.2	56.2
75	3600	187.4	163.0	81.5	65.2
	1800	198.7	172.8	86.4	69.1
	1200	199.4	173.4	86.7	69.4
100	3600	253.0	220.0	110.0	88.0
	1800	264.5	230.0	115.0	92.0
	1200	257.6	224.0	112.0	89.6
125	3600	317.9	276.4	138.2	110.6
	1800	314.6	273.6	136.8	109.4
	1200	319.7	278.0	139.0	111.2
150	3600	381.3	331.6	165.8	132.6
	1800	381.8	332.0	166.0	132.8
	1200	395.6	344.0	172.0	137.6
200	3600	480.7	418.0	209.0	167.2
	1800	499.1	434.0	217.0	173.6
	1200	522.1	454.0	227.0	181.6
250	3600	637.1	554.0	277.0	221.6
	1800	676.2	588.0	294.0	235.2

CR123C, CR123F motor starter heaters

Heater selection

Magnetic starters — full voltage

Heater selection information

To prevent overloading the starter, do not select heater(s) for a motor of larger rating than the maximum given on the nameplate for the starter.

For continuous rated motors, with a service factor of 1.15 to 1.25, select the heater with maximum motor amperes equal to or immediately greater than the motor full-load current (provides a maximum of 125% protection). For continuous rated motors with no service factor, multiply the full-load current of the motor by 0.90 and use this value to select the heater.

To protect the heater and starter during a short circuit, provide motor-branch-circuit protection in accordance with Table 430- 152 in Article 430 of the National Electrical Code. In no case should the fuse rating exceed 4 times the motor full-load current for single-element fuses, or 2.25 times for dual-element fuses, or the fuse size listed in heater table under Maximum Fuse Rating.

Caution: Overload relays, when furnished with automatic reset, should not be used with two-wire, maintained contact pilot devices such as pressure, float and limit switches, as inadvertent restarting of the motor can occur.

How to select heaters

The table below should be used to determine which column of motor full-load amperes applies for heater selection. Select in order, the basic device–including product number and description, the NEMA Type of enclosure, and the column to be used in the proper table by NEMA size.

If full-load amperes of the motor falls between two ratings, select heaters for the higher rating.

Ordering information

All CR123C and 123F heaters are packaged three to a carton. Items of these heaters being ordered for either customer's stock or any other purpose, are to be specified in multiples of three (such as 3, 6, 9, 12, 15, etc.). Minimum order quantity is three.

Heater product number

CR123C (All)
CR123F (All)

Heater rack product number

CR243X10049

Base product number starter/overload relay	Description	NEMA type enclosure	Quantity heaters required		Heater table column (pages 140–141)
CR306	Single-phase, 2-pole, size 00-2	Open	1		A
	Single-phase, 2-pole, size 00-2	1, 3R, 4/4X, 12	1		B
	Single-phase, 2-pole, size 3	Open	2		A
	Single-phase, 2-pole, size 6	1, 3R, 4/4X, 12	2		B
CR306	3-Phase, 3-pole, 3-leg protection	Open	3		C
	Standard, size 00-5				
	Ambient compensated, size 00, 0, 1, 2 and 5	Open	3		C
	Ambient compensated, size 3	Open	3		D
	Ambient compensated, size 8	Open	3		E
CR306, CR307, CR308, CR387, CR407, CR408, CR487	3-Phase, 3-pole, 3-leg protection	1, 3R, 4/4X, 12	3		D
	Standard, size 00-5				
	Ambient compensated, size 00, 0, 1, 2 and and 5	1, 3R, 4/4X, 12	3		C
	Ambient compensated, size 3	1, 3R, 4/4X, 12	3		D
	Ambient compensated, size 8	1, 3R, 4/4X, 12	3		E
CR309	3-Phase, 3 3-pole, 3-leg protection	Open	3-Reverser	6-Two-speed	C
	Standard, size 00-5				
	Ambient compensated, size 00, 0, 1, 2 and 5	Open	3-Reverser	6-Two-speed	C
	Ambient compensated, size 3	Open	3-Reverser	6-Two-speed	D
	Ambient compensated, size 8	Open	3-Reverser	6-Two-speed	E
CR309, CR410, CR411, CR490	3-Phase, 3 3-pole, 3-leg protection	1, 3R, 4/4X, 12	3-Reverser	6-Two-speed	D
	Standard, size 00-5				
	Ambient compensated, size 00, 0, 1, 2 and 5	1, 3R, 4/4X, 12	3-Reverser	6-Two-speed	C
	Ambient compensated, size 3	1, 3R, 4/4X, 12	3-Reverser	6-Two-speed	D
	Ambient compensated, size 8	1, 3R, 4/4X, 12	3-Reverser	6-Two-speed	E
CR324	Panel-mounted				See tables, page 143
All NEMA sizes 6-9	3-Phase, 3-leg protection, standard				See tables, page 143
CR124	Single-element, panel-mounted				See tables, page 142
CR124	Single-element, ambient compensated, standard and quick trip				See tables, page 144

CR123C, CR123F motor starter heaters

Heater selection

All CR123C and 123F heaters are packaged three to a carton. Items of these heaters, being ordered for either customer's stock or any other purpose, are to be specified in multiples of three (such as 3, 6, 9, 12, 15, etc.). Minimum order quantity is three.

NEMA sizes 00, 0 and 1

Maximum motor full-load amperes				
A	B	C	D	Heater product number
0.48	0.46	0.45	0.43	CR123C054A
0.55	0.50	0.49	0.48	CR123C060A
0.57	0.57	0.53	0.53	CR123C066A
0.65	0.62	0.59	0.58	CR123C071A
0.69	0.68	0.65	0.64	CR123C078A
0.83	0.80	0.76	0.74	CR123C087A
0.97	0.91	0.84	0.84	CR123C097A
1.03	0.99	0.93	0.92	CR123C109A
1.12	1.09	1.04	1.02	CR123C118A
1.26	1.22	1.15	1.10	CR123C131A
1.40	1.31	1.27	1.23	CR123C148A
1.46	1.46	1.39	1.38	CR123C163A
1.63	1.59	1.55	1.49	CR123C184A
1.79	1.74	1.73	1.67	CR123C196A
1.97	1.93	1.89	1.79	CR123C220A
2.25	2.13	2.05	1.98	CR123C239A
2.43	2.37	2.28	2.24	CR123C268A
2.60	2.52	2.47	2.43	CR123C301A
2.96	2.87	2.79	2.75	CR123C326A
3.57	3.39	3.31	3.25	CR123C356A
3.86	3.59	3.70	3.43	CR123C379A
4.43	4.31	4.06	4.03	CR123C419A
4.87	4.57	4.47	4.43	CR123C466A
5.37	5.31	4.95	4.94	CR123C526A
5.99	5.86	5.49	5.36	CR123C592A
6.39	6.19	5.91	5.77	CR123C630A
6.87	6.61	6.47	6.35	CR123C695A
7.71	7.61	7.20	6.92	CR123C778A
8.72	8.46	8.22	7.99	CR123C867A
9.50	9.35	8.72	8.47	CR123C955A
10.5	10.4	9.67	9.19	CR123C104B
11.7	11.3	10.4	10.0	CR123C113B
12.2	11.9	11.0	10.7	CR123C125B
13.5	13.0	12.4	12.0	CR123C137B
15.1	14.5	13.2	12.9	CR123C151B
17.5	17.4	15.4	15.1	CR123C163B
18.9	18.6	17.1	16.3	CR123C180B
20.8	20.5	18.1	17.9	CR123C198B
22.4	22.3	20.0	19.7	CR123C214B
25.5	24.7	21.5	21.2	CR123C228B
26.2	25.7	22.5	22.3	CR123C250B
27.0	27.0	23.9	23.5	CR123C273B
–	–	26.3	25.5	CR123C303B
–	–	27.0	27.0	CR123C330B

NEMA size 1P

Maximum motor full-load amperes		
A	B	Heater product number
14.2	14.2	CR123C151B
17.3	17.3	CR123C163B
18.7	18.7	CR123C180B
20.6	20.6	CR123C198B
22.5	22.5	CR123C214B
24.7	24.7	CR123C228B
25.5	25.5	CR123C250B
26.7	26.7	CR123C273B
27.9	27.9	CR123C303B
32.1	32.1	CR123C330B
36.0	36.0	CR123C366B

NEMA size 2

Maximum motor full-load amperes				
A	B	C	D	Heater product number
5.92	5.79	5.85	5.72	CR123C592A
6.23	6.12	6.47	6.30	CR123C630A
6.63	6.49	7.35	7.04	CR123C695A
7.72	7.59	8.06	7.91	CR123C778A
8.96	8.71	9.03	8.80	CR123C867A
9.92	9.19	9.61	9.27	CR123C955A
10.4	10.1	10.5	9.99	CR123C104B
11.7	11.2	11.6	11.1	CR123C113B
12.1	11.9	12.5	12.1	CR123C125B
13.5	12.6	13.6	13.1	CR123C137B
14.7	14.5	16.7	15.5	CR123C151B
18.3	17.7	17.9	16.8	CR123C163B
20.1	19.1	18.7	18.0	CR123C180B
22.3	21.4	20.4	19.7	CR123C198B
25.0	22.9	22.7	21.6	CR123C214B
27.7	24.7	24.7	23.9	CR123C228B
29.3	25.9	26.3	25.5	CR123C250B
30.7	27.1	29.5	28.2	CR123C273B
32.7	30.2	32.5	31.6	CR123C303B
35.6	34.8	36.7	34.7	CR123C330B
39.4	38.7	41.9	37.8	CR123C366B
45.0	45.0	43.2	40.6	CR123C400B
–	–	45.0	45.0	CR123C440B
–	–	–	–	CR123C460B

CR123C, CR123F motor starter heaters

Heater selection

All CR123C and 123F heaters are packaged three to a carton. Items of these heaters, being ordered for either customer's stock or any other purpose, are to be specified in multiples of three (such as 3, 6, 9, 12, 15, etc.). Minimum order quantity is three.

NEMA size 3

Maximum motor full-load amperes				
A	B	C	D	Heater product number
20.2	19.4	–	–	CR123F199B
21.0	20.1	–	–	CR123F218B
21.8	21.1	19.3	18.4	CR123F233B
24.5	24.6	22.1	21.1	CR123F243B
25.7	25.2	23.4	22.1	CR123F270B
29.2	29.2	27.0	26.1	CR123F300B
33.5	32.8	29.1	28.0	CR123F327B
37.0	35.1	31.8	31.3	CR123F357B
39.2	38.4	33.9	33.3	CR123F395B
42.7	40.4	37.6	34.3	CR123F430B
45.7	45.7	41.9	40.9	CR123F487B
48.4	48.9	47.7	44.7	CR123F567B
54.9	54.7	52.1	51.0	CR123F614B
62.7	58.6	55.8	52.0	CR123F658B
67.5	63.4	59.7	55.4	CR123F719B
77.1	72.3	68.1	63.3	CR123F772B
81.5	76.6	71.5	66.1	CR123F848B
86.3	83.8	78.2	73.5	CR123F914B
90.0	90.0	87.5	82.2	CR123F104C
–	–	90.0	90.0	CR123F114C

NEMA size 4

Maximum motor full-load amperes			
C	D	E	Heater product number
32.2	32.0	32.0	CR123F357B
34.0	34.2	34.2	CR123F395B
36.8	36.7	36.7	CR123F430B
44.6	43.9	43.9	CR123F487B
48.4	46.6	46.6	CR123F567B
53.9	52.6	52.6	CR123F614B
57.4	55.6	55.6	CR123F658B
60.0	58.7	58.7	CR123F719B
69.5	67.1	67.1	CR123F772B
71.7	70.6	70.6	CR123F848B
79.9	76.3	76.3	CR123F914B
92.3	88.7	88.7	CR123F104C
97.0	93.4	93.4	CR123F114C
108.0	102.0	105.0	CR123F118C
118.0	110.0	114.0	CR123F133C
131.0	122.0	128.0	CR123F149C
135.0	131.0	131.0	CR123F161C
–	135.0	135.0	CR123F174C

NEMA size 5

Maximum motor full-load amperes		
C	D	Heater product number
118	115	CR123C592A
128	125	CR123C630A
138	135	CR123C695A
155	151	CR123C778A
168	164	CR123C867A
184	179	CR123C955A
200	195	CR123C104B
221	215	CR123C113B
237	231	CR123C125B
262	255	CR123C137B
270	270	CR123C151B

CR123C, CR123F motor starter heaters

Heater selection

Heater tables — NEMA sizes 6-9

Information shown in tables for full voltage starters can be used by customer to select heaters for size 6-9 combination starters also. However, for these combination forms, the factory will verify selection and install the required heaters based on available motor data.

All CR123C and 123F heaters are packaged three to a carton. Items of these heaters, being ordered for either customer's stock or any other purpose, are to be specified in multiples of three (such as 3, 6, 9, 12, 15, etc.). Minimum order quantity is three.

NEMA size 6

CR306HH — size 6 Three heaters required	
Maximum motor amperes	**Heater product number**
197	CR123C220A
214	CR123C239A
238	CR123C268A
258	CR123C301A
290	CR123C326A
346	CR123C356A
387	CR123C379A
424	CR123C419A
467	CR123C466A
516	CR123C526A
540	CR123C592A

CR123C, CR123F panel mounted overload relay heaters

Heater selection

Overload relays

For CR324 standard and ambient compensated block overloads—panel-mounted

All CR123C and 123F heaters are packaged three to a carton. Items of these heaters, being ordered for either customer's stock or any other purpose, are to be specified in multiples of three (such as 3, 6, 9, 12, 15, etc.). Minimum order quantity is three.

Three heaters

Maximum motor full-load amperes	Heater product number	Maximum fuse rating	Maximum motor full-load amperes	Heater product number	Maximum fuse rating
CR324C (Size 0, 1)					
0.39	CR123C054A	3	3.89	CR123C466A	15
0.42	CR123C060A	3	4.30	CR123C526A	15
0.45	CR123C066A	3	4.77	CR123C592A	15
0.51	CR123C071A	3	5.14	CR123C630A	20
0.56	CR123C078A	3	5.63	CR123C695A	20
0.65	CR123C087A	3	6.26	CR123C778A	25
0.73	CR123C097A	3	7.15	CR123C867A	25
0.81	CR123C109A	3	7.58	CR123C955A	30
0.90	CR123C118A	3	8.39	CR123C104B	30
1.00	CR123C131A	3	9.11	CR123C113B	35
1.10	CR123C148A	3	9.67	CR123C125B	35
1.21	CR123C163A	3	11.0	CR123C137B	40
1.35	CR123C184A	3	11.9	CR123C151B	45
1.50	CR123C196A	6	14.3	CR123C163B	50
1.64	CR123C220A	6	16.1	CR123C180B	60
1.78	CR123C239A	6	17.2	CR123C198B	60
1.98	CR123C268A	6	19.2	CR123C214B[1]	70
2.15	CR123C301A	6	20.6	CR123C228B[1]	80
2.42	CR123C326A	6	21.8	CR123C250B[1]	80
2.88	CR123C356A	10	23.4	CR123C273B[1]	80
3.22	CR123C379A	12	26.1	CR123C303B[1]	90
3.53	CR123C419A	12	27.0	CR123C330B[1]	90
CR324D (Size 2)					
5.14	CR123C630A	20	8.39	CR123C104B	30
5.63	CR123C695A	20	9.11	CR123C113B	35
6.26	CR123C778A	20	9.67	CR123C125B	35
7.15	CR123C867A	25	11.0	CR123C137B	40
7.58	CR123C955A	30	12.0	CR123C151B	45
14.4	CR123C163B	60	28.0	CR123C303B	100
16.3	CR123C180B	60	32.1	CR123C330B	110
17.3	CR123C198B	60	35.9	CR123C366B	125
19.3	CR123C214B	70	41.5	CR123C400B	150
20.9	CR123C228B	80	43.4	CR123C440B	150
22.9	CR123C250B	90	45.0	CR123C460B	150
24.7	CR123C273B	90	–	–	–

[1]Size 1 only.

Three heaters

Maximum motor full-load amperes	Heater product number	Maximum fuse rating	Maximum motor full-load amperes	Heater product number	Maximum fuse rating
CR324E (Size 3)					
18.0	CR123F233B	70	44.4	CR123F567B	175
20.5	CR123F243B	80	48.4	CR123F614B	175
21.7	CR123F270B	80	52.4	CR123F658B	200
25.1	CR123F300B	90	57.0	CR123F719B	225
27.0	CR123F327B	100	64.5	CR123F772B	225
30.5	CR123F357B	110	68.8	CR123F848B	250
32.5	CR123F395B	125	75.7	CR123F914B	275
33.9	CR123F430B	125	86.2	CR123F104C	275
38.9	CR123F487B	150	90.0	CR123F114C	300
CR324F (Size 4)					
30.5	CR123F357B	100	68.6	CR123F848B	250
32.5	CR123F395B	125	75.7	CR123F914B	275
33.9	CR123F430B	125	86.2	CR123F104C	275
38.9	CR123F487B	150	93.0	CR123F114C	300
44.4	CR123F567B	175	109.0	CR123F118C	350
48.4	CR123F614B	175	123.0	CR123F133C	400
52.4	CR123F658B	200	131.0	CR123F149C	400
57.0	CR123F719B	225	135.0	CR123F161C	400
64.5	CR123F772B	225	–	–	–

CR123C, CR123F panel mounted overload relay heaters

Heater selection

Overload relays

All CR123C and 123F heaters are packaged three to a carton. Items of these heaters, being ordered for either customer's stock or any other purpose, are to be specified in multiples of three (such as 3, 6, 9, 12, 15, etc.). Minimum order quantity is three.

Maximum motor full-load amperes	Heater product number
For CR124C (Size 0, 1)	
0.33	CR123C036A
.37	CR123C039A
.41	CR123C043A
.46	CR123C048A
.52	CR123C054A
.57	CR123C060A
.61	CR123C066A
.67	CR123C071A
.75	CR123C078A
.84	CR123C087A
.94	CR123C097A
1.03	CR123C109A
1.14	CR123C118A
1.30	CR123C131A
1.42	CR123C148A
1.61	CR123C163A
1.72	CR123C184A
1.93	CR123C196A
2.10	CR123C220A
2.34	CR123C239A
2.64	CR123C268A
2.86	CR123C301A
3.13	CR123C326A
3.32	CR123C356A
3.68	CR123C379A
4.08	CR123C419A
4.61	CR123C466A
5.21	CR123C526A
5.62	CR123C592A
6.12	CR123C630A
6.83	CR123C695A
7.70	CR123C778A
8.48	CR123C867A
9.19	CR123C955A
9.92	CR123C104B
11.1	CR123C113B
12.2	CR123C125B
13.5	CR123C137B
14.6	CR123C151B
16.1	CR123C163B
17.9	CR123C180B
19.3	CR123C198B[1]
20.6	CR123C214B[1]
22.6	CR123C228B[1]
24.8	CR123C250B[1]
27.0	CR123C273B[1]

[1]For use on size 1 only.
[2]Two heaters required.

Maximum motor full-load amperes	Heater product number
For CR124D (Size 2)	
6.63	CR123C695A
7.59	CR123C778A
8.39	CR123C867A
9.20	CR123C955A
9.93	CR123C104B
11.2	CR123C113B
12.5	CR123C125B
14.1	CR123C137B
15.5	CR123C151B
17.4	CR123C163B
19.8	CR123C180B
21.2	CR123C198B
22.7	CR123C214B
24.9	CR123C228B
27.3	CR123C250B
29.7	CR123C273B
33.2	CR123C303B
39.0	CR123C330B
45.0	CR123C366B
For CR124E (Size 3)	
17.2	CR123F181B
19.0	CR123F199B
21.0	CR123F218B
22.9	CR123F233B
24.8	CR123F243B
27.2	CR123F270B
30.0	CR123F300B
33.0	CR123F327B
36.2	CR123F357B
40.0	CR123F395B
44.0	CR123F430B
48.4	CR123F487B
53.3	CR123F567B
58.6	CR123F614B
64.4	CR123F658B
71.3	CR123F719B
78.0	CR123F772B
86.0	CR123F848B
90.0	CR123F914B

Maximum motor full-load amperes	Heater product number
For CR124F (Size 4)	
17.2	CR123F181B
19.0	CR123F199B
21.0	CR123F218B
22.9	CR123F233B
24.8	CR123F243B
27.2	CR123F270B
30.0	CR123F300B
33.0	CR123F327B
36.2	CR123F357B
40.0	CR123F395B
44.0	CR123F430B
49.6	CR123F487B
56.5	CR123F567B
64.2	CR123F614B
71.8	CR123F658B
76.4	CR123F719B
86.6	CR123F772B
94.7	CR123F848B
103	CR123F914B
115	CR123F104C
130	CR123F114C
135	CR123F118C
For CR124G (Size 5)[2]	
89	CR123F395B
93	CR123F430B
100	CR123F487B
110	CR123F567B
120	CR123F614B
132	CR123F658B
145	CR123F719B
160	CR123F772B
176	CR123F848B
191	CR123F914B
213	CR123F104C
237	CR123F114C
258	CR123F118C
270	CR123F133C

CR123K, CR123L panel mounted overload relay heaters

Heater selection

Overload relays

All CR123K and 123L heaters are packaged three to a carton. Items of these heaters, being ordered for either customer's stock or any other purpose, are to be specified in multiples of three (such as 3, 6, 9, 12, 15, etc.). Minimum order quantity is three. For CR124 single-element overloads—not mounted directly on starters.

Standard-trip overload heaters

Maximum motor full-load amperes					
CR124K (Size 1)	CR124L (Size 2)	CR124M (Size 3)	CR124N (Size 4)	CR124P (Size 5)	Heater product number
1.07	–	–	–	–	CR123K123A
1.19	–	–	–	–	CR123K135A
1.31	–	–	–	–	CR123K150A
1.45	–	–	–	–	CR123K165A
1.59	–	–	–	–	CR123K182A
1.77	–	–	–	–	CR123K200A
1.98	–	–	–	–	CR123K222A
2.21	–	–	–	–	CR123K249A
2.40	–	–	–	–	CR123K277A
2.62	–	–	–	–	CR123K301A
2.89	–	–	–	–	CR123K329A
3.17	–	–	–	–	CR123K362A
3.49	–	–	–	69.4	CR123K398A
3.82	–	–	–	76.8	CR123K438A
4.21	–	–	–	84.7	CR123K479A
4.65	4.65	–	–	99.2	CR123K527A
5.13	5.13	–	–	108	CR123K582A
5.69	5.69	–	–	120	CR123K642A
6.32	6.32	–	–	133	CR123K713A
6.99	6.99	–	–	144	CR123K791A
7.69	7.69	–	–	156	CR123K875A
8.37	8.37	–	–	167	CR123K963A
9.13	9.13	–	–	177	CR123K105B
9.96	9.96	–	–	199	CR123K114B
10.8	10.8	–	–	219	CR123K125B
11.7	11.7	–	–	242	CR123K136B
12.9	12.9	–	–	267	CR123K148B
14.1	14.1	–	–	270	CR123K163B
15.4	15.4	–	–	–	CR123K178B
16.9	16.9	–	–	–	CR123K194B
18.8	18.8	20.1	–	–	CR123K213B
20.7	20.7	22.5	–	–	CR123K236B
22.9	22.9	24.8	–	–	CR123K260B
25.5	25.5	27.3	–	–	CR123K288B
27.0	28.1	30.5	–	–	CR123K320B
–	30.9	32.2	–	–	CR123K352B
–	32.9	34.6	35.2	–	CR123K387B
–	36.2	40.9	42.7	–	CR123K425B
–	40.0	43.6	45.2	–	CR123K468B
–	45.0	45.3	48.2	–	CR123K515B
–	–	50.3	55.2	–	CR123K585B
–	–	55.8	57.2	–	CR123K650B
–	–	61.2	67.5	–	CR123K720B
–	–	67.0	69.0	–	CR123K790B
–	–	72.8	74.7	–	CR123K865B
–	–	81.4	82.4	–	CR123K940B
–	–	90.0	90.7	–	CR123K105C
–	–	–	103	–	CR123K118C
–	–	–	113	–	CR123K130C
–	–	–	125	–	CR123K143C
–	–	–	133	–	CR123K157C

Quick-trip overload heaters

Maximum motor full-load amperes					
CR124K (Size 1)	CR124L (Size 2)	CR124M (Size 3)	CR124N (Size 4)	CR124P (Size 5)	Heater product number
1.53	–	–	–	–	CR123L174A
1.68	–	–	–	–	CR123L193A
1.84	–	–	–	–	CR123L211A
2.03	–	–	–	–	CR123L232A
2.25	–	–	–	–	CR123L255A
2.47	–	–	–	–	CR123L282A
2.73	–	–	–	–	CR123L310A
3.03	–	–	–	–	CR123L343A
3.35	–	–	–	–	CR123L380A
3.69	–	–	–	73.9	CR123L420A
4.07	–	–	–	81.6	CR123L463A
4.48	–	–	–	89.6	CR123L510A
4.93	–	–	–	99.2	CR123L561A
5.43	5.43	–	–	108	CR123L618A
5.99	5.99	–	–	119	CR123L680A
6.59	6.59	–	–	131	CR123L750A
7.27	7.27	–	–	144	CR123L825A
7.99	7.99	–	–	159	CR123L910A
8.87	8.87	–	–	177	CR123L100B
9.76	9.76	–	–	194	CR123L111B
10.7	10.7	–	–	215	CR123L122B
11.6	11.6	–	–	237	CR123L135B
13.1	13.1	–	–	263	CR123L147B
14.4	14.4	–	–	270	CR123L165B
15.8	15.8	–	–	–	CR123L181B
17.5	17.5	–	–	–	CR123L199B
19.2	19.2	21.7	–	–	CR123L220B
21.1	21.1	23.7	–	–	CR123L241B
23.3	23.3	25.0	–	–	CR123L265B
25.7	25.7	29.1	–	–	CR123L293B
27.0	28.0	29.9	–	–	CR123L322B
–	31.1	32.8	–	–	CR123L352B
–	32.9	34.9	34.2	–	CR123L390B
–	35.9	37.3	38.6	–	CR123L426B
–	41.5	42.9	45.4	–	CR123L464B
–	45.0	45.9	48.3	–	CR123L520B
–	–	50.3	54.0	–	CR123L593B
–	–	55.0	57.5	–	CR123L650B
–	–	61.0	62.6	–	CR123L710B
–	–	67.1	68.3	–	CR123L787B
–	–	73.6	75.6	–	CR123L866B
–	–	82.9	88.8	–	CR123L950B
–	–	90.0	100	–	CR123L107C
–	–	–	113	–	CR123L126C
–	–	–	123	–	CR123L142C
–	–	–	133	–	CR123L155C

CR324X solid state overload relays

For panel mounting

3-pole, 600 V AC

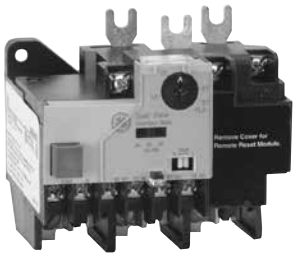

CR324X overload relay (panel-mount)

Technical features

- 2:1 Adjustable full load amps with tactile feedback dial
- Selectable 10/20/30 protection class
- Ambient insensitive within the stated operating temperature range of –20° to +70 °C
- Built-in thermal memory to prevent hot motor restarts
- Protection against complete phase current loss
- Manual reset (standard) and remote reset (optional) 120 V AC
- Accuracy: ± 2%
- Repeatability: ± 2%
- Self-powered @ 50% of minimum current range
- Size: 1-6 (0.40 A–540 A, 600 V, 50/60 Hz)
- Unbalance trip signal for PLC operation
- Manual trip
- Visual trip indication
- Standard isolated 1 NO and 1 NC aux. contact (A600, Q600)
- Built-in line/load straps
- Fits with existing 300-line starters
- Power factor correction terminals (sizes 1-4)
- DIN rail mountable sizes 1 and 2

CR324X solid state overload relays

For panel mounting

3-pole, 600 V AC

Product number selection instructions

1. Replace * in product number with appropriate digit from full load current selection table below.

Solid state overload relays

NEMA size	Continuous ampere rating	Mounting position	Product number
1	27	Panel mount	CR324CX*P
2	45	Panel mount	CR324DX*P
3, 4	90,135	Panel mount	CR324FX*P
1	27	For MRO and replacement	CR324CX*S
2	45	For MRO and replacement	CR324DX*S
3, 4	90,135	For MRO and replacement	CR324FX*S[1,2]
5	270	For MRO and replacement	CR324GX*S[3]
6	540	For MRO and replacement	CR324HX*K[4]
6	540	For MRO and replacement	CR324HX*S[5]

[1]If Product No. digit "K" is selected from Full Load Current Selection Table.
[2]Reset on CR324FX*S overloads is approximately 1" longer than on equivalent bimetal overloads. For ABB 300-line enclosures, perform the actions noted below:
[3]CR324GX*S may be used as replacement for bimetal overload on size 5 starters. Use existing CTs.
[4]CR324HX*K kit must be used as solid-state replacement for bimetal overloads on size 6, since CT ratio changes, CTs included.
[5]CR324HX*S may be used as a replacement for existing solid-state overload on size 6. Use existing CTs.

Enclosure reset extension type	Adjustment required
Threaded rod (standard)	Cut threaded shaft 1" and adjust for ⅛" gap.
"U" style, 2⅛" long	Replace extension with product number 55-512811G005.
"U" style, 1½" long	Replace extension with product number 55-512811G002.

Solid state overload relay options

Item	NEMA size	Voltage	Product number
Remote reset	1–6	120 V AC	CR324XRRM02
Panel mount adapter	1	N/A	CR324CXPMA
	2	N/A	CR324DXPMA

Full load current selection table

For continuous rated motors, with a service factor of 1.15 to 1.25, select the heater with maximum motor amperes equal to or immediately greater than the motor full-load current (provides a maximum of 125% protection). For continuous rated motors with no service factor, multiply the full-load current of the motor by 0.90 and use this value to select the heater.

Overload range for solid state starters	NEMA size	Fuse max.	Breaker max.	Insert digit in product number
0.4–0.85	00–1	3	15	C
0.8–1.7	00–1	6	15	D
1.6–3.4	00–1	12	15	E
3.2–6.8	00–1	25	25	F
6.5–13.5	00–1	50	50	G
13–27	00–1	100	100	H
6.5–13.5	2	50	50	G
13–27	2	100	100	H
25–50	2	200	200	J
17–35	3 and 4	125	125	K
35–70	3 and 4	250	250	L
65–135	3 and 4	500	400	M
35–70	5	–	–	N
65–135	5	500	400	P
130–270	5	600	800	Q
130–270	6	1200	800	S
260–540	6	1200	800	T

CR324X solid state overload relays

For panel mounting

3-pole, 600 V AC

—

Fusible combination starter short circuit ratings

Fusible combination starters and cr324x solid-state overload relays		
NEMA size	**Fuse type**	**Maximum symmetrical RMS amperes**
0–3	H, K	5,000 at 600 V
4, 5	H, K	10,000 at 600 V
0–4	J	100,000 at 600 V
0–4	RK1, RK5	65,000 at 480 V
5	J, RK1, RK5	100,000 at 600 V
6	J, L, RK1, RK5	100,000 at 600 V

—

CR324X circuit breaker combination starter short circuit ratings

CR324X circuit breaker combination starter short circuit ratings					
					Maximum symmetrical RMS amperes
Breaker type	**Rating**	**NEMA size**	**240 Volts**	**480 Volts**	**600 Volts**
TEB	15–50	0	5,000	–	–
	15–70	1	5,000	–	–
	15–100	2	5,000	–	–
	25–150	3	5,000	–	–
TEC Mag-Break® breaker	3–15	0	25,000	25,000	5,000
	3–15	1	25,000	25,000	5,000
	15–50	2	25,000	25,000	5,000
	30–100	3	25,000	25,000	5,000
	50–150	4	25,000	25,000	5,000
TEC/TECL	3–30	0	100,000	100,000	100,000
	3–50	1	100,000	100,000	100,000
	15–50	2	100,000	100,000	100,000
	30–100	3	100,000	100,000	100,000
	50–100	4	100,000	100,000	100,000
TED	15–50	0	5,000	5,000	5,000
	15–30	1	25,000	25,000	5,000
	35–70	1	5,000	5,000	5,000
	15–50	2	25,000	25,000	5,000
	60–100	2	5,000	5,000	5,000
	25–100	3	25,000	25,000	5,000
	110–150	3	5,000	5,000	5,000
TFJ, TFK and TFC THFK TJJ, TJK and TJC THJK	70–225	4	25,000	25,000	18,000
	70–225	4	25,000	25,000	18,000
	225–600	5	10,000	10,000	10,000
	225–400	5	35,000	35,000	25,000
	450–600	5	35,000	35,000	25,000
TKM, TKC THKMB TB6, TBC	300–800	6	42,000	42,000	22,000
	300–800	6	65,000	35,000	25,000
	300–800	6	65,000	65,000	42,000

—

"High available" short circuit ratings for NEMA size 00–4 contactors

NEMA size	Product series*	Max. fla [amperes]	RMS symmetrical amperes [A]	Voltage max. [V AC] [B]	Manufacturer [C]	Branch circuit protection* [D]	Max breaker rating [amps] [E]	Encl. min volume [Cu-in.] [F]
00	CR305	8	100	240	ABB	XT2	125	1399
00	CR305	8	100	480	ABB	XT2	125	1399
00	CR305	8	25	600	ABB	XT2	125	1399
0	CR305	16	100	240	ABB	XT2	125	1399
0	CR305	16	100	480	ABB	XT2	125	1399
0	CR305	16	25	600	ABB	XT2	125	1399
1	CR305	25.3	100	240	ABB	XT2	125	1399
1	CR305	25.3	100	480	ABB	XT2	125	1399
1	CR305	25.3	25	600	ABB	XT2	125	1399
2	CR305	42	100	240	ABB	XT2	125	1399
2	CR305	42	100	480	ABB	XT2	125	1399
2	CR305	42	25	600	ABB	XT2	125	1399
3	CR305	80	100	240	ABB	XT2	125	5288
3	CR305	80	100	480	ABB	XT2	125	5288
3	CR305	80	25	600	ABB	XT2	125	5288
3	CR305	80	100	240	ABB	XT4	250	5288
3	CR305	80	100	480	ABB	XT4	250	5288
3	CR305	80	25	600	ABB	XT4	250	5288
4	CR305	136	100	240	ABB	XT2	125	5288
4	CR305	136	100	480	ABB	XT2	125	5288
4	CR305	136	25	600	ABB	XT2	125	5288
4	CR305	136	100	240	ABB	XT4	250	5288
4	CR305	136	100	480	ABB	XT4	250	5288
4	CR305	136	25	600	ABB	XT4	250	5288

* These contactors are also suitable for use with instantaneous-trip circuit breakers, when used as part of Combination Motor Controllers. Click on the below link for CMC ratings https://www.ul.com/resources/short-circuit-current-ratings-combination-motor-controller-components

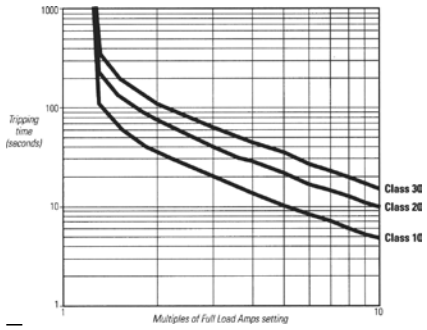

—

Tripping time (sec.) Vs. multiples of F.L.A. for ABB CR324X overload, cold state

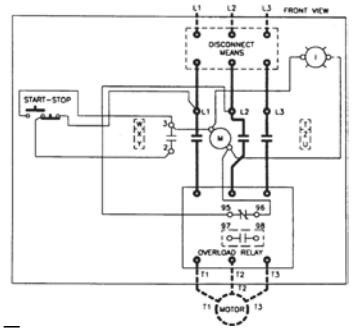

—

Typical 3-phase diagram

CR324X solid state overload relays

For panel mounting

3-pole, 600 V AC

Panel mount

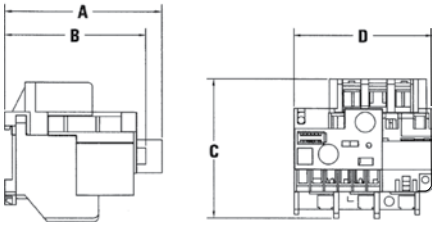

Panel mount

Size	A[1]	B	C	D
1	4.11	3.77	3.60	3.70
2	4.11	3.77	3.60	3.70
3	5.60	5.26	5.06	6.25
4	5.60	5.26	5.06	6.25

[1]If used

Open NEMA starter

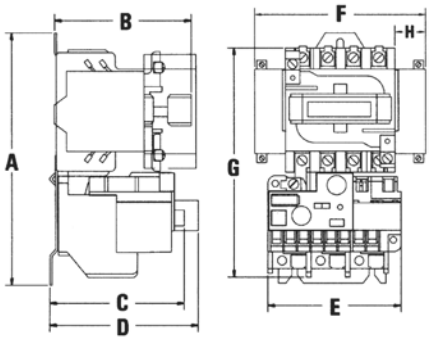

Open NEMA starter

Size	A	B	C	D[1]	E	F[1]	G	H[1]
1	7.00	3.63	3.94	3.92	3.70	4.76	6.50	.84
2	9.12	4.57	5.50	4.91	3.70	5.44	8.50	.84
3	11.62	5.32	6.50	5.66	6.24	7.50	10.62	.88
4	11.62	5.32	6.50	5.66	6.24	7.50	10.62	.88

[1]If used

Current ranges available

	0.4–0.85	0.8–1.7	1.6–3.4	3.2–6.8	6.5–13.5	13–27	25–50	17–35	35–70	65–135	130–270	260–540
Size 1	•	•	•	•	•	•						
Size 2					•	•	•					
Size 3*								•	•[2]	•[2]		
Size 4								•	•	•		
Size 5										•	•	
Size 6											•	•

[2]Size 3, 90 amps max.

CR324X solid state overload relays

For panel mounting

3-pole, 600 V AC

Outline drawings

NEMA size	Pub. #
1	55-534723
2	55-216101
3	55-216103
4	55-216103
5	55-194095
6	55-194096

Reference publications

UL File E103664	CAS File LR30821
Publication	DEP-058
Order motor starter publications from section 16	
Instructions – NEMA size 1, 2	1SQC912008M0201
Instructions – NEMA size 3, 4	GEH-6431
Instructions – NEMA size 5, 6	1SQC912018M0201

03

Manual motor starters

Manual motor starters

Manual motor starters	
CR101H, CR101Y manual motor starters, non-combination, single phase	151

CR101H, CR101Y manual motor starters

Single-phase

1 Hp maximum @ 115 V or 230 V
¾ Hp maximum @ 277 V for 2-pole forms
25-60 Hz

Open starter

Manual starter in NEMA type 1 general purpose enclosure

NEMA type 4 water- and dust-tight manual starter

The CR101H and CR101Y manual motor starters provide dependable overload protection for single-phase motors up to one horsepower (115 or 230 volts), and are the most economical starter choices where undervoltage protection is not required.

CR1062 series of manual starters are designed for infrequent starting of single-phase and polyphase motors up to ten horsepower on applications where they can be directly operated.

Application
Designed for starting and stopping single-phase motors up to 10 HP. These manual starters have provision for overload protection and their low cost provides economical starter selection for applications where no undervoltage protection is required. This line of starters may be used on such equipment as grinders, conveyors, fans, mixers, and blowers.

Features
- Terminal design; box terminals provide easy access for wiring.
- Molded plastic switch housing; protects starter mechanism.
- Small size; open starter fits GEM™ or handy box.

Product number selection instructions
Order starter by complete product number and specify overload heater as a separate item by complete product number.

Examples:
1. A general-purpose enclosed starter for surface wall mounting is desired. The starter is to break both lines. Motor to be started with this device has a full-load current of 0.6 ampere.
   Order:
   1 CR101H1 manual motor starter
   1 CR123H074A heater
2. The complete combination surface-mounted station, CR101H12, may also be ordered by components, e.g. order 1–CR101X10 flush plate; 1– CR101X14 box; and 1–CR101H manual starter. The other complete general-purpose manual starters may be broken down in this manner.

CR101H, CR101Y manual motor starters

Single-phase

1 Hp maximum @ 115 V or 230 V
¾ Hp maximum @ 277 V for 2-pole forms
25-60 Hz

CR101H, CR101Y

Open starters include an unmounted nameplate. Heaters can be selected from the table at right and ordered as a separate item. One heater is required per starter (two for 2-speed forms and for combination starter CR101H13).

Toggle-operated nonreversing open[1]

No. of poles	Product number
1	CR101Y[2]
2	CR101H[2]

[1]For flush or outlet box mounting.
[2]Units are individually boxed and "poly-packed" 10 per carton as standard.

Toggle-operated nonreversing enclosed NEMA type 13

No. of poles	Indicating light	Product number
1	No	CR101Y1[2]
2	No	CR101H1[2]
1	Yes	CR101Y11[4]
2	Yes	CR101H11[4]

[2]Units are individually boxed and "poly-packed" 10 per carton as standard.
[3]Surface mounting.
[4]Includes a 115/230-volt neon lamp(s). Not available at 277 volts.

Lever-operated nonreversing enclosed NEMA type 3/4/12

No. of poles	Hubs	Product Number
1	¾-Inch hub on one end	CR101Y400H
1	¾-Inch hub on one end	CR101H400H
2	¾-Inch hub on both ends	CR101Y400J
2	¾-Inch hub on both ends	CR101H400J

[4]Includes a 115/230-volt neon lamp(s). Not available at 277 volts.

Multi-speed enclosed NEMA type 1 surface mount

No. of poles	Indicating light	Product Number
1	None	CR101Y600B
1	Two	CR101Y610B[4]
2	None	CR101H600B
2	Two	CR101H610B[4]

[4]Includes a 115/230-volt neon lamp(s). Not available at 277 volts.

Multi-speed enclosed NEMA type 1 gray flush-plate

No. of poles	Indicating light	Product Number
1	None	CR101Y600A
1	Two	CR101Y610A[4]
2	None	CR101H600A
2	Two	CR101H610A[4]

[4]Includes a 115/230-volt neon lamp(s). Not available at 277 volts.

CR101H, CR101Y manual motor starters

Single-phase

1 Hp maximum @ 115 V or 230 V
¾ Hp maximum @ 277 V for 2-pole forms
25-60 Hz

Multi-speed enclosed NEMA type 1 stainless-steel flush-plate

No. of poles	Indicating light	Product number
1	None	CR101Y608A
1	Two	CR101Y618A[4]
2	None	CR101H608A
2	Two	CR101H618A[4]

[4]Includes a 115/230-volt neon lamp(s). Not available at 277 volts.

Combination device enclosed NEMA type 1

No. of poles	Description	Product number
2	CR101H + base unit HOA	CR101H12
2	2 (CR101H)	CR101H13

Maximum horsepower ratings — AC or DC continuous carry — 16 amperes

Product number	No. of poles	Horsepower @ 32 V AC	Horsepower @ 115 V AC	Horsepower @ 230 V AC	Horsepower @ 277 V AC	Horsepower @ 115 V DC	Horsepower @ 230 V DC
CR101Y	1	¼	1	1	—	1	¼
CR101H	2	¼	1	1	¾	1	1

Overload heater units for CR101H, Y

All CR123H heaters are packaged as single units.

The table below gives a proper size heater to trip the switch on approximately 125% motor current. Listed values are for motors with 1.15–1.25 service factor. For motors with 1.0 service factor continuously, multiply full-load current of motor by 0.9 and use this value to select heater. Contact nearest ABB Representative for recommendation on heaters to be used with definite-purpose motors. If motor full-load amperes falls between two ratings, select heater for the highest of those two. For 1.35 service factor motors, multiply full-load current of motor by 1.15 and use this value to select heater(s).

Maximum motor full-load amperes	Heater product number
.48	CR123H055A
.53	CR123H061A
.58	CR123H067A
.65	CR123H074A
.71	CR123H082A
.78	CR123H090A
.86	CR123H099A
.95	CR123H108A
1.04	CR123H120A
1.14	CR123H132A
1.25	CR123H144A
1.37	CR123H158A
1.49	CR123H172A
1.63	CR123H188A

Maximum motor full-load amperes	Heater product number
1.78	CR123H205A
1.95	CR123H224A
2.13	CR123H245A
2.32	CR123H267A
2.53	CR123H291A
2.76	CR123H317A
3.01	CR123H346A
3.27	CR123H377A
3.56	CR123H410A
3.88	CR123H446A
4.22	CR123H486A
4.60	CR123H529A
5.00	CR123H575A
5.43	CR123H625A

Maximum motor full-load amperes	Heater product number
5.90	CR123H680A
6.41	CR123H739A
6.98	CR123H802A
7.60	CR123H873A
8.25	CR123H950A
8.95	CR123H103B
9.75	CR123H112B
10.6	CR123H122B
11.4	CR123H132B
12.5	CR123H144B
13.6	CR123H157B
14.8	CR123H171B
16.0	CR123H186B

CR101H, CR101Y manual motor starters

Enclosure components

Enclosure components — single units

Flush plates painted gray or of stainless steel are available for flush mounting of all listed open manual starters.

Safety to maintenance personnel and operators and security to equipment is provided by locking attachment, CR101X3, for use on all toggle-operated manual starter forms.

Customers can assemble CR101H1, H11, Y1, or Y11 general-purpose manual starters by adding either an open CR101H or Y manual starter to a CR101X6 back and a CR101X4 or X5 cover.

	Product description	Product number
	Flush plate with 115/230-volt indicating light and screws	CR101X1
	Standard flush plate with screws	CR101X2
CR101X3 locking attachment	Locking attachment (lock not included)	CR101X3
CR101X4 enclosure components	Cover (front with 115/230-volt neon indicating light and screws)	CR101X4
	Standard cover (front with screws)	CR101X5
CR101X6 enclosure components	Enclosure back with screws (surface-mounting)	CR101X6
CR101X8 and CR101X7 stainless steel flush plates	Stainless-steel flush plate with 115/230-volt indicating light and screws	CR101X7
	Stainless-steel flush plate with screws	CR101X8

CR101H, CR101Y manual motor starters

Enclosure components

Combination plates and box

Customer convenience and flexibility is made possible by the availability of combination flush plates. These plates may be used flush mounted with a CR101X14 or other 2½- inch deep, two gang boxes to make a general-purpose surface-mounted installation. Open manual starters must be ordered separately.

	Product description	Product number
	Combination flush plate with H and-AUTO switch	CR101X10
CR101X11 enclosure components	Combination flush plate with H and-AUTO switch and 115/230-volt neon indicating light	CR101X11
	Combination flush plate for 2 — CR101 open starters	CR101X12
	Combination flush plate for 2 — CR101 open starters with 2 — 115/230-volt neon indicating lights	CR101X13
CR101X14 combination flush plate and box (back)	Box (back) for combination forms	CR101X14

CR101H, CR101Y manual motor starters

CR101 open, types 1, 4

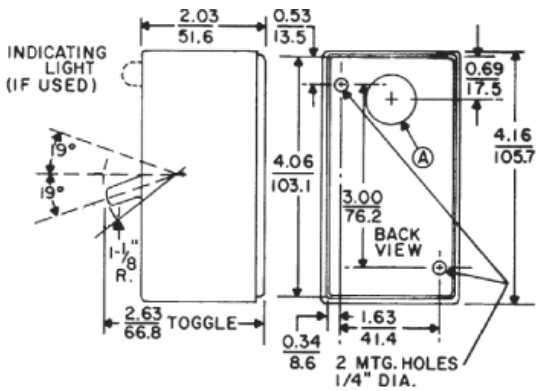

CR101 manual starter in type 1 enclosure, 2 lbs.

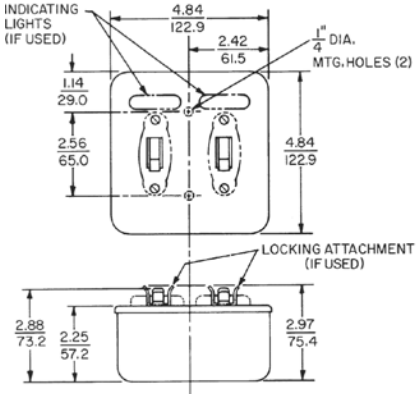

CR101H12 or CR101X13 combination starter, 4 lbs.

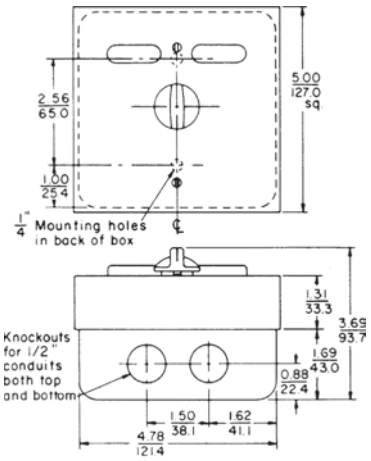

CR101 two-speed manual starter in type 1 enclosure, 3 lbs.

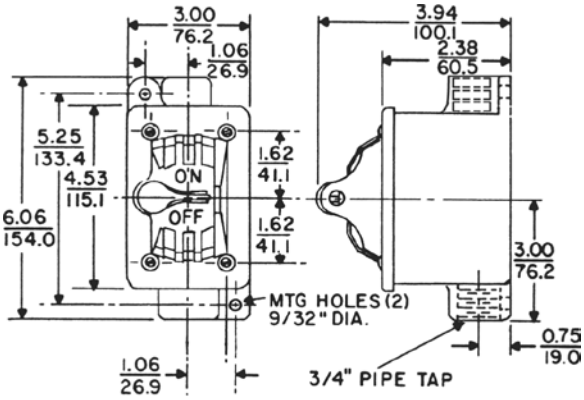

CR101 manual starter in type 4 enclosure, 4 lbs.

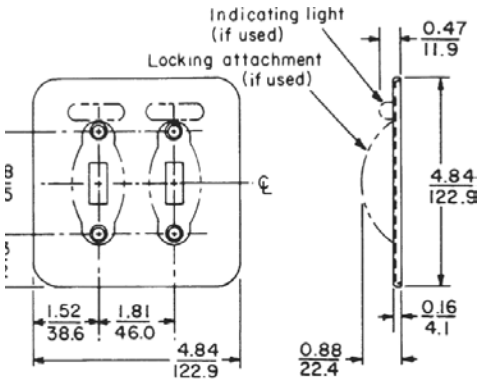

CR101X12 or CR101X13 combination flush plate, 1 lb.

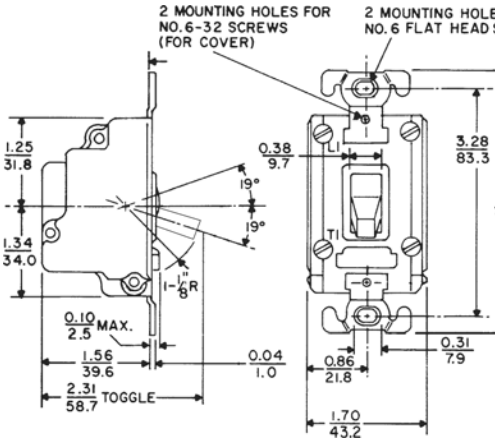

CR101 manual starter, open type, 1 lb.

Outlines, dimensions (in. / mm) and weights (for estimating only)

04

Manual starters

Manual starters

Manual starters	
CR1062 manual starters, single-phase and polyphase	160
Heaters	165

CR1062 manual starters

Single-phase and polyphase

10 Hp maximum
600 volts
25 to 60 Hz

Application

Designed for controlling small AC motors. Standard CR1062R and S starter forms provide overload protection but cannot be used where undervoltage protection is required or for remote or automatic operation.

Features

- Front-connected clamp-type terminals for easy wiring
- Trip-free overload mechanism – can't be held closed
- Knockout in enclosure cover permits installation of indicating light kit

Product number selection instructions

1. Devices may be ordered under the easy-to-use product numbering system outlined on page 163. Customers may still use the original product numbering system for devices listed on page 164.

2. Select overload relay heaters from tables on page 167. Three heaters should be specified and ordered as separate items. Packaged in quantities of three; must be ordered in multiples of three. Minimum order quantity is three. Single-phase forms require one heater, four-pole forms require two heaters and three-pole forms require three heaters.

Horsepower ratings

		Maximum horsepower ratings					
		Coil motor voltage and frequency					
						60 Hz	50 Hz
Phase	**NEMA size**	**115 V**	**200–208 V**	**230-240 V**	**277 V**	**460–600 V**	**380 V**
Single	M-0	1	–	2	2	–	–
	M-1	2	–	3	2	–	–
	M-1P	3	–	5	2	–	–
Three	M- 0	–	3	3	–	5	5
	M- 1	–	7½	7½	–	10	10

Reference publications

Instructions	1SQC912013M0201

Schematic diagrams

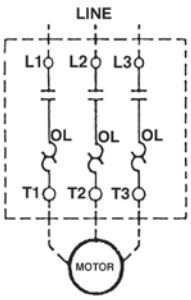

Typical 3-phase connections CR1062R and S

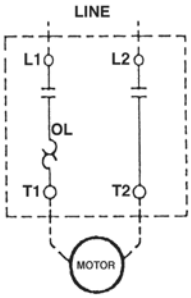

Typical single-phase connections CR1062R and S

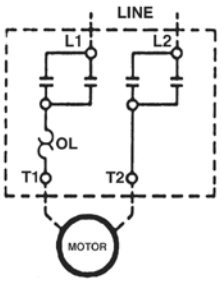

Typical single-phase connections CR1062T

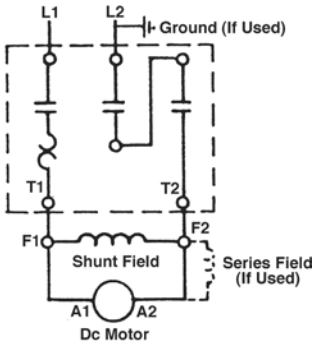

Typical connections for DC starters

CR1062 manual starters

Single-phase and polyphase

10 Hp maximum
600 volts
25 to 60 Hz

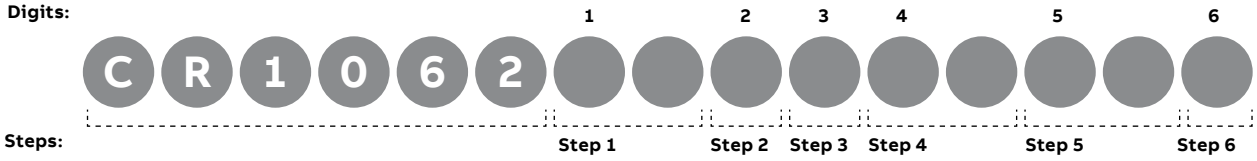

Example: CR1062S3ABT302R is a size M-1 three-phase starter with overload protection, 1 NO auxiliary contact and toggle operation in a NEMA Type 3/12/13 enclosure with a red 120 V indicating light.

1. Select NEMA size and number of poles

NEMA size	Number of poles	Product no. digits
M-0	Single-phase DC (in series)	R1
	Single-phase (AC)	R2
	3-Pole three-phase	R3
M-1	Single-phase DC (in series)	S1
	Single-phase (AC)	S2
	3-Pole three-phase	S3
M-1P	Single-phase DC (in series)	–
	Single-phase AC in parallel	T2
	3-Pole three-phase	–

2. Select protection

	Single-phase	Three-phase
Protection	Product no. digit	Product no. digit
Standard overload	A	A
Omit overload	B	B

Order heaters as a separate item from Heater Selection Tables, page 167.

3. Select auxiliary contacts

Auxiliary contacts	Size 0	Size 1	Size 1–P
	Product no. digit	Product no. digit	Product no. digitt
None	A	A	A
1 NO	B	B	B
2 NO	C	C	–

Cannot have 2 auxiliary contacts with size 1-P device.

4. Select type of operator and enclosure type

Type of operator	Enclosure class	Product no. digits
Push button	Open	P1
	Type 1	P2
	Type 3/12/13	–
	Type 4/4X	–
	Flush mounted	P5
Toggle lever	Open	T1
	Type 1	T2
	Type 3/12/13	T3
	Type 4/4X	T4
	Flush mounted	T5

No hubs installed on types 1, 3, 12, and 13 enclosures. ¾-inch hubs standard on type 4X enclosures.

5. Select protection

	Type 1 enclosure	Type 3/12/13 and 4/4X enclosures
No Indicating light	00	00
120 V/60 Hz 100 V/50 Hz	02	02
240 V/60 Hz 220 V/50 Hz	03	03
480 V/60 Hz 440 V/50 Hz	04	04
600 V/60 Hz	05	05

Order heaters as a separate item from Heater Selection Tables, page 167.

6. Select indicating light color

Indicating light color	Product no. digit
No indicating light	Ø
Red light	G
Green light	R

Enclosure kits

Description	Product number
Type 1 enclosure for toggle-operated 2- to 4-pole starters	CR1062X9
Type 1 enclosure for push button-operated 2- to 4-pole starters	CR1062X10
Type 3/12/13 enclosure (no hubs) toggle devices only	CR1062X28
Type 4x enclosure (with hubs) toggle devices only	CR1062X23
Type 1 flush-mounted enclosure for toggle-operated starters	CR1062X30
Type 1 flush-mounted enclosure for push button-operated starters	CR1062X31

Cannot have 2 auxiliary contacts with size 1-P device.

CR1062 manual starters

Single-phase and polyphase

10 Hp maximum
600 volts
25 to 60 Hz

Across-the-line forms, surface-mounted

Single-phase starters require one heater. Three-phase nonreversing starters require three heaters. Specify quantity and order as separate items. Packaged in quantities of three; must be ordered in multiples of three. Select heater(s) from tables on page 167. No hubs installed on Types 1, 3R, 12, and 13 enclosures. ¾-inch hubs standard on Type 4X enclosures.

Open

Open type

NEMA size	Motor type	Operator type	Product number
M–0	Single phase	Push button	CR1062R2AAP1000
M–1	Single phase	Push button	CR1062S2AAP1000
M–1P	Single phase	Push button	CR1062T2AAP1000
M–0	Three phase	Push button	CR1062R3AAP1000
M–1	Three phase	Push button	CR1062S3AAP1000
M–0	Single phase	Toggle	CR1062R2AAT1000
M–1	Single phase	Toggle	CR1062S2AAT1000
M–1P	Single phase	Toggle	CR1062T2AAT1000
M–0	Three phase	Toggle	CR1062R3AAT1000
M–1	Three phase	Toggle	CR1062S3AAT1000

Enclosed NEMA type 1

Type 1 surface mounting

NEMA size	Motor type	Operator type	Product number
M–0	Single phase	Push button	CR1062R2AAP2000
M–1	Single phase	Push button	CR1062S2AAP2000
M–1P	Single phase	Push button	CR1062T2AAP2000
M–0	Three phase	Push button	CR1062R3AAP2000
M–1	Three phase	Push button	CR1062S3AAP2000
M–0	Single phase	Toggle	CR1062R2AAT2000
M–1	Single phase	Toggle	CR1062S2AAT2000
M–1P	Single phase	Toggle	CR1062T2AAT2000
M–0	Three phase	Toggle	CR1062R3AAT2000
M–1	Three phase	Toggle	CR1062S3AAT2000

Enclosed NEMA type 3R/12/13

Type 1 flush mounting

NEMA size	Motor type	Operator type	Product number
M–0	Single phase	Toggle	CR1062R2AAT3000
M–1	Single phase	Toggle	CR1062S2AAT3000
M–1P	Single phase	Toggle	CR1062T2AAT3000
M–0	Three phase	Toggle	CR1062R3AAT3000
M–1	Three phase	Toggle	CR1062S3AAT3000

CR1062 manual starters

Single-phase and polyphase

10 Hp maximum
600 volts
25 to 60 Hz

Across-the-line forms, surface-mounted

Single-phase starters require one heater. Three-phase nonreversing starters require three heaters. Specify quantity and order as separate items. Packaged in quantities of three; must be ordered in multiples of three. Select heater(s) from tables on page 167. No hubs installed on Types 1, 3R, 12, and 13 enclosures. ¾-inch hubs standard on Type 4X enclosures.

Enclosed NEMA type 4/4X

Type 4-4X

NEMA size	Motor type	Operator type	Product number
M-0	Single phase	Toggle	CR1062R2AAT4000
M-1	Single phase	Toggle	CR1062S2AAT4000
M-1P	Single phase	Toggle	CR1062T2AAT4000
M-0	Three phase	Toggle	CR1062R3AAT4000
M-1	Three phase	Toggle	CR1062S3AAT4000

CR1062 manual starters

Standard

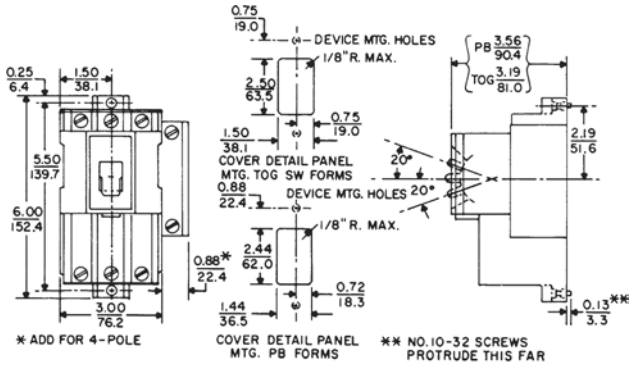

—

Open type toggle and push button operated, NEMA sizes M-0 and M-1; 2-, 3- and 4-pole; approximate shipping weight 2½ lbs.

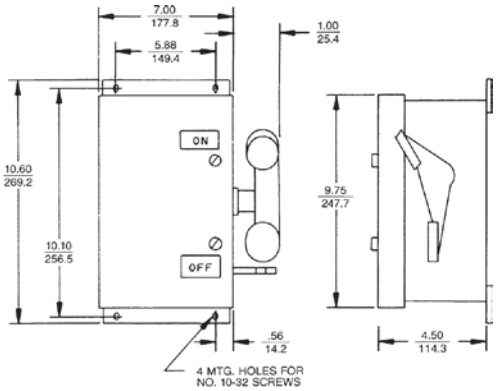

—

NEMA type 3/12/13/4/4x enclosure, NEMA sizes M-0, M-1 and M-1p; 2-, 3- and 4-pole; approximate shipping weight 6 lbs.

M-1P meets 1984 wire bending space requirements.

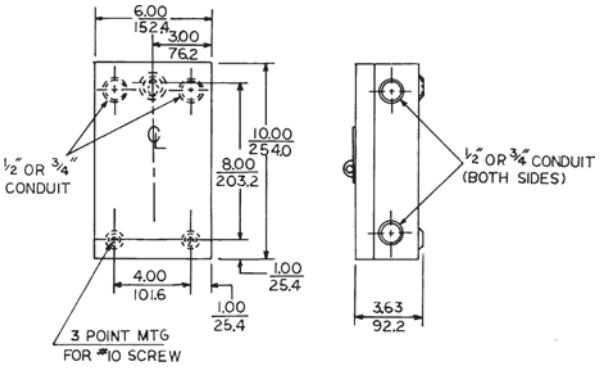

—

NEMA type 1 enclosure, NEMA sizes M-0, M-1 and M-1p; 2-, 3- and 4-pole; approximate shipping weight 4½ lbs.

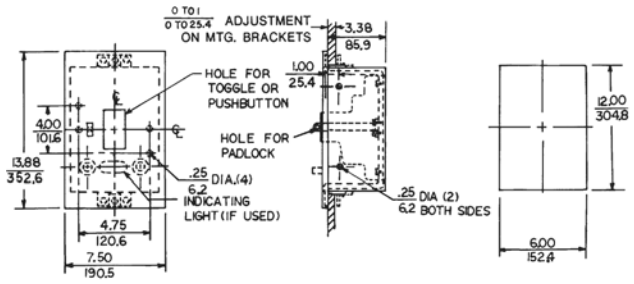

—

NEMA type 1 flush-mounted enclosure

CR1062 manual starters

Heaters

Manual starters — single-phase and polyphase

How to select heaters

Select proper maximum motor full-load motor ampere table per size, pole arrangement, and number of overload relays. One heater is required for each overload relay. If motor full-load amperes falls between two ratings, select heater for the higher rating.

The tables below give a proper size heater to trip the switch on approximately 125% motor current.

Listed values are for motors with 1.15–1.25 service factor. For motors with 1.0 service factor continuously, multiply full-load current of motor by 0.9 and use this value to select heater. Contact nearest ABB Representative for recommendation for heaters to be used with definite-purpose motors.

For 1.35 service factor motors, multiply full-load current of motor by 1.15 and use this value to select heater(s).

Heater ordering information

All CR123C and 123R heaters are packaged three to a carton. Items of these heaters, being ordered for either customer's stock or any other purpose, are to be specified in multiples of three (such as 3, 6, 9, 12, 15, etc.) Minimum order quantity is three.

Note: The National Electrical Code requires running overcurrent protection in all three lines of three-phase motors.

Heaters for CR1062R, CR1062S starters
NEMA sizes M-0, M-1, single-phase, one overload

Max. motor full-load amperes	General-use heater product number	Group fusing size M-0 only[2]	
		Heater product number	Max. fuse rating 115–230 V
0.34	CR123C036A	CR123R036A	60 A
.37	CR123C039A	CR123R039A	60 A
.42	CR123C043A	CR123R043A	60 A
.47	CR123C048A	CR123R048A	60 A
.52	CR123C054A	CR123R054A	60 A
.57	CR123C060A	CR123R060A	60 A
.63	CR123C066A	CR123R066A	60 A
.69	CR123C071A	CR123R071A	60 A
.77	CR123C078A	CR123R078A	60 A
.87	CR123C087A	CR123R087A	60 A
.97	CR123C097A	CR123R097A	60 A
1.06	CR123C109A	CR123R109A	60 A
1.18	CR123C118A	CR123R118A	60 A
1.33	CR123C131A	CR123R131A	60 A
1.47	CR123C148A	CR123R148A	60 A
1.66	CR123C163A	CR123R163A	60 A
1.78	CR123C184A	CR123R184A	60 A
2.00	CR123C196A	CR123R196A	60 A
2.18	CR123C220A	CR123R220A	60 A
2.45	CR123C239A	CR123R239A	60 A
2.76	CR123C268A	CR123R268A	60 A
3.00	CR123C301A	CR123R301A	60 A
3.27	CR123C326A	CR123R326A	60 A
3.49	CR123C356A	CR123R356A	100 A
3.86	CR123C379A	CR123R379A	100 A
4.30	CR123C419A	CR123R419A	100 A
4.88	CR123C466A	CR123R466A	100 A
5.49	CR123C526A	CR123R526A	100 A
5.85	CR123C592A	CR123R592A	100 A
6.45	CR123C630A	CR123R630A	100 A
7.22	CR123C695A	CR123R695A	100 A
8.05	CR123C778A	CR123R778A	100 A
8.88	CR123C867A	CR123R867A	100 A
9.66	CR123C955A	CR123R955A	100 A
10.5	CR123C104B	CR123C104B	100 A
11.6	CR123C113B	CR123C113B	100 A
12.7	CR123C125B	CR123C125B	100 A
13.2	CR123C137B	CR123C137B	100 A
15.1	CR123C151B	CR123C151B	100 A
16.6	CR123C163B	CR123C163B	100 A
17.6	CR123C180B	CR123C180B	100 A
19.8[1]	CR123C198B	–	–
21.1[1]	CR123C214B	–	–
23.1[1]	CR123C228B	–	–
25.2[1]	CR123C250B	–	–

[1]Size M-1 only.
[2]Does not apply to NEMA Type 7 forms.

Reference publications

Heater selection guide	GET-2681

CR1062 manual starters

Heaters

Manual starters — single-phase and polyphase

Heaters for CR1062R, CR1062S starters
NEMA sizes M-0, M-1, three-phase, three overloads

Max. motor full-load amperes	General-use heater product number	Heater product number	Group fusing size M-0 only[2] Max. fuse rating 115–230 V	460–600 V
0.29	CR123C036A	CR123R036A	60 A	30 A
.31	CR123C039A	CR123R039A	60 A	30 A
.34	CR123C043A	CR123R043A	60 A	30 A
.40	CR123C048A	CR123R048A	60 A	30 A
.44	CR123C054A	CR123R054A	60 A	30 A
.48	CR123C060A	CR123R060A	60 A	30 A
.52	CR123C066A	CR123R066A	60 A	30 A
.58	CR123C071A	CR123R071A	60 A	30 A
.64	CR123C078A	CR123R078A	60 A	30 A
.71	CR123C087A	CR123R087A	60 A	30 A
.81	CR123C097A	CR123R097A	60 A	30 A
.89	CR123C109A	CR123R109A	60 A	30 A
.98	CR123C118A	CR123R118A	60 A	30 A
1.12	CR123C131A	CR123R131A	60 A	30 A
1.22	CR123C148A	CR123R148A	60 A	30 A
1.38	CR123C163A	CR123R163A	60 A	30 A
1.48	CR123C184A	CR123R184A	60 A	30 A
1.66	CR123C196A	CR123R196A	60 A	30 A
1.80	CR123C220A	CR123R220A	60 A	30 A
2.03	CR123C239A	CR123R239A	60 A	30 A
2.28	CR123C268A	CR123R268A	60 A	30 A
2.47	CR123C301A	CR123R301A	60 A	30 A
2.71	CR123C326A	CR123R326A	60 A	30 A
2.87	CR123C356A	CR123R356A	60 A	30 A
3.18	CR123C379A	CR123R379A	60 A	30 A
3.54	CR123C419A	CR123R419A	100 A	30 A
3.89	CR123C466A	CR123R466A	100 A	30 A
4.51	CR123C526A	CR123R526A	100 A	30 A
4.90	CR123C592A	CR123R592A	100 A	30 A
5.30	CR123C630A	CR123R630A	100 A	30 A
5.94	CR123C695A	CR123R695A	100 A	30 A
6.70	CR123C778A	CR123R778A	100 A	–
7.36	CR123C867A	CR123R867A	100 A	–
7.98	CR123C955A	CR123R955A	100 A	–
8.59	CR123C104B	CR123C104B	100 A	–
9.46	CR123C113B	CR123C113B	100 A	–
10.3	CR123C125B	CR123C125B	100 A	–
11.7	CR123C137B	CR123C137B	100 A	–
12.6	CR123C151B	CR123C151B	100 A	–
13.8	CR123C163B	CR123C163B	100 A	–
15.4	CR123C180B	CR123C180B	100 A	–
16.6	CR123C198B	CR123C198B	100 A	–
17.4	CR123C214B	CR123C214B	100 A	–
19.4[1]	CR123C228B	–	–	–
20.6[1]	CR123C250B	–	–	–
22.0[1]	CR123C273B	–	–	–
25.3[1]	CR123C303B	–	–	–

[1]Size M-1 only.
[2]Does not apply to NEMA Type 7 forms.

Heaters for CR1062T starters
NEMA size M-1P, single-phase, one overload

Maximum motor full-load amperes	Heater product number
8.56	CR123C778A
9.43	CR123C867A
10.3	CR123C955A
11.0	CR123C104B
12.1	CR123C113B
13.2	CR123C125B
15.0	CR123C137B
16.2	CR123C151B
17.7	CR123C163B
19.7	CR123C180B
21.2	CR123C198B
22.2	CR123C214B
24.9	CR123C228B
26.4	CR123C250B
30.0	CR123C273B
32.7	CR123C303B
34.0	CR123C330B

Heater ordering information

All CR123C and 123R heaters are packaged three to a carton. Items of these heaters, being ordered for either customer's stock or any other purpose, are to be specified in multiples of three (such as 3, 6, 9, 12, 15, etc.) Minimum order quantity is three.

Note: The National Electrical Code requires running overcurrent protection in all three lines of three-phase motors.

05

Pumping panels

Pumping panels

Pumping panels	
CR340, CR341 pumping panels	170
Fusible disconnect type	171
With thermal overload relay	179
Mag-break type	180
Heaters	186

CR340, CR341 pumping panels

100 Hp max. @ 240 V, 600 Hp max. @ 600 V

NEMA sizes 1-7

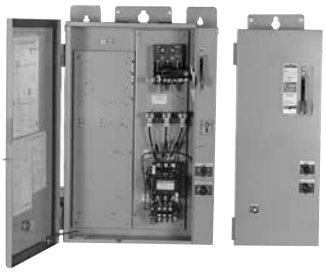

Typical CR341 pumping panels, wide case (left) and narrow case (right)

Application

Specifically designed for outdoor installation, these pumping panels provide full voltage control of squirrel-cage pump motors. They offer protection from motor burnouts due to overloading, protection against untimely restarts after power failure, and protection of the motor circuit against damage from short circuits. Enclosure provides additional space for customer to mount desired modifications and accessories. Custom panel designs available upon request. Contact nearest ABB representative or authorized distributor for additional information.

Product number selection instructions

1. The ABB pumping panels are specifically designed for outdoor installation. They provide full-voltage control of squirrel-cage pump motors. Overload, undervoltage, and short-circuit protection are included as standard.
2. ABB pumping panels are available with traditional NEMA Class 20 bimetal thermal overloads, Class 10/20/30 selectable and adjustable electronic overloads with phase loss protection and Class 10 adjustable thermal overloads with differential protection.
3. In addition, pump panels can be provided with no overload relay, Class 10 overloads with fixed heaters, adjustable trip and differential trip; standard NEMA Class 20 overload relays or the Class 10/20/30 Electronic overload relay.
4. Product notes
   Fuse clips are sized for dual element time-delay fuses. Order heaters by complete product number from tables on pages 188–189.

Reference publications

Instructions	
Instructions	1SQC912024M0201
Installation Instructions	1SQC912023M0201

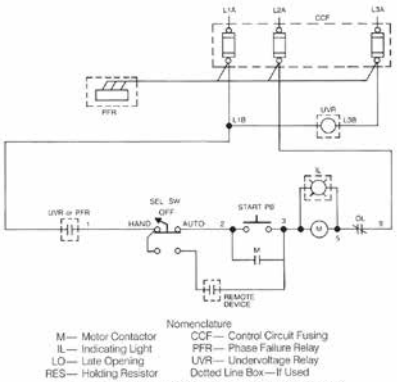

Typical CR340 and CR341, NEMA sizes 1-6

CR341 pumping panels

Fusible disconnect type

With thermal overload relay
Thermal class 20 (fuses not included except where footnoted)

Fusible disconnect
Includes complete starter with fusible switch, H-O-A selector switch, start push button, and three-leg ambient compensated overload protection in type 3R enclosure. Three heaters should be ordered as separate items. See table on page 189. Fuses are not included except where footnoted.

Mag-break and thermal magnetic
Includes complete starter with circuit breaker, H-O-A selector switch, start push button, and three-leg ambient compensated overload protection in type 3R enclosure. Three heaters should be ordered as separate items. See table on page 189. The following tables contain common product numbers. Use the selection guide starting on page 179 to select other configurations.

Class H fuse clips

Coil voltage (60 Hz)	NEMA size	Horsepower	Fuse clip rating (amps)	NEMA type 3R narrow Product number CR	NEMA type 3R wide Product number CR
230–240	1	7½	30	341K013BAA1AA	341C013BAA1AA
230–240	2	15	60	341L013CAA1AA	341D013CAA1AA
230–240	3	20	60	–	341E013CAA1AA
230–240	3	30	100	–	341E013DAA1AA
230–240	4	50	200	–	341F013EAC1AA[1]
230–240	5	60	200	–	341G013EAC1AA[1]
230–240	5	100	400	–	341G013FAC1AA[1]
460–480	2	10	30	341K014BAA1AA	341C014BAA1AA
460–480	2	15	30	341L014BAA1AA	341D014BAA1AA
460–480	2	25	60	341L014CAA1AA	341D014CAA1AA
460–480	3	30	60	–	341E014CAA1AA
460–480	3	50	100	–	341E014DAA1AA
460–480	4	60	100	–	341F014DAA1AA
460–480	4	100	200	–	341F014EAC1AA[1]
460–480	5	125	200	–	341G014EAC1AA[1]
460–480	5	200	400	–	341G014FAC1AA[1]
460–480	6	400	600	–	341H014GAD1AA[1]
460–480	7	500	1600	–	341J014NAD1AA[1]
460–480	7	600	1800	–	341J014PAD1AA[1]

For pump panel without overload, change 8th digit in product number from "1" to "4".

Class R fuse clips

Coil voltage (60 Hz)	NEMA size	Horsepower	Fuse clip rating (amps)	NEMA type 3R narrow Product number CR	NEMA type 3R wide Product number CR
230–240	1	7½	30	341K113BAA1AA	341C113BAA1AA
230–240	2	15	60	341L113CAA1AA	341D113CAA1AA
230–240	3	20	60	–	341E113CAA1AA
230–240	3	30	100	–	341E113DAA1AA
230–240	4	50	200	–	341F113EAC1AA[1]
230–240	5	60	200	–	341G113EAC1AA[1]
230–240	5	100	400	–	341G113FAC1AA[1]
460–480	1	10	30	341K114BAA1AA	341C114BAA1AA
460–480	2	15	30	341L114BAA1AA	341D114BAA1AA
460–480	2	25	60	341L114CAA1AA	341D114CAA1AA
460–480	3	30	60	–	341E114CAA1AA
460–480	3	50	100	–	341E114DAA1AA
460–480	4	60	100	–	341F114DAA1AA
460–480	4	100	200	–	341F114EAC1AA[1]
460–480	5	125	200	–	341G114EAC1AA[1]
460–480	5	200	400	–	341G114FAC1AA[1]

For pump panel without overload, change 8th digit in product number from "1" to "4".
[1]Control circuit fusing included.

CR341 pumping panels

Fusible disconnect type

With solid state overload relay
Solid state Class 10-20-30 electronic overload with adjustable setting

Includes complete starter with fusible switch (Class H clips), H-O-A selector switch, start push button, overload in a type 3R enclosure with manual reset. Horsepower ratings are based on standard NEC motor data and normal service conditions. Note: See pages 146–150 for detailed information on electronic overload relays.

The following tables contain common product numbers. Use the selection guide starting on page 178 to select other configurations.

Class H fuse clips

NEMA size	Maximum horsepower (3 phase)@ 230–240V[1]	Maximum horsepower (3 phase)@ 440–480V[1]	Fuse clip rating (amps)	Maximum fuse rating (amps)	Overload range (amps)	NEMA type 3R narrow Product number CR	NEMA type 3R wide Product number CR
1	–	–	30	3	0.4–0.85	341K0X*BAA1AAC	341C0X*BAA1AAC
1	–	0.75	30	6	0.8–1.7	341K0X*BAA1AAD	341C0X*BAA1AAD
1	0.75	2	30	10	1.6–3.4	341K0X*BAA1AAE	341C0X*BAA1AAE
1	2	3	30	25	3.2–6.8	341K0X*BAA1AAF	341C0X*BAA1AAF
1	3	7.5	30	30	6.5–13.5	341K0X*BAA1AAG	341C0X*BAA1AAG
1	7.5	10	30	30	13–27	341K0X*BAA1AAH	341C0X*BAA1AAH
2	3	7.5	30	30	6.5–13.5	341L0X*BAA1AAG	341D0X*BAA1AAG
2	7.5	20	60	60	13–27	341L0X*CAA1AAH	341D0X*CAA1AAH
2	15	25	60	60	25–50	341L0X*CAA1AAJ	341D0X*CAA1AAJ
3	10	25	60	50	17–35	–	341E0X*CAC1AAK[3]
3	25	50	60	60	35–70	–	341E0X*CAC1AAL[3]
3	30	–	60	60	65–90	–	341E0X*CAC1AAM[3]
4	10	25	200	200	17–35	–	341F0X*EAC1AAK[3]
4	25	50	200	200	35–70	–	341F0X*EAC1AAL[3]
4	50	100	200	200	65–135	–	341F0X*EAC1AAM[3]
5	50	100	200	200	65–135	–	341G0X*EAC1AAP[3]
5	100	200	400	400	130–270	–	341G0X*FAC1AAQ[3]
6	100	200	600	600	130–270	–	341H0X*GAD1AAS[3]
6	200	400	1200	1200	260–540	–	341H0X*LAD1AAT[3]

* Insert number from coil table on next page in place of asterisk in product number for voltage/frequency desired.
• NEMA sizes 1-3 rated 5,000 rms symmetrical amperes maximum.
• NEMA sizes 4 and 5 rated 10,000 rms symmetrical amperes maximum.
[1]Horsepower ratings are based on standard NEC motor data and normal service conditions.
[2]50 Hz forms are available. Contact nearest ABB Representative for proper selection.
[3]Control circuit fusing included.

CR341 pumping panels

Fusible disconnect type

With solid state overload relay
Solid state Class 10-20-30 electronic overload with adjustable setting

Includes complete starter with fusible switch (Class H clips), H-O-A selector switch, start push button, overload in a type 3R enclosure with manual reset. Horsepower ratings are based on standard NEC motor data and normal service conditions. Note: See pages 146–150 for detailed information on electronic overload relays.

The following tables contain common product numbers. Use the selection guide starting on page 178 to select other configurations.

Class R fuse clips

NEMA size	Maximum horsepower (3 phase)@ 230–240V[1]	Maximum horsepower (3 phase)@ 440–480V[1]	Fuse clip rating (amps)	Maximum fuse rating (amps)	Overload range (amps)	NEMA type 3R narrow Product number CR	NEMA type 3R wide Product number CR
1	–	–	30	3	0.4–0.85	341K1X*BAA1AAC	341C1X*BAA1AAC
1	–	0.75	30	6	0.8–1.7	341K1X*BAA1AAD	341C1X*BAA1AAD
1	0.75	2	30	10	1.6–3.4	341K1X*BAA1AAE	341C1X*BAA1AAE
1	2	3	30	25	3.2–6.8	341K1X*BAA1AAF	341C1X*BAA1AAF
1	3	7.5	30	30	6.5–13.5	341K1X*BAA1AAG	341C1X*BAA1AAG
1	7.5	10	30	30	13–27	341K1X*BAA1AAH	341C1X*BAA1AAH
2	3	7.5	30	30	6.5–13.5	341L1X*BAA1AAG	341D1X*BAA1AAG
2	7.5	20	60	60	13–27	341L1X*CAA1AAH	341D1X*CAA1AAH
2	15	25	60	60	25–50	341L1X*CAA1AAJ	341D1X*CAA1AAJ
3	10	25	60	50	17–35	–	341E1X*CAC1AAK[3]
3	25	50	60	60	35–70	–	341E1X*CAC1AAL[3]
3	30	–	60	60	65–90	–	341E1X*CAC1AAM[3]
4	10	25	200	200	17–35	–	341F1X*EAC1AAK[3]
4	25	50	200	200	35–70	–	341F1X*EAC1AAL[3]
4	50	100	200	200	65–135	–	341F1X*EAC1AAM[3]
5	50	100	200	200	65–135	–	341G1X*EAC1AAP[3]
5	100	200	400	400	130–270	–	341G1X*FAC1AAQ[3]

* Insert number from coil table below in place of asterisk in product number for voltage/frequency desired

***Coil table**
(To complete product number)

Coil number[1]	Voltage	Frequency
1	200–208 V	60 Hz
3	230–240 V	60 Hz
4	460–480 V	60 Hz
5	575–600 V	60 Hz
6	380–415 V	50 Hz

• NEMA sizes 1-3 rated 5,000 rms symmetrical amperes maximum.
• NEMA sizes 4 and 5 rated 10,000 rms symmetrical amperes maximum.
[1]Horsepower ratings are based on standard NEC motor data and normal service conditions.
[2]50 Hz forms are available. Contact nearest ABB Representative for proper selection.
[3]Control circuit fusing included.

CR341 pumping panels

Fusible disconnect type

Part number configuration
Valid for NEMA sizes 1-5

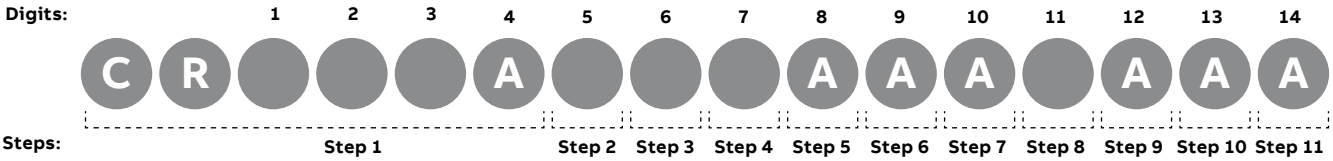

To configure the part number, use the tables below to fill in the digit boxes with the appropriate code.

Step 1 (digits 1–3) select product line code

Code	Option
340	Pump panel circuit breaker and mag break forms
341	Fused and non-fused disc forms

Step 1 (digit 4) select select NEMA size

Code	Option
C	Size 1, wide
D	Size 2, wide
E	Size 3, wide
F	Size 4, wide
G (13)	Size 5, wide
H (13)(10)	Size 6, standard
K (1)	Size 1, narrow
L (1)	Size 2, narrow

Step 2 (digit 5) select disc means

Code	Option
0	Standard IC rating (class H fuse clips / thermal CB)
1	Higher IC rating (class R fuse clips / hi break thermal CB)
2 (11)	Mag break standard IC rating (340 only)
3 (11)	Mag break higher IC rating (340 only)

Step 3 (digit 6) select overloads

Code	Option
1	Class 20 NEMA amb comp [thermal overload]
4 (11)	No overloads
X	Class 10-20-30 solid state overload (not available NEMA size 6 and 7)
Y (1)	Panel mount class 10-20-30 solid state (not available NEMA size 5 and above)

Step 4 (digit 7) select line voltage

Code	Option
1	200–208 V
3	230–240 V
4	460–480 V
5	575–600 V

CR341 pumping panels

Fusible disconnect type

Part number configuration
Valid for NEMA sizes 1-5

Step 5 (digit 8) select disconnect

Step 6 (digit 9) select timer options

Code	Option
A [6]	HOA, start (black) PB (standard)
B	HOA
C [7][5][4]	Program timer with mini door
D [7][5]	Program timer
E [7][5]	Back spin timer
K	Start (black) -stop (red) PB
L [7][5][3]	Program timer no added features

Step 6 (digit 10) select option A

code	Option
A [9]	None (STD)
B [8]	Sep control 120 V
C	Control circuit fusing (CCF)
D	CCF, Sep control 120 V
E [5]	CCF, control power transformer (CPT)
F [5]	CCF, CPT 100 VA extra

Step 6 (digit 11) select option B

Code	Option
1	None (STD)
3 [5]	Light arrestor
5 [5]	Light arrestor, surge capacitor
7 [5]	Surge capacitor

Step 6 (digit 12) select option C

code	Option
A	None (STD)
B	Unwired control circuit
D [2]	Elapsed time meter (wired across coil) — mounted on door
E [5]	Space heater (wired through NC contact)
F	1 NO aux (extra)
G	2 NO aux (extra)
H	1 NC aux (extra)
J	2 NC aux (extra)
K	1 NO and 1 NC aux (extra)
L [5]	Red and green ind light (motor on and off)
N [5]	Red ind light (motor on)
P [5]	Aux relay (2 NO, 2 NC)
S [5][2]	Elapsed time meter with NO contact — mounted on door

CR341 pumping panels

Fusible disconnect type

Part number configuration
Valid for NEMA sizes 1-5

Step 6 (digit 13) select option D

Code	Option
A	None (STD)
B [5]	Under voltage relay
C [5]	Under voltage relay and phase failure relay
D [5]	Phase failure relay

Step 7 (digit 14) select overload range

Code	Option
Blank	Class 20 O/L

Notes
(1) Panel mount EOL (option "Y" - under overloads : digit 6) is not available for narrow size pump panels (options "K" & "L" under NEMA size - digit 4)
(2) Not available with line voltages options 4, 5, 6 & 9
(3) Not available with line voltages options 5, 6 & 9
(4) Not available with line voltages options 6 & 9
(5) Not available with NEMA size options K & L
(6) HOA and start push buttons are offered as standard with options C, D, E and L
(7) Extra capacity CPT required
(8) CCF is not included with this option
(9) CCF is included when
a. Fuse clip size is more than 100 amps (option E and above)
b. Mag. only circuit breaker is more than 7 amps (option C and above)
c. Thermal circuit breaker is more than 100 amps (option P through S and A through K for size 4 through 7)
(10) Mag. break circuit breaker options "2" and "3" under digit 5 "Disconnect means" is not available with "No Over Load" option "4" under digit 6 "Over Loads" selection
(11) Higher IC ratings [digit 5] option "1" is not valid when protector rating [digit 8] equals to option "A" "Disconnect Switch Less Fuse Clips"
(12) NEMA Size 5 & 6 are labelled under UL508A
(13) Class L fuses will be provided above 600 amps disconnect

CR341 pumping panels

Fusible disconnect type

Part number configuration
Valid for NEMA sizes 1-5

Table-A: Mag break trips (340 only)

	200–208 V	230–240 V	460–480 V	575–600 V	200–208 V	230–240 V	460–480 V	575–600 V	200–208 V	230–240 V	460–480 V	575–600 V	200–208 V	230–240 V	460–480 V	575–600 V	200–208 V	230–240 V	460–480 V	575–600 V	200–208 V	230–240 V	460–480 V	575–600 V		
Trip	**NEMA size – 1**				**NEMA size – 2**				**NEMA size – 3**				**NEMA size – 4**				**NEMA size – 5**				**NEMA size – 6**				**Size – 7**	**Trip range**
A	3	3	3	3																						
B	7	7	7	7																						
C	15	15	15	15	15	15	15	15																		
D	30	30	30	30	30	30	30	30	30	30	30	30														
E					50	50	50	50	50	50	50	50	50	50	50	50										
F									100	100	100	100	100	100	100	100										
G													150	150	150	150										
H																	200	200	200	200						550-1670
J																	250	250	250	250						1000-3300
K																	300	300	300	300	300	300	300	300		1800-6000
M																	350	350	350	350	350	350	350	350	800L	3000-6000
N																	400	400	400	400	400	400	400	400	1200M	5000-10000
P																					600	600	600	600		
Q																					800	800	800	800		

Table-B: Fuse clip sizes (341 only)

							Size
Trip	**1**	**2**	**3**	**4**	**5**	**6[14]**	**7**
A[12]						Disconnect switch less fuse clips	
B	30	30					
C	60	60	60				
D		100	100	100			
E				200	200		
F					400		
G						600	
H						800	
J						1000	
L						1200	1200
M							1400
N							1600

CR341 pumping panels

Fusible disconnect type

Part number configuration
Valid for NEMA sizes 1-5

Table-C: Class 10-20-30 electronic overload

	Size						
Code	**1**	**2**	**3**	**4**	**5**	**6**	**7**
C	0.4–0.85						Not available NEMA size 7
D	0.8–1.7						
E	1.6–3.4						
F	3.2–6.8						
G	6.5–13.5	6.5–13.5					
H	13–27	13–27					
J		25–50					
K			17–35	17–35			
L			35–70	35–70			
M			65–90	65–135			
P					65–135		
Q					130–270	130–270	
T						260–540	

CR340 pumping panels

With thermal overload relay

Relay Class 20

Includes complete starter with circuit breaker, H-O-A selector switch, start push button, and three-leg ambient compensated overload protection in type 3R enclosure with manual reset. Horsepower ratings are based on standard NEC motor data and normal service conditions. All forms are UL listed and CSA certified.

The following tables contain common product numbers. Use the selection guide starting on page 184 to select other configurations.

Thermal magnetic circuit breaker type

Coil voltage (60 Hz)[1]	NEMA size	Maximum horsepower (3 phase)	CB rating (amps)	NEMA type 3R narrow Product number CR	NEMA type 3R wide Product number CR
230–240	1	2	15	340K013AAA1AA	340C013AAA1AA
230–240	1	3	20	340K013BAA1AA	340C013BAA1AA
230–240	1	5	40	340K013FAA1AA	340C013FAA1AA
230–240	1	7½	50	340K013HAA1AA	340C013HAA1AA
230–240	2	10	50	340L013HAA1AA	340D013HAA1AA
230–240	2	15	70	340L013KAA1AA	340D013KAA1AA

For pump panel without overload, change 8th digit in product number from "1" to "4".

Mag-break type

Coil voltage (60 Hz)[1]	NEMA size	Maximum horsepower (3 phase)	CB rating (amps)	NEMA type 3R narrow Product number CR	NEMA type 3R wide Product number CR
230–240	1	3	15	340K213CAC1AA	340C213CAC1AA
230–240	1	7½	30	340K213DAC1AA	340C213DAC1AA
230–240	2	15	50	340L213EAC1AA	340D213EAC1AA
230–240	3	30	100	–	340E213FAC1AA
230–240	4	50	150	–	340F213GAC1AA
230–240	5	100	400	–	340G213HAC1AA
460–480	1	7½	15	340K214CAC1AA	340C214CAC1AA
460–480	1	10	30	340K214DAC1AA	340C214DAC1AA[2]
460–480	2	25	50	340L214EAC1AA	340D214EAC1AA[2]
460–480	3	50	100	–	340E214FAC1AA[2]
460–480	4	100	150	–	340F214GAC1AA[2]
460–480	5	200	400	–	340G214HAC1AA
460–480	6	400	600	–	340H214KAD1AA
460–480	7	600	1200	–	340J214NAD1AA

For pump panel without overload, change 8th digit in product number from "1" to "4".
Example: CR340K013AAA1AA becomes CR340K043AAA1AA.
[1]50 Hz forms are available. Contact nearest ABB Representative for proper selection.
[2]Available with CL-type current limiter and UL listed 100 kA/C short-circuit rating, contact an ABB Representative for availability.
The 7th digit in the product number changes to "3".

General note:
Control circuit fusing included for mag-break type.

CR340 pumping panels

Mag-break type

With solid state overload relay
Solid state Class 10-20-30 electronic overload with adjustable setting

Includes complete starter with mag-break circuit breaker disconnect, H-O-A selector switch, start push button, overload in a type 3R enclosure with manual reset. Horsepower ratings are based on standard NEC motor data and normal service conditions. Note: See pages 157–161 for detailed information on electronic overload relays.

The following tables contain common product numbers. Use the selection guide starting on page 184 to select other configurations.

Mag-break type with thermal overload relay, solid state Class 10-20-30 electronic overload

NEMA size	Maximum horsepower (3 phase)@ 230–240 V[1]	Maximum horsepower (3 phase)@ 440–480 V[1]	Maximum CB rating (amps)	Overload range (amps)	NEMA type 3R narrow Product number CR	NEMA type 3R wide Product number CR
1	–	–	3	0.4–0.85	340K2X*CAC1AAC	340C2X*AAC1AAC
1	–	0.75	3	0.8–1.7	340K2X*CAC1AAD	340C2X*AAC1AAD
1	0.75	2	7	1.6–3.4	340K2X*CAC1AAE	340C2X*BAC1AAE
1	2	3	7	3.2–6.8	340K2X*CAC1AAF	340C2X*BAC1AAF
1	3	7.5	7	6.5–13.5	340K2X*CAC1AAG	340C2X*BAC1AAG
1	7.5	10	30	13–27	340K2X*DAC1AAH	340C2X*DAC1AAH
2	3	7.5	30	6.5–13.5	340L2X*DAC1AAG	340D2X*DAC1AAG
2	7.5	20	50	13–27	340L2X*EAC1AAH	340D2X*EAC1AAH
2	15	25	50	25–50	340L2X*EAC1AAJ	340D2X*EAC1AAJ
3	10	25	50	17–35	–	340E2X*EAC1AAK
3	25	50	100	35–70	–	340E2X*FAC1AAL
3	30	–	100	65–90	–	340E2X*FAC1AAM
4	10	25	100	17–35	–	340F2X*FAC1AAK
4	25	50	100	35–70	–	340F2X*FAC1AAL
4	50	100	150	65–135	–	340F2X*GAC1AAM
5	50	100	150	65–135	–	340G2X*GAC1AAP
5	100	200	400	130–270	–	340G2X*HAC1AAQ
6	100	200	400	130–270	–	340H2X*FAD1AAS
6	200	400	600	260–540	–	340H2X*GAD1AAT

*Insert number from coil table below in place of asterisk in product number for voltage/frequency desired

***Coil table**
(To complete product number)

Coil number	Voltage	Frequency
1	200–208 V	60 Hz
3	230–240 V	60 Hz
4	460–480 V	60 Hz
5	575–600 V	60 Hz
6	380–415 V	50 Hz

• NEMA sizes 1-3 rated 5,000 rms symmetrical amperes maximum.
• NEMA sizes 4 and 5 rated 10,000 rms symmetrical amperes maximum.
[1]Horsepower ratings are based on standard NEC motor data and normal service conditions.

General note:
Control circuit fusing included for mag-break type.

CR340 pumping panels

Mag-break circuit breaker type

Part number configuration
Valid for NEMA sizes 1-5

Step 6 (digit 13) select option D

Code	Option
A	None (STD)
B [5]	Under voltage relay
C [5]	Under voltage relay and phase failure relay
D [5]	Phase failure relay

Step 7 (digit 14) select overload range

Code	Option
Blank	Class 20 O/L

All others
See table E (page XX)

Notes
(1) Panel mount EOL (option "Y" - under overloads : digit 6) is not available for narrow size pump panels (options "K" & "L" under NEMA size - digit 4)
(2) Not available with line voltages options 4, 5, 6 & 9
(3) Not available with line voltages options 5, 6 & 9
(4) Not available with line voltages options 6 & 9
(5) Not available with NEMA size options K & L
(6) HOA and start push buttons are offered as standard with options C, D, E and L
(7) Extra capacity CPT required
(8) CCF is not included with this option
(9) CCF is included when
a. Fuse clip size is more than 100 amps (option E and above)
b. Mag. only circuit breaker is more than 7 amps (option C and above)
c. Thermal circuit breaker is more than 100 amps (option P through S and A through K for size 4 through 7)
(10) Size 6 and 7 are non-standard forms, consult sales/factory for required Eng. catalog process
(11) Mag. break circuit breaker options "2" and "3" under digit 5 "Disconnect means" is not available with "No Over Load" option "4" under digit 6 "Over Loads" selection
(12) Higher IC ratings [digit 5] option "1" is not valid when protector rating [digit 8] equals to option "A" "Disconnect Switch Less Fuse Clips"
(13) NEMA Size 5 & 6 are labelled under UL508A
(14) Class L fuses will be provided above 600 amps disconnect

Table-A: Thermal circuit breaker trips (340 only)

	200–208 V	230–240 V	460–480 V	575–600 V	200–208 V	230–240 V	460–480 V	575–600 V	200–208 V	230–240 V	460–480 V	575–600 V	200–208 V	230–240 V	460–480 V	575–600 V	200–208 V	230–240 V	460–480 V	575–600 V	200–208 V	230–240 V	460–480 V	575–600 V
Trip	**NEMA size – 1**				**NEMA size – 2**				**NEMA size – 3**				**NEMA size – 4**				**NEMA size – 5**				**NEMA size – 6**			
A			15	15													200	200	200	200	300	300	300	300
C	25	25	25	25													250	250	250	250	400	400	400	400
D																	300	300	300	300				
F	40	40			40	40	40	40					200	200	200	200	400	400	400	400	600	600	600	600
H																					800	800	800	800
J					60	60	60	60			60	60												
N									100	100	100	100			100	100								
R									125	125			125	125										

CR340 pumping panels

Mag-break circuit breaker type

Part number configuration
Valid for NEMA sizes 1-5

Table-B: Mag break trips (340 only)

	200–208 V	230–240 V	460–480 V	575–600 V	200–208 V	230–240 V	460–480 V	575–600 V	200–208 V	230–240 V	460–480 V	575–600 V	200–208 V	230–240 V	460–480 V	575–600 V	200–208 V	230–240 V	460–480 V	575–600 V	200–208 V	230–240 V	460–480 V	575–600 V
Trip	**NEMA size – 1**				**NEMA size – 2**				**NEMA size – 3**				**NEMA size – 4**				**NEMA size – 5**				**NEMA size – 6**			
A																								
B																								
C	15	15	15	15																				
D	30	30	30	30	30	30	30	30																
E					50	50	50	50	50	50	50	50												
F									100	100	100	100	100	100	100	100								
G													150	150	150	150								
H																	200	200	200	200				
J																	250	250	250	250				
K																	300	300	300	300	300	300	300	300
N																	400	400	400	400	400	400	400	400
P																					600	600	600	600
Q																					800	800	800	800

Table-C: Fuse clip sizes (341 only)

							Size
Trip	**1**	**2**	**3**	**4**	**5**	**6**[14]	**7**
A[12]						Disconnect switch less fuse clips	
B	30	30					
C	60	60	60				
D		100	100	100			
E				200	200		
F					400		
G						600	
H						800	
J						1000	
L						1200	1200
M							1400
N							1600

CR340 pumping panels

Mag-break circuit breaker type

Part number configuration
Valid for NEMA sizes 1-5

Table-D: Class 10-20-30 electronic overload

	Size						
Code	**1**	**2**	**3**	**4**	**5**	**6**	**7**
C	0.4–0.85						Not available NEMA size 7
D	0.8–1.7						
E	1.6–3.4						
F	3.2–6.8						
G	6.5–13.5	6.5–13.5					
H	13–27	13–27					
J		25–50					
K			17–35	17–35			
L			35–70	35–70			
M			65–90	65–135			
P					65–135		
Q					130–270	130–270	
T						260–540	

CR340 pumping panels

Mag-break circuit breaker type

Relay Class 20

Includes complete starter with circuit breaker, H-O-A selector switch, start push button, and three-leg ambient compensated overload protection in type 3R enclosure with manual reset. Horsepower ratings are based on standard NEC motor data and normal service conditions. All forms are UL listed and CSA certified.

The following tables contain common product numbers. Use the selection guide starting on page 184 to select other configurations.

Thermal magnetic circuit breaker type

Coil voltage (60 Hz)[1]	NEMA size	Maximum horsepower (3 phase)	CB rating (amps)	NEMA type 3R narrow Product number CR	NEMA type 3R wide Product number CR
230–240	1	2	15	340K013AAA1AA	340C013AAA1AA
230–240	1	3	20	340K013BAA1AA	340C013BAA1AA
230–240	1	5	40	340K013FAA1AA	340C013FAA1AA
230–240	1	7½	50	340K013HAA1AA	340C013HAA1AA
230–240	2	10	50	340L013HAA1AA	340D013HAA1AA
230–240	2	15	70	340L013KAA1AA	340D013KAA1AA

For pump panel without overload, change 8th digit in product number from "1" to "4".

Mag-break type

Coil voltage (60 Hz)[1]	NEMA size	Maximum horsepower (3 phase)	CB rating (amps)	NEMA type 3R narrow Product number CR	NEMA type 3R wide Product number CR
230–240	1	3	15	340K213CAC1AA	340C213CAC1AA
230–240	1	7½	30	340K213DAC1AA	340C213DAC1AA
230–240	2	15	50	340L213EAC1AA	340D213EAC1AA
230–240	3	30	100	–	340E213FAC1AA
230–240	4	50	150	–	340F213GAC1AA
230–240	5	100	400	–	340G213HAC1AA
460–480	1	7½	15	340K214CAC1AA	340C214CAC1AA
460–480	1	10	30	340K214DAC1AA	340C214DAC1AA[2]
460–480	2	25	50	340L214EAC1AA	340D214EAC1AA[2]
460–480	3	50	100	–	340E214FAC1AA[2]
460–480	4	100	150	–	340F214GAC1AA[2]
460–480	5	200	400	–	340G214HAC1AA
460–480	6	400	600	–	340H214KAD1AA
460–480	7	600	1200	–	340J214NAD1AA

For pump panel without overload, change 8th digit in product number from "1" to "4".
Example: CR340K013AAA1AA becomes CR340K043AAA1AA.
[1]50 Hz forms are available. Contact nearest ABB Representative for proper selection.
[2]Available with CL-type current limiter and UL listed 100 kA/C short-circuit rating, contact an ABB Representative for availability.
The 7th digit in the product number changes to "3".

General note:
Control circuit fusing included for mag-break type.

CR340 pumping panels

Mag-break circuit breaker type

With solid state overload relay
Solid state Class 10-20-30 electronic overload with adjustable setting

Includes complete starter with mag-break circuit breaker disconnect, H-O-A selector switch, start push button, overload in a type 3R enclosure with manual reset. Horsepower ratings are based on standard NEC motor data and normal service conditions. Note: See pages 157–161 for detailed information on electronic overload relays.

The following tables contain common product numbers. Use the selection guide starting on page 184 to select other configurations.

Mag-break type with thermal overload relay, solid state Class 10-20-30 electronic overload

NEMA size	Maximum horsepower (3 phase)@ 230–240 V[1]	Maximum horsepower (3 phase)@ 440–480 V[1]	Maximum CB rating (amps)	Overload range (amps)	NEMA type 3R narrow Product number CR	NEMA type 3R wide Product number CR
1	–	–	3	0.4–0.85	340K2X*CAC1AAC	340C2X*AAC1AAC
1	–	0.75	3	0.8–1.7	340K2X*CAC1AAD	340C2X*AAC1AAD
1	0.75	2	7	1.6–3.4	340K2X*CAC1AAE	340C2X*BAC1AAE
1	2	3	7	3.2–6.8	340K2X*CAC1AAF	340C2X*BAC1AAF
1	3	7.5	7	6.5–13.5	340K2X*CAC1AAG	340C2X*BAC1AAG
1	7.5	10	30	13–27	340K2X*DAC1AAH	340C2X*DAC1AAH
2	3	7.5	30	6.5–13.5	340L2X*DAC1AAG	340D2X*DAC1AAG
2	7.5	20	50	13–27	340L2X*EAC1AAH	340D2X*EAC1AAH
2	15	25	50	25–50	340L2X*EAC1AAJ	340D2X*EAC1AAJ
3	10	25	50	17–35	–	340E2X*EAC1AAK
3	25	50	100	35–70	–	340E2X*FAC1AAL
3	30	–	100	65–90	–	340E2X*FAC1AAM
4	10	25	100	17–35	–	340F2X*FAC1AAK
4	25	50	100	35–70	–	340F2X*FAC1AAL
4	50	100	150	65–135	–	340F2X*GAC1AAM
5	50	100	150	65–135	–	340G2X*GAC1AAP
5	100	200	400	130–270	–	340G2X*HAC1AAQ
6	100	200	400	130–270	–	340H2X*FAD1AAS
6	200	400	600	260–540	–	340H2X*GAD1AAT

*Insert number from coil table below in place of asterisk in product number for voltage/frequency desired

***Coil table**
(To complete product number)

Coil number	Voltage	Frequency
1	200–208 V	60 Hz
3	230–240 V	60 Hz
4	460–480 V	60 Hz
5	575–600 V	60 Hz
6	380–415 V	50 Hz

• NEMA sizes 1-3 rated 5,000 rms symmetrical amperes maximum.
• NEMA sizes 4 and 5 rated 10,000 rms symmetrical amperes maximum.
[1]Horsepower ratings are based on standard NEC motor data and normal service conditions.

General note:
Control circuit fusing included for mag-break type.

CR340, CR341 pumping panels

Heaters

Class 20 overload heaters

For use with polyphase motors. For continuous rated motors with a service factor of 1.15 to 1.25, select heaters from the heater table for the motor full-load amperes. This provides a maximum of 125% protection. For continuous rated motors with 1.0 service factor, multiply the full-load amperes of the motor by 0.90 and use this value to select heaters.

Ordering information

All heaters listed are packaged in multiples of three. Items of these heaters should be ordered in quantities of three-unit multiples (such as 3, 6, 9, 12, etc.). The minimum order quantity is three.

Example: (For motors with FLA of 9.28)

Item 1- 2 CR341D013C for 2 motors.

Item 1A-6 CR123C104B for starters.

Size 1 — Class 20 overload relay heaters

Motor full-load amps				
3-Phase 3-heaters	Heater product number	Max. fuse rating	Max. breaker rating	TEC/TECL rating
0.41–0.45	CR123C054A	3	–	–
0.46–0.49	CR123C060A	3	15	–
0.50–0.53	CR123C066A	3	15	–
0.54–0.59	CR123C071A	3	15	–
0.60–0.65	CR123C078A	3	15	–
0.66–0.76	CR123C087A	3	15	3
0.77–0.84	CR123C097A	3	15	3
0.85–0.93	CR123C109A	3	15	3
0.94–1.04	CR123C118A	3	15	3
1.05–1.15	CR123C131A	3	15	3
1.16–1.27	CR123C148A	3	15	3
1.28–1.39	CR123C163A	3	15	3
1.40–1.55	CR123C184A	6	15	3
1.56–1.73	CR123C196A	6	15	3
1.74–1.89	CR123C220A	6	15	3
1.90–2.05	CR123C239A	6	15	3
2.06–2.28	CR123C268A	6	15	3
2.29–2.47	CR123C301A	6	15	3
2.48–2.79	CR123C326A	10	15	7
2.80–3.31	CR123C356A	10	15	7
3.32–3.70	CR123C379A	10	15	7
3.71–4.06	CR123C419A	15	15	7
4.07–4.47	CR123C466A	15	15	7
4.48–4.95	CR123C526A	15	15	7
4.96–5.49	CR123C592A	20	20	7
5.50–5.91	CR123C630A	20	20	7
5.92–6.47	CR123C695A	25	20	15
6.48–7.20	CR123C778A	25	20	15
7.21–8.22	CR123C867A	30	30	15
8.23–8.72	CR123C955A	30	30	15
8.73–9.67	CR123C104B	35	30	15
9.68–10.4	CR123C113B	35	30	15
10.5–11.0	CR123C125B	40	40	15
11.1–12.4	CR123C137B	45	40	15
12.5–13.2	CR123C151B	50	50	15, 30
13.3–15.4	CR123C163B	60	50	30
15.5–17.1	CR123C180B	60	50	30
17.2–18.1	CR123C198B	70	50	30
18.2–20.0	CR123C214B	70	50	30
20.1–21.5	CR123C228B	80	50	30
21.6–22.5	CR123C250B	80	70	30
22.6–23.9	CR123C273B	80	70	30
24.0–26.3	CR123C303B	90	70	30, 50
26.4–27.0	CR123C330B	90	70	50

Size 2 — Class 20 overload relay heaters

Motor full-load amps				
3-Phase 3-heaters	Heater product number	Max. fuse rating	Max. breaker rating	TEC/TECL rating
5.48–5.85	CR123C630A	20	–	–
5.86–6.47	CR123C695A	20	–	–
6.48–7.35	CR123C778A	25	–	–
7.36–8.06	CR123C867A	30	–	–
8.07–9.03	CR123C955A	30	–	–
9.04–9.61	CR123C104B	35	30	15
9.62–10.5	CR123C113B	35	30	15
10.6–11.6	CR123C125B	40	40	15
11.7–12.5	CR123C137B	45	40	15
12.6–13.6	CR123C151B	50	50	15
13.7–16.7	CR123C163B	60	50	30
16.8–17.9	CR123C180B	60	50	30
18.0–18.7	CR123C198B	70	70	30
18.8–20.4	CR123C214B	80	70	30
20.5–22.7	CR123C228B	80	70	30
22.8–24.7	CR123C250B	90	70	30
24.8–26.3	CR123C273B	90	70	30
26.4–29.5	CR123C303B	100	100	30, 50
29.6–32.5	CR123C330B	100	100	50
32.6–36.7	CR123C366B	100	100	50
36.8–41.9	CR123C400B	100	100	50
42.0–43.2	CR123C440B	100	100	50
43.3–45.0	CR123C460B	100	100	–

CR340, CR341 pumping panels

Heaters

Class 20 overload heaters (continued)

See page 188 for ordering information.

Size 3 — standard or ambient compensated Class 20 overload relay heaters

Motor full-load amps				
3-Phase 3-heaters	Heater product number	Max. fuse rating	Max. breaker rating	TEC/TECL rating
17.4–18.4	CR123F233B	70	70	30
18.5–21.1	CR123F243B	80	70	30
21.2–22.1	CR123F270B	80	70	30
22.2–26.1	CR123F300B	90	70	30
26.2–28.0	CR123F327B	100	100	50
28.1–31.3	CR123F357B	100	100	50
31.4–33.3	CR123F395B	100	100	50
33.4–34.3	CR123F430B	100	100	50
34.4–40.9	CR123F487B	100	100	50
41.0–44.7	CR123F567B	100	100	50, 100
44.8–51.0	CR123F614B	100	125	100
51.1–52.0	CR123F658B	100	125	100
52.1–55.4	CR123F719B	100	125	100
55.5–63.3	CR123F772B	100	150	100
63.4–66.1	CR123F848B	100	150	100
66.2–73.5	CR123F914B	100	150	100
73.6–82.2	CR123F104C	100	150	100
82.3–90.0	CR123F114C	100	150	100

Size 4 — Class 20 overload relay heaters

Motor full-load amps				
3-Phase 3-heaters	Heater product number	Max. fuse rating	Max. breaker rating	TEC/TECL rating
28.8–31.1	CR123F357B	110	100	50
31.2–33.3	CR123F395B	125	100	50
33.4–35.6	CR123F430B	125	100	50
35.7–42.6	CR123F487B	150	100	50, 100
42.7–45.2	CR123F567B	175	125	50, 100
45.3–51.1	CR123F614B	175	150	100
51.2–53.9	CR123F658B	200	150	100
54.0–56.9	CR123F719B	200	150	100
57.0–65.2	CR123F772B	200	175	100
65.3–68.6	CR123F848B	200	200	100
68.7–74.0	CR123F914B	200	200	100
74.1–86.0	CR123F104C	200	200	100, 150
86.1–90.7	CR123F114C	200	225	150
90.8–103	CR123F118C	200	225	150
104–109	CR123F133C	200	225	150
110–119	CR123F149C	200	225	150
120–131	CR123F161C	200	225	150
132–135	CR123F174C	200	225	150

Size 5 — Class 20 overload relay heaters

Motor full-load amps			
3-Phase 3-heaters	Heater product number	Max. fuse rating	Maximum circuit rating
109–118	CR123C592A	400	600
119–128	CR123C630A	400	600
129–138	CR123C695A	400	600
139–155	CR123C778A	400	600
156–168	CR123C867A	400	600
169–184	CR123C955A	400	600
185–200	CR123C104B	400	600
201–221	CR123C113B	400	600
222–237	CR123C125B	400	600
238–262	CR123C137B	400	600
263–270	CR123C151B	400	600

Size 6 — Class 20 overload relay heaters

Motor full-load amps	
3-Phase 3-heaters	Heater product number
181–197	CR123C220A
198–214	CR123C239A
215–238	CR123C268A
239–258	CR123C301A
259–290	CR123C326A
291–346	CR123C356A
347–387	CR123C379A
388–424	CR123C419A
425–467	CR123C466A
468–516	CR123C526A
517–540	CR123C592A

Size 7 — Class 20 overload relay heaters

Motor full-load amps	
3-Phase 3-heaters	Heater product number
346–387	CR123C326A
388–461	CR123C356A
462–515	CR123C379A
516–565	CR123C419A
566–622	CR123C466A
623–688	CR123C526A
689–763	CR123C592A
764–810	CR123C630A

CR340, CR341 pumping panels

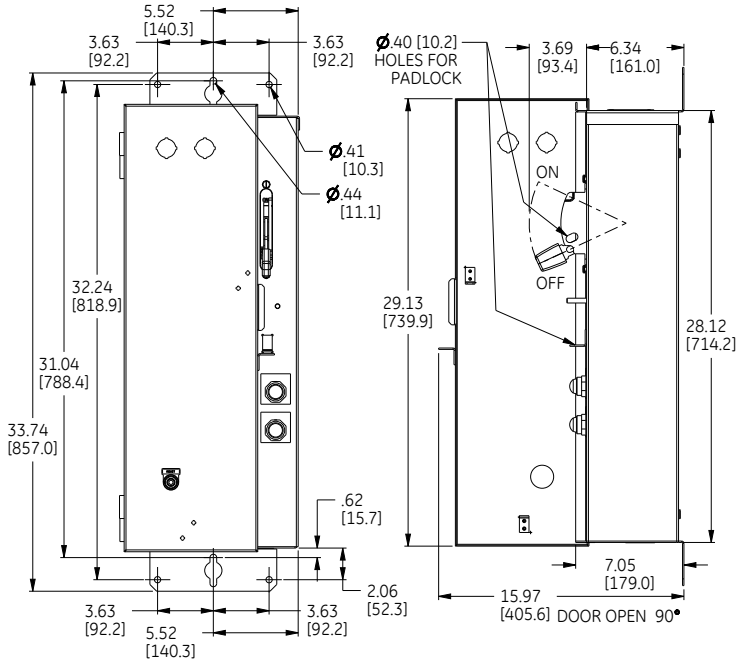

CR340, CR341 NEMA sizes 1 and 2 narrow-type enclosures; 32 lbs. (size 1), 47 lbs. (size 2)

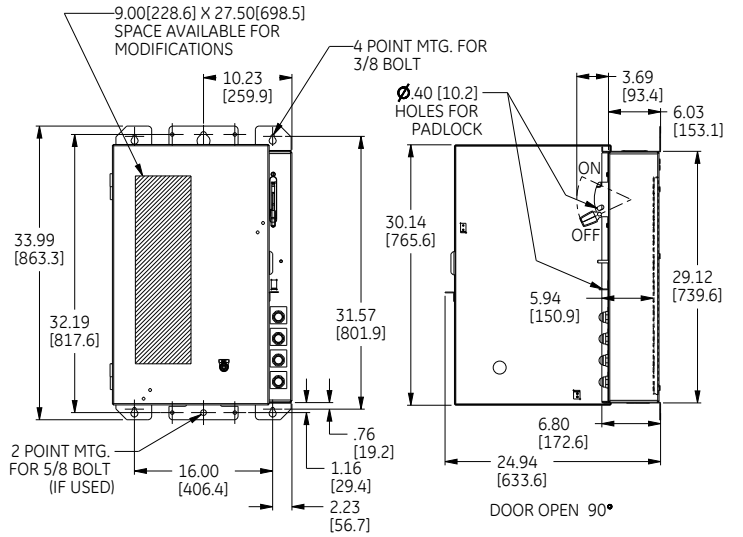

CR340, CR341 NEMA sizes 1 and 2 wide-type enclosures; 85 lbs. (size 1), 90 lbs. (size 2)

CR340, CR341 pumping panels

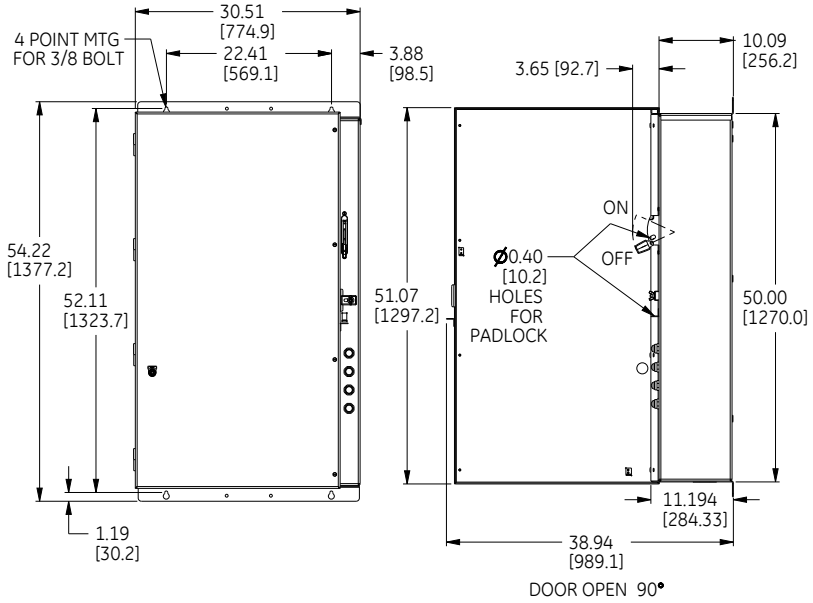

CR340, CR341 NEMA sizes 3 and 4 wide-type enclosures; 195 lbs.

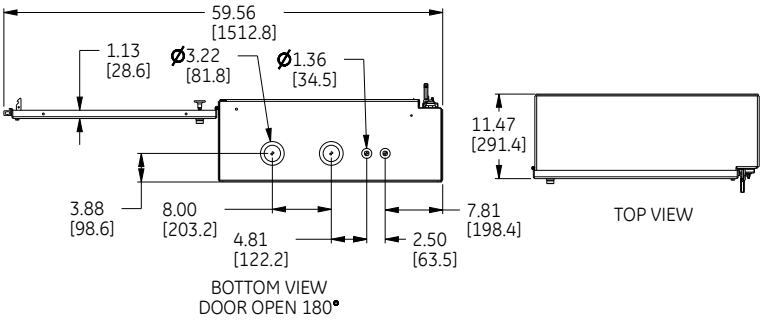

CR340, CR341 NEMA size 5 wide-type enclosures; 285 lbs.

CR340, CR341 pumping panels

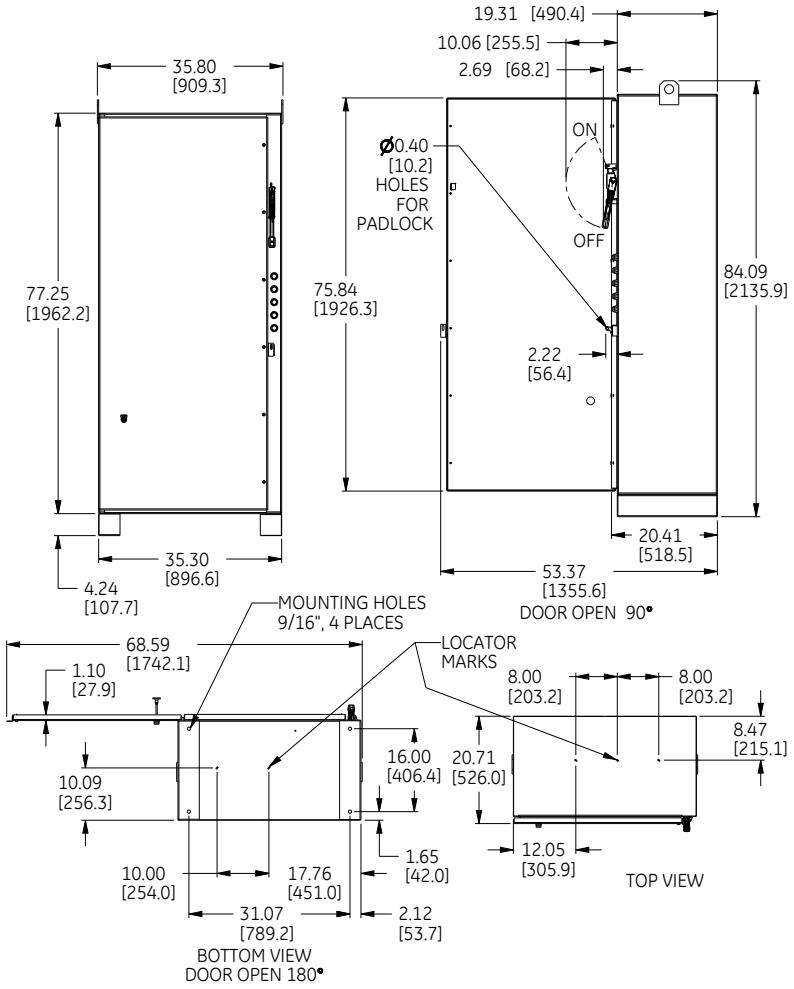

—
CR340, CR341 NEMA sizes 6 and 7 wide-type enclosures; 1,200 lbs. (size 6), 1,300 lbs. (size 7)

06

Magnetic contactors

Magnetic contactors

Magnetic contactors	
CR305, CR385 magnetic contactors	194
Magnetic contactors factory-installed modifications	200
Magnetic contactors field-installed kits, modifications	205

CR305, CR385 magnetic contactors

400 Hp maximum

NEMA sizes 00-6
600 V maximum 50/60 Hz
600 amperes maximum

Typical cr305 open-type magnetic contactor

Application

ABB's magnetic contactor is designed for use on today's modern equipment. Especially suitable for handling the switching of resistance heating and capacitor circuit loads, their compact size also fits the needs of the panel building industry. In addition, they may be used for controlling AC motors where overload protection is provided separately.

Features

- Easy disassembly for maintenance and inspection of contacts.
- Auxiliary contacts with vertical contact surfaces enclosed to prevent accumulation of dust and dirt.
- Attractive, modern squared-off design enclosure.
- Magnet faces specially treated to resist rust.
- Provision for ring terminals may be specified as a special feature, if required. No price addition applies for this optional feature.

Product number selection instructions

1. Specify contactor by product number.
   Example: CR305B103 is a size 0, 18-ampere, three-pole contactor (extra pole to be used as an auxiliary), with 230-240 volt 60 Hz coil. Contactor is in type 1 enclosure.
2. Order forms not listed or with special features by complete description.
   Example: Similar to CR305B103 except with a red indicating light in cover.
3. The final letter of the product number denotes extra auxiliary contacts (sometimes referred to as auxiliary interlocks). Order the desired extra auxiliary contacts by replacing the final letter from first column of auxiliary interlock table (see page 120).
   Example: CR305C102AAB is size 1 contactor with one extra auxiliary contact, normally open.
4. Contactors are available with coils of other ratings (at same price) than those shown on pages 197–201. Refer to coil suffix table on page 8 for information. To order contactor forms with these other coil ratings, insert suffix from table in place of fifth and sixth numbers of contactor product number shown on pages 197–201.
   Example: A CR305C123 NEMA size 1, three-pole contactor in Type 1 enclosure, except with 24 volt, 60 Hz coil, becomes a CR305C124 product number.
5. Holding contacts
   Each CR305 contactor is furnished with a normally open auxiliary contact for use as a holding interlock in three-wire control circuits. This auxiliary contact has the same rating as a main pole (contact) for sizes 00, 0, and 1. If this contact is not required on these sizes, specify contactor with one less pole.
6. 50 Hz contactors
   See three-phase horsepower ratings for 380-415 volts, 50 Hz on page 6.
7. Product notes
   Motor full-load current should not exceed continuous ampere rating of contactor.

Reference publications

Instructions	
NEMA size	**Publication number**
00, 0, 1	1SQC912006M0201
2	1SQC912001M0201
3	1SQC912003M0201
4	1SQC912004M0201
5	1SQC912028M0201
6	1SQC912029M0201

CR305, CR385 magnetic contactors

Single-phase, one- and two-pole

Nonreversing, open, NEMA type 1, 3R, 12, 4/4X
NEMA sizes 00-6
600 volts maximum 50/60 Hz

One- and two-pole:

Includes holding contact (normally open) and pressure terminals for the line and load connections on NEMA sizes 0-8 in types 1, 3R, 12 and 4/4X enclosure, and open type NEMA sizes 00-5. Open type, NEMA sizes 6-8 are supplied with bus bar type connections only.

However, pressure box terminals are available, if required, and can be ordered by description, using the terminology: "Similar to (a listed product number) except with pressure box terminals." All NEMA size 9 contactor forms are furnished with bus bar type connections only as standard.

CR305, single-phase, 1-pole magnetic contactors NEMA sizes 00-1

NEMA size	Continuous ampere rating[1] Enclosed	Open	Voltage @ 60 Hz	Horsepower	Open type Product number CR305	NEMA type 1 Product number CR305	NEMA type 3R Product number CR305	NEMA type 12 Product number CR305	NEMA type 4/4X Product number CR305
00	9 A	10 A	115–120	⅓	Use NEMA size 0	Use NEMA size 0	–	–	–
00	9 A	10 A	230–240	1	Use NEMA size 0	Use NEMA size 0	–	–	–
0	18 A	20 A	115–120	1	J002ADA	J102ADA	–	–	–
0	18 A	20 A	230–240	2	J003ADA	J103ADA	–	–	–
1	27 A	30 A	115–120	2	K002ADA	K102ADA	–	–	K402ADA
1	27 A	30 A	230–240	3	K003ADA	K103ADA	–	–	K403ADA

CR305, single-phase, 2-pole magnetic contactors NEMA sizes 00-6

NEMA size	Continuous ampere rating[1] Enclosed	Open	Voltage @ 60 Hz	Horsepower	Open type Product number CR305	NEMA type 1 Product number CR305	NEMA type 3R Product number CR305	NEMA type 12 Product number CR305	NEMA type 4/4X Product number CR305
00	9 A	10 A	115–120	⅓	H002	H102	Use NEMA size 0	Use NEMA size 0	Use NEMA size 0
00	9 A	10 A	230–240	1	H003	H103	Use NEMA size 0	Use NEMA size 0	Use NEMA size 0
0	18 A	20 A	115–120	1	J002	J102	J602	J202	J402
0	18 A	20 A	230–240	2	J003	J103	J603	J203	J403
1	27 A	30 A	115–120	2	K002	K102	K602	K202	K402
1	27 A	30 A	230–240	3	K003	K103	K603	K203	K403
2	45 A	50 A	115–120	3	L002	L102	L602	L202	L402
2	45 A	50 A	230–240	7½	L003	L103	L603	L203	L403
3	90 A	100 A	115–120	7½	M002	M102	M602	M202	M402
3	90 A	100 A	230–240	15	M003	M103	M603	M203	M403
3	90 A	100 A	460–480	25	M004	M104	M604	M204	M404
3	90 A	100 A	575–600	25	M005	M105	M605	M205	M405
4	135 A	150 A	115–120	–	N002	N102	N602	N202	N402
4	135 A	150 A	200–208	–	N023	N123	N623	N223	N423
4	135 A	150 A	230–240	–	N003	N103	N603	N203	N403
4	135 A	150 A	460–480	–	N004	N104	N604	N204	N404
4	135 A	150 A	575–600	–	N005	N105	N605	N205	N405
5	270 A	300 A	115–120	–	P002	P102	P602	P202	P402
5	270 A	300 A	200–208	–	P023	P123	P623	P223	P423
5	270 A	300 A	230–240	–	P003	P103	P603	P203	P403
5	270 A	300 A	460–480	–	P004	P104	P604	P204	P404
5	270 A	300 A	575–600	–	P005	P105	P605	P205	P405
6	540 A	600 A	115–120	–	HR002	HR102AA2A	HR602AA2A	HR202AA2A	HR402AA2A
6	540 A	600 A	200–208	–	HR023	HR123AA2A	HR623AA2A	HR223AA2A	HR423AA2A
6	540 A	600 A	230–240	–	HR003	HR103AA2A	HR603AA2A	HR203AA2A	HR403AA2A
6	540 A	600 A	460–480	–	HR004	HR104AA2A	HR604AA2A	HR204AA2A	HR404AA2A
6	540 A	600 A	575–600	–	HR005	HR105AA2A	HR605AA2A	HR205AA2A	HR405AA2A

CR305, CR385 magnetic contactors

Single-phase, one- and two-pole

Nonreversing, open, NEMA type 1, 3R, 12, 4/4X
NEMA sizes 00-6
600 volts maximum 50/60 Hz

One- and two-pole:

Includes holding contact (normally open) and pressure terminals for the line and load connections on NEMA sizes 0-8 in types 1, 3R, 12 and 4/4X enclosure, and open type NEMA sizes 00-5. Open type, NEMA sizes 6-8 are supplied with bus bar type connections only.

However, pressure box terminals are available, if required, and can be ordered by description, using the terminology: “Similar to (a listed product number) except with pressure box terminals.” All NEMA size 9 contactor forms are furnished with bus bar type connections only as standard.

CR305, CR385 magnetic contactors

Three-phase, three-pole

Nonreversing, open, NEMA type 1, 3R, 12, 4/4X
NEMA sizes 00-9
600 volts maximum 50/60 Hz

Three-pole:

Includes holding contact (normally open) and pressure terminals for the line and load connections on all NEMA sizes 00-5. All NEMA size 6-9 contactor forms are furnished with bus bar type connections only as standard.

CR305, three-phase, 3-pole magnetic contactors NEMA sizes 00-6

	Continuous ampere rating[1]				Open type	NEMA type 1	NEMA type 3R	NEMA type 12	NEMA type 4/4X
NEMA size	Enclosed	Open	Voltage @ 60 Hz	Horsepower	Product number CR305	Product number CR305	Product number CR305	Product number CR305	Product number CR305
00	9A	10A	115-120	–	A002	A102	Use NEMA size 0	Use NEMA size 0	Use NEMA size 0
00	9A	10A	200-208	1½	A023	A123	Use NEMA size 0	Use NEMA size 0	Use NEMA size 0
00	9A	10A	230-240	1½	A003	A103	Use NEMA size 0	Use NEMA size 0	Use NEMA size 0
00	9A	10A	460-480	2	A004	A104	Use NEMA size 0	Use NEMA size 0	Use NEMA size 0
00	9A	10A	575-600	2	A005	A105	Use NEMA size 0	Use NEMA size 0	Use NEMA size 0
0	18A	20A	115-120	–	B002	B102	B602	B202	B402
0	18A	20A	200-208	3	B023	B123	B623	B223	B423
0	18A	20A	230-240	3	B003	B103	B603	B203	B403
0	18A	20A	460-480	5	B004	B104	B604	B204	B404
0	18A	20A	575-600	5	B005	B105	B605	B205	B405
1	27A	30A	115-120	–	C002	C102	C602	C202	C402
1	27A	30A	200-208	7½	C023	C123	C623	C223	C423
1	27A	30A	230-240	7½	C003	C103	C603	C203	C403
1	27A	30A	460-480	10	C004	C104	C604	C204	C404
1	27A	30A	575-600	10	C005	C105	C605	C205	C405
2	45A	50A	115-120	–	D002	D102	D602	D202	D402
2	45A	50A	200-208	10	D023	D123	D623	D223	D423
2	45A	50A	230-240	15	D003	D103	D603	D203	D403
2	45A	50A	460-480	25	D004	D104	D604	D204	D404
2	45A	50A	575-600	25	D005	D105	D605	D205	D405
3	90A	100A	115-120	–	E002	E102	E602	E202	E402
3	90A	100A	200-208	25	E023	E123	E623	E223	E423
3	90A	100A	230-240	30	E003	E103	E603	E203	E403
3	90A	100A	460-480	50	E004	E104	E604	E204	E404
3	90A	100A	575-600	50	E005	E105	E605	E205	E405
4	135A	150A	115-120	–	F002	F102	F602	F202	F402
4	135A	150A	200-208	40	F023	F123	F623	F223	F423
4	135A	150A	230-240	50	F003	F103	F603	F203	F403
4	135A	150A	460-480	100	F004	F104	F604	F204	F404
4	135A	150A	575-600	100	F005	F105	F605	F205	F405
5	270A	300A	115-120	–	G002	G102	G602	G202	G402
5	270A	300A	200-208	75	G023	G123	G623	G223	G423
5	270A	300A	230-240	100	G003	G103	G603	G203	G403
5	270A	300A	460-480	200	G004	G104	G604	G204	G404
5	270A	300A	575-600	200	G005	G105	G605	G205	G405
6	540A	600A	115-120	–	HH002	HH102AA2A	HH602AA2A	HH202AA2A	HH402AA2A
6	540A	600A	200-208	150	HH023	HH123AA2A	HH623AA2A	HH223AA2A	HH423AA2A
6	540A	600A	230-240	200	HH003	HH103AA2A	HH603AA2A	HH203AA2A	HH403AA2A
6	540A	600A	460-480	400	HH004	HH104AA2A	HH604AA2A	HH204AA2A	HH404AA2A
6	540A	600A	575-600	400	HH005	HH105AA2A	HH605AA2A	HH205AA2A	HH405AA2A

CR305, CR385 magnetic contactors

Three-phase, three-pole

Nonreversing, open, NEMA type 1, 3R, 12, 4/4X
NEMA sizes 00-9
600 volts maximum 50/60 Hz

Three-pole:

Includes holding contact (normally open) and pressure terminals for the line and load connections on all NEMA sizes 00-5. All NEMA size 6-9 contactor forms are furnished with bus bar type connections only as standard.

CR305, CR385 magnetic contactors

Three-phase, three-pole

Nonreversing, open, NEMA type 1, 3R, 12, 4/4X
NEMA sizes 00-9
600 volts maximum 50/60 Hz

Four-pole:

Includes holding contact (normally open) and pressure terminals for the line and load connector.

CR305, three-phase, 4-pole magnetic contactors NEMA sizes 00-5

	Continuous ampere rating[1]				Open type	NEMA type 1	NEMA type 3R	NEMA type 12	NEMA type 4/4X
NEMA size	Enclosed	Open	Voltage @ 60 Hz	Horsepower	Product number CR305	Product number CR305	Product number CR305	Product number CR305	Product number CR305
0	18 A	20 A	115–120	–	R002AEA	R102AEA	R602AEA	R202AEA	R402AEA
0	18 A	20 A	200–208	3	R023AEA	R123AEA	R623AEA	R223AEA	R423AEA
0	18 A	20 A	230–240	3	R003AEA	R103AEA	R603AEA	R203AEA	R403AEA
0	18 A	20 A	460–480	5	R004AEA	R104AEA	R604AEA	R204AEA	R404AEA
0	18 A	20 A	575–600	5	R005AEA	R105AEA	R605AEA	R205AEA	R405AEA
1	27 A	30 A	115–120	–	S002AEA	S102AEA	S602AEA	S202AEA	S402AEA
1	27 A	30 A	200–208	7½	S023AEA	S123AEA	S623AEA	S223AEA	S423AEA
1	27 A	30 A	230–240	½	S003AEA	S103AEA	S603AEA	S203AEA	S403AEA
1	27 A	30 A	460–480	10	S004AEA	S104AEA	S604AEA	S204AEA	S404AEA
1	27 A	30 A	575–600	10	S005AEA	S105AEA	S605AEA	S205AEA	S405AEA
2	45 A	50 A	115–120	–	T002	T102	T602	T202	T402
2	45 A	50 A	200–208	10	T023	T123	T623	T223	T423
2	45 A	50 A	230–240	15	T003	T103	T603	T203	T403
2	45 A	50 A	460–480	25	T004	T104	T604	T204	T404
2	45 A	50 A	575–600	25	T005	T105	T605	T205	T405
3	90 A	100 A	115–120	–	U002	U102	U602	U202	U402
3	90 A	100 A	200–208	25	U023	U123	U623	U223	U423
3	90 A	100 A	230–240	30	U003	U103	U603	U203	U403
3	90 A	100 A	460–480	50	U004	U104	U604	U204	U404
3	90 A	100 A	575–600	50	U005	U105	U605	U205	U405
4	135 A	150 A	115–120	–	W002	W102	W602	W202	W402
4	135 A	150 A	200–208	40	W023	W123	W623	W223	W423
4	135 A	150 A	230–240	50	W003	W103	W603	W203	W403
4	135 A	150 A	460–480	100	W004	W104	W604	W204	W404
4	135 A	150 A	575–600	100	W005	W105	W605	W205	W405
5	270 A	300 A	115–120	–	Z002	Z102	Z602	Z202	Z402
5	270 A	300 A	200–208	75	Z023	Z123	Z623	Z223	Z423
5	270 A	300 A	230–240	100	Z003	Z103	Z603	Z203	Z403
5	270 A	300 A	460–480	200	Z004	Z104	Z604	Z204	Z404
5	270 A	300 A	575–600	200	Z005	Z105	Z605	Z205	Z405

[1]Motor full-load current should not exceed continuous ampere rating of contactor.

CR305, CR385 magnetic contactors

Factory-installed modifications

Contactor modifications — factory installed

Factory-installed modifications are available for those contactors as indicated in the tables. Shown here are the additions to standard product listed forms. For field modification kits see pages 207–216. Supplying combinations of these items may affect standard enclosure dimensions and type of construction. In extreme instances, it may not be possible to furnish all of them within the limitations of a contactor design.

Type of installation/ contactors	Item no.	Modifications	Enclosure type
Pilot devices mounted in cover or flange of CR305	1	Push buttons	–
	1a	Start-stop[1]	1
	1b	Off-on[1]	1
	1c	Start-stop (heavy-duty, CR104P)	Any
	1d	Start push button and H-O-A selector switch (heavy-duty, CR104P)	Any
	1e	Single push button, unwired (specify marking) (heavy-duty, CR104P)	1
		Single push button, unwired (specify marking) (heavy-duty, CR104P)	Any
	1f	Single illuminated push button, unwired (specify marking) (heavy-duty, CR104P)	Any
	2	Selector switches	–
	2a	H and-off-auto[1,3]	1
		H and-off-auto[1,3] (heavy-duty, CR104P)	Any
	2b	Off-on[1]	1
		Off-on (heavy-duty, CR104P)	Any
	2c	Single selector switch maintained (specify marking)	–
		Two- or three-position (specify position)[4] (heavy-duty, CR104P)	Any
		Four-position[4] (heavy-duty, CR104P)	Any
	2d	Key operated maintained (specify marking and key-removal position)	–
		Two- or three-position[4] (heavy-duty, CR104P)	Any
	3	Nonstandard markings (specify)	Any

[1]Factory-installed modification kit for sizes 00-5.
[2]Not available in NEMA size 00. Use Size 0 starter and modification.
[3]This modification not available with items 1a, 1b or 1c because stop push button would not work in auto position; instead order modification 1d.
[4]Specify CR104 operator and contact block by product number.

Reference publications

Instructions	
NEMA size	**Publication number**
00, 0, 1	1SQC912006M0201
2	1SQC912001M0201
3	1SQC912003M0201
4	1SQC912004M0201
5	1SQC912028M0201
6	1SQC912029M0201

CR305, CR385 magnetic contactors

Factory-installed modifications

Contactor modifications — factory installed

The general information at the top of page 202, regarding factory-installed modifications, also applies to those listed in the tables below.

Type of installation/ contactors	Item no.	Modifications	Enclosure type
Pilot devices mounted in cover or flange of CR305	4	Indicating light[1]	–
	4a	One (red only)[2]	1
	4b	One (specify red or green) (heavy-duty, CR104P)	Any
	4c	Two (includes 1 NC auxiliary contact)[4] (heavy-duty, CR104P)	Any
	4d	One push-to-test and/or transformer type (red or green)	Any
	4e	Two Push-to-test (includes 1 NC auxiliary contact) and/or transformer type[4]	Any

[1] One indicating light: Wired in parallel with operating coil. Two indicating lights: Red is wired in parallel with operating coil, green is wired through an auxiliary contact.
[2] Factory-installed field modification kit for sizes 00-4 and size 5 without CPT.
[3] Not available in NEMA size 00. Use Size 0 contactor modification.
[4] Maximum of three additional auxiliary contacts available on size 0-1.

Type of installation/ contactors	Item no.	Modifications	Enclosure type
Control circuit in CR305	8	Separate control circuit (specify voltage and frequency, reference items 13a and 13b for standard voltages)	Any
	9	Fused control circuit—two fuses	Any
	10	Control transformer—standard capacity, 50 or 60 Hz[2] Two primary and one fuse secondary, (specify voltage rating) standard voltages at 60 Hz 220-230-240 primary, 110-115-120 secondary 440-460-480 primary, 110-115-120 secondary 550-575-600 primary, 110-115-120 secondary 200-208 primary, 115-120 secondary	Any
	11	Control transformer—100 VA additional capacity, 60 Hz	Any
	12	–	–
	13	Operating coil	–
	13a[4]	Standard voltages at 60 Hz: 24, 115-120, 200-208, 230-240, 460-480, 575-600	Any
	13b	Standard voltages at 50 Hz: 110, 220, 380-415, 440, 550	Any
	13d	DC—standard voltages: 24, 115-125	Any

[1]Not available in NEMA size 00. Use size 0 contactor modification.
[2]The National Electrical Code, Article 450-3(B), requires primary fuses in most typical installations. Refer to the NEC, Article 450 prior to ordering control transformer without primary fuses to insure compliance. Control circuit fuse kits from page 1-206 may be used to provide primary fusing. Fuses must be sized to meet the requirements of the NEC according to the table below.
[3]Not available in NEMA sizes 00 or 0. Use Size 1 contactor modification.
[4]24 V coil not available on size 5 and 6.

Recommended fuse

	Primary voltage		
CPT VA	208/240	480	600
50	1	0.5	0.5
100	2	1	0.75
150	3	1.5	1
250	5	2	2
300	6	3	2

CR305, CR385 magnetic contactors

Factory-installed modifications

Contactor modifications — factory installed

The general information at the top of page 202, regarding factory-installed modifications, also applies to those listed in the tables below.

Type of installation/ contactors	Item no.	Modifications	Enclosure type
Auxiliary relays mounted in CR305	14[1]	Control relay, four-pole (convertible) unwired (specify coil voltage)	1, 3R, 12
			4/4X
	15[1]	Time-delay relay, unwired, pneumatic—1 to 60 seconds, 1 NO-1 NC (specify TDD or TDE and coil voltage)[3]	1, 3R, 12
			4/4X
	16[1]	Timing relay, motor driven, unwired (specify voltage and timing range)[3]	Any
	17[1]	Phase loss, phase reversal, three-phase, undervoltage relay (starting and running protection, specify voltage)	Any
Auxiliary contacts mounted in CR305	19[1]	Magnetic contactor (specify number of NO or NC) — single speed, nonreversing: four maximum, sizes 0, 1 five maximum, size 2-6 reversers and two-speed, two winding: two maximum, per contactor, sizes 0-6 two-speed, one winding: one on left contactor, two on right contactor, size 0, 1 two maximum per contactor, sizes 2-6	Any

[1]NEMA Type 1 enclosures require oiltight pilot devices when this modification is used with NEMA contactor sizes 0, 1, and 2. Only oiltight pilot devices will fit the oversized enclosure required.
[2]Not available in NEMA size 00. Use size 0 contactor modification.
[3]Requires 100 VA extra capacity control transformer.

Type of installation/ contactors	Item no.	Modifications	Enclosure type
Metering mounted In CR305	27	Elapsed time meter	1, 3R, 12
			4/4X
Enclosure CR305	30	Space heater[2] 50 watts—NEMA size 0-4 contactor/starter 100 watts—NEMA size 5 contactor	Any
Misc. mounted on CR305	31	Operating coil surge suppressor (120 V/60 Hz)	Any
	32	Insulated neutral lug	Any
	33	Ground lug	Any
	34	Terminal block, (product number CR151B) 30 A, unwired (per point) (specify points)	Any
	35	Power factor correction capacitor terminals	Any

[1]Not available in NEMA size 00. Use Size 0 contactor modification.
[2]If connected to control circuit transformer, 115-volt heater requires an extra capacity transformer for size 0-1 and size 5.

CR305, CR385 magnetic contactors

Factory-installed modifications

Factory-installed auxiliary contacts
The final letter of the Product Number denotes extra auxiliary contacts (sometimes referred to as auxiliary interlocks). Order the desired extra auxiliary contacts, factory installed on the contactor, by replacing the final letter of the Product Number with a letter from the first column of the auxiliary contact table.

If a CR305 or 306 Product Number has no 3-letter suffix, first add an “AAA” suffix, and then substitute a letter from first column of the auxiliary contact table. Example: CR306C022 becomes CR306C022AAD for a size 1 contactor with one extra NO and one extra NC auxiliary contact.

Extra auxiliary contact table
For NEMA size 5 and 6, AC coils only

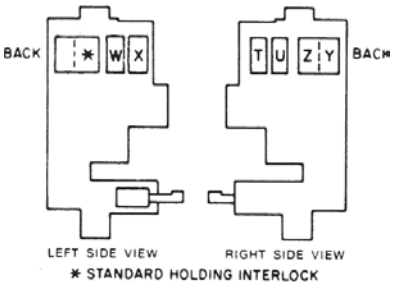

NEMA sizes 5 and 6, single-speed, nonreversing contactors

Final suffix letter of product no. on contactor	Contact location 5 contacts max.					
	W	X	Y	Z	T	U
A or None						
B	⊣⊢					
C	⋇					
D			⋇	⊣⊢		
E	⊣⊢	⊣⊢				
F	⋇	⋇				
G	⊣⊢		⋇	⊣⊢		
H	⋇		⋇	⊣⊢		
J	⊣⊢	⊣⊢		⊣⊢		
K	⋇	⋇	⋇			
L	⊣⊢	⊣⊢		⊣⊢		⊣⊢
M	⋇	⋇	⋇			⋇
N	⋇	⊣⊢	⋇	⊣⊢		
P	⊣⊢	⊣⊢	⋇	⊣⊢		
R	⋇	⋇	⋇	⊣⊢		
S	⋇	⊣⊢	⋇	⊣⊢		⊣⊢
T	⋇	⊣⊢	⋇	⊣⊢		⋇
U	⊣⊢	⊣⊢	⋇	⊣⊢		⊣⊢
W	⋇	⋇	⋇	⊣⊢		⋇
X	⊣⊢	⊣⊢		⊣⊢	⊣⊢	⊣⊢
Y	⋇	⋇	⋇		⋇	⋇

Extra auxiliary contact table
For NEMA size 0 and 1, AC coils only

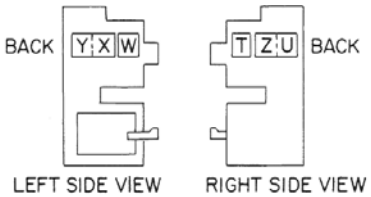

NEMA sizes 0 and 1, single-speed nonreversing 2- and 3-pole contactors

Final suffix letter of product no. on contactor	Contact location 5 contacts max.					
	W	X	Y	Z	T	U
A or None						
B		⊣⊢				
C			⋇			
D		⊣⊢	⋇			
E	⊣⊢	⊣⊢				
F	⋇		⋇			
G	⊣⊢	⊣⊢	⋇			
H	⋇	⊣⊢	⋇			
J	⊣⊢	⊣⊢			⊣⊢	
K	⋇		⋇	⊣⊢		⋇
L	⊣⊢	⊣⊢		⋇	⊣⊢	
M	⋇		⋇			⋇
N		⊣⊢	⋇		⊣⊢	⋇
P	⊣⊢	⊣⊢	⋇		⊣⊢	
R	⋇	⊣⊢	⋇			⋇

CR305, CR385 magnetic contactors

Factory-installed modifications

NEMA sizes 7-9, single-speed, nonreversing contactors

Extra auxiliary contact table
For NEMA size 2, 3 and 4, AC coils only

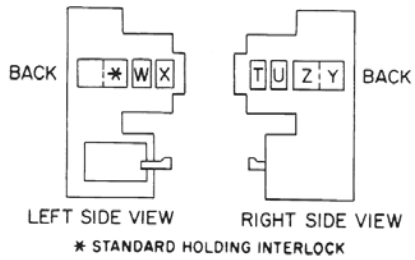

NEMA sizes 2, 3, and 4,
single-speed, nonreversing contactors

Final suffix letter of product no. on contactor	Contact location 5 contacts max.					
	W	X	Y	Z	T	U
A or None						
B	⊣⊢					
C	⋇					
D			⋇	⊣⊢		
E	⊣⊢	⊣⊢				
F	⋇	⋇				
G	⊣⊢		⋇	⊣⊢		
H	⋇		⋇	⊣⊢		
J	⊣⊢	⊣⊢		⊣⊢		
K	⋇	⋇	⋇			
L	⊣⊢	⊣⊢		⊣⊢		⊣⊢
M	⋇	⋇	⋇			⋇
N	⋇	⊣⊢	⋇	⊣⊢		
P	⊣⊢	⊣⊢	⋇	⊣⊢		
R	⋇	⋇	⋇	⊣⊢		
S	⋇	⊣⊢	⋇	⊣⊢		⊣⊢
T	⋇	⊣⊢	⋇	⊣⊢		⋇
U	⊣⊢	⊣⊢	⋇	⊣⊢		⊣⊢
W	⋇	⋇	⋇	⊣⊢		⋇
X	⊣⊢	⊣⊢		⊣⊢	⊣⊢	⊣⊢
Y	⋇	⋇	⋇		⋇	⋇

Extra auxiliary contact table
For NEMA size 7–9, AC coils only

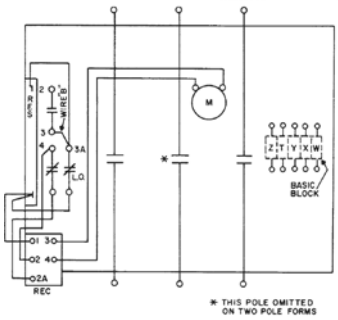

NEMA sizes 7-9

Final suffix letter of product no. on contactor	Contact location 5 contacts max.				
	W	X	Y	T	Z
A or None					
B	⊣⊢				
C	⋇				
D	⋇	⊣⊢			
E	⊣⊢	⊣⊢			
F	⋇	⋇	⊣⊢		
G	⊣⊢	⋇	⊣⊢		
H	⋇	⋇	⊣⊢		
J	⊣⊢	⊣⊢	⊣⊢		
K	⋇	⋇	⋇	⊣⊢	
L	⊣⊢	⊣⊢	⊣⊢	⋇	
M	⋇	⋇	⋇	⊣⊢	
N	⋇	⊣⊢	⋇	⊣⊢	
P	⊣⊢	⊣⊢	⋇	⊣⊢	
R	⋇	⋇	⋇	⊣⊢	
S	⋇	⊣⊢	⋇	⊣⊢	⊣⊢
T	⋇	⊣⊢	⋇	⊣⊢	⋇
U	⊣⊢	⊣⊢	⋇	⊣⊢	⊣⊢
W	⋇	⋇	⋇	⊣⊢	⋇
X	⊣⊢	⊣⊢	⊣⊢	⊣⊢	⊣⊢
Y	⋇	⋇	⋇	⋇	⋇

CR305, CR385 auxiliary contact kits

For field installation on magnetic contactors

NEMA sizes 0-7

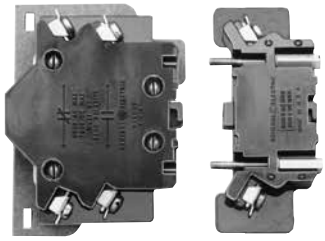

—
Basic block and adder block

Application

Auxiliary contacts can add to the versatility of magnetic contactors by providing additional control circuits to do a variety of jobs without adding to the width of the contactor.

Kits make it easy to add contacts to control accessory equipment such as indicating lights. Auxiliary contacts can be added to all across-the-line magnetic contactors. Each auxiliary contact is rated 10 amperes AC, resistive load, NEMA “A600,” and is suitable for either right or left side mounting. An insulating shield is also provided between each auxiliary contact unit and the contactor.

Auxiliary contacts are furnished in the basic block design or as an adder block.
Each contact is marked NO or NC on the block and is not convertible. Logic reed contacts suitable for low energy level circuits are also available. These are designed for applications on low-voltage control circuits (24 volts and below), such as inputs to computers and programmable starters.

Product number selection instructions

1. Order by quantity and complete product number.
   Example: Three CR305X300A

—
Reference publications

Instructions	
NEMA size	Publication number
0, 1	1SQC912014M0201
2	1SQC912015M0201
3, 4	1SQC912016M0201
5, 6	1SQC912032M0201
7-9	1SQC912033M0201
0, 1 Logic reed	1SQC912034M0201
2 Logic reed	1SQC912035M0201
3, 4 Logic reed	1SQC912036M0201
5, 6 Logic reed	1SQC912037M0201

CR305, CR385 auxiliary contact kits

Field-installed modification kits

For 300-line contactors

Auxiliary contact kits

NEMA size	Contact configuration	Block design	Product number
0,1	1NO	Basic	CR305X100A
0,1	1NC	Basic	CR305X100B
0,1	1NO–1NC	Basic	CR305X100C
2	1NO	Basic	CR305X200A
2	1NC	Basic	CR305X200B
2	1NO–1NC	Basic	CR305X200C
3, 4	1NO	Basic	CR305X300A
3, 4	1NC	Basic	CR305X300B
3, 4	1NO–1NC	Basic	CR305X300C
5, 6	1NO	Basic	CR305X500A
5, 6	1NC	Basic	CR305X500B
5, 6	1NO–1NC	Basic	CR305X500C
7	1NO	Basic	CR385X600A
7	1NC	Basic	CR385X600B
7	1NO–1NC	Basic	CR385X600C
8-9	1NO	Basic	CR385X800A
8-9	1NC	Basic	CR385X800B
8-9	1NO–1NC	Basic	CR385X800C

Auxiliary contact kits - adder blocks

NEMA size	Contact configuration	Block design	Product number
0-9	1NO	Adder	CR305X100D[1]
0-9	1NC	Adder	CR305X100E[1]

Logic reed switch auxiliary contacts[2]

NEMA size	Contact configuration	Product number
00, 0, 1	1NO-0NC	CR305X100RA
00, 0, 1	0NO-1NC	CR305X100RB
00, 0, 1	1NO–1NC	CR305X100RC
2	1NO-0NC	CR305X200RA
2	0NO-1NC	CR305X200RB
2	1NO–1NC	CR305X200RC
3, 4	1NO-0NC	CR305X300RA
3, 4	0NO-1NC	CR305X300RB
3, 4	1NO–1NC	CR305X300RC
5, 6	1NO-0NC	CR305X500RA
5, 6	0NO-1NC	CR305X500RB
5, 6	1NO–1NC	CR305X500RC

CR305, CR385 auxiliary contact kits

Field-installed modification kits

For 300-line contactors

Contact ratings - basic blocks

High fidelity contact basic block

120 V AC maximum 0.15 A maximum, 8 VA maximum resistive.
30 V DC maximum 0.15 A maximum, 4.5 VA maximum resistive.

—

Standard block

AC volts	Continuous current amperes	Inrush current amperes	DC volts	Continuous current amperes	Inrush current amperes
115	6.0	60	125	1.1	–
230	3.0	30	250	0.5	–
460	1.5	15	–	–	–
575	1.2	12	–	–	–

[1]First adder block must be mounted to a basic block. A second adder block can be added to the first adder block on size 2 through size 9 starters.
Four extra auxiliary contacts (not blocks) is the maximum that can be added to either a NEMA size 0 or 1 starter while five is the maximum extra auxiliary contacts that can be added to NEMA size 2 through 6 devices.
[2]CR305X logic reed switch auxiliary contacts may be ordered as a factory-installed modification. Order by description.

CR305X auxiliary contact kits

For field installation on magnetic contactors (300-line)

Selection and installation guides

Extra auxiliary contact table
For NEMA size 0 and 1, AC coils only

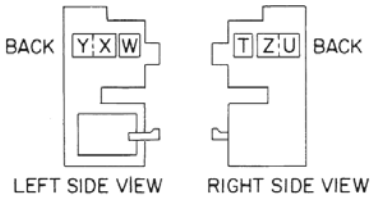

NEMA sizes 0 and 1, single-speed, nonreversing, 2- and 3-pole (side views)

						Kits for field modification order in quantities shown product number CR305				
Contact location 5 contacts max.						X100A	X100B	X100C[1]	X100D	X100E
W	X	Y	Z	T	U		Basic blocks		Adder blocks	
	⊣⊢					1				
		⋇					1			
	⊣⊢	⋇						1		
⊣⊢	⊣⊢					1			1	
⋇		⋇					1			1
⊣⊢	⊣⊢	⋇						1	1	
⋇	⊣⊢	⋇						1		1
⊣⊢	⊣⊢			⊣⊢		2			1	
⋇		⋇	⊣⊢		⋇		2			1
⊣⊢	⊣⊢		⋇	⊣⊢		2			2	
⋇		⋇			⋇		2			2
	⊣⊢	⋇		⊣⊢	⋇			2		
⊣⊢	⊣⊢	⋇		⊣⊢		1		1	1	
⋇	⊣⊢	⋇			⋇		1	1		1

Extra auxiliary contact table
For NEMA size 2, 3 and 4, AC coils only

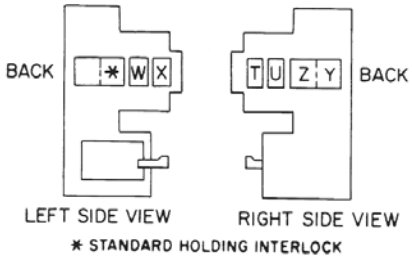

NEMA sizes 2, 3 and 4, single-speed, nonreversing (side views)

						Kits for field modification order in quantities shown product number CR305				
									For size 2	
						X200A	X200B	X200C[1]	X100D	X100E
									For size 3, 4	
Contact location 5 contacts max.						X300A	X300B	X300C[1]	X100D	X100E
W	X	Y	Z	T	U		Basic blocks		Adder blocks	
⊣⊢									1	
⋇										1
		⋇	⊣⊢					1		
⊣⊢	⊣⊢								2	
⋇	⋇									2
⊣⊢		⋇	⊣⊢					1	1	
⋇		⋇	⊣⊢					1		1
⊣⊢	⊣⊢		⊣⊢			1			2	
⋇	⋇	⋇					1			2
⊣⊢	⊣⊢		⊣⊢		⊣⊢	1			3	
⋇	⋇	⋇			⋇		1			3
⋇	⊣⊢	⋇	⊣⊢					1	1	1
⊣⊢	⊣⊢	⋇	⊣⊢					1	2	
⋇	⋇	⋇	⊣⊢					1		2
⋇	⊣⊢	⋇	⊣⊢		⊣⊢			1	2	1
⋇	⊣⊢	⋇	⊣⊢		⋇			1	1	2
⊣⊢	⊣⊢	⋇	⊣⊢		⊣⊢			1	3	
⋇	⋇	⋇	⊣⊢		⋇			1		3
⊣⊢	⊣⊢		⊣⊢	⊣⊢	⊣⊢	1			4	
⋇	⋇	⋇		⋇	⋇		1			4

CR305X auxiliary contact kits

For field installation on magnetic contactors (300-line)

Selection and installation guides

Extra auxiliary contact table
For NEMA size 5 and 6, AC coils only

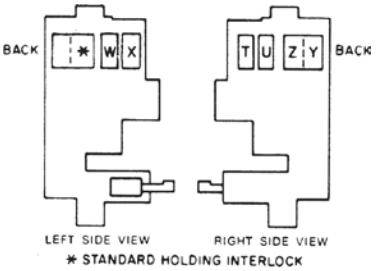

NEMA sizes 5 and 6 single-speed, nonreversing (side views)

Contact location 5 contacts max.						Kits for field modification order in quantities shown product number CR305				
						X200A X300A	X200B X300B	X200C[1] X300C[1]	X100D X100D	X100E X100E
W	X	Y	Z	T	U	Basic blocks			Adder blocks	
⊣⊢									1	
⋇										1
		⋇	⊣⊢					1		
⊣⊢	⊣⊢								2	
⋇	⋇									2
⊣⊢		⋇	⊣⊢					1	1	
⋇		⋇	⊣⊢					1		1
⊣⊢	⊣⊢		⊣⊢			1			2	
⋇	⋇	⋇					1			2
⊣⊢	⊣⊢		⊣⊢		⊣⊢	1			3	
⋇	⋇	⋇			⋇		1			3
⋇	⊣⊢	⋇	⊣⊢					1	1	1
⊣⊢	⊣⊢	⋇	⊣⊢					1	2	
⋇	⋇	⋇	⊣⊢					1		2
⋇	⊣⊢	⋇	⊣⊢		⊣⊢			1	2	1
⋇	⊣⊢	⋇	⊣⊢		⋇			1	1	2
⊣⊢	⊣⊢	⋇	⊣⊢		⊣⊢			1	3	
⋇	⋇	⋇	⊣⊢		⋇			1		3
⊣⊢	⊣⊢		⊣⊢	⊣⊢	⊣⊢	1			4	
⋇	⋇	⋇		⋇	⋇		1			4

[1]Both NO and NC contacts must be wired for same polarity

Field-installed modification kits

For 300-line contactors

NEMA sizes 00-6

Pilot device modification kits

The push button and selector switch kits listed here are supplied complete with the necessary components, hardware and written instructions for easy field installation on Type 1 enclosed contactors—CR305.

	Kit type	NEMA size	Product number
Start-stop push button kits	Momentary contact start-stop push button kits	00, 0, 1	CR305X120N
	Momentary contact start-stop push button kits	2	CR305X220N
	Momentary contact start-stop push button kits	3, 4	CR305X320B
	Momentary contact start-stop push button kits	5	CR305X520B
Selector switch kits	H and-off-auto selector switch kits	00, 0, 1	CR305X130N
	H and-off-auto selector switch kits	2	CR305X230N
	H and-off-auto selector switch kits	3, 4	CR305X330B
	H and-off-auto selector switch kits	5	CR305X530B
	Off-on selector switch kits	00, 0, 1	CR305X130P
	Off-on selector switch kits	2	CR305X230D
	Off-on selector switch kits	3, 4	CR305X330D
	Off-on selector switch kits	5	CR305X530D

Fifth-pole kits

To be installed on NEMA size 0, 1, and 2 magnetic four-pole contactors. Permits the addition of a fifth pole with the same rating as the main poles.

	NEMA size	Mounting Position	Product Number
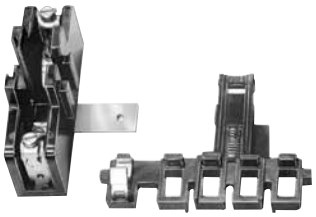 Fifth-pole kit	0, 1	Right	CR305X111B
	2 (add to 4-pole form)	Left	CR305X211B

Field-installed modification kits

For 300-line contactors

NEMA sizes 00-6

Adapter mounting plate

For mounting a 300-line magnetic starter in place of a competitive unit.
Adapter plate good for mounting in place of the following:

- A-B 709. Size 1: W B200. Sizes 00-2: Furnas Sizes 00-1: GTE TM. Sizes 00-2: Sq. D 8536, Sizes 00-2.
- Not needed for C-H—same as ABB.

Note: GTE now known as Joslyn Clark.

NEMA size	Product number
00-1	CR306X191A

Indicating light kits (red)

To be installed on contactor and extend through knockout in cover of CR305 devices in Type 1 enclosures. Each kit has three resistors allowing light to be used with all voltages of 110 through 600. Uses NE-45 bulb. Can be used with push button or selector switch kit.

NEMA size	Product number
00, 0, 1	CR305X150N
2	CR305X250N
3, 4	CR305X350B
5	CR305X550B
NE-45 bulb	CR2940U200BL

Field-installed modification kits

For 300-line contactors

NEMA sizes 00-6

Surge suppression kit

To be connected in parallel with operating coil where the demands of solid-state circuitry necessitate prevention of undesirable reactions in logic circuits. For use on 120 volt AC only.

	NEMA size	Product number
	0-6	CR305X146C

Surge suppression kit

Control circuit fuse kits

Control circuit fuse kits are designed for installation on NEMA size 00-5 across-the-line contactors. They install on the side of the contactor and provide fuse protection for control circuit wiring. These kits incorporate one or two 10 ampere 600 volt fuse holders for use with KTK or KTKR fuses (or equivalent). The fuses are easily accessible with the enclosure covers open, and each kit contains instructions and hardware for easy installation. Instructions: GEH-4822.

NEMA size	No. of fuses	Fuse type	Product number
00-1	1	KTK	CR305X141A
00-1	2	KTK	CR305X141B
2	1	KTK	CR305X241A
2	2	KTK	CR305X241B
3, 4	1	KTK	CR305X341A
3, 4	2	KTK	CR305X341B
5, 6	1	KTK	CR305X541A
5, 6	2	KTK	CR305X541B
00-1	1	KTK-R	CR305X141C
00-1	2	KTK-R	CR305X141D
2	1	KTK-R	CR305X241C
2	2	KTK-R	CR305X241D
3, 4	1	KTK-R	CR305X341C
3, 4	2	KTK-R	CR305X341D
5, 6	1	KTK-R	CR305X541C
5, 6	2	KTK-R	CR305X541D

Field-installed modification kits

For 300-line contactors

NEMA sizes 00-6

Control amplifier

The ABB CR305X control amplifier is suitable for applications with low level 24 volt DC outputs. It allows the low level signals from a programmable control, microprocessor, or photoelectric cell to operate ABB's 300-line contactors while their control coils operate at the line voltage. The control amplifier is UL listed and CSA certified, and forms are available for NEMA sizes 00 through 5.

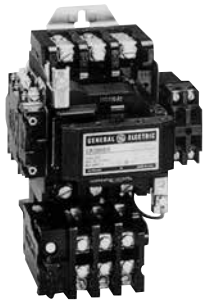

Typical size 2 starter with CR305X control amplifier mounted on right

Operation type	NEMA size	Product number
Nonreversing	00, 0, and 1	CR305X112A
Nonreversing	2	CR305X212A
Nonreversing	3 and 4	CR305X312A
Nonreversing	00, 0, 1, 2, 3, and 4	CR305X112P[1]

[1]A quantity of two panel mount CR305X112P is required for use with reversing contactors and starters.

Reference publications

Instructions, indicating light kits for type 1 enclosure	
NEMA size	**Publication number**
00, 0, 1	1SQC912038M0201
2	1SQC912039M0201
3, 4	1SQC912059M0201
5	1SQC912040M0201

Instructions, push button and selector switch kits for type 1 enclosure	
NEMA size	**Publication number**
00, 0, 1	1SQC910001M0201
2	1SQC912041M0201
3, 4	1SQC912042M0201
5	1SQC912043M0201

Field-installed modification kits

For 300-line contactors

NEMA sizes 00-6

Space heater kits

CR305X701 and CR305X702 space heater kits (50 watts, except size 5 and 6 at 100 watts) come complete with one NC auxiliary contact, necessary hardware and ready for installation on any NEMA size 0 through 6 enclosed contactor CR305, or equivalent 200-line devices.

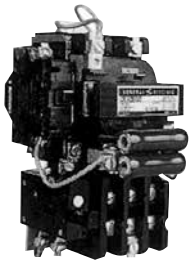

Space heater installed on typical NEMA size 1 starter

NEMA size	Operating voltage	Product number
0-1	115	CR305X701D[1]
0-1	230	CR305X701A
0-1	460	CR305X701B
0-1	600	CR305X701C
2, 3, 4	115	CR305X702D
2, 3, 4	230	CR305X702A
2, 3, 4	460	CR305X702B
2, 3, 4	600	CR305X702C
5, 6	115	CR305X705D[1]
5, 6	230	CR305X705A
5, 6	460	CR305X705B
5, 6	600	CR305X705C

Mechanical interlock kits

To be installed on open CR305 or CR385 contactors unless otherwise noted. Kits include all parts to mechanically interlock 2 devices.

NEMA size	Mounting position	Baseplate	Product number
0-1	Horizontal	No	CR309X100B
2	Horizontal	No	CR309X200D
3-4	Horizontal	No	CR309X300B
5	Horizontal	Yes	CR309X501K
0-1	Vertical	Yes	CR309X102B[2]
2	Vertical	Yes	CR309X202B[2]
3-4	Vertical	Yes	CR309X302B[2]
5	Vertical	No	CR309X502K
6	Vertical	No	CR309X602B[5]
7	Vertical	No	CR389X100C
8-9	Vertical	No	CR389X100H

[1]If connected to control circuit transformer, 115-volt heater requires an extra-capacity transformer.
Contact nearest ABB Representative for additional information.
[2]For contactors top and bottom or contactor on top.
[3]For contactors top and bottom only.

Reference publications

Instructions:	
Space heater kits	**Publication number**
Control transformer kits	1SQC912005M0201

CR305, CR385 magnetic contactors

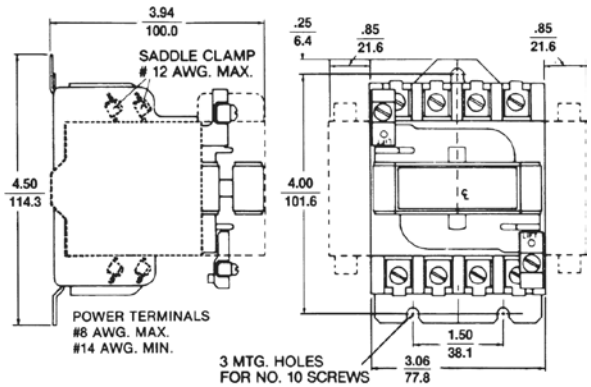

Open type, NEMA sizes 00-1, (auxiliary interlocks not provided on size 00); 2 3/4 lbs.

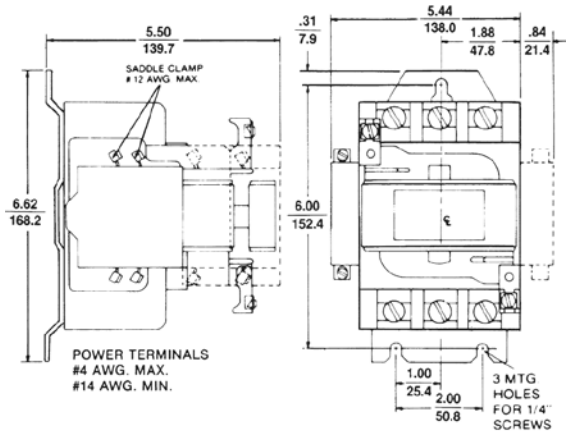

Open type, NEMA size 2, 7 lbs.

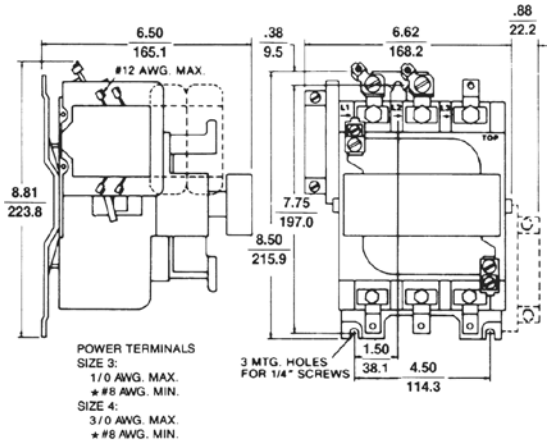

Open type, NEMA sizes 3 and 4; 17 1/2 lbs.

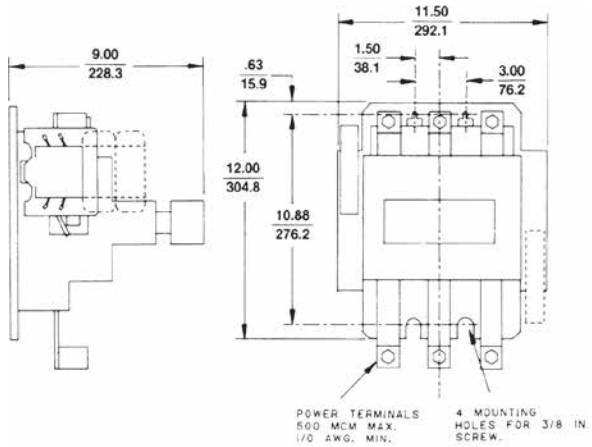

Open type, NEMA size 5, 50 lbs.

CR305, CR385 magnetic contactors

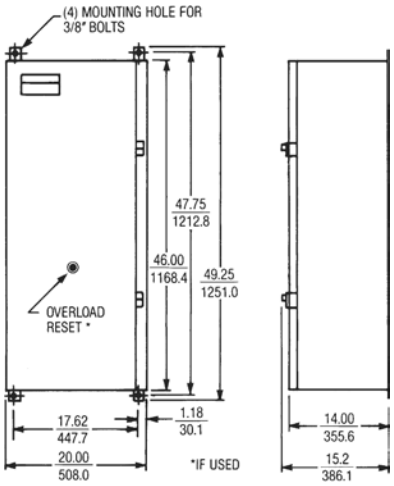

—
CR305, NEMA size 6, type 1 and type 12

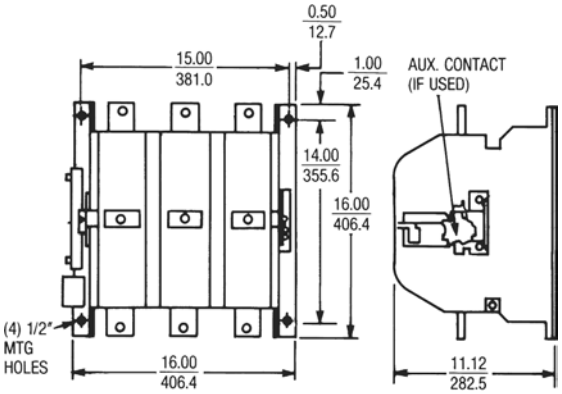

—
CR385, open type, NEMA size 7, 82 lbs.

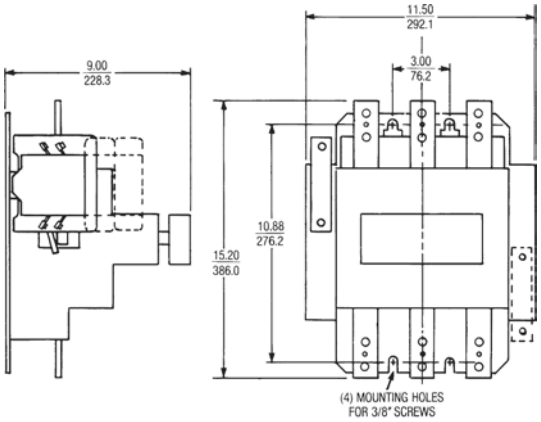

—
CR305, open type, NEMA size 6; 50 lbs.—

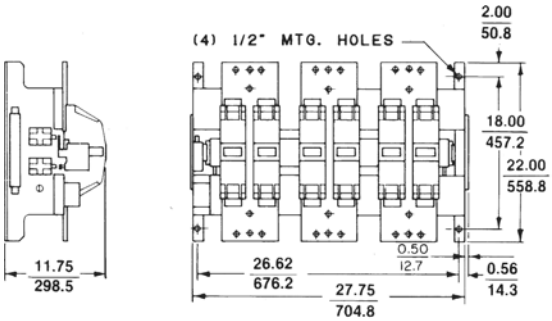

—
CR385, open type, NEMA size 9, 310 lbs.

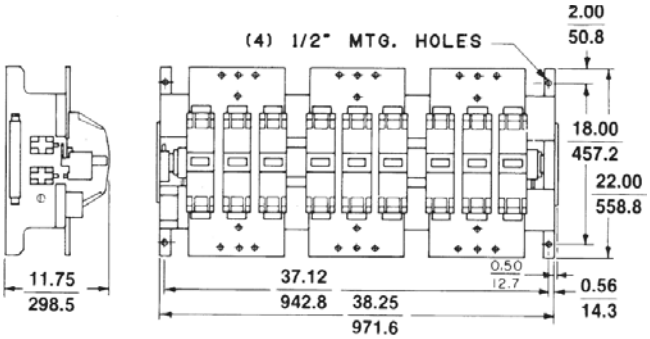

—
CR385, open type, NEMA size 8, 205 lbs.

Outlines, dimensions ($\frac{\text{in.}}{\text{mm}}$) and weights (for estimating only)

CR305 magnetic contactors

CR305 NEMA type 1 NEMA sizes 00-4

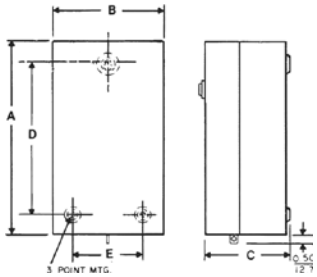

Type 1, NEMA sizes 00-4

NEMA size	Dimension A	Dimension B	Dimension C	Dimension D	Dimension E	Dimension F	Mounting screw size	Approx. shipping wt. (lbs)
00	10.00 (254.0)	6.00 (152.4)	4.63 (117.6)	8.00 (203.2)	4.00 (101.6)	1.00 (25.4)	#10	5.5
0	10.00 (254.0)	6.00 (152.4)	4.63 (117.6)	8.00 (203.2)	4.00 (101.6)	1.00 (25.4)	#10	5.5
1	10.00 (254.0)	6.00 (152.4)	4.63 (117.6)	8.00 (203.2)	4.00 (101.6)	1.00 (25.4)	#10	5.5
2	13.25 (336.6)	7.38 (187.4)	6.13 (155.7)	11.00 (279.4)	5.00 (127.0)	1.13 (28.7)	¼"	13
3	20.25 (514.4)	8.75 (222.2)	7.31 (185.7)	17.00 (431.8)	5.75 (146.0)	1.88 (47.8)	¼"	35
4	25.00 (635.0)	8.75 (222.2)	7.31 (185.7)	22.00 (558.8)	5.75 (146.0)	1.50 (38.1)	¼"	38

CR305 NEMA type 1 NEMA size 5

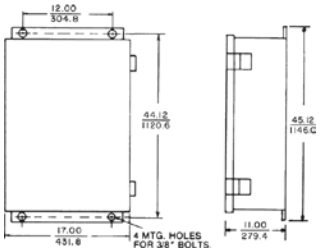

Type 1, NEMA size 5, 134 lbs.

See diagram

CR305 NEMA type 12 NEMA sizes 0-2

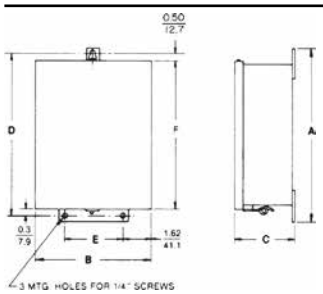

Type 12, NEMA sizes 0-2

NEMA size	Dimension A	Dimension B	Dimension C	Dimension D	Dimension E	Dimension F	Approx. shipping wt. (lbs)
0	11.63 (295.4)	6.25 (158.8)	4.75 (120.6)	11.00 (279.4)	3.00 (76.2)	10.25 (260.4)	6
1	11.63 (295.4)	6.25 (158.8)	4.75 (120.6)	11.00 (279.4)	3.00 (76.2)	10.25 (260.4)	6
2	14.63 (371.6)	7.63 (193.8)	6.25 (158.8)	14.00 (355.6)	4.38 (111.2)	13.25 (366.6)	14

CR305 magnetic contactors

CR305 NEMA type 12 NEMA sizes 0-2

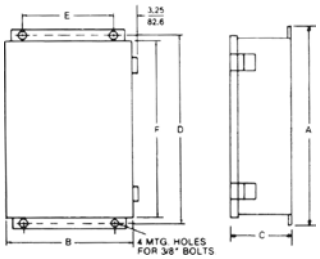

Type 12, NEMA sizes 3-5

NEMA size	Dimension A	Dimension B	Dimension C	Dimension D	Dimension E	Dimension F	Approx. shipping wt. (lbs)
3	24.00 (609.6)	10.00 (254.0)	7.25 (184.2)	23.00 (584.2)	5.00 (127.0)	21.25 (539.8)	40
4	30.00 (762.0)	10.00 (254.0)	7.25 (184.2)	29.00 (736.6)	5.00 (127.0)	24.25 (616.0)	43
5	45.50 (1155.7)	17.00 (431.8)	10.25 (260.4)	44.50 (1130.3)	12.00 (304.8)	42.75 (1085.9)	154

CR305 NEMA type 3R NEMA sizes 0-2

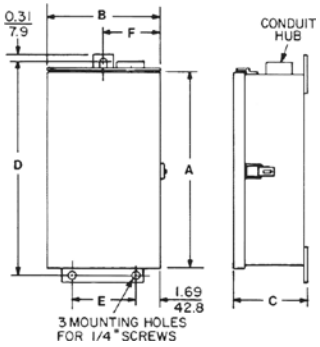

Type 3R, NEMA sizes 0-2

NEMA size	Dimension A	Dimension B	Dimension C	Dimension D	Dimension E	Dimension F	Approx. shipping wt. (lbs)
0	14.50 (368.3)	6.38 (161.9)	4.75 (120.6)	15.00 (381.0)	3.00 (76.2)	3.19 (80.9)	6
1	14.50 (368.3)	6.38 (161.9)	4.75 (120.6)	15.00 (381.0)	3.00 (76.2)	3.19 (80.9)	6
2	16.50 (419.1)	7.75 (196.8)	6.50 (165.1)	17.00 (431.8)	4.38 (111.2)	3.88 (98.4)	14

CR305 magnetic contactors

CR305 NEMA type 3R NEMA sizes 0-2

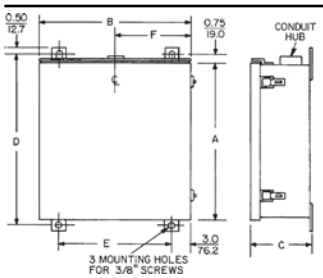

Type 3R, NEMA sizes 3-5

NEMA size	Dimension A	Dimension B	Dimension C	Dimension D	Dimension E	Dimension F	Approx. shipping wt. (lbs)
3	22.00 (558.8)	17.19 (436.6)	7.25 (184.2)	23.50 (596.9)	11.00 (279.4)	8.6 (217.9)	43
4	26.00 (660.4)	17.19 (436.6)	7.25 (184.2)	27.50 (698.5)	11.00 (279.4)	8.6 (217.9)	43
5	42.00 (1066.8)	22.00 (558.8)	10.25 (260.4)	43.50 (1104.9)	16.00 (406.0)	11.0 (279.4)	135
6	46.00 (1168.4)	20.00 (508.0)	14.00 (355.6)	47.75 (1212.8)	17.62 (447.7)	–	260

CR305 NEMA type 4/4X NEMA sizes 0-6

NEMA size	Height	Depth	Width	Approx. shipping wt. (lbs)
0	15.62 (396.7)	4.75 (120.6)	6.38 (162.0)	6
1	15.62 (396.7)	4.75 (120.6)	6.38 (162.0)	6
2	17.62 (447.5)	6.50 (165.1)	7.75 (196.8)	14
3	25.40 (622.3)	7.25 (184.2)	17.00 (431.8)	40
4	28.50 (723.9)	7.25 (184.2)	17.00 (431.8)	43
5	44.50 (1130.3)	10.25 (260.4)	22.00 (558.8)	154
6				Contact nearest ABB Representative

Additional information
We reserve the right to make technical changes or modify the contents of this document without prior notice. With regard to purchase orders, the agreed particulars shall prevail. ABB Inc. does not accept any responsibility whatsoever for potential errors or possible lack of information in this document.

We reserve all rights in this document and in the subject matter and illustrations contained therein. Any reproduction, disclosure to third parties or utilization of its contents – in whole or in parts – is forbidden without prior written consent of ABB Inc.

—

US
ABB Inc.
305 Gregson Drive
Cary, NC 27511

abb.com/lowvoltage

© Copyright 2021 ABB. All rights reserved.
Specifications subject to change without notice.

GE is a trademark of GE. Manufactured by ABB Inc. under license from GE.

1SQC912001C0201, 9. 2021