RELION® PROTECTION AND CONTROL

REX640

Installation Manual

Document ID: 1MRS759115
Issued: 2023-02-10
Revision: E

Disclaimer

The data, examples and diagrams in this manual are included solely for the concept or product description and are not to be deemed as a statement of guaranteed properties. All persons responsible for applying the equipment addressed in this manual must satisfy themselves that each intended application is suitable and acceptable, including that any applicable safety or other operational requirements are complied with. In particular, any risks in applications where a system failure and/or product failure would create a risk for harm to property or persons (including but not limited to personal injuries or death) shall be the sole responsibility of the person or entity applying the equipment, and those so responsible are hereby requested to ensure that all measures are taken to exclude or mitigate such risks.

This product has been designed to be connected and communicate data and information via a network interface which should be connected to a secure network. It is the sole responsibility of the person or entity responsible for network administration to ensure a secure connection to the network and to take the necessary measures (such as, but not limited to, installation of firewalls, application of authentication measures, encryption of data, installation of antivirus programs, etc.) to protect the product and the network, its system and interface included, against any kind of security breaches, unauthorized access, interference, intrusion, leakage and/or theft of data or information. ABB is not liable for any such damages and/or losses.

This document has been carefully checked by ABB but deviations cannot be completely ruled out. In case any errors are detected, the reader is kindly requested to notify the manufacturer. Other than under explicit contractual commitments, in no event shall ABB be responsible or liable for any loss or damage resulting from the use of this manual or the application of the equipment.

In case of discrepancies between the English and any other language version, the wording of the English version shall prevail.

Conformity

This product complies with the directive of the Council of the European Communities on the approximation of the laws of the Member States relating to electromagnetic compatibility (EMC Directive 2014/30/EU) and concerning electrical equipment for use within specified voltage limits (Low-voltage directive 2014/35/EU). This conformity is the result of tests conducted by the third party testing laboratory Intertek in accordance with the product standard EN 60255-26 for the EMC directive, and with the product standards EN 60255-1 and EN 60255-27 for the low voltage directive. The product is designed in accordance with the international standards of the IEC 60255 series.

Safety information

Dangerous voltages can occur on the connectors, even though the auxiliary voltage has been disconnected.

Non-observance can result in death, personal injury or substantial property damage.

Only a competent electrician is allowed to carry out the electrical installation.

National and local electrical safety regulations must always be followed.

The frame of the protection relay has to be carefully earthed.

The protection relay contains components which are sensitive to electrostatic discharge. Unnecessary touching of electronic components must therefore be avoided.

Whenever changes are made in the protection relay, measures should be taken to avoid inadvertent tripping.

Contents

1 Introduction

1.1 This manual

The installation manual contains instructions on how to install the protection relay. The manual provides procedures for mechanical and electrical installation. The chapters are organized in the chronological order in which the relay should be installed.

1.2 Intended audience

This manual addresses the personnel responsible for installing the product hardware.

The installation personnel must have basic knowledge of handling electronic equipment.

1.3 Product documentation

1.3.1 Product documentation set

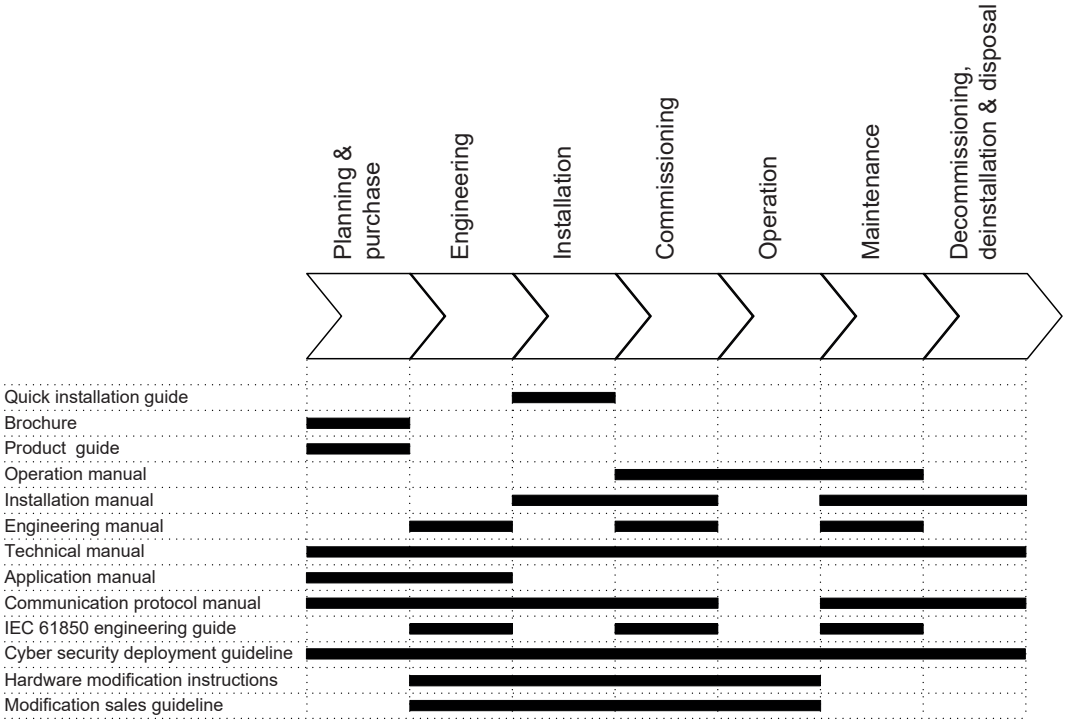

Figure 1: The intended use of documents during the product life cycle

1.3.2 Document revision history

Document revision/ date	Product connectivity level	History
A/2018-12-14	PCL1	First release
B/2019-08-15	PCL1	Content updated
C/2020-02-13	PCL2	Content updated to correspond to the product connectivity level
D/2020-12-09	PCL3	Content updated to correspond to the product connectivity level
E/2023-02-10	PCL4	Content updated to correspond to the product connectivity level

1.3.3 Related documentation

Download the latest documents from the ABB Web site *www.abb.com/mediumvoltage*.

1.4 Symbols and conventions

1.4.1 Symbols

The electrical warning icon indicates the presence of a hazard which could result in electrical shock.

The warning icon indicates the presence of a hazard which could result in personal injury.

The caution icon indicates important information or warning related to the concept discussed in the text. It might indicate the presence of a hazard which could result in corruption of software or damage to equipment or property.

The information icon alerts the reader of important facts and conditions.

The tip icon indicates advice on, for example, how to design your project or how to use a certain function.

Although the warning hazards are related to personal injury, it is necessary to understand that under certain operational conditions, operation of damaged equipment may result in degraded process performance leading to personal injury or death. Therefore, comply fully with all warning and caution notices.

1.4.2 Document conventions

A particular convention may not be used in this manual.

- Abbreviations and acronyms are spelled out in the glossary. The glossary also contains definitions of important terms.
- Menu paths are presented in bold.

  Select **Main menu** > **Settings**.
- Parameter names are shown in italics.

  The function can be enabled and disabled with the *Operation* setting
- Parameter values are indicated with quotation marks.

  The corresponding parameter values are "On" and "Off".
- Input/output messages and monitored data names are shown in Courier font.

When the function starts, the `START` output is set to TRUE.

- Values of quantities are expressed with a number and an SI unit. The corresponding imperial units may be given in parentheses.
- This document assumes that the parameter setting visibility is "Advanced".
- Protective earthing is indicated in figures with the symbol ⏚.

2 Environmental aspects

2.1 Sustainable development

Sustainability has been taken into account from the beginning of the product design including the pro-environmental manufacturing process, long life time, operation reliability and disposing of the device.

The choice of materials and suppliers has been made according to the EU RoHS directive (2011/65/EU). This directive limits the use of hazardous substances.

Operational reliability and long life time have been ensured with extensive testing during the design and manufacturing processes. Moreover, long life time is supported by maintenance and repair services as well as by the availability of spare parts.

Design and manufacturing have been done under a certified environmental system. The effectiveness of the environmental system is constantly evaluated by an external auditing body. We follow environmental rules and regulations systematically to evaluate their effect on our products and processes.

2.2 Disposal of a device

Definitions and regulations of hazardous materials are country-specific and change when the knowledge of materials increases. The materials used in this product are typical for electric and electronic devices.

All parts used in this product are recyclable. When disposing of a device or its parts, contact a local waste handler who is authorized and specialized in disposing of electronic waste. These handlers can sort the material by using dedicated sorting processes and dispose of the product according to the local requirements.

Table 1: Materials of the protection relay parts

Protection relay	Parts	Material
Case	Casted enclosure	Aluminium
	Metallic plates	Aluminium
	Screws, bushes	Steel
	Plastic parts	PC [1], LCP [2]
	LHMI	Various
Package	Box	Cardboard
Attached material	Manuals	Paper

[1] Polycarbonate
[2] Liquid crystal polymer

3 Unpacking, inspecting and storing

3.1 Removing transport packaging

Protection relays require careful handling.

1. Examine the delivered products to ensure that they have not been damaged during the transport.
2. Remove the transport packaging carefully without force.
3. Attach the protective cover (supplied with the relay) on the top side of the relay for the installation phase.

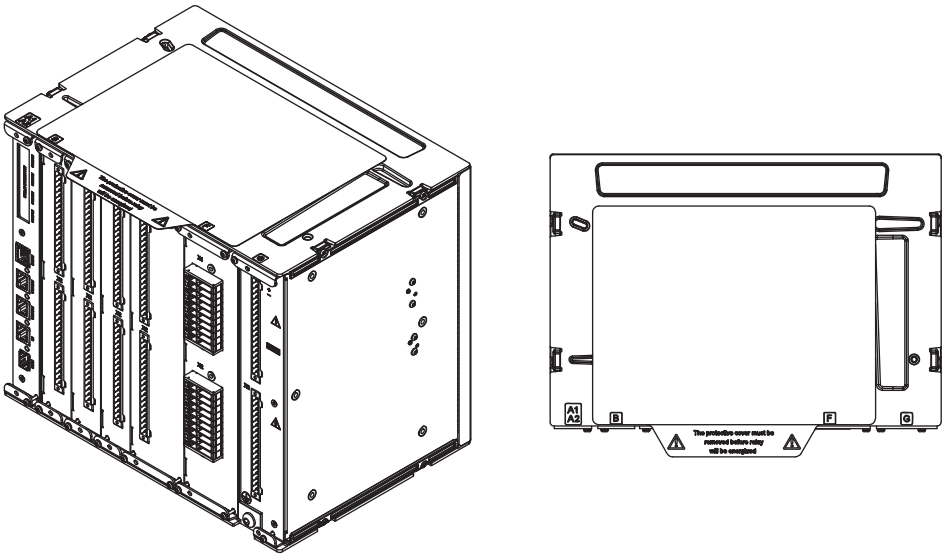

Figure 2: Attaching the protective cover on the top of the relay

The cardboard packaging material is 100% recyclable.

3.2 Inspecting product and delivery items

3.2.1 Identifying product

1. Locate the protection relay's order number on the label attached to the protection relay's case.
2. Compare the protection relay's order number with the ordering information to verify that the received product is correct.

3.2.2 Checking delivery items

- Check that all items are included in the delivery in accordance with the delivery documents.

3.2.3 Inspecting product

Protection relays require careful handling before installation on site.

- Check the protection relay to see if any damage occurred during transportation.

If the protection relay has been damaged during transportation, make a claim against the transport contractor, and notify the local ABB representative.

3.2.4 Returning a product damaged in transportation

If damage has occurred during transportation, appropriate actions must be taken against the latest carrier. Inform the nearest ABB office or representative.

ABB should be notified immediately if there are any discrepancies in relation to the delivery documents.

3.3 Storing

If the protection relay is stored before installation, it must be done in the original transport packaging in a dry and dust-free place.

- Observe the environmental requirements stated in the technical manual.

4 Mounting

4.1 Required tools

- TX25 and TX30 screwdrivers for installing the protection relay with mounting kits
- TX25 and TX20 screwdrivers for mounting the LHMI

4.2 Checking environmental conditions and mounting space

The mechanical and electrical environmental conditions at the installation site must be within the limits described in the technical manual.

- Avoid installation in dusty, damp places.

  Avoid places susceptible to rapid temperature variations, powerful vibrations and shocks, surge voltages of high amplitude and fast rise time, strong induced magnetic fields or similar extreme conditions.
- Check that sufficient space is available.

  Sufficient space is needed at the front and rear of the protection relay to allow access to wires and optical fibers to provide sufficient ventilation to the protection relay and to enable maintenance and future modifications.
- Ensure that flush-mounted protection relays can be added and replaced without excessive dismantling.

  If the UL enclosure rating should be higher than Type 1, the HMI unit must be installed behind an observation window. Only the HMI flush-mounting option is supported.

  UL listed observation windows:

  - FTTA/7, Model AMHMI120CCHTP, manufactured by Allied Moulded Products Inc, measuring overall 302.91 mm × 257.70 mm × 57.68 mm (11.9256 in × 10.1457 in × 2.2709 in), rated for 1, 2, 3, 3R, 4, 4X, 12 and 13.
  - Alternatively, any FTTA/7 or NITW rated for 1, 2, 3, 3R, 4, 4X, 12 and 13.

4.3 Mounting options

4.3.1 Mounting local HMI

4.3.1.1 Flush mounting local HMI

1. Make a cutout for the LHMI according to the dimensional drawing.

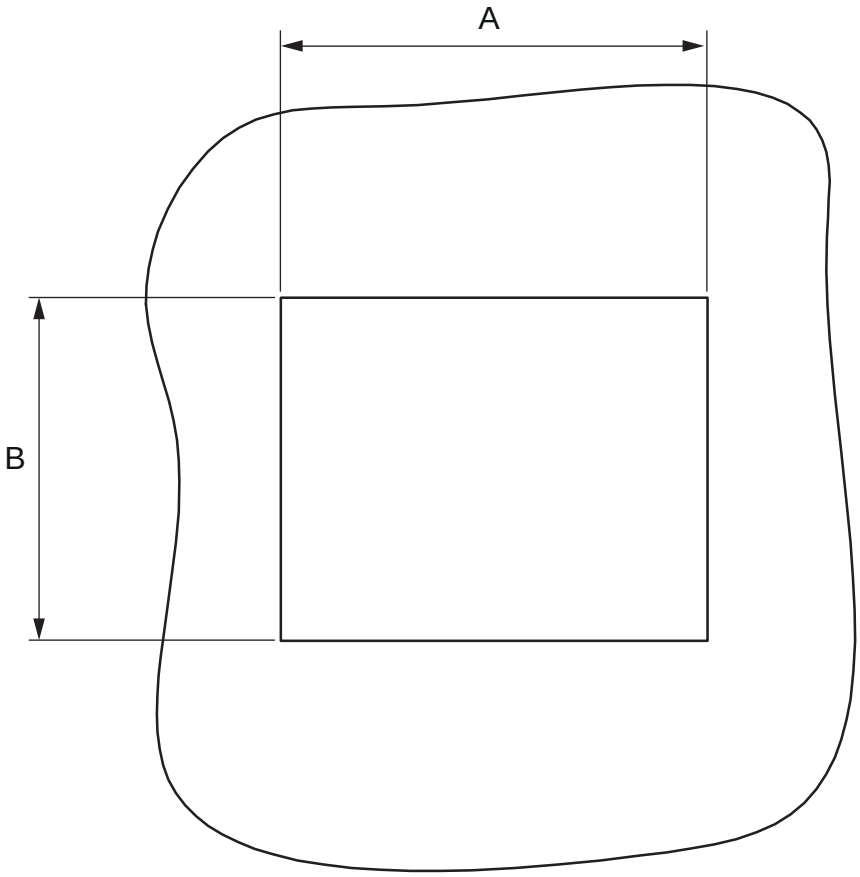

A 188 ±1 mm (7.4016 ±0.03937 in) B 151 ±1 mm (5.9449 ±0.03937 in)

Figure 3: Making a cutout

2. Mount the LHMI to the cutout with the installation brackets and screws.

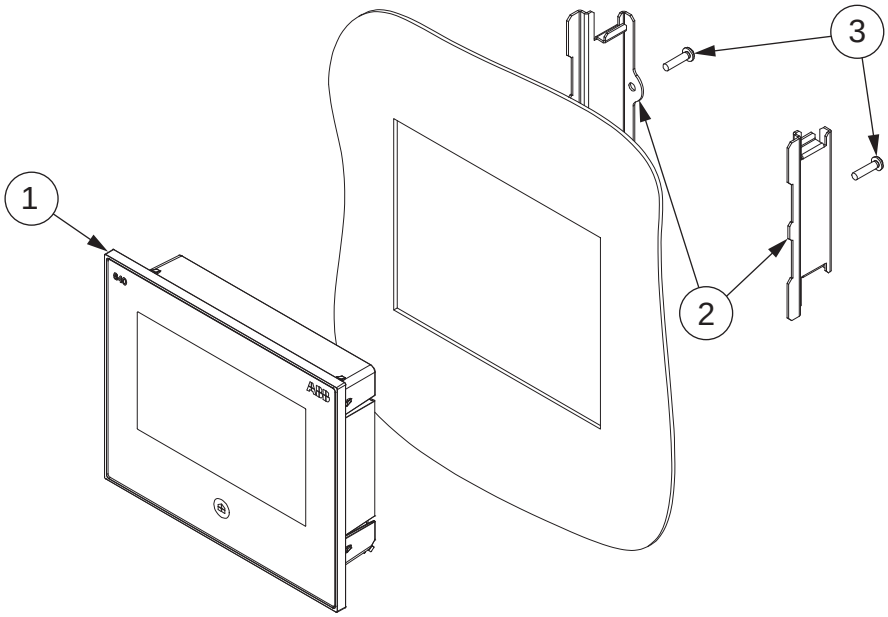

1 LHMI
2 Installation brackets
3 Screws

Figure 4: Mounting the local HMI to the cutout

3. Tighten the screws evenly to 3.5 Nm ±5% (2.5815 ft-lb ±5%).

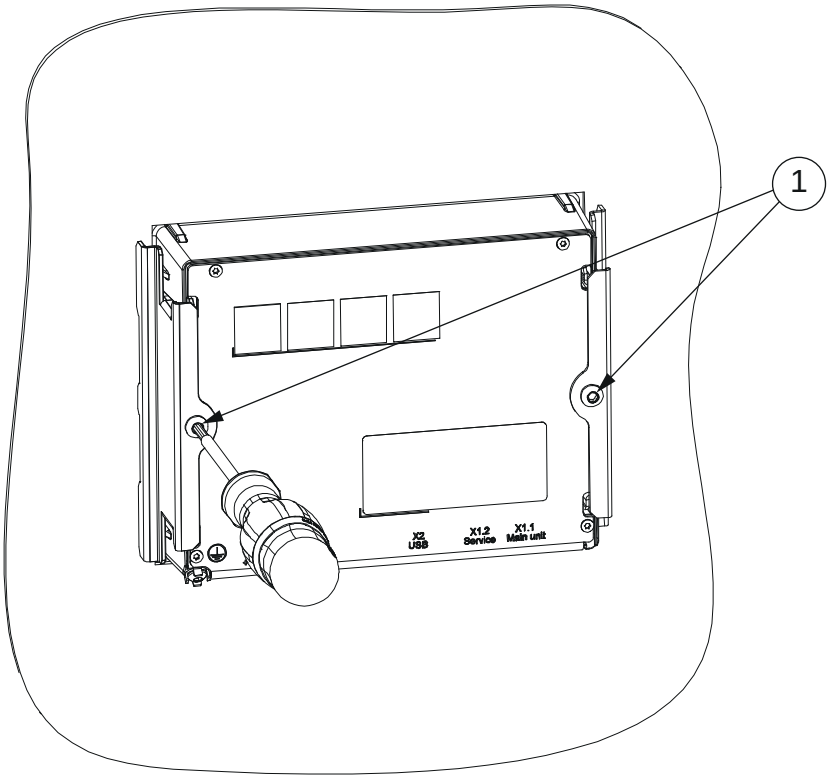

1 Screws

Figure 5: Tightening the screws

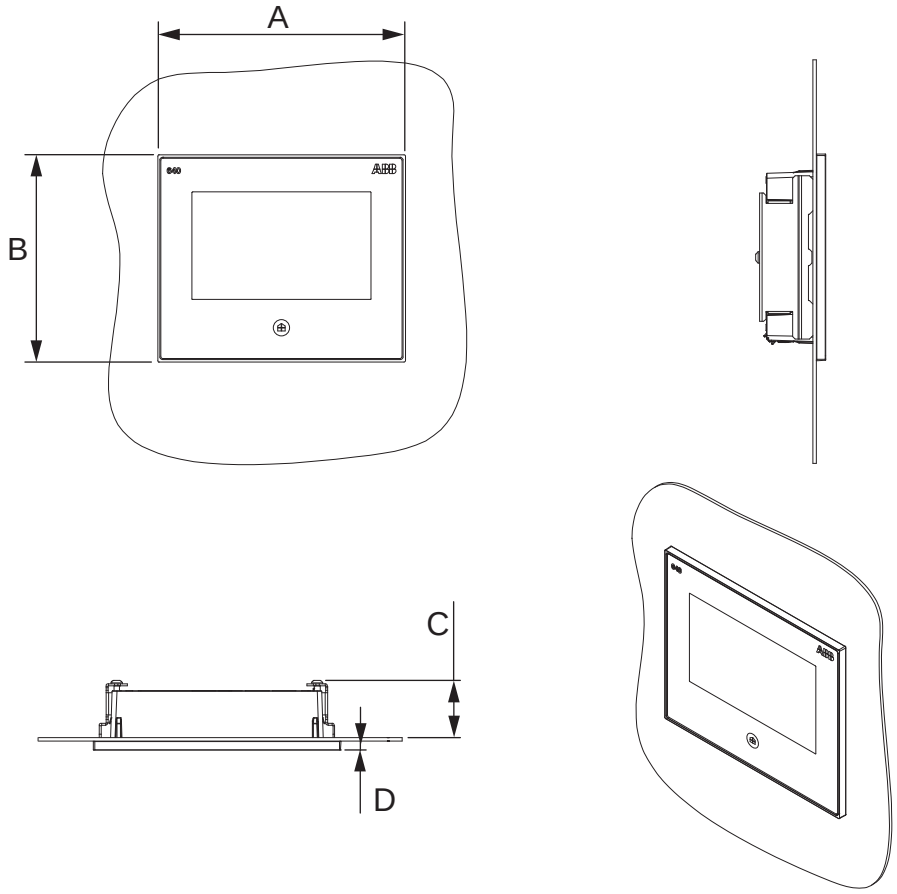

A	212.5 mm (8.3661 in)	C	50.0 mm (1.9685 in)
B	177.5 mm (6.9882 in)	D	7.6 mm (0.2992 in)

Figure 6: Flush mounted local HMI

4.3.1.2 Surface mounting local HMI

1. Make a cutout for the LHMI and drill holes for the raising frame according to the dimensional drawing.

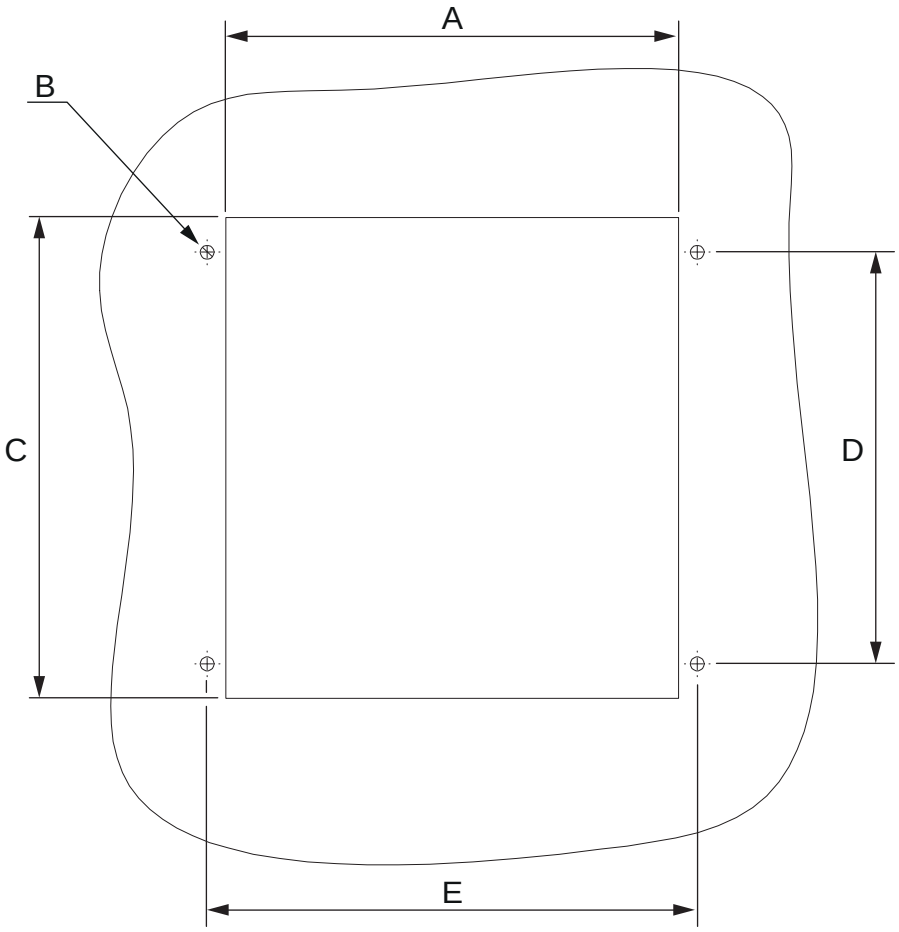

A	197 ±1 mm (7.7559 ±0.03937 in)	D	179 ±0.4 mm (7.0472 ±0.01575 in)
B	Ø 6.0 mm (0.2362 in)	E	213 ±0.4 mm (8.3858 ±0.01575 in)
C	209 ±1 mm (8.2283 ±0.03937 in)		

Figure 7: Making a cutout and drilling holes

2. Mount the raising frame to the panel with the M5 screws.

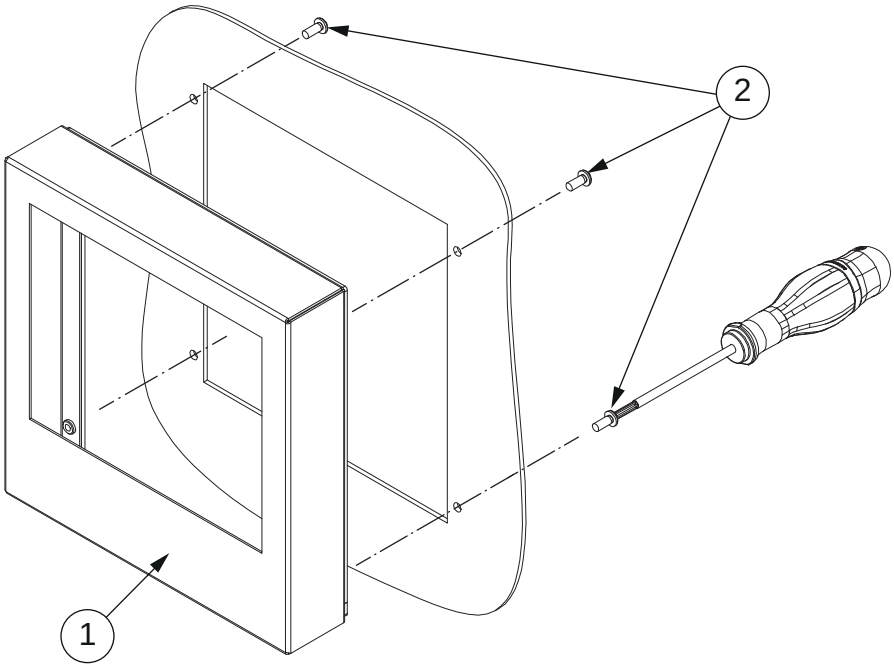

1 Raising frame 2 M5 screws

Figure 8: Mounting the raising frame

3. Tighten the screws to4 Nm ±5% (2.9502 ft-lb ±5%).

4. Mount the LHMI with the installation brackets.

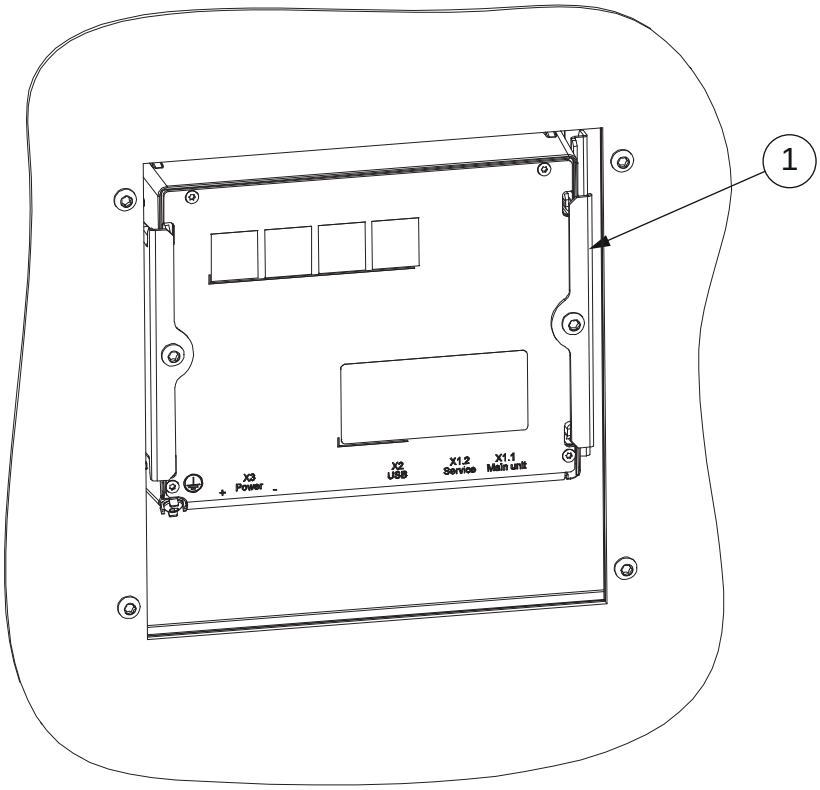

1 Installation brackets

Figure 9: Mounting the local HMI

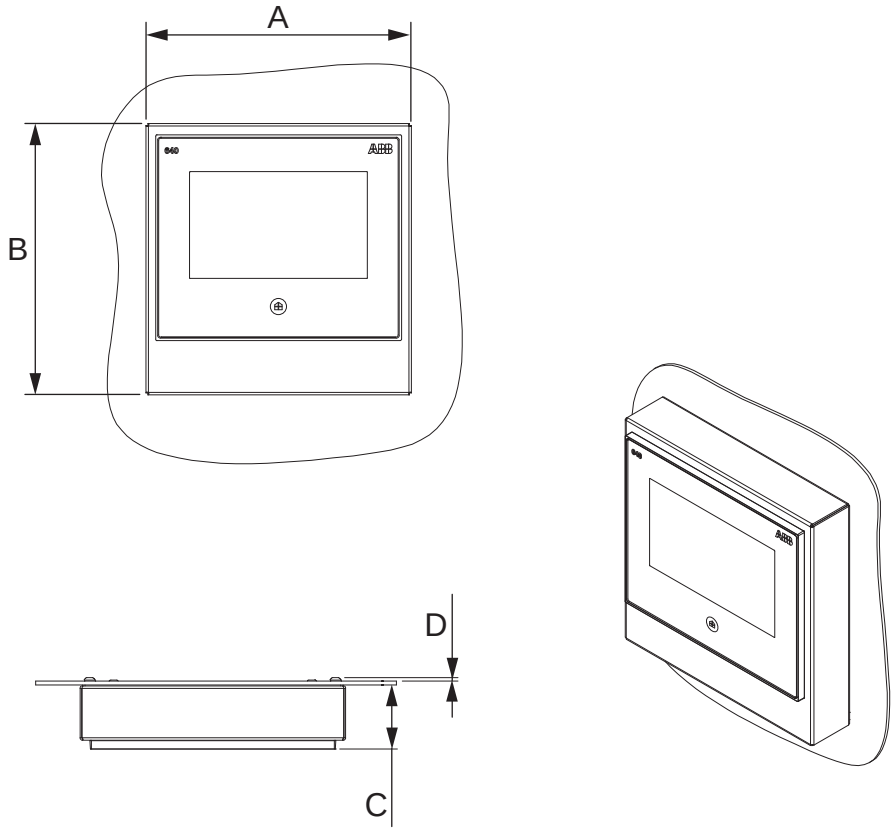

A	230.0 mm (9.0551 in)	C	56.0 mm (2.2047 in)
B	235.0 mm (9.2520 in)	D	3.5 mm (0.1378 in)

Figure 10: Surface mounted local HMI

4.3.1.3 Tilt/inclined mounting local HMI

1. Make a cutout for the LHMI and drill holes for the raising frame according to the dimensional drawing.

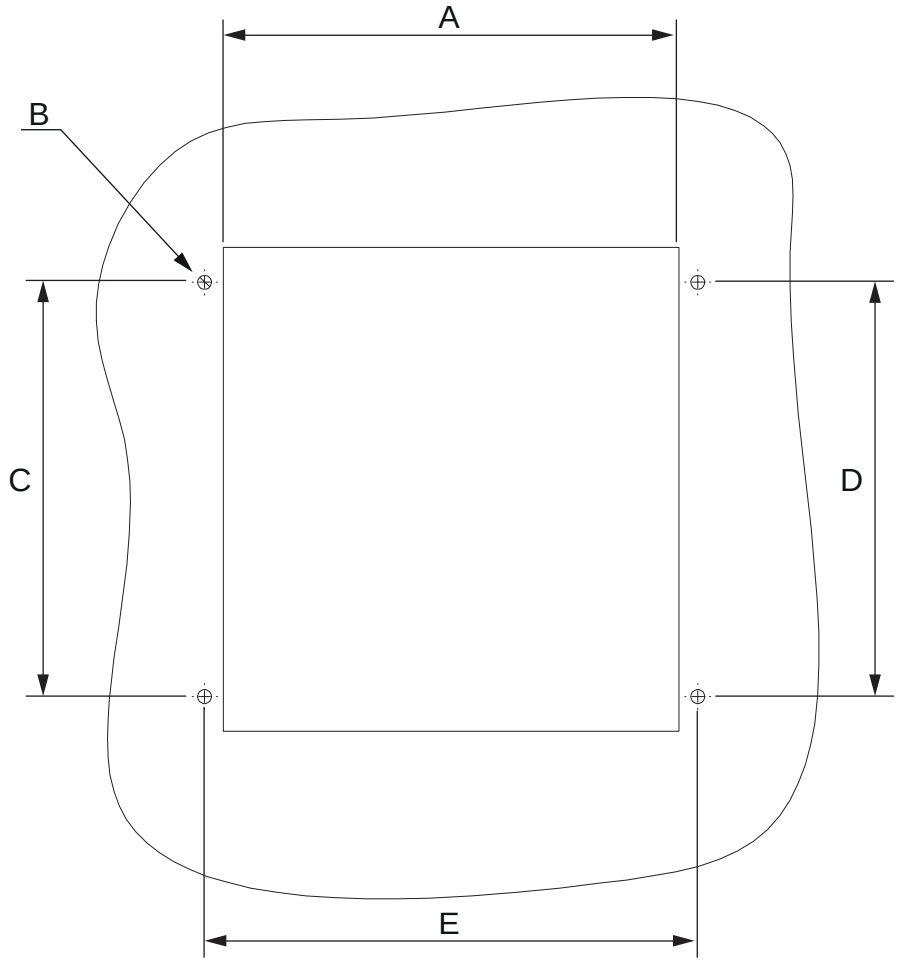

A	197 ±1 mm (7.7559 ±0.03937 in)	D	179 ±0.4 mm (7.0472 ±0.01575 in)
B	Ø 6.0 mm (0.2362 in)	E	213 ±0.4 mm (8.3858 ±0.01575 in)
C	209 ±1 mm (8.2283 ±0.03937 in)		

Figure 11: Making a cutout and drilling holes

2. Mount the tilt frame to the panel with M5 screws.

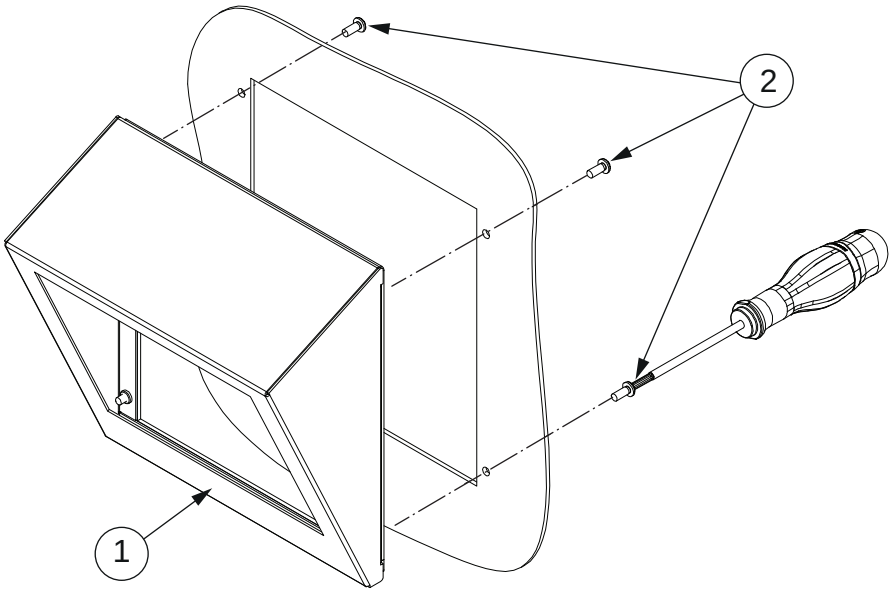

1 Tilt frame 2 M5 screws

Figure 12: Mounting the raising frame

3. Tighten the screws to 4 Nm ±5% (2.9502 ft-lb ±5%).
4. Mount the LHMI with the installation brackets.

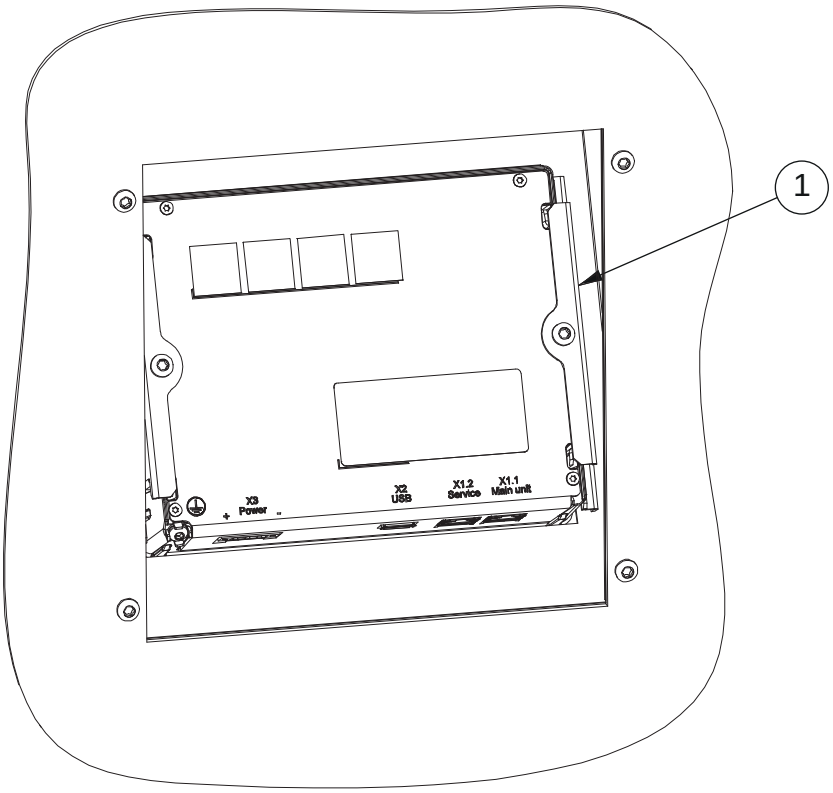

1 Installation brackets

Figure 13: Mounting the local HMI

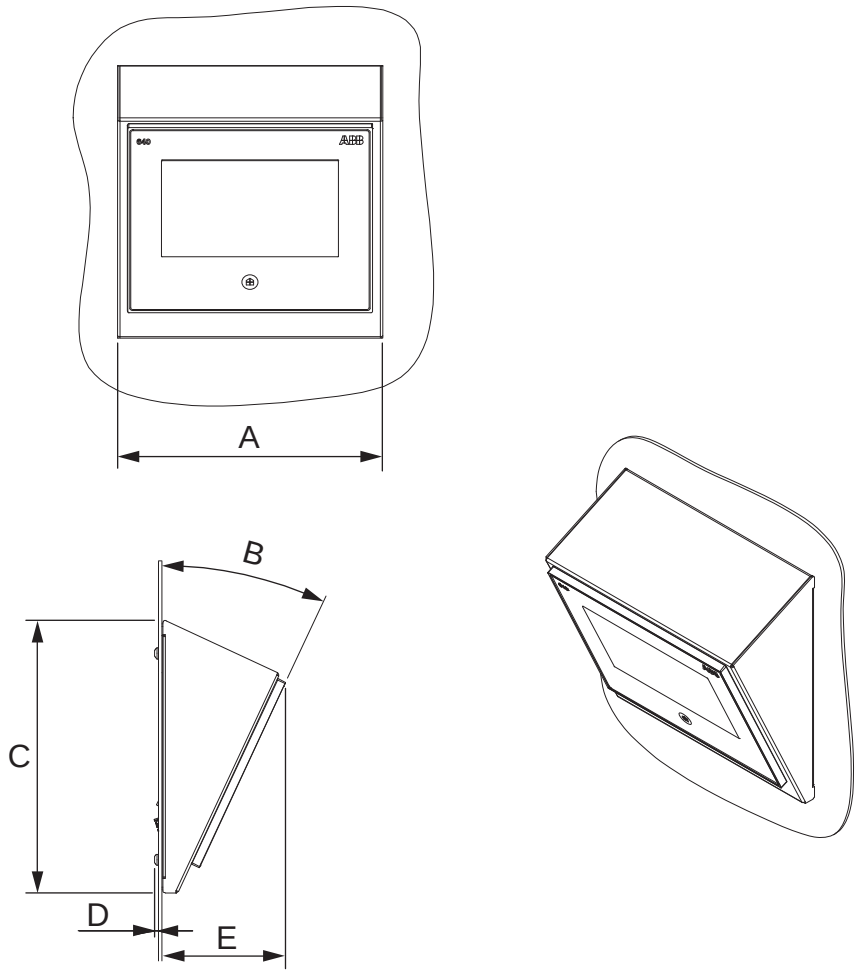

A	230.0 mm (9.0551 in)	D	3.5 mm (0.1378 in)
B	25°	E	108.0 mm (4.2520 in)
C	236.0 mm (9.2913 in)		

Figure 14: Tilt mounted local HMI

4.3.2 Mounting protection relay

4.3.2.1 Wall mounting protection relay

1. Drill four M5 screw holes according to the dimensional drawing.

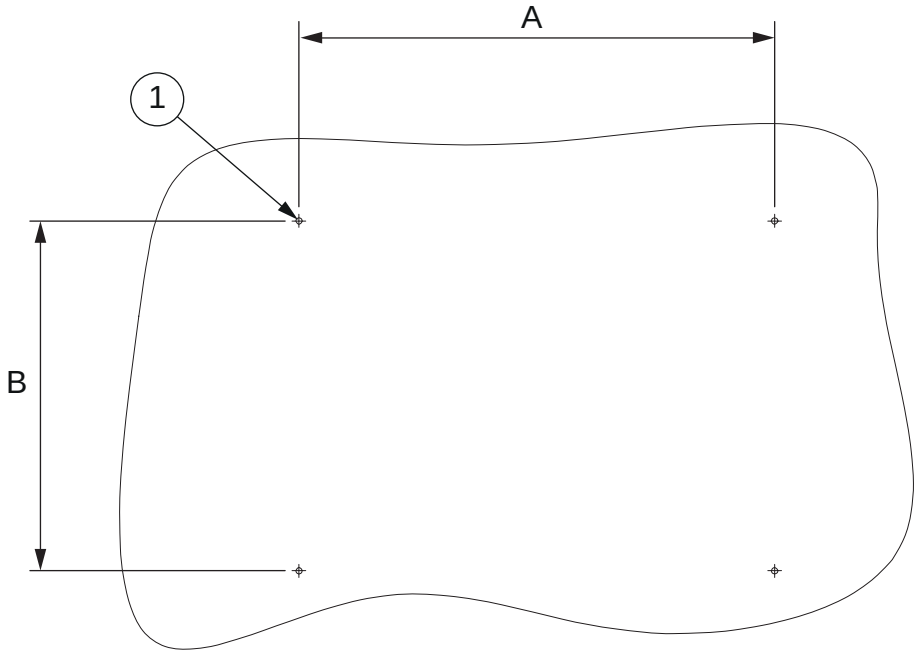

A 322 ±0.4 mm (12.6772 ±0.01575 in) 1 M5 hole
B 237 ±0.4 mm (9.3307 ±0.01575 in)

Figure 15: Drilling screw holes

2. Mount the M5 screws in the upper holes, but do not tighten them. Leave them 3...4 mm (0.1181...0.1575 in) open.

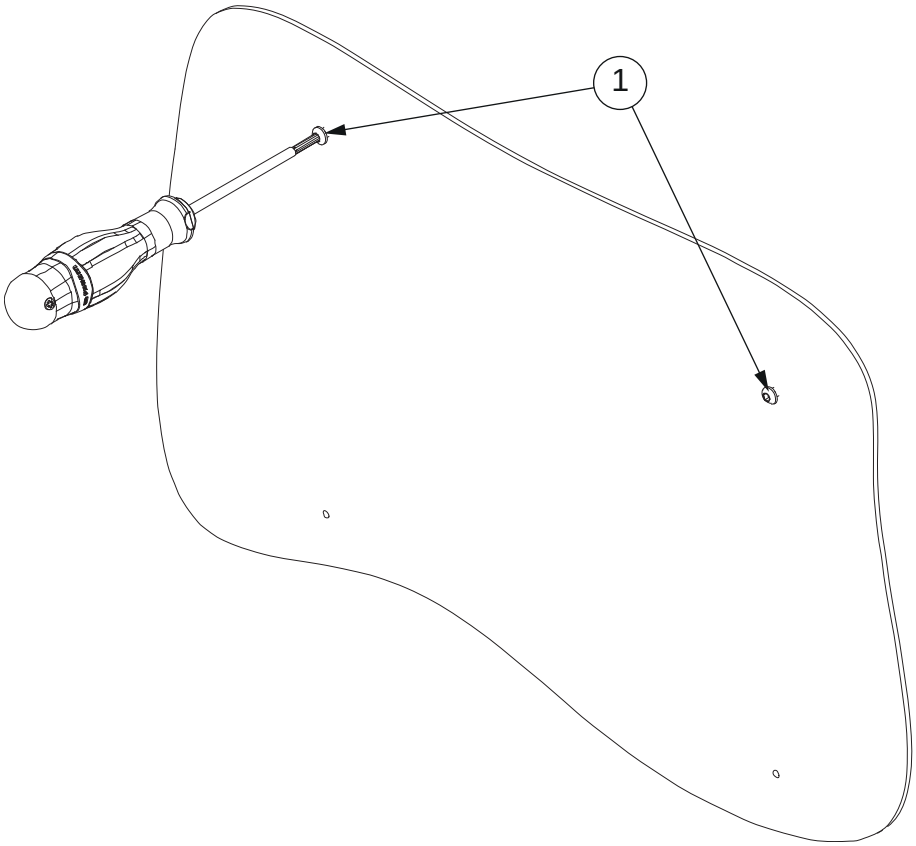

1 M5 screws

Figure 16: Mounting M5 screws in the upper holes

3. Attach the mounting bracket to the protection relay with M6 screws and tighten the screws to 9 Nm ±5% (6.6381 ft-lb ±5%).

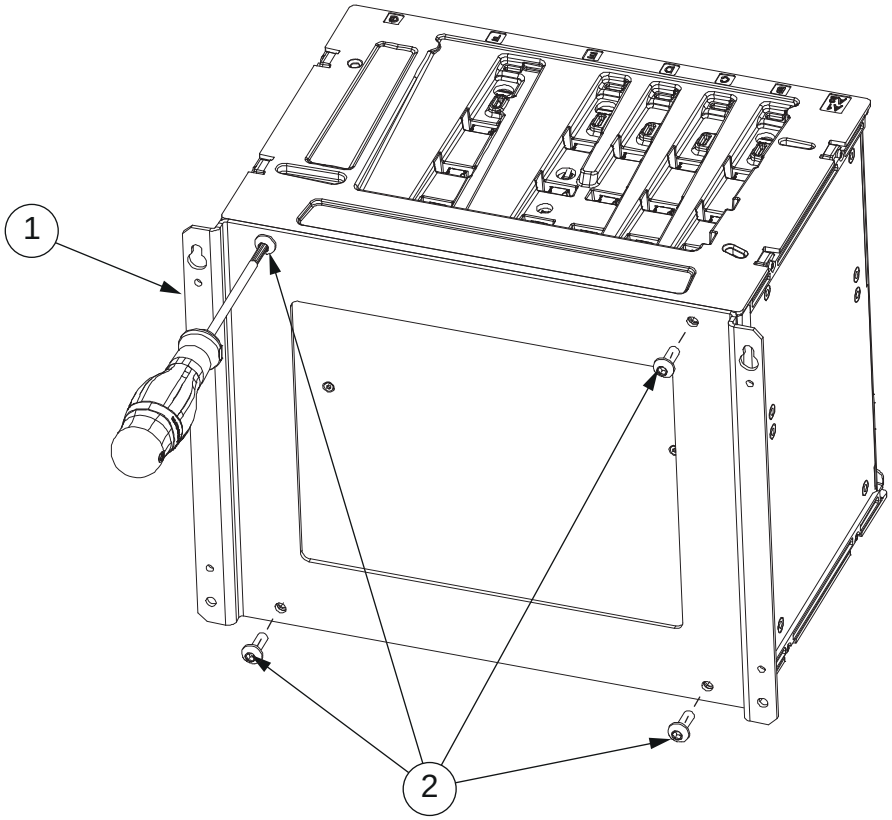

1 Mounting bracket 2 M6 screws

Figure 17: Mounting M6 screws

4. Lift the protection relay to its place on the existing screws on the panel.
5. Mount the M5 screws in the bottom holes.

6. Tighten all the M5 screws.

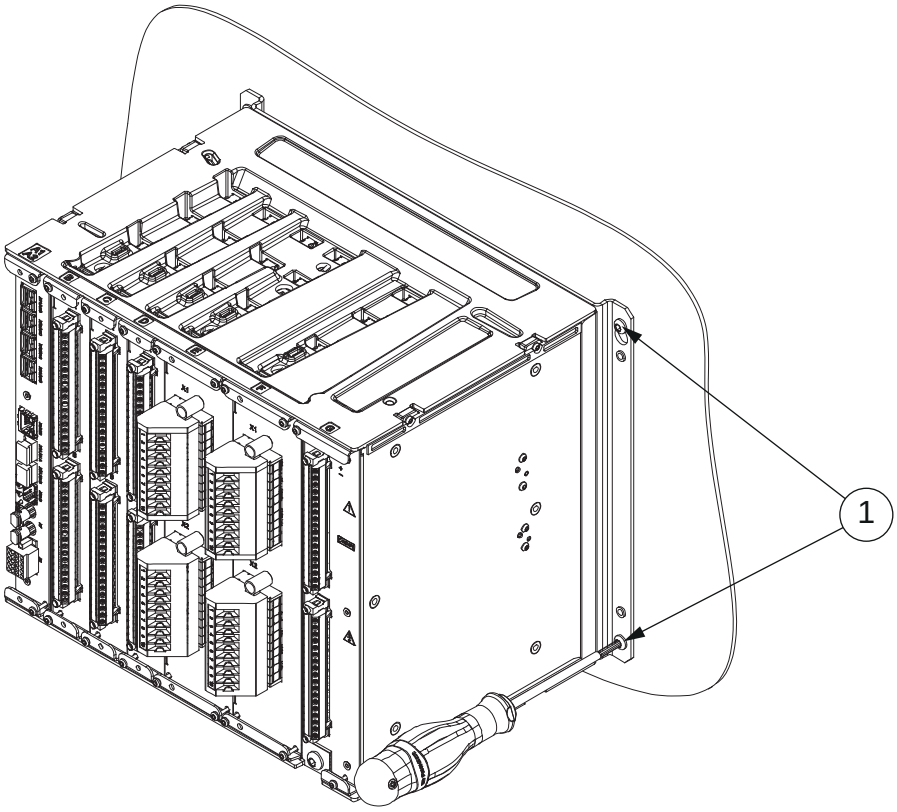

1 M5 screws

Figure 18: Mounting and tightening the M5 screws

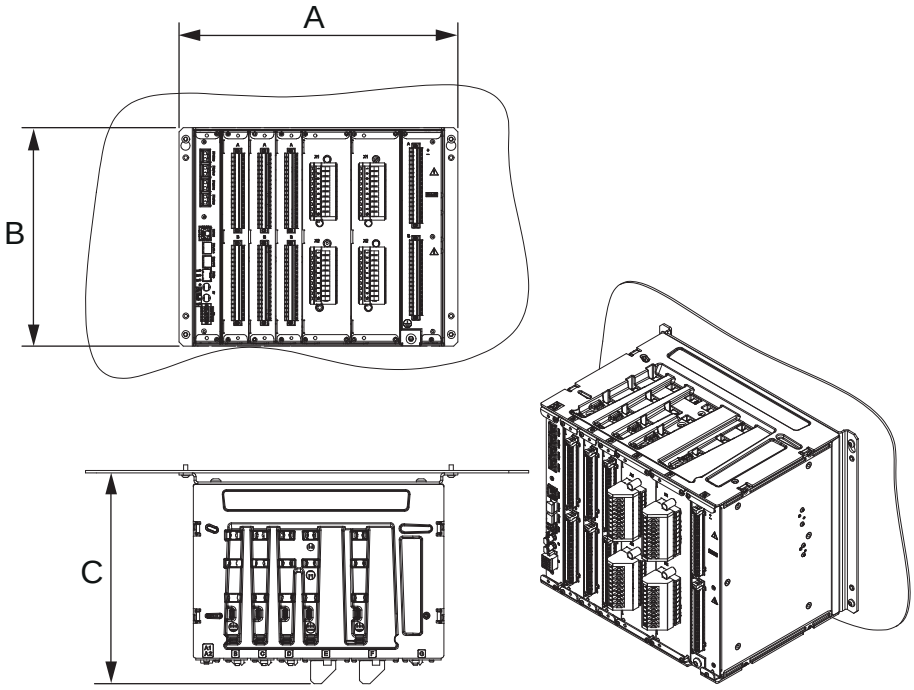

Figure 19: Wall mounted protection relay

A 338.0 mm (13.3071 in)

B 265.0 mm (10.4331 in)

C 255.7 mm (10.0669 in) with compression type CT/VT connectors
276.6 mm (10.8898 in) with ring-lug type CT/VT connectors
287.5 mm (11.3189 in) with a grounding bar

A minimum of 50 mm (1.9685 in) space is needed between two kits.

Check the allowed minimum bending radius from the optical cable manufacturer.

4.3.2.2 Roof mounting protection relay

1. Drill M5 screw holes or through holes to the roof inside the cabinet according to the dimensional drawing.

   A minimum of 50 mm (1.9685 in) space is needed from the back wall.

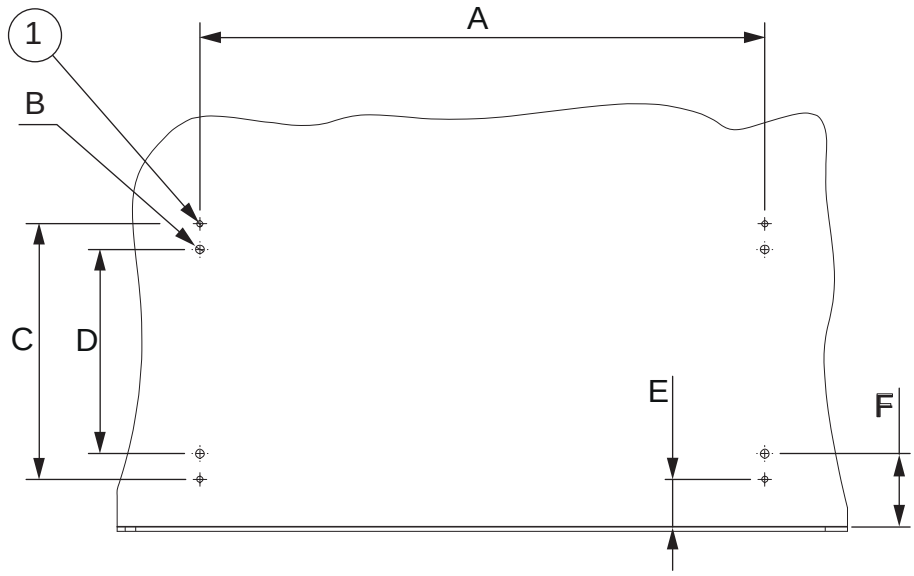

A	387.0 ±0.4 mm (15.2362 ±0.01575 in)	E	min. 32.5 mm (1.2795 in)
B	Ø 6.0 mm (0.2362 in)	F	min. 50 mm (1.9685 in)
C	175.0 ±0.4 mm (6.8898 ±0.01575 in)	1	M5 screw
D	140.0 ±0.4 mm (5.5118 ±0.01575 in)		

Figure 20: Drilling screw holes

2. Mount the roof mounting bracket to the roof with M5 screws using either the through holes on top of the cabinet or the M5 holes in the roof inside the cabinet.
3. Mount the M5 screws in the upper M5 holes of the roof mounting bracket, but do not tighten them. Leave them 3...4 (0.1181...0.1575 in) mm open.

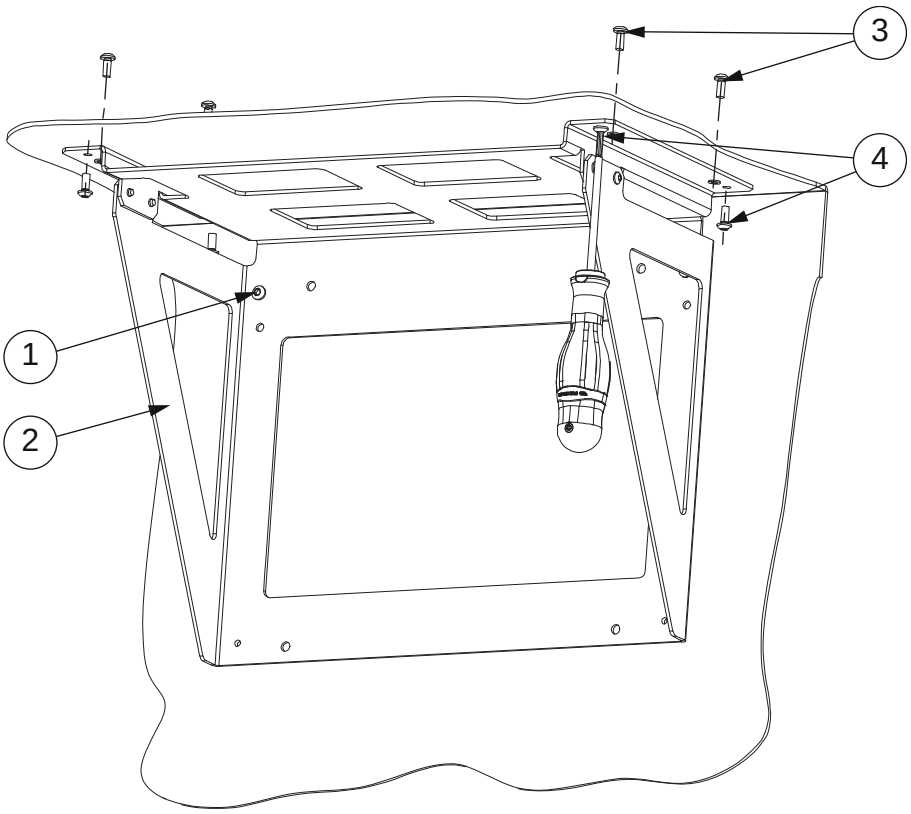

1 Upper M5 hole
2 Roof mounting bracket
3 M5 screws for holes on top of the cabinet
4 M5 screws for holes inside the cabinet

Figure 21: Mounting M5 screws

4. Attach the mounting bracket to the protection relay with M6 screws and tighten the screws to 9 Nm ±5% (6.6381 ft-lb ±5%).

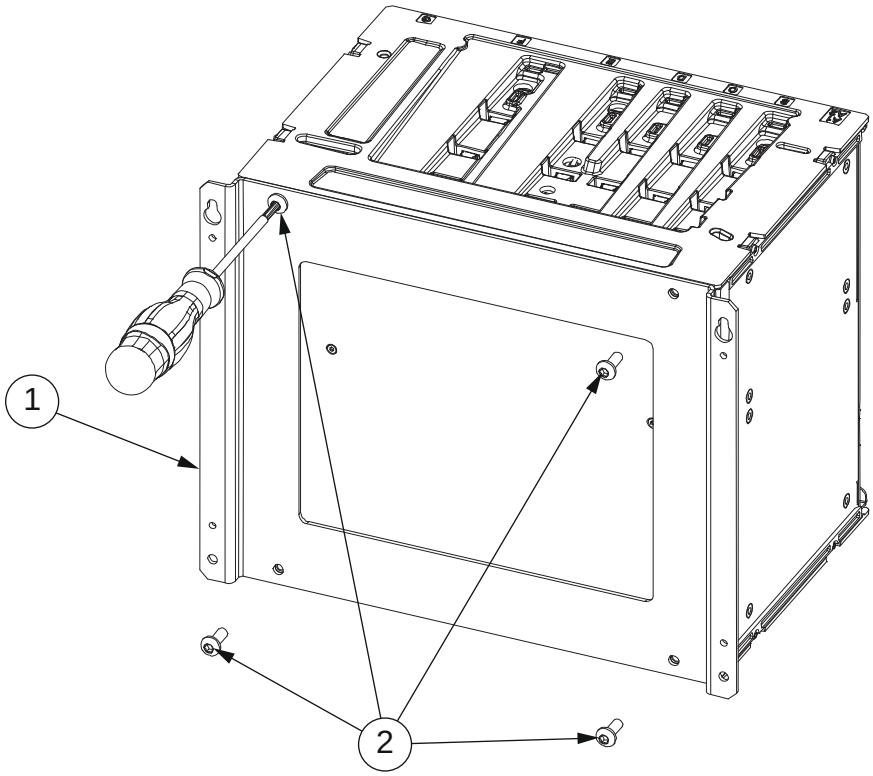

1 Mounting bracket 2 M6 screws

Figure 22: Mounting M6 screws

5. Lift the protection relay to its place on the existing screws on the roof mounting bracket.
6. Mount the M5 screws in the bottom holes.

7. Tighten the four M5 screws on the roof mounting bracket to 4 Nm ± 5 % (2.9502 ft-lb ±5%).

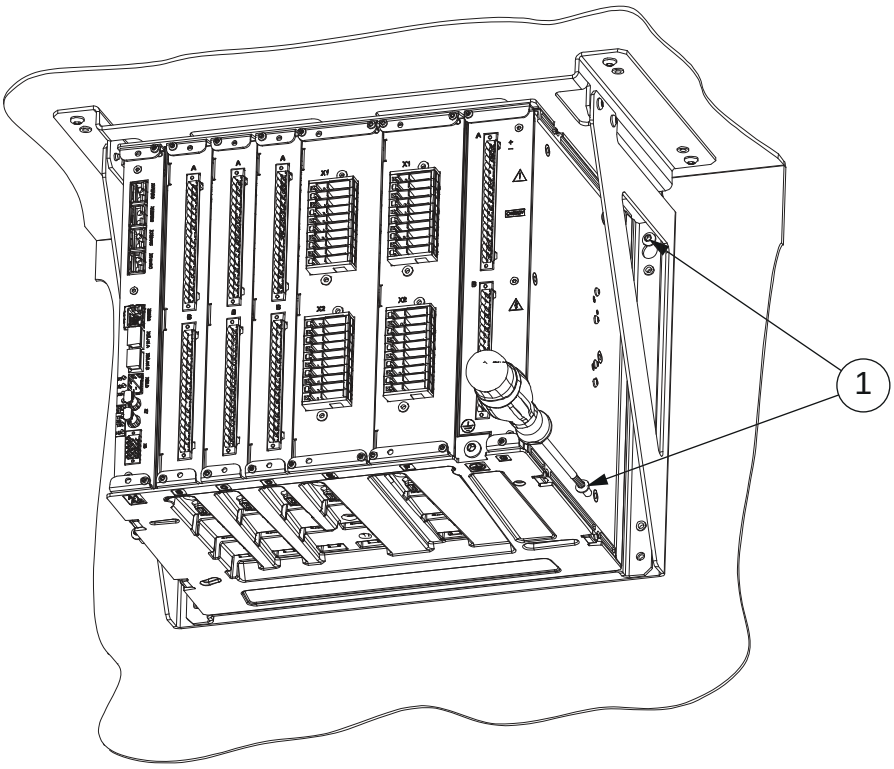

1 M5 screws

Figure 23: Mounting and tightening the M5 screws

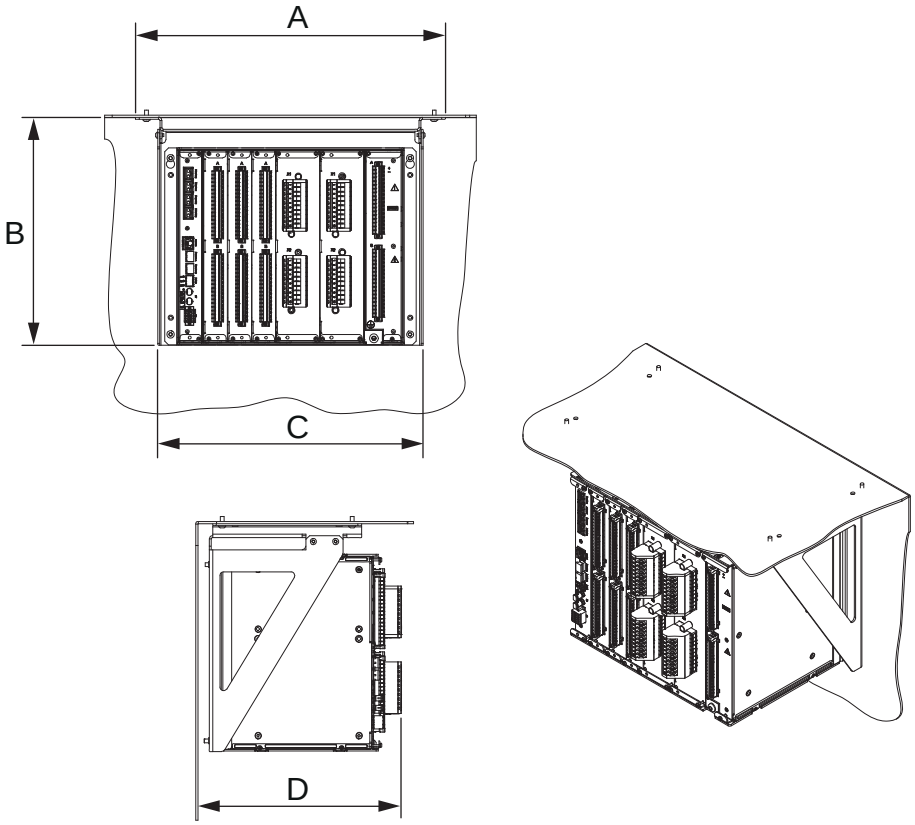

A	417.0 mm (16.4173 in)	C	357.0 mm (14.0551 in)
B	306.5 mm (12.0669 in)	D	273.5 mm (10.7677 in) with compression type CT/VT connectors 285.4 mm (11.2362 in) with ring-lug type CT/VT connectors 305.3 mm (12.0197 in) with a grounding bar

Figure 24: Roof mounted protection relay

4.3.2.3 Door mounting protection relay

1. Drill holes according to the dimensional drawing.

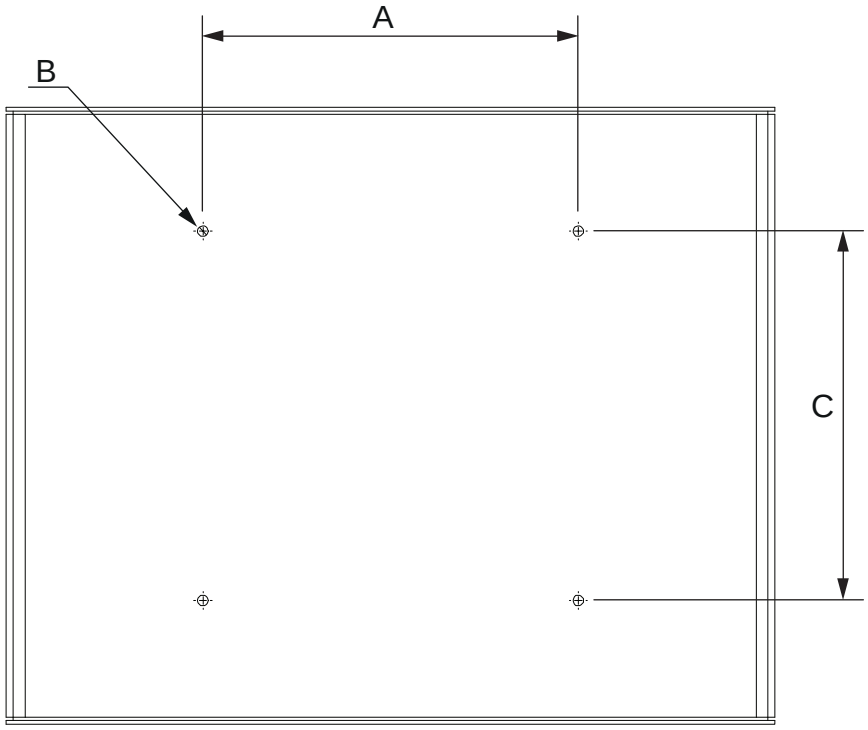

A 249 ±0.4 mm (9.8032 ±0.01575 in) C 245 ±0.4 mm (9.6457 ±0.01575 in)
B Ø 7.0 mm (0.2756 in)

Figure 25: Drilling holes

2. Mount the protection relay to the door or panel with the M6 screws.

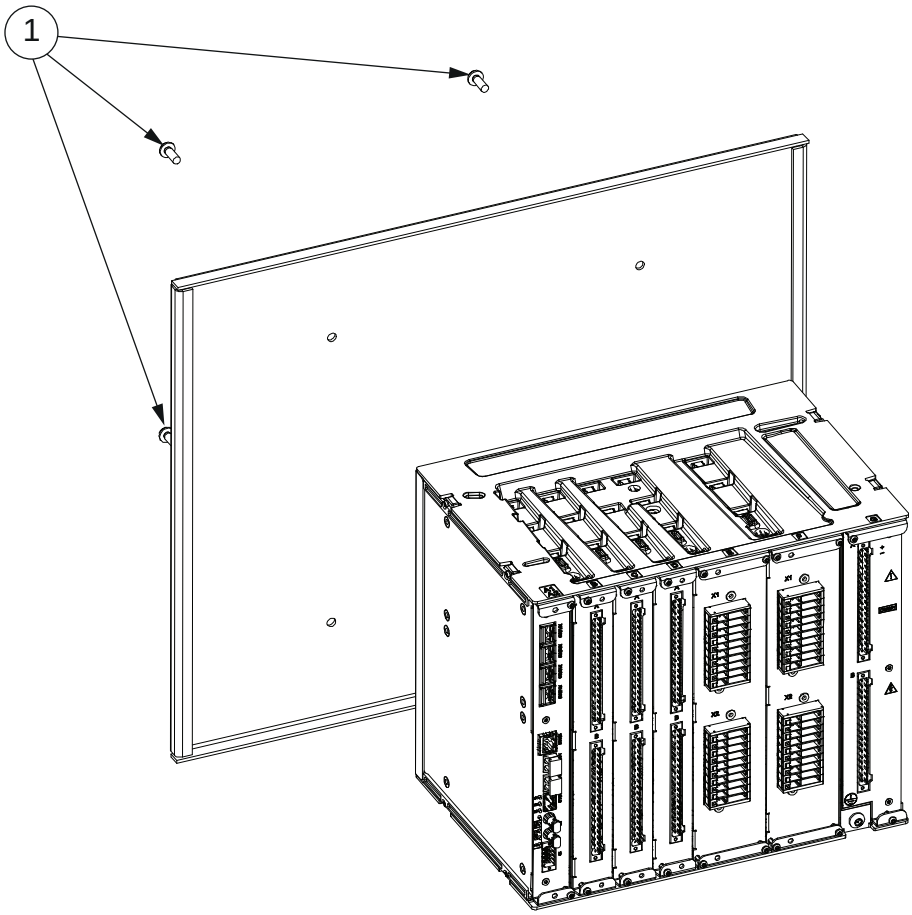

1 M6 screws

Figure 26: Mounting the protection relay to the door

3. Tighten the four M6 screws to 9 Nm ±5% (6.6381 ft-lb ±5%).

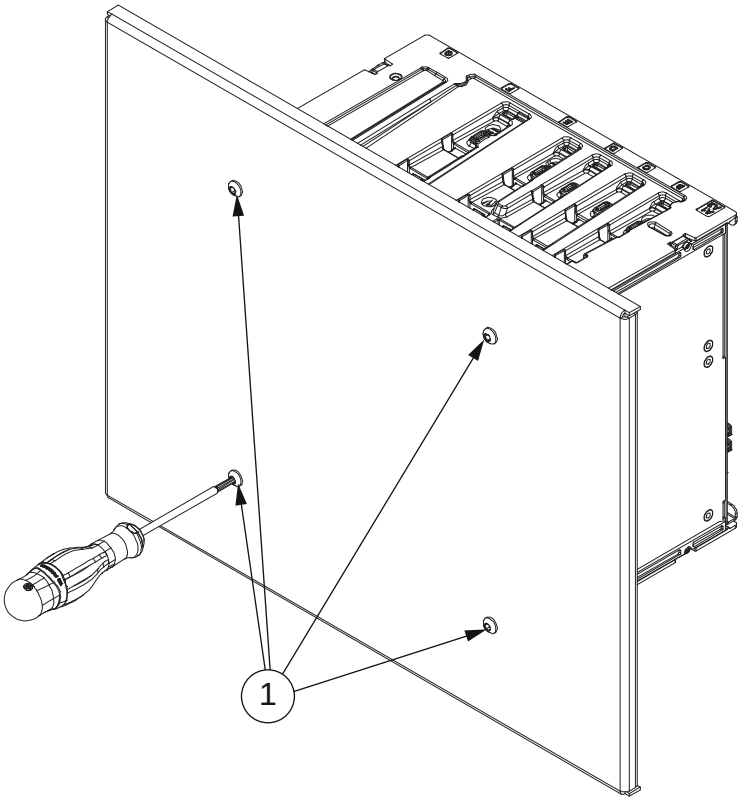

1 M6 screws

Figure 27: Tightening the M6 screws

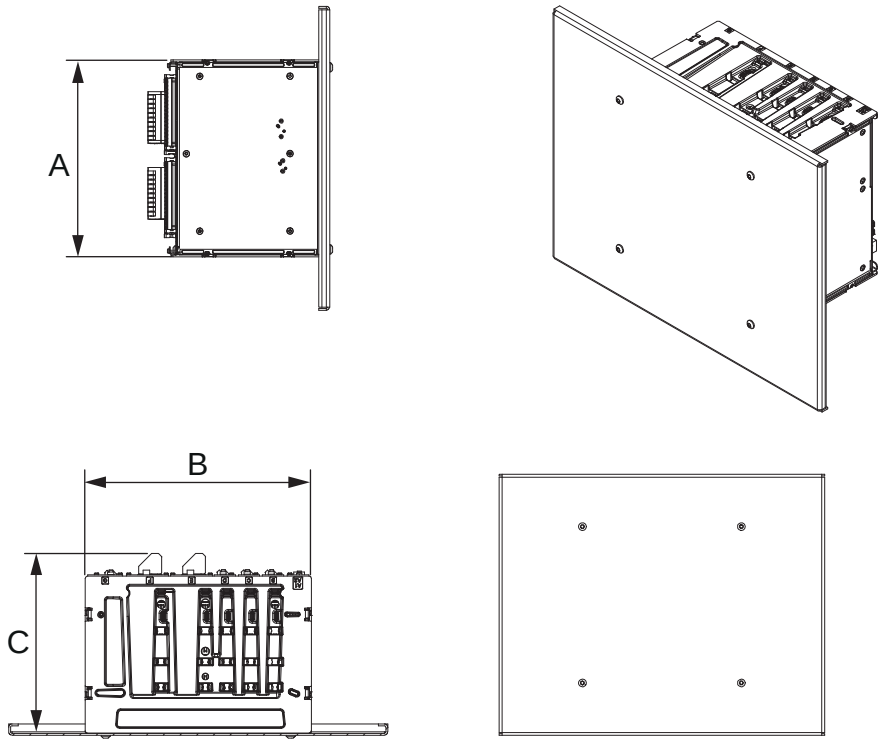

A 264.8 mm (10.4252 in)
B 304.0 mm (11.9685 in)
C 242.2 mm (9.5354 in) with compression type CT/VT connectors
254.1 mm (10.0039 in) with ring-lug type CT/VT connectors
274.0 mm (10.7874 in) with a grounding bar

Figure 28: Door mounted protection relay

4.3.2.4 Rack mounting protection relay

1. Attach the protection relay to a 7U rack plate with M6 screws.

2. Tighten the M6 screws to 9 Nm ±5% (6.6381 ft-lb ±5%).

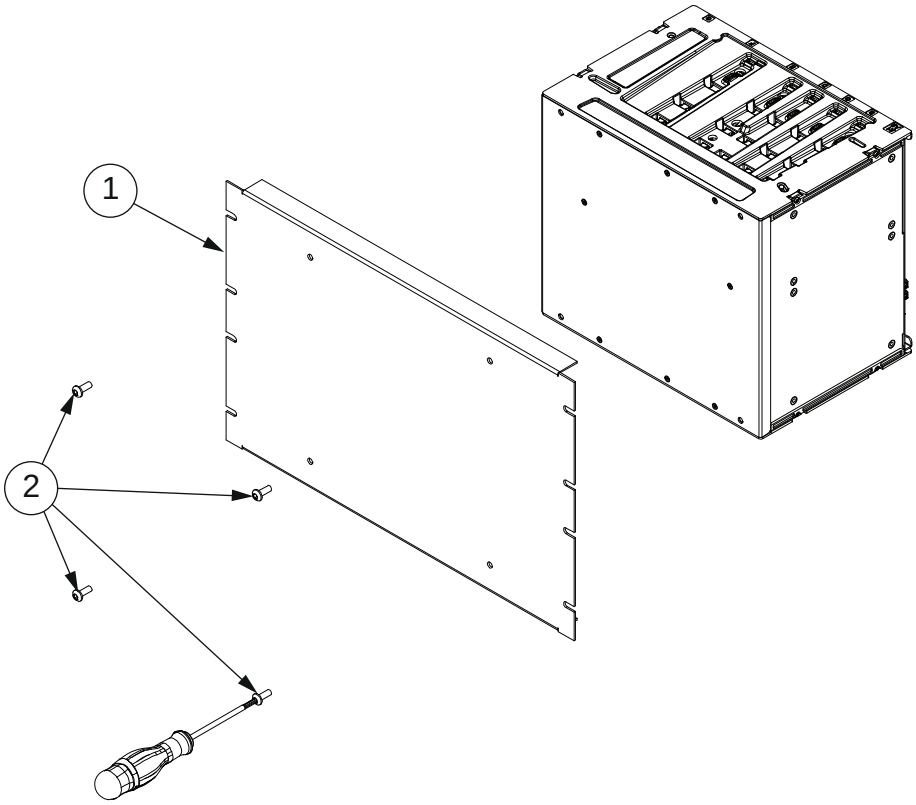

1 7U rack plate 2 M6 screws

Figure 29: Mounting the protection relay to the rack plate

3. Mount the protection relay and rack plate to a 19" rack.

   The rack plate can also be mounted to the rack before the protection relay is attached to it.

4. Tighten the screws.

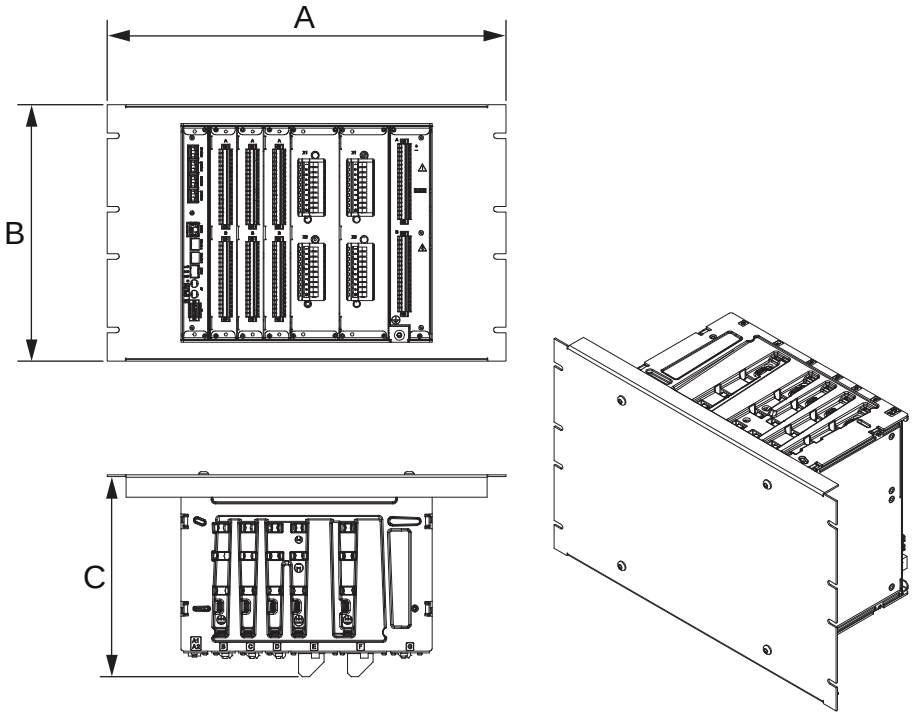

A	482.60 mm (19 in)	C	242.20 mm (9.5354 in) with compression type CT/VT connectors 254.10 mm (0.0039 in) with ring-lug type CT/VT connectors 274.00 mm (10.7874 in) with a grounding bar
B	310.35 mm (12.2185 in), 7U		

Figure 30: Rack mounted protection relay

Check the allowed minimum bending radius from the optical cable manufacturer.

4.3.3 Mounting protection relay with local HMI

4.3.3.1 Rack mounting protection relay with local HMI and RTXP 24 test switch

REX640 has two rack mounting options for the relay, HMI and RTXP 24 test switch. Contents of the installation kits are identical apart from the 6U or 7U high rack plates.

Table 2: Rack mounting installation kits

Part number	Description
2RCA051498A0001	19 inch relay rack mounting for relay and LHMI, including a provision for RTXP 24 test switch, 6U [1]
2RCA051503A0001	19 inch relay rack mounting for relay and LHMI, including a provision for RTXP 24 test switch, 7U [1]

1. Mount the LHMI and the mounting bracket to the rack plate.
   a) Attach the 6U or 7U rack plate to the rack frame.
   b) Mount the LHMI with its own installation brackets to the LHMI cutout.
2. Mount the relay.
   a) Mount the relay to the door mounting bracket using M5 screws.
   b) Mount the relay and door mounting bracket assembly to the rack plate using M6 screws.
3. Mount the RTXP 24 assembly part to the rack plate using hexagon nuts and spring washers.
4. Install the RJ-45 coupler with a cable to the panel cutout and connect the cable to the LHMI's service port X1.2.

[1] Powder painting, RAL 7035 flat. (Gloss: 60L 65-85 acc. to EN-ISO 2813)

5. Install the RTXP test switch to the assembly part using torx pan head tapping screw ST3.5x13.

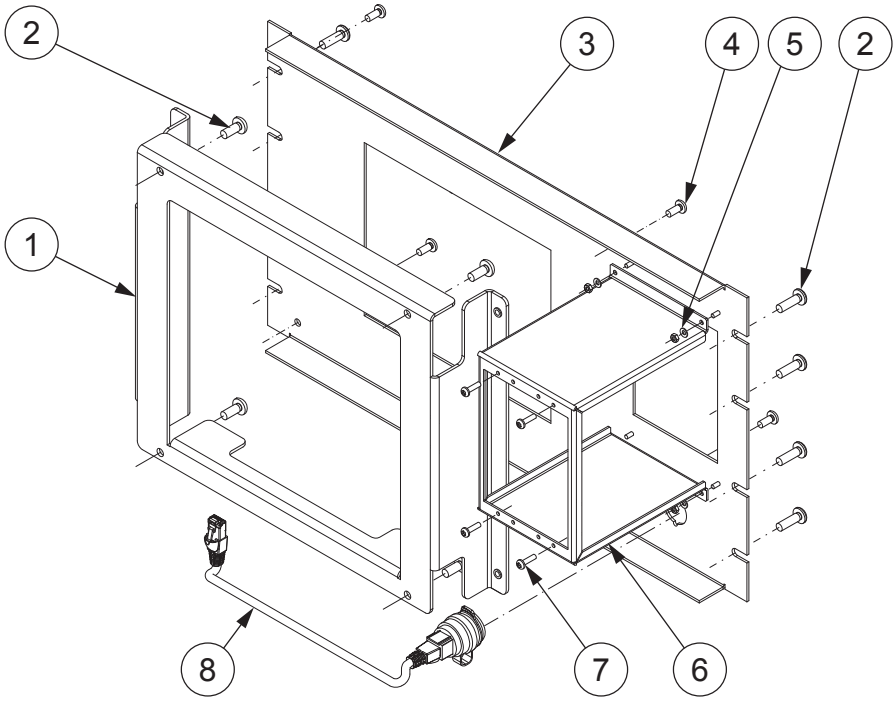

1	Door mounting bracket	5	M3 screws
2	M6 screws	6	RTXP 24 mounting part
3	6U or 7U rack plate	7	ST3.5 screws
4	M5 screws	8	RJ-45 coupler with a cable

Figure 31: Installation kit contents

4.3.3.2 Door mounting protection relay with local HMI

1. Make a cutout for the LHMI and drill holes for the mounting bracket according to the dimensional drawing.

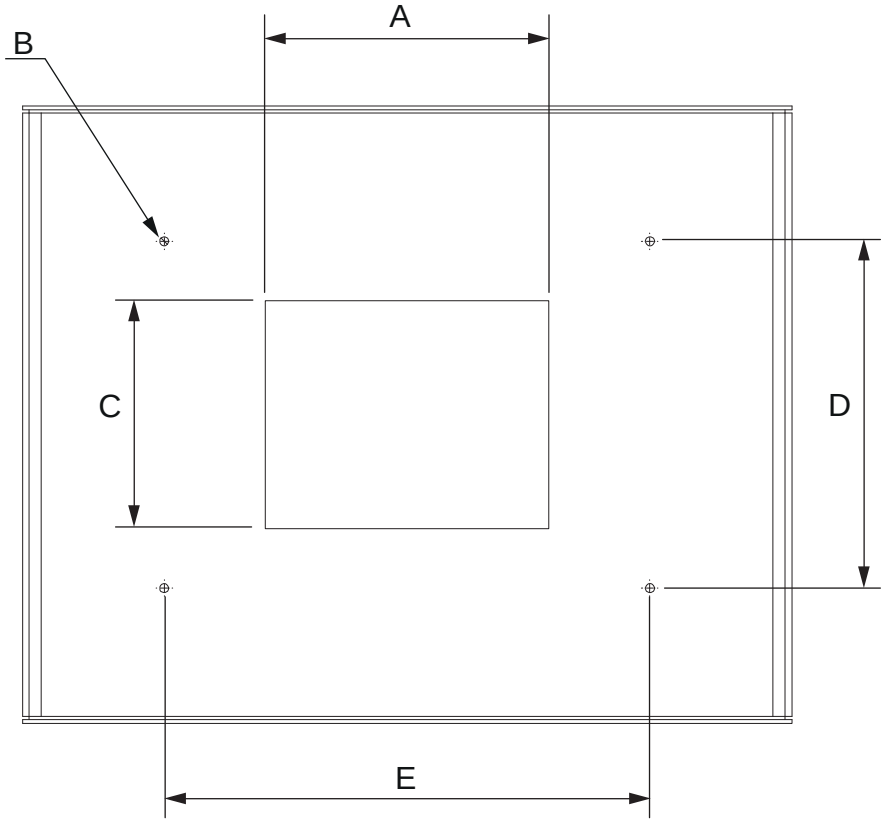

A	188 ±1 mm (7.4016 ±0.03937 in)	D	230 ±0.4 mm (9.0551 ±0.01575 in)
B	Ø 6.0 mm (0.2362 in)	E	322 ±0.4 mm (12.6772 ±0.01575 in)
C	151 ±1 mm (5.9449 ±0.03937 in)		

Figure 32: Drilling holes

2. Mount the LHMI and the mounting bracket to the door panel.
   a) Mount the LHMI with its own installation brackets to the LHMI cutout.
   b) Mount the mounting bracket to the door panel with the M5 screws.
   c) Tighten the M5 screws to 4 Nm ±5% (2.9502 ft-lb ±5%).
   d) Mount the M5 screws in the upper holes of the mounting bracket, but do not tighten them. Leave them 3...4 mm (0.1181...0.1575 in) open.

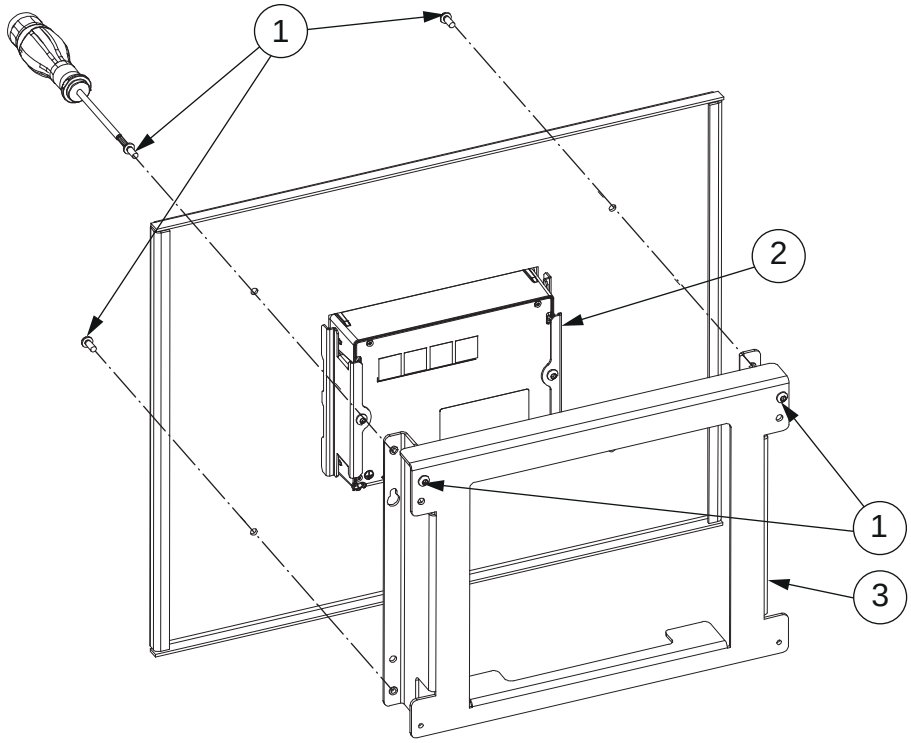

1 M5 screws
2 LHMI installation brackets
3 Mounting bracket

Figure 33: Mounting the local HMI and mounting brackets

3. Attach the mounting bracket to the protection relay with the M6 screws.

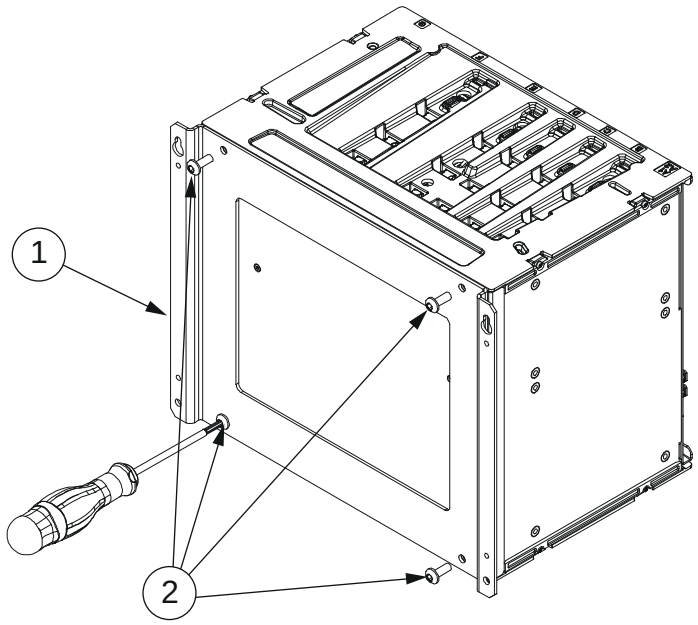

1 Mounting bracket
2 M6 screws

Figure 34: Attaching the mounting bracket to the protection relay

4. Tighten the M6 screws to 9 Nm ±5% (6.6381 ft-lb ±5%).
5. Lift the protection relay to its place on the existing screws on the bracket.

6. Mount the M5 screws in the bottom holes.
7. Tighten the four M5 screws to (2.9502 ft-lb ±5%).

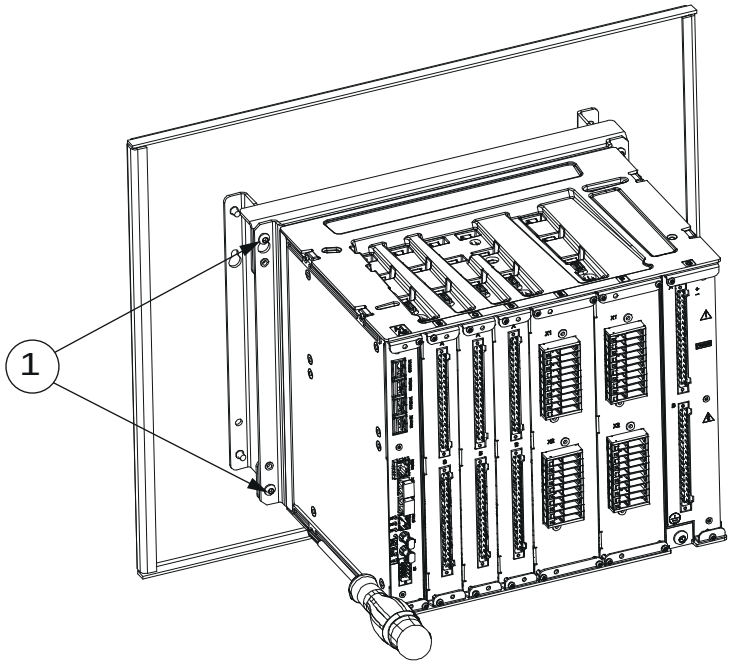

1 M5 screws

Figure 35: Mounting and tightening the M5 screws

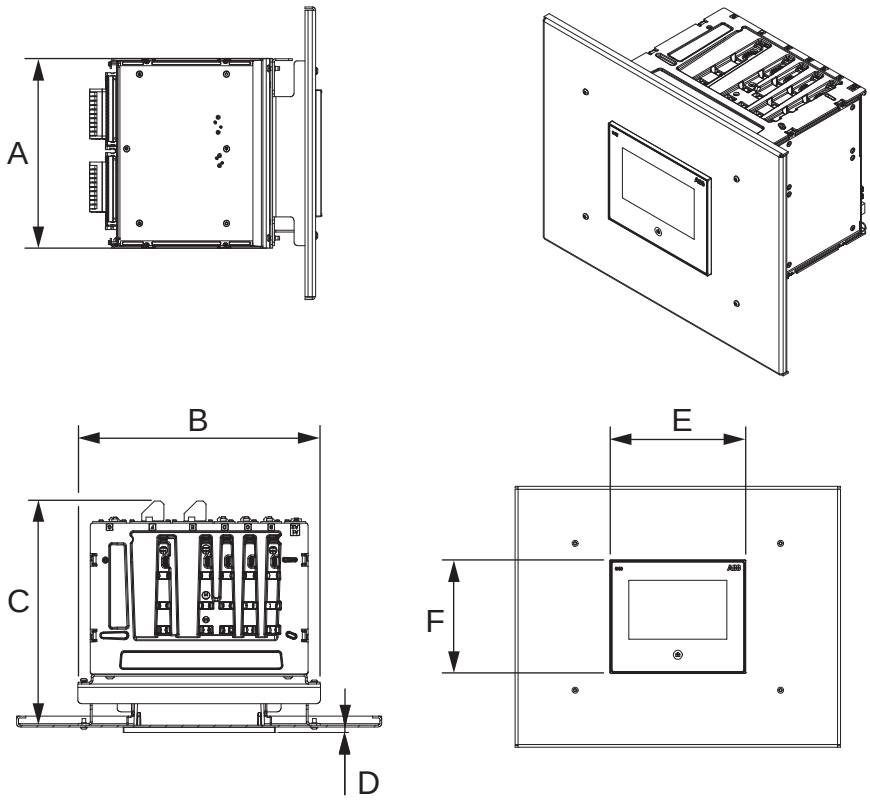

A	265.0 mm (10.4331 in)	D	7.6 mm (0.2992 in)
B	339.0 mm (13.3465 in)	E	212.5 mm (8.3661 in)
C	313.2 mm (12.3307 in) with compression type CT/VT connectors 325.1 mm (12.7992 in) with ring-lug type CT/VT connectors 345.0 mm (13.5827 in) with a grounding bar	F	177.5 mm (6.9882 in)

Figure 36: Door mounted protection relay with local HMI

4.3.3.3 Rack mounting protection relay with local HMI

1. Mount the LHMI and the mounting bracket to the rack plate.
   a) Attach the 7U rack plate to the rack frame.
   b) Mount the LHMI with its own installation brackets to the LHMI cutout.
   c) Mount the mounting bracket to the 7U rack plate with M5 screws.
   d) Tighten the M5 screws to 4 Nm ±5% (2.9502 ft-lb ±5%).
   e) Mount the M5 screws in the upper holes of the mounting bracket, but do not tighten them. Leave them 3...4 mm (0.1181...0.1575 in) open.

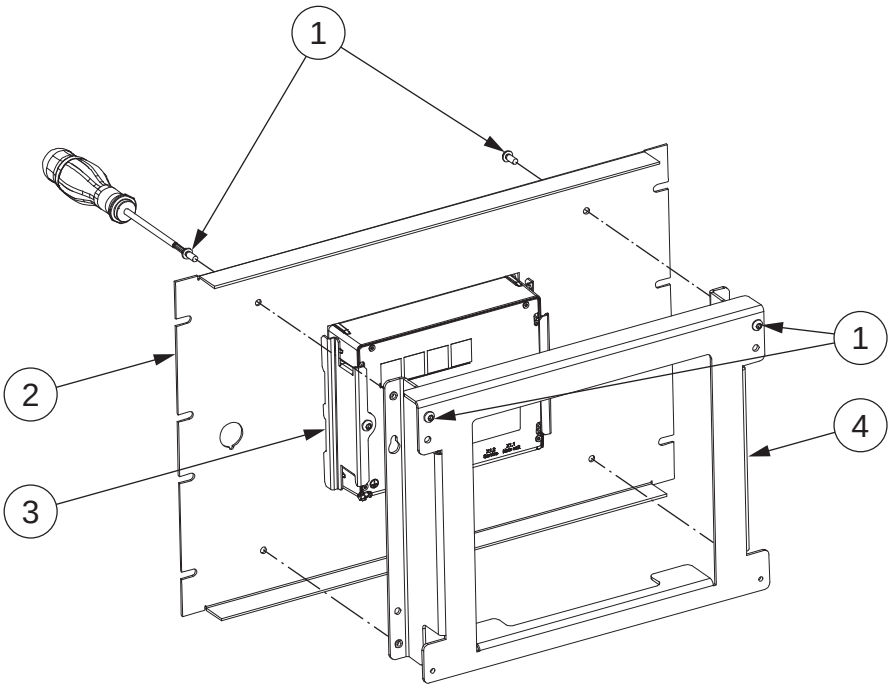

1 M5 screws
2 7U rack plate
3 LHMI installation brackets
4 Mounting bracket

Figure 37: Mounting the local HMI and mounting bracket

2. Install the RJ-45 coupler with a cable to the panel cutout and connect the cable to the LHMI service port X1.2.

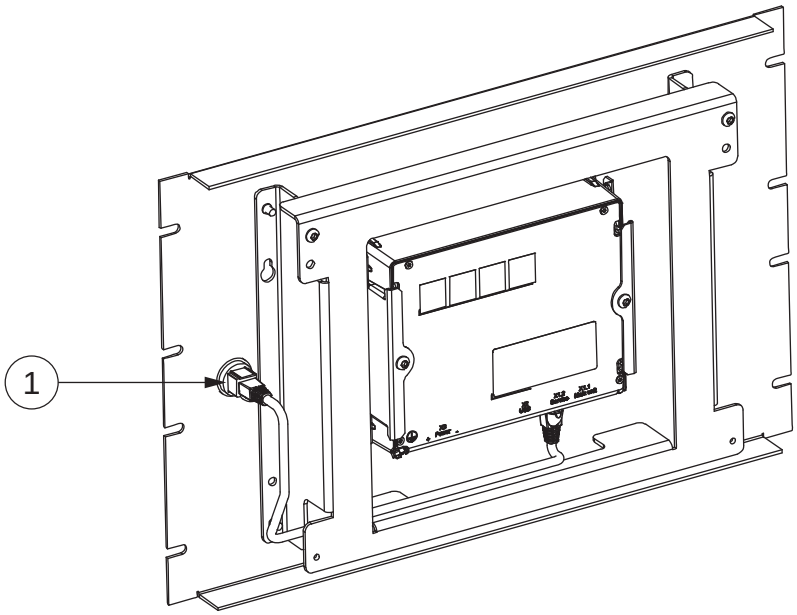

1 RJ-45 coupler

Figure 38: Installing the RJ-45 coupler

3. Attach the mounting bracket to the protection relay with M6 screws.

4. Tighten the M6 screws to 9 Nm ±5% (6.6381 ft-lb ±5%).

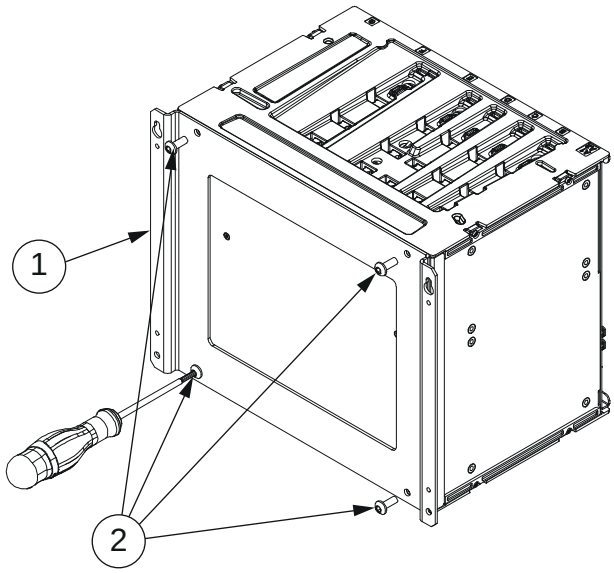

1 Mounting bracket 2 M6 screws

Figure 39: Mounting M6 screws

5. Lift the protection relay to its place on the existing screws on the mounting bracket.
6. Mount the M5 screws in the bottom holes.
7. Tighten the four M5 screws on the mounting bracket to 4 Nm ±5% (2.9502 ftlb ±5%).

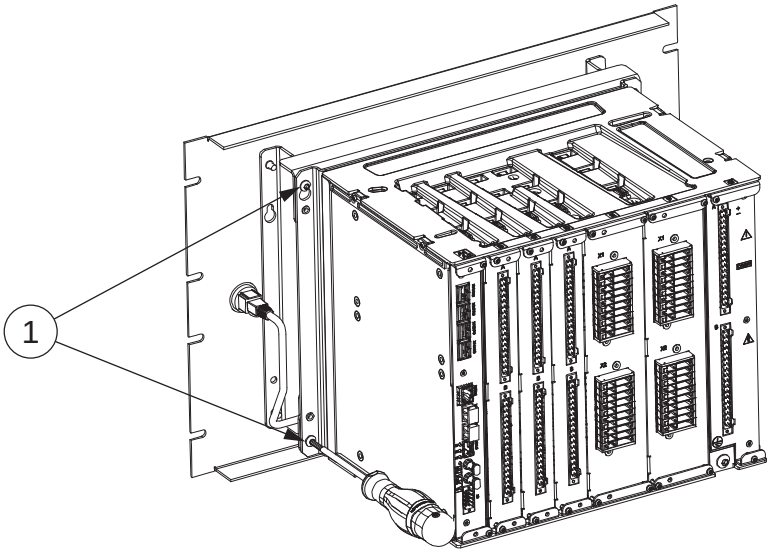

1 M5 screws

Figure 40: Mounting and tightening the M5 screws

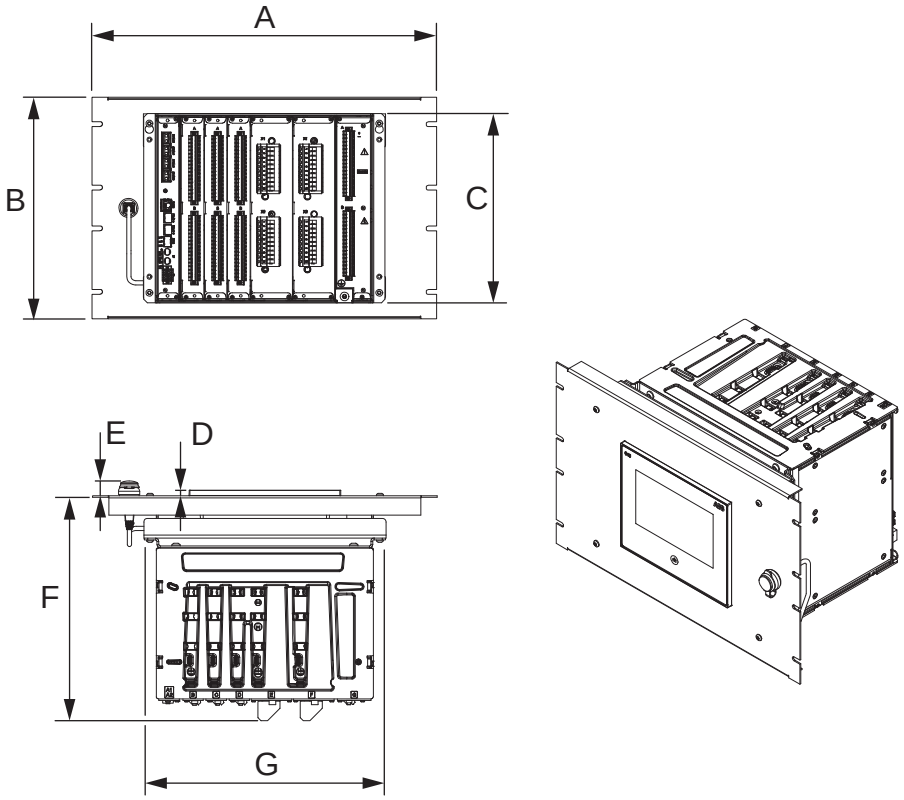

A	482.6 mm (19 in)	E	19 mm (0.7480 in)
B	310.35 mm (12.2185 in), 7U	F	313.2 mm (12.3307 in) with compression type CT/VT connectors 325.1 mm (12.7992 in) with ring-lug type CT/VT connectors 345.0 mm (13.5827 in) with a grounding bar
C	265.0 mm (10.4331 in)	G	339 mm (13.3465 in)
D	7.6 mm (0.2992 in)		

Figure 41: Rack mounted protection relay with local HMI

4.3.4 Mounting grounding bar kit

1. Detach the module from the protection relay.

2. Place the grounding bar between the front plates' bendings and mount it to the front plate with M3 screws and washers.

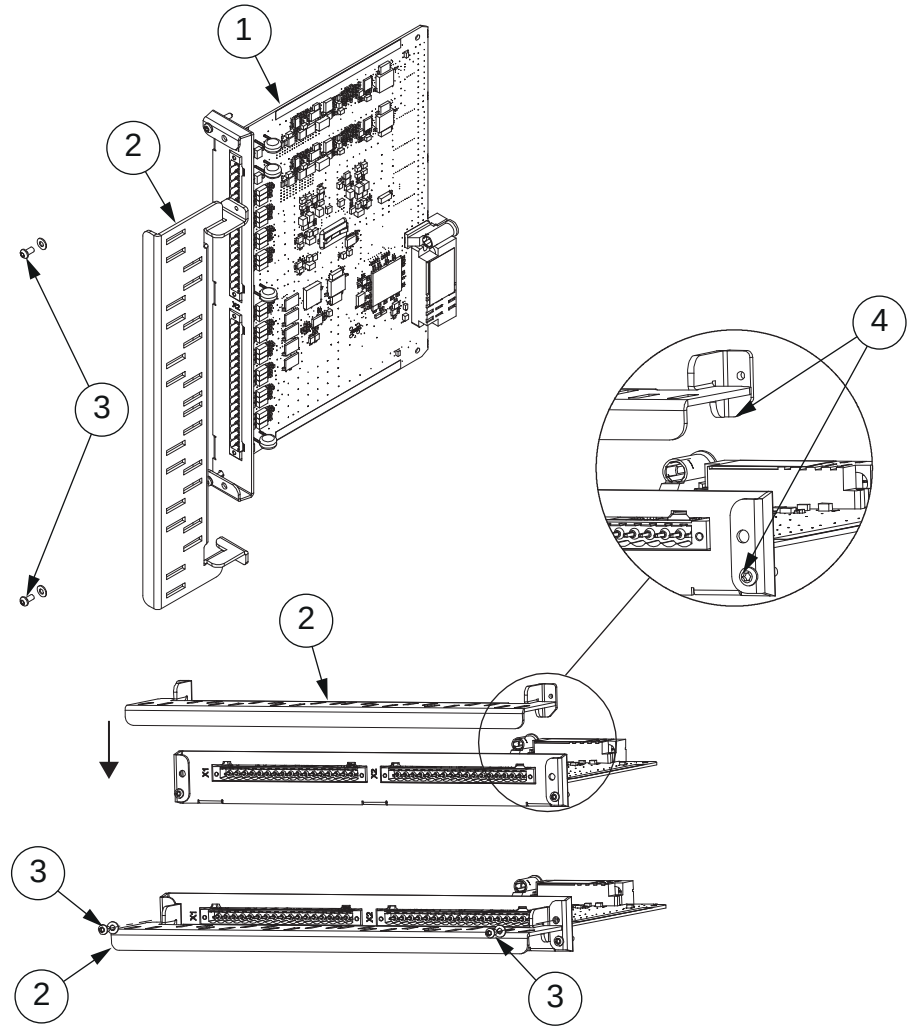

1	Module	3	M3 screws and washers
2	Grounding bar	4	Edge with chamfer towards the module's collar screw

Figure 42: Mounting grounding bar

3. Tighten the M3 screws to 0.8 Nm ±5% (0.5900 ft-lb ±5%).

4. Install the module back to the same slot in the protection relay.

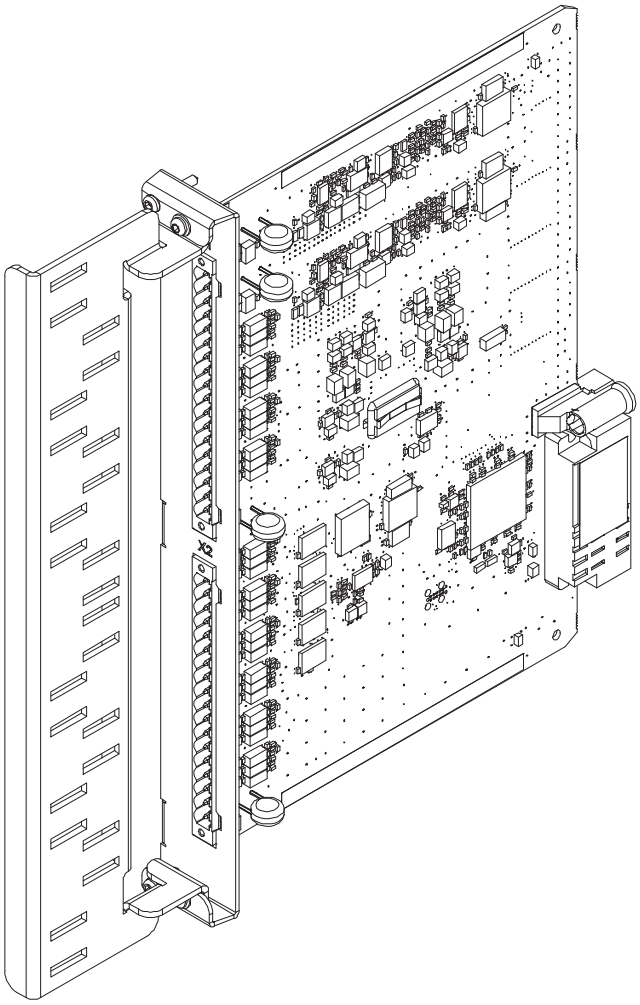

Figure 43: Installing the module

5. Install connectors with cables to the module.

Use peeled cables to get contact to the grounding bar.

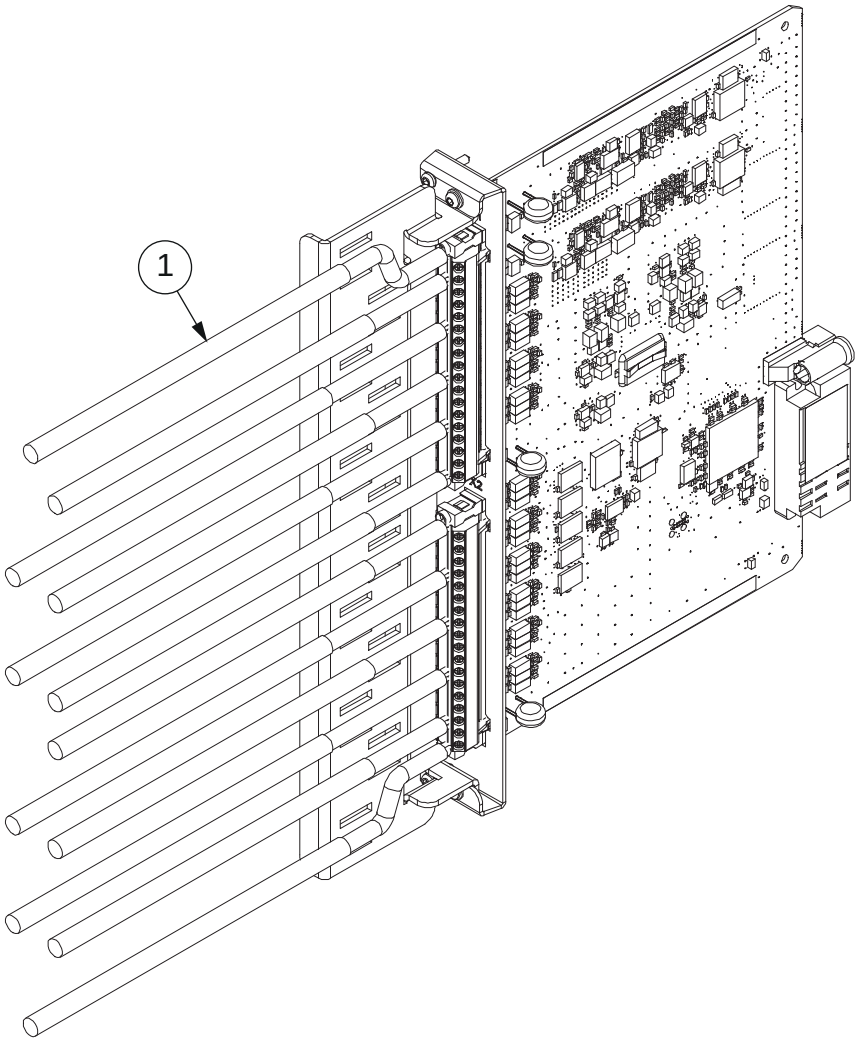

Figure 44: Installing connectors

6. Install shield clamps to connect the cable sheathing to the grounding bar.

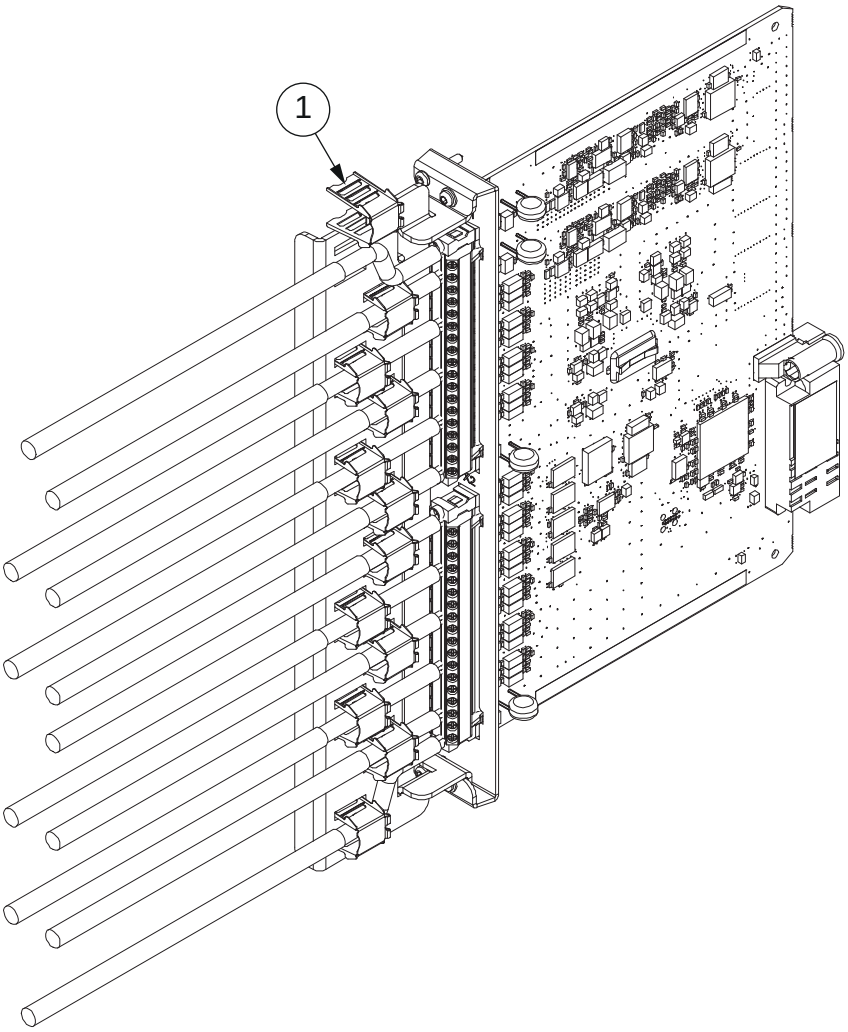

1 Shield clamp

Figure 45: Installing shield clamps

See also *Chapter 5.4.2.1 Shielding RTD/mA instrument cables*.

4.3.5 Mounting lens sensors for an arc protection system

Arc protection is used to detect arc situations in air-insulated metal-clad switchgear.

1. Drill a Ø 10 mm (0.3937 in) hole in the wall of the supervised space.

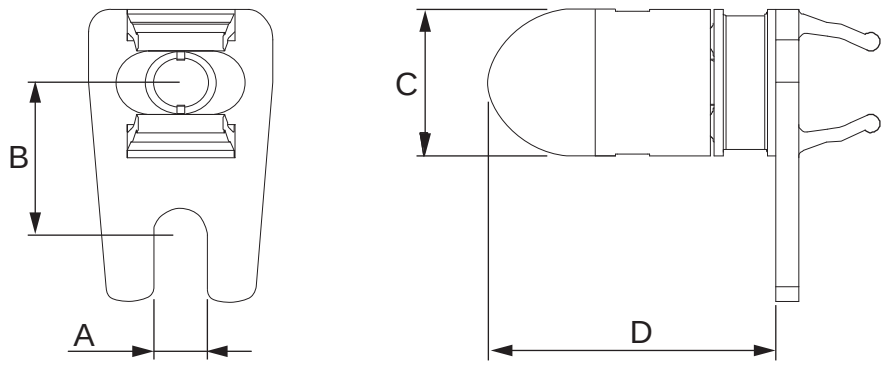

A	3.5 mm (0.1378 in)	C	Ø 9.5 mm (0.3740 in)
B	10 mm (0.3937 in)	D	19 mm (0.7480 in)

Figure 46: Dimensions of the lens sensor

2. Fit the lens sensor into the hole and fasten it with a self-tapping M3 screw.

   Alternatively, the lens sensor can be fastened with a cable tie. To do this, secure the cable tie to a suitable point of attachment on the cubicle wall and wrap the cable tie tightly around the sensor.

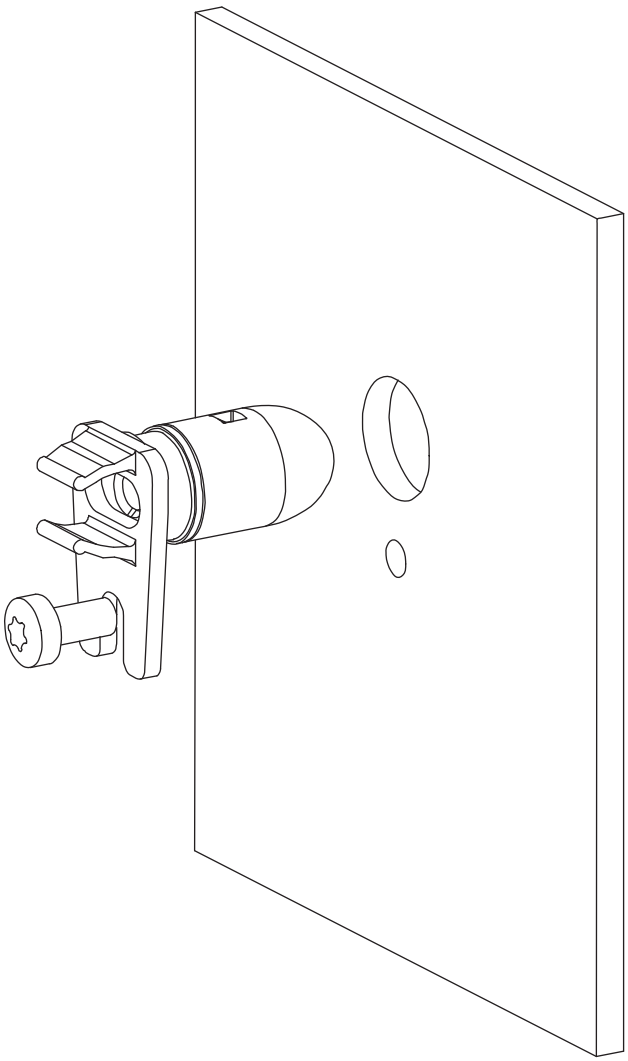

Figure 47: Mounting the lens sensor

3. Make sure that the cable tie lies in the groove of the sensor to prevent it from blocking the light.

4.3.6 Manufacturing tailored length loop sensor for an arc protection system

These instructions are for manufacturing tailored length arc loop sensors using

1. 400 µm V-System® Termination Kit **DT03732-34** by OFS Fitel, LLC to be purchased from local distributor, not in ABB's offering.
2. Bulk glass core arc sensor fiber, offered in REA accessories as three alternative lengths:
   - 1MSC 380018.100 ARC sensor fiber, delivery length 100 m
   - 1MSC 380018.300 ARC sensor fiber, delivery length 300 m
   - 1MSC 380018.500 ARC sensor fiber, delivery length 500 m
3. Connector items, offered in REX640 accessories as:
   - 2RCA056821 ARC fiber spacer sleeve, 25 pcs
   - SJG BP05226-02 ARC sensor fiber V-pin connector, 25 pcs

Two spacer sleeves and two V-pin connectors are needed per each arc loop sensor.

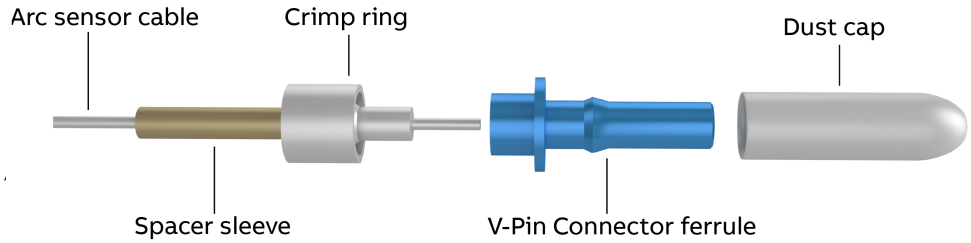

Figure 48: Arc loop sensor parts

Figure 49: Contents of the termination tool kit

Cable Stripper tool is not needed as the naked fiber 1MSC 380018.x00 has no jacket to be stripped.

Step by step procedure:

1. Cut with scissors required length of the fiber, note that allowed maximum arc loop sensor length with REX640 is 60 meters.
2. Install spacer sleeve and then crimp ring.

Figure 50: Spacer sleeve

Figure 51: Crimp ring

a) Spacer sleeves are used to increase the unjacketed fiber diameter to fit the size of crimp ring.
b) Feed fiber through spacer sleeve and crimp ring, large diameter first. Slide the spacer along the fiber until it is 63 mm (2½ inch) from the end of the fiber. Bottom out the crimp ring on the spacer sleeve using a clockwise turning motion (i.e. screw the crimp ring onto the spacer if necessary).

Figure 52: Attaching the crimp ring to the spacer sleeve

c) Holding cable, crimp ring and spacer in left hand and crimp tool in right, insert small end of crimp ring completely into the front die nest of the crimp tool.

Figure 53: Using the crimp tool

d) Squeeze crimp tool handles together until it clicks, then releases.

3. Strip Fiber Buffer

Make sure to use the appropriate strip tool insert for the buffer removal process: ROYAL BLUE.

Be careful while handling the FIBER STRIPPER. Handle as a precision device and do not strike on hard surfaces or drop.

Be sure to clean blades frequently using small bristle brush supplied.

IMPORTANT: Pull straight when stripping the fiber buffer. The HCS fiber cladding can be damaged if fiber is not pulled straight.

a) Insert the fiber through the guide tube of the fiber stripper until the cable spacer sleeve bottoms out in the tube.

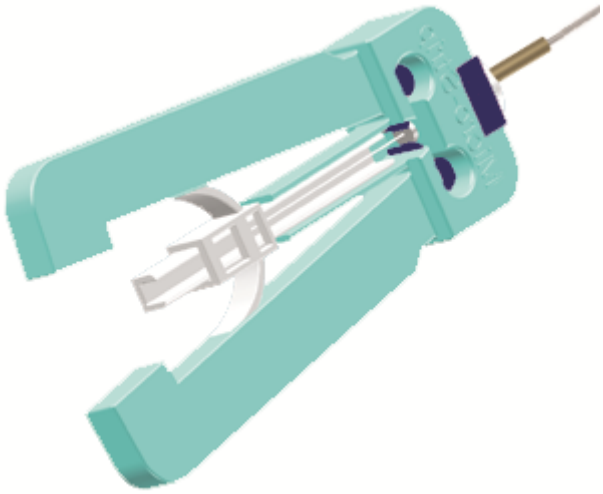

Figure 54: Using fiber stripper

b) Holding cable securely, squeeze handles to cut buffer and PULL straight to remove buffer.

c) Release the buffer strip tool handles.
d) Inspect HCS cladding for damage from improper buffer stripping (i.e. white dusty stripes).

Figure 55: Correct HCS cladding

If unable to insert buffered fiber through guide tube, trim tip of the fiber using scissors.

Be careful not to touch the HCS fiber coating with bare fingers. Use of disposable nitrile powder free examination gloves is recommended. Once the fiber has been stripped, the coating will retain finger oils, which can transfer to and damage gripper pads in the cleaver during the last step 4 in the termination process.

If damage is visible, cut off the damaged fiber and repeat the procedure from step 2 with a new spacer and crimp ring.

4. Install V-Pin Connector ferrule.

a) Slide the ferrule onto the fiber, large diameter first, and push completely into the outer flange of the crimp ring.

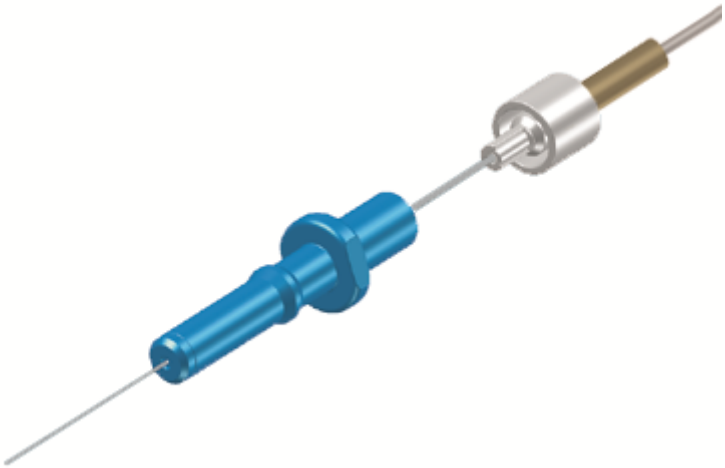

Figure 56: Sliding the ferrule onto the fiber

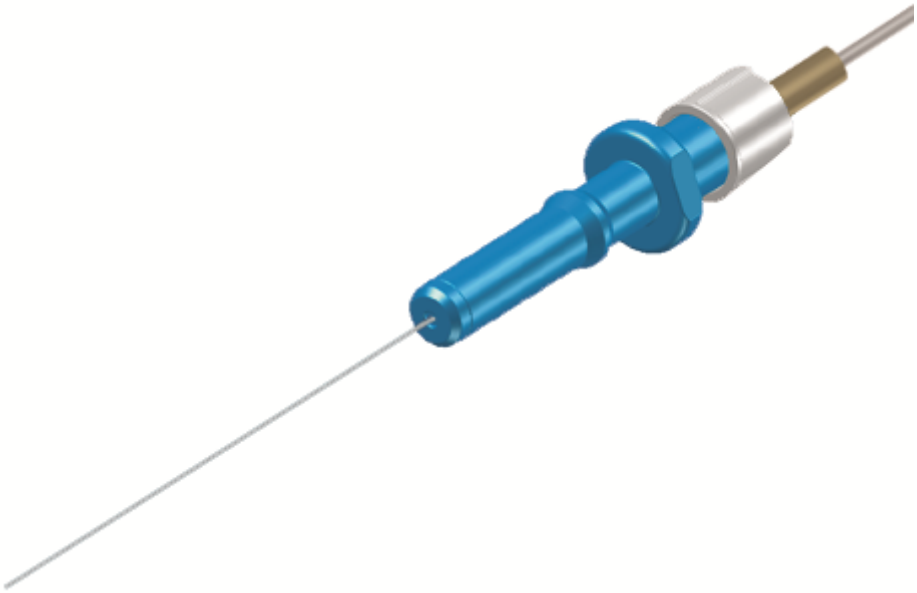

Figure 57: Ferrule in place

b) Insert the crimp ring completely into the rear die nest of the crimp tool. Be sure the ferrule flange is flush against the edge of the die nest.

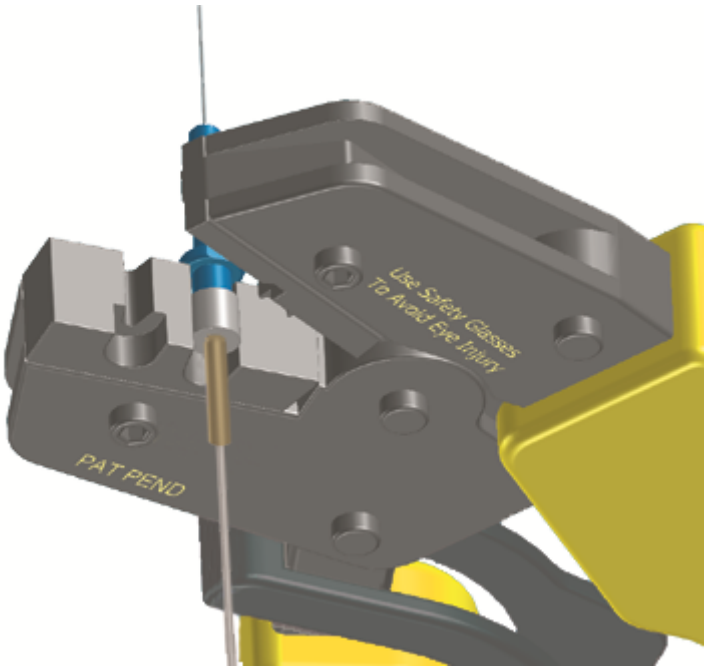

Figure 58: Inserting the crimp ring into the crimp tool

c) Squeeze crimp tool handles together until it clicks, then releases.

Be careful not to touch the HCS fiber coating. Once the fiber has been stripped, the coating will retain finger oils, which can transfer to and damage gripper pads in the cleaver.

5. Cleave Fiber.

Make sure the appropriate cleave tool positioner plate is being used: V-Pin.

Make sure the appropriate colored tension spring is being used: Black.

Careful while handling the Cleave Tool. Handle as a precision device and do not strike on hard surfaces or drop.

Keep the cleave tool clean and free from oils, including naturally occurring finger oils. Gripper pads, diamond blade and anvil should be cleaned after every 50 cleaves. Use the OFS Cleave Tool Cleaning Kit — Part #P16247, available separately.

Do not use alcohol to clean the diamond blade or the gripper pads. Alcohol will chemically react with the gripper pads and ruin them.

Do not insert metal tools near the diamond blade, as it is fragile and may chip.

a) Holding the cleave tool in a horizontal position, grip the handle while leaving your index finger free to actuate trigger.

b) Place the ferrule into the hole of the positioner plate until it is fully inserted.

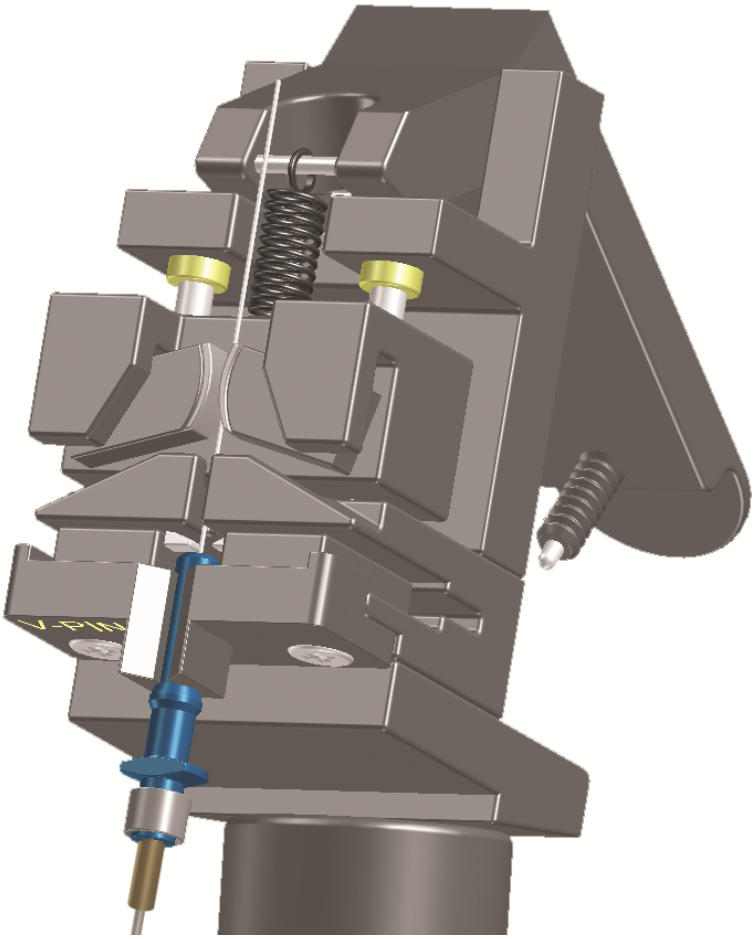

Figure 59: Placing the ferrule into the cleave tool

It is critical to fully insert the connector into the positioner plate. Failure to do so, may cause poor cleave quality and/or damage to the diamond blade.

Do not hold onto the connector during the cleave process. Doing so may cause poor cleave quality.

Always follow termination kit manufacturers recommendation for cleave tool service and maintenance.

c) Release the connector in the tool.

d) Using index finger, slowly and gently depress trigger to perform the cleave process. The cleave process is complete when the fiber snaps away from the connector. Do not release the trigger!

e) Before releasing the trigger, remove the connector from the cleave tool and grasp the top of the scrap fiber while releasing the trigger. Gently remove the scrap fiber while keeping it away from the diamond blade.
f) Dispose of scrap fiber safely in a hard-sided container.

6. Repeat these procedure steps 2-5 to the other end of the arc sensor fiber and then the arc loop sensor is ready.

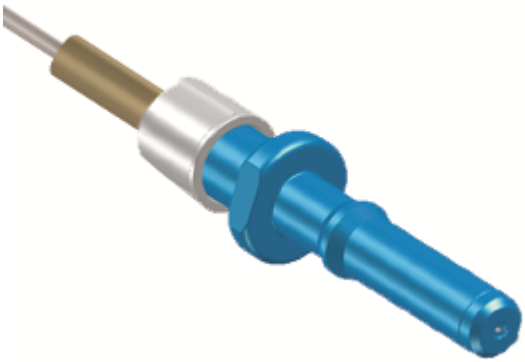

Figure 60: Finished termination of arc loop sensor

a) Cover ready connectors in both ends with dust caps.

4.3.7 Mounting RJ-45 coupler for an HMI service port

1. Make a cutout for the RJ-45 coupler according to the dimensional drawing.

A	Ø 22.5 mm (0.8858 in)	D	R 1.85 mm (0.0728 in)
B	Ø 45 mm (1.7717 in)	1	Free space behind the panel
C	11.9 mm (0.4685 in)		

Figure 61: RJ–45 connector panel cutout

2. Install the RJ-45 coupler with a cable to the panel cutout and connect the cable to the HMI service port X1.2.

4.3.8 Arranging ventilation

- Reserve sufficient space round the protection relay to ensure adequate ventilation.

5 Connecting

5.1 Required tools

Table 3: Tools for connector installation

Connector type	Tool for anchoring connector		Tool for connecting wire
	Slotted head (DIN 5264) (mm)	ISO 8764/2	Slotted head (DIN 5364) (mm)
CT/VT connectors			
Compression	0.6x3.5	–	0.6x3.5
Ring lug	1.0x4	–	1.0x4
Signal connectors			
Compression	–	PH 0, PZ 0	0.6x3.5
Ring lug	–	PH 2	0.5x3
Push-in	0.6x3.5	–	0.6x3.5
IRIG-B connector			
IRIG-B	0.4x2.5	–	0.4x2.5

5.2 Connecting wires

All connections are made on the front of the case. No soldering is needed.

1. Connect signal connector terminals.
2. Connect compression type (X1 and X2) terminals for CTs/VTs.
3. Connect the terminals on the communication module for IRIG-B.
4. Connect the RTD inputs and mA outputs using shielded stranded cables and connect the cable shield to GND rail.
5. Connect all the sensors of the same type to adjacent channels.

The cable shield is to be earthed at only one end of the cable with RTD cable shield rail.

Use fine wire in door mounting.

See the technical manual for product-specific terminal diagrams.

5.2.1 Connecting wires to screw-compression type connectors

Terminal blocks of screw-compression type are used for electrical connections.

1. Open the screw terminal before inserting a wire into it for the first time. To open the screw terminal, turn the fixing screw anti-clockwise until the terminal hole is wide open (the inside of the terminal hole is surrounded by metal).
2. Insert the wire and turn the fixing screw clockwise until the wire is firmly fixed.

Table 4: Wire specifications for screw-compression type connectors

Connector type	Wire size		Stripping length	Contact screw tightening torque	Connector fixing screw tightening torque
	Stranded	Crimp ferrule			
CT/VT connectors	0.14...6 mm² (AWG 26-10)	0.25...4 mm² (AWG 24-12) [1]	9 mm (0.3543 in)	0.6. 0.8 Nm (0.4425...0.5900 ft-lb)	1.2 Nm (0.8851 ft-lb)
Signal connector	0.2...4 mm² (AWG 24-12)	0.2. 2.5 mm² (AWG 24-14) [2]	7 mm (0.2756 in)	0.4. 0.5 Nm (0.2950...0.3688 ft-lb)	0.2 Nm (0.1475 ft-lb)
Serial EIA-485 /IRIG-B connector	0.2. 1.0 mm² (AWG 24-17)	0.13...0.34 mm² (AWG 26-22)	7...8 mm (0.2756...0.3150 in)	-	0.2 Nm (0.1475 ft-lb)

5.2.2 Connecting wires to ring-lug type connectors

Terminal blocks of ring-lug type are used for electrical connections.

1. Connect a suitable ring lug to the cable.
2. Remove the contact screws from the connector, thread the ring-lug cable lug to the terminal screw and tighten the screw.

[1] In case of insulated crimp ferrules, TWIN ferrules need to be used with daisy chain requirement 2 × 2.5 mm² (AWG 14), two conductors without crimp ferrule with the same cross section 0.14...1.5 mm² (AWG 26-16)

[2] For two wires 2 × 0.2...1.5 mm² (AWG 24-16)

Table 5: Wire specifications for ring-lug type connectors

Connector type	Wire size		Ring-lug type	Contact screw tightening torque	Connector fixing screw tightening torque
	Stranded	Crimp ferrule			
CT/VT connectors	2.62…6.64 mm² (AWG 12-10)	-	TE ring lug TE-35787 [1]	1.2. 1.5 Nm (0.8851… 1.1063 ft-lb)	1.2 Nm (0.8851 ft-lb)
Signal connectors	1.25…2 mm² (AWG 16-14)	-	TE ring lug TE-320561 [1]	1.13 Nm (0.8334 ft-lb)	0.35 Nm (0.2581 ft-lb)

5.2.3 Connecting wires to push-in type connectors

Terminal blocks of push-in type are used for electrical connections.

1. Connect the wire in one of the alternative ways.
   - When using stranded wire without ferrule, push the connector's release button while inserting the wire.
   - When using wire with end ferrule, insert the wire without pushing the release button.

Table 6: Wire specifications for push-in type connectors

Connector type	Wire size		Stripping length	Contact screw tightening torque	Connector fixing screw tightening torque
	Stranded	Crimp ferrule			
Signal connectors	0.2...2.5 mm² (AWG 24-14)	0.2. 2.5 mm² (AWG 24-14)	10 mm (0.3937 in)	-	0.2 Nm (0.1475 ft-lb)

[1] Use the TE crimping tool TE-58433-3

5.3 Connecting protective earthing

5.3.1 Connecting protective earthing to relay

Connect the protection relay to earth using a 6 mm^2 (AWG 10) flat braided copper cable. Use an earth lead of maximum 1.5 m (4.9 ft). Extra length is required for door mounting.

A 16 mm^2 (AWG 6) flat braided copper cable is recommended for more demanding EMI environments, such as installations where the relay is mounted inside a gas insulated switchgear.

1. Using a TX30 screwdriver, loosen the protective earth screw to connect a separate earth protection lead.

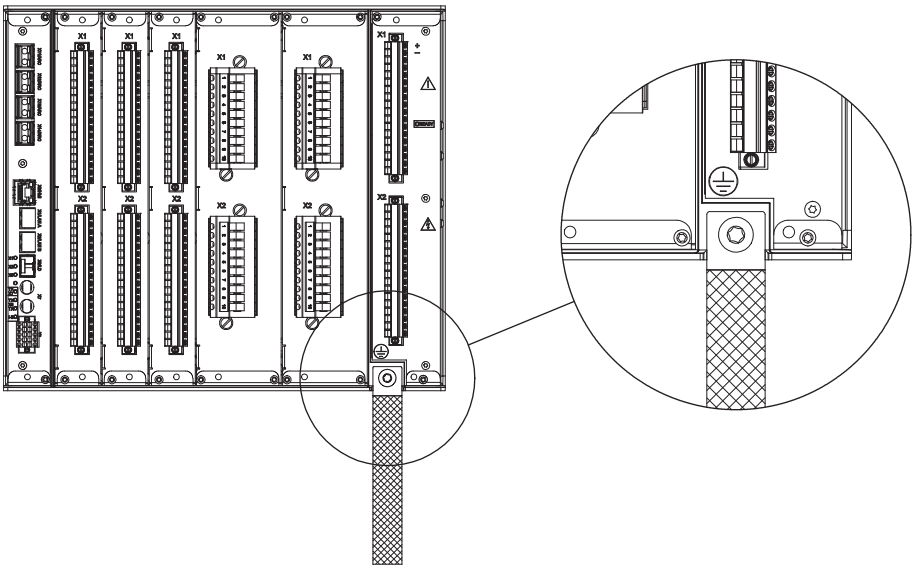

Figure 62: Location of the protective earth pin

Each protection relay must have its own earth lead connected to the earth circuit connector.

2. Connect the earth lead to the earth bar.
3. Thread the copper cable on the protective earth.
4. Tighten the protective earth screw to 6 Nm ±5% (4.4254 ft-lb ±5%).
5. Support the earth lead so that it cannot break or weaken.

   Observe the mechanical, chemical or electrochemical conditions.

5.3.2 Connecting protective earthing to local HMI

Connect the LHMI to earth using an earth lead of at least 6.0 mm^2 (AWG 10).

1. Loosen the protective earth screw T20 on the LHMI to connect a separate earth protection lead.

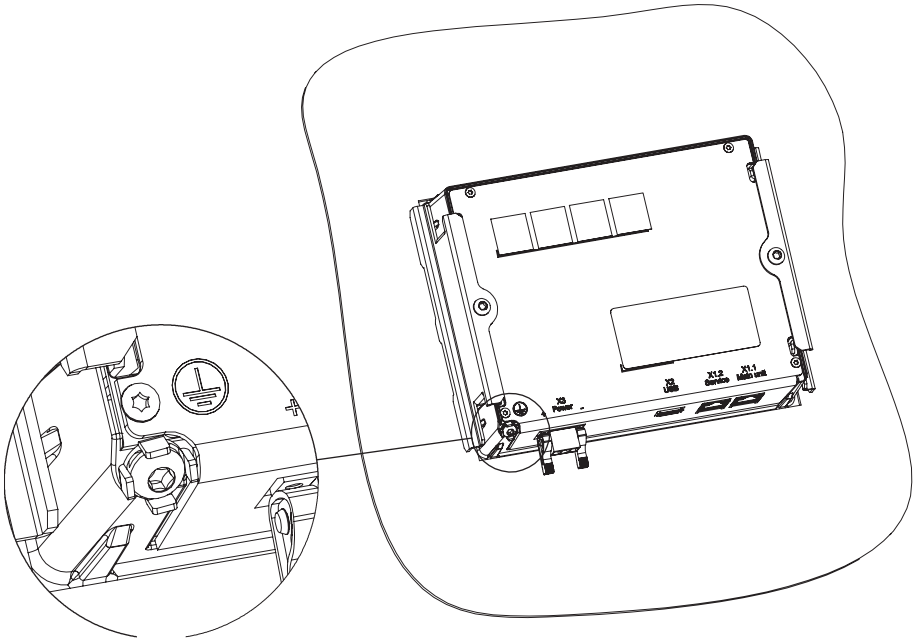

Figure 63: Loosening protective earth screw T20

2. Tighten the protective earth screw to 1.5 Nm ±10% (1.1063 ft-lb ±10%).

5.4 Connecting analog signals

A connection diagram is needed to connect the analog signals.

- Use the compression type for CT/VT terminals. The wires for the analog signals can be connected to the CT/VT terminals before the connector is connected to the protection relay. The connector features an automatic short circuit mechanism for the current terminals. Therefore, detaching the connector from the unit does not open the secondary circuit of the CT which otherwise could cause dangerously high voltages. To avoid a mismatch between CT and VT connections, the connectors are color coded. The light gray pairs with short circuit facility are intended for CTs while the dark gray pairs without short circuit facility are for VTs. The counterpart connectors on the module have the same color coding.

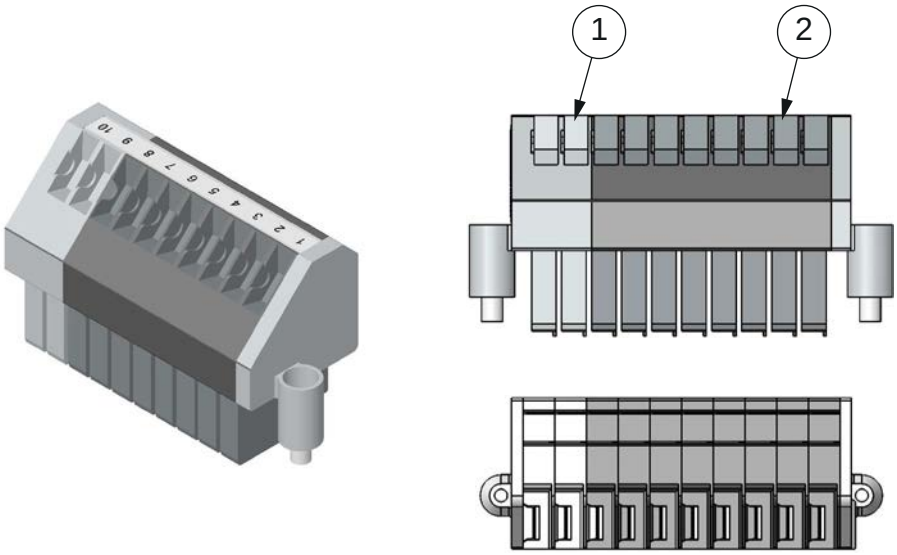

1 Light gray pairs with short circuit facility (CT), RAL7035

2 Dark gray pairs without short circuit facility (VT), RAL7042

Figure 64: Identifying CT/VT color coding

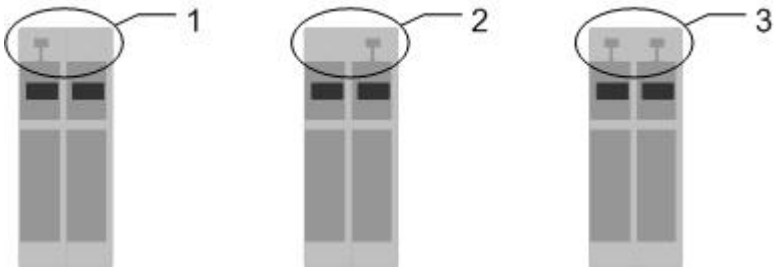

1 CT connector coding

2 VT connector coding

3 Empty connector

Figure 65: Loose CT/VT connector coding

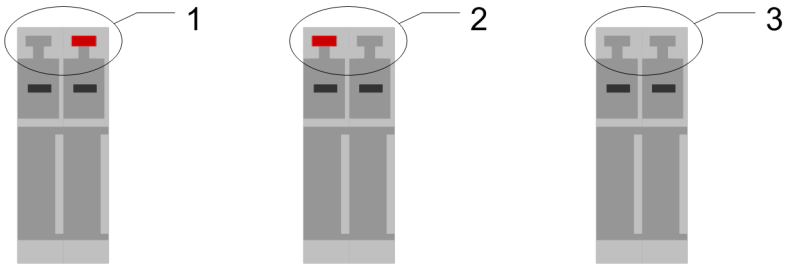

1 CT connector coding

2 VT connector coding

3 Empty connector

Figure 66: Fixed CT/VT connector coding

5.4.1 Connecting current and voltage inputs

Conventional instrument transformers

Each terminal for CTs/VTs is dimensioned for one 0.5...6.0 mm^2 (AWG 20-10) wire or for two wires of maximum 2.5 mm^2 (AWG 14).

- Connect the wires from the CTs/VTs to the correct device according to the phase order and the connection diagram.

Sensors (non-conventional instrument transformers)

Current measurement is based on Rogowski coil and voltage measurement is based on voltage divider. Both current and voltage measurements interface the relay via one RJ45 connector per phase. There are two different sensor input modules available, supporting different IEC standards and having different RJ45 connector pin lay-out.

- SIM1901 supporting IEC 60044
- SIM1902 supporting IEC 61869

There are a number of sensor interface adapters available which can be used to connect the sensors to the relay, supporting different scenarios both in green field and retrofit cases. More information can be found in *Sensor accessories*.

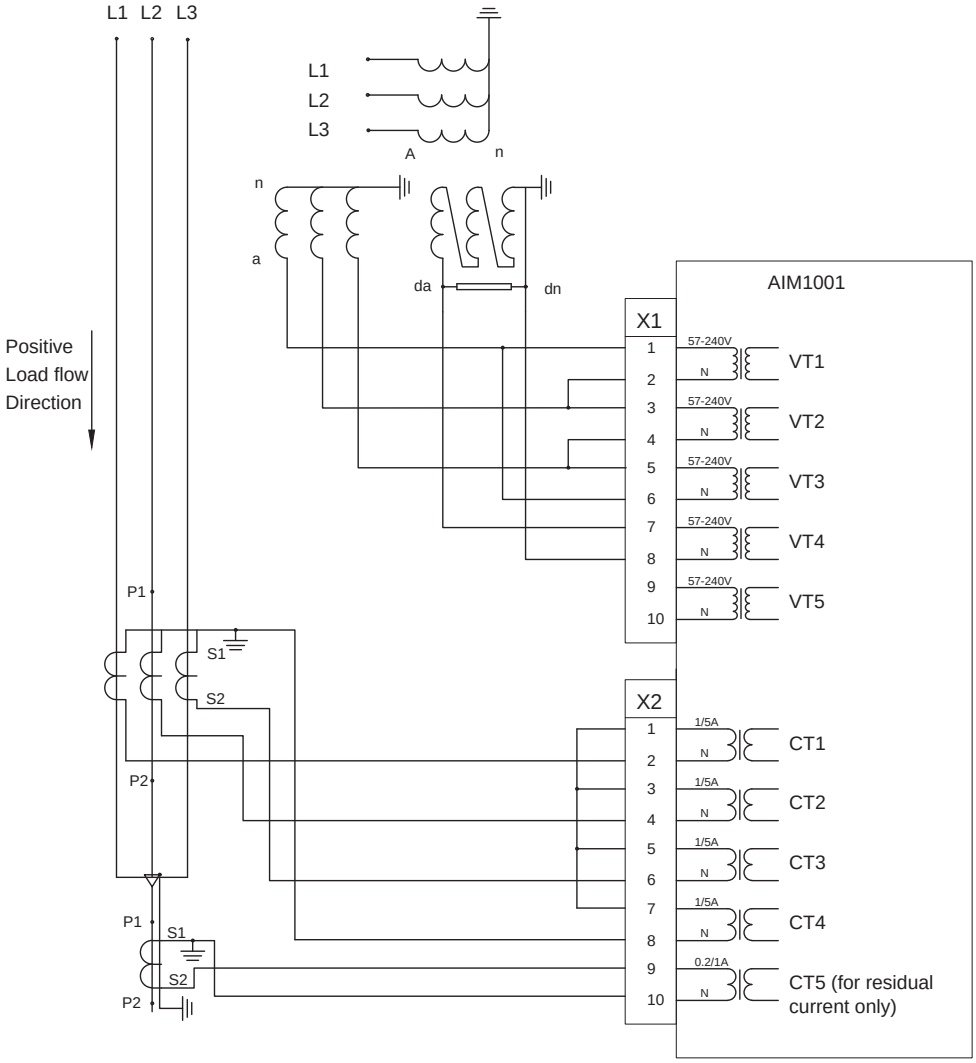

Figure 67: AIM1001 module

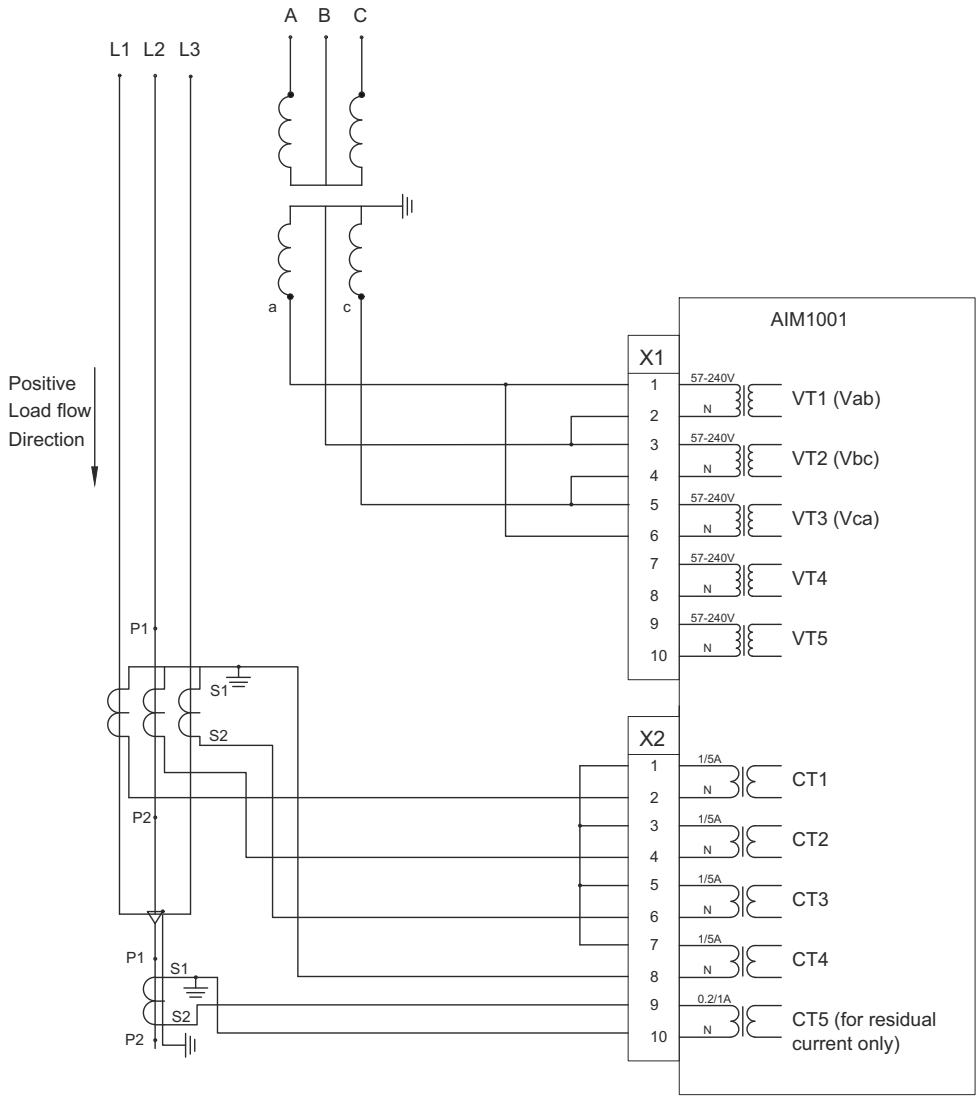

Figure 68: AIM1001 module (two phase-to-phase VTs)

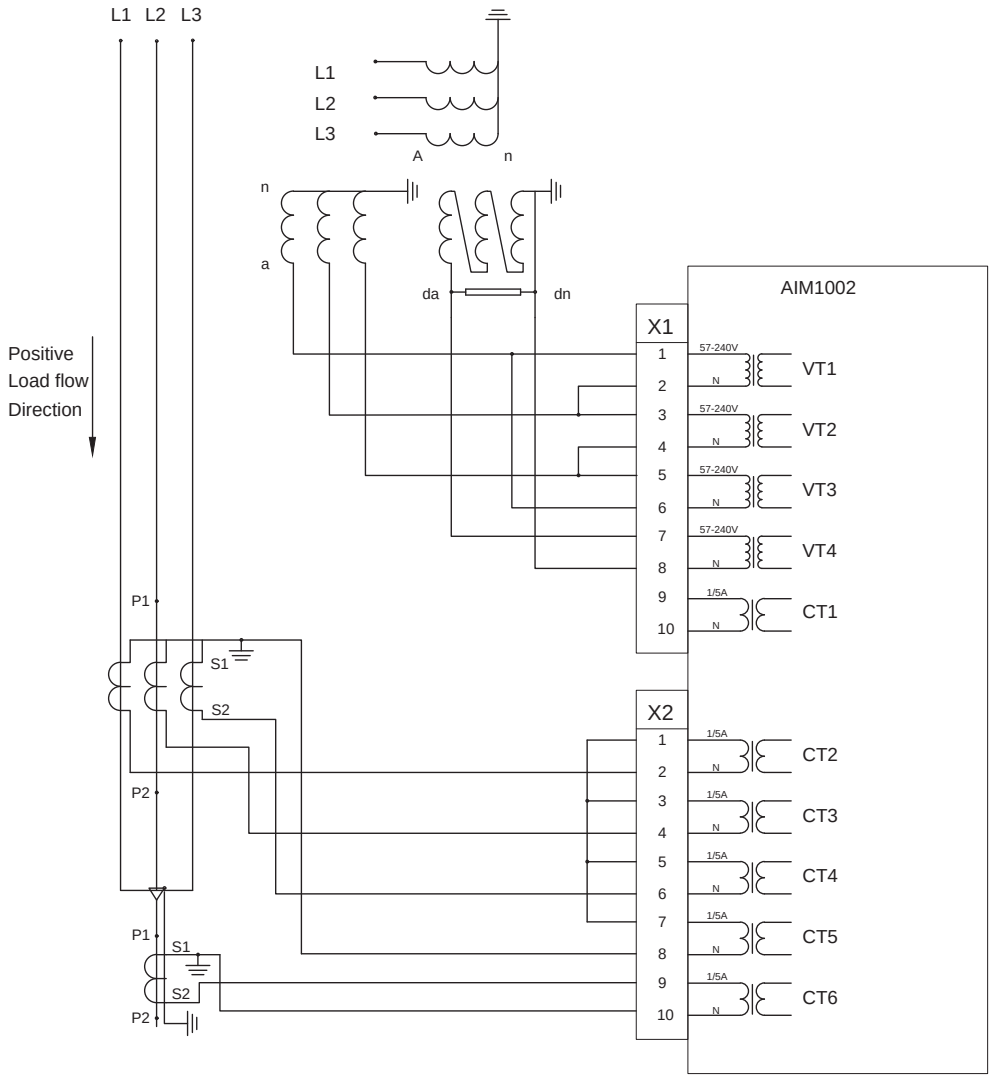

Figure 69: AIM1002 module

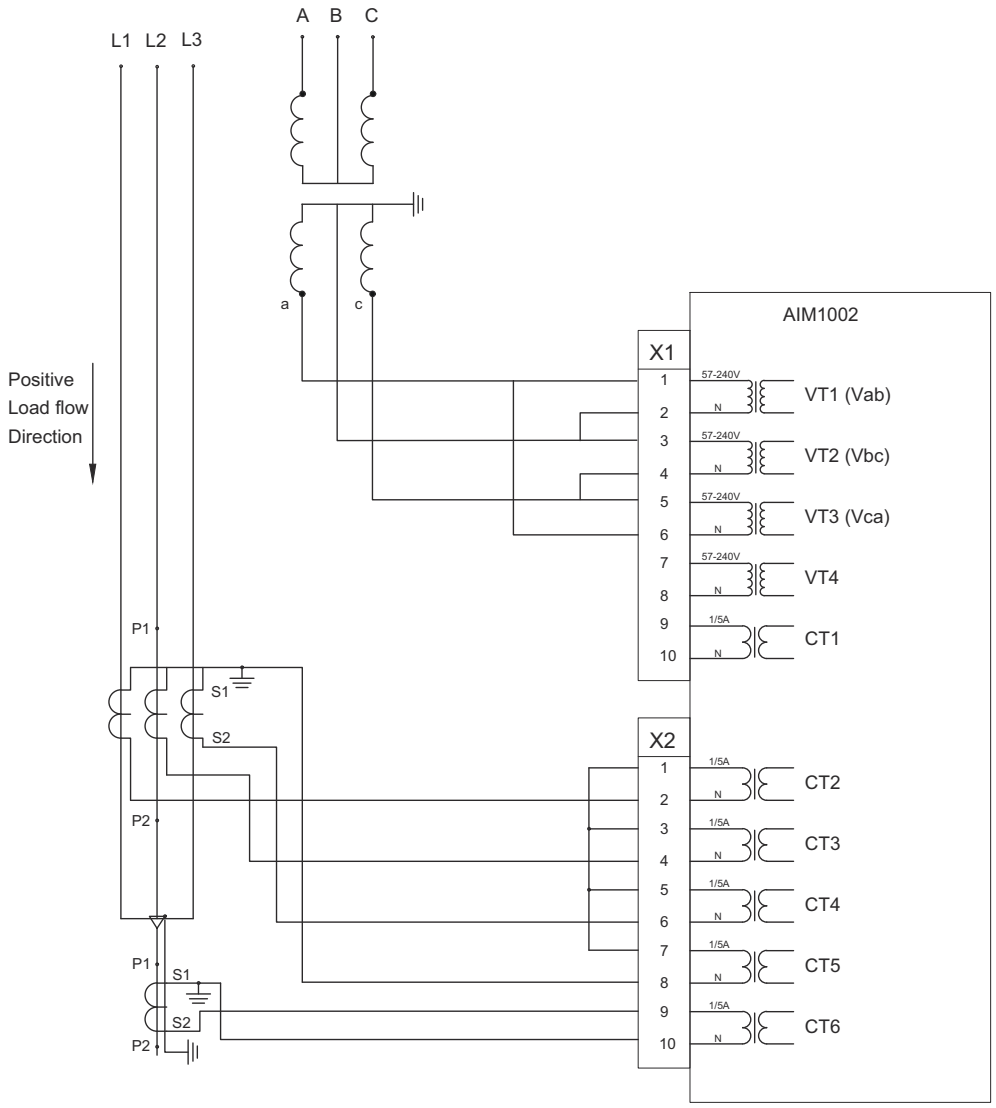

Figure 70: AIM1002 module (two phase-to-phase VTs)

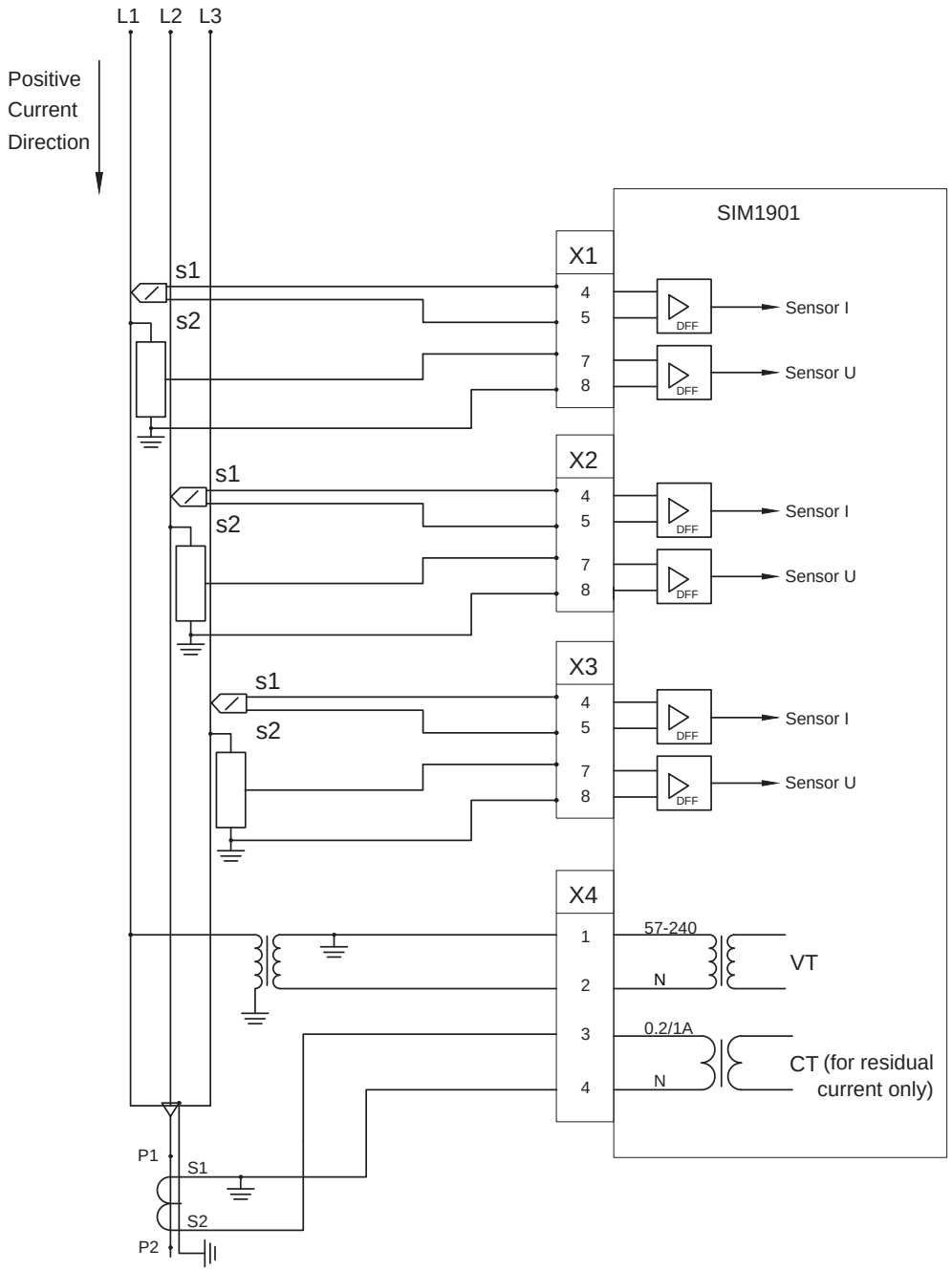

Figure 71: SIM1901 module (VT primary connection phase-to-earth)

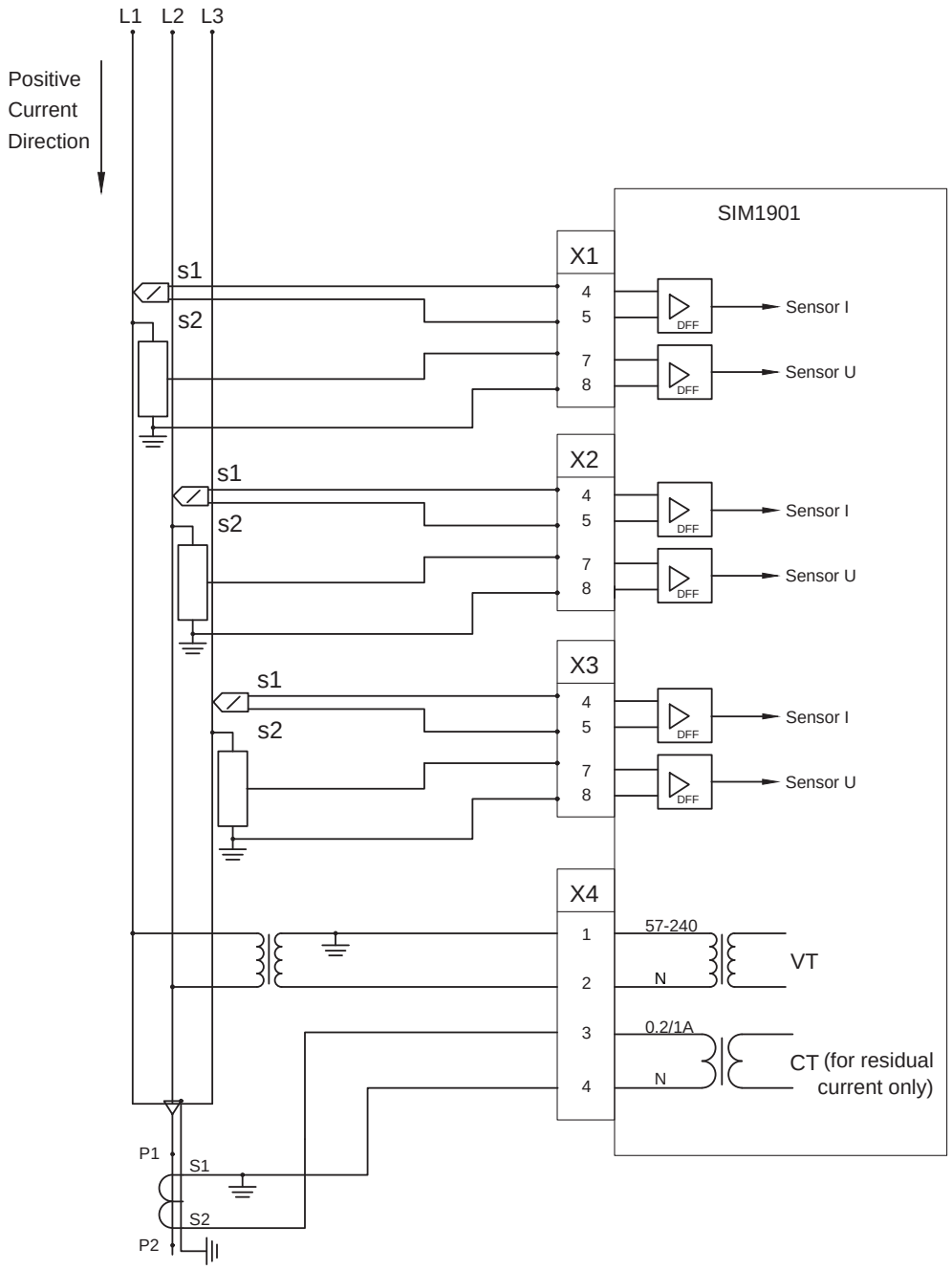

Figure 72: SIM1901 module (VT primary connection phase-to-phase)

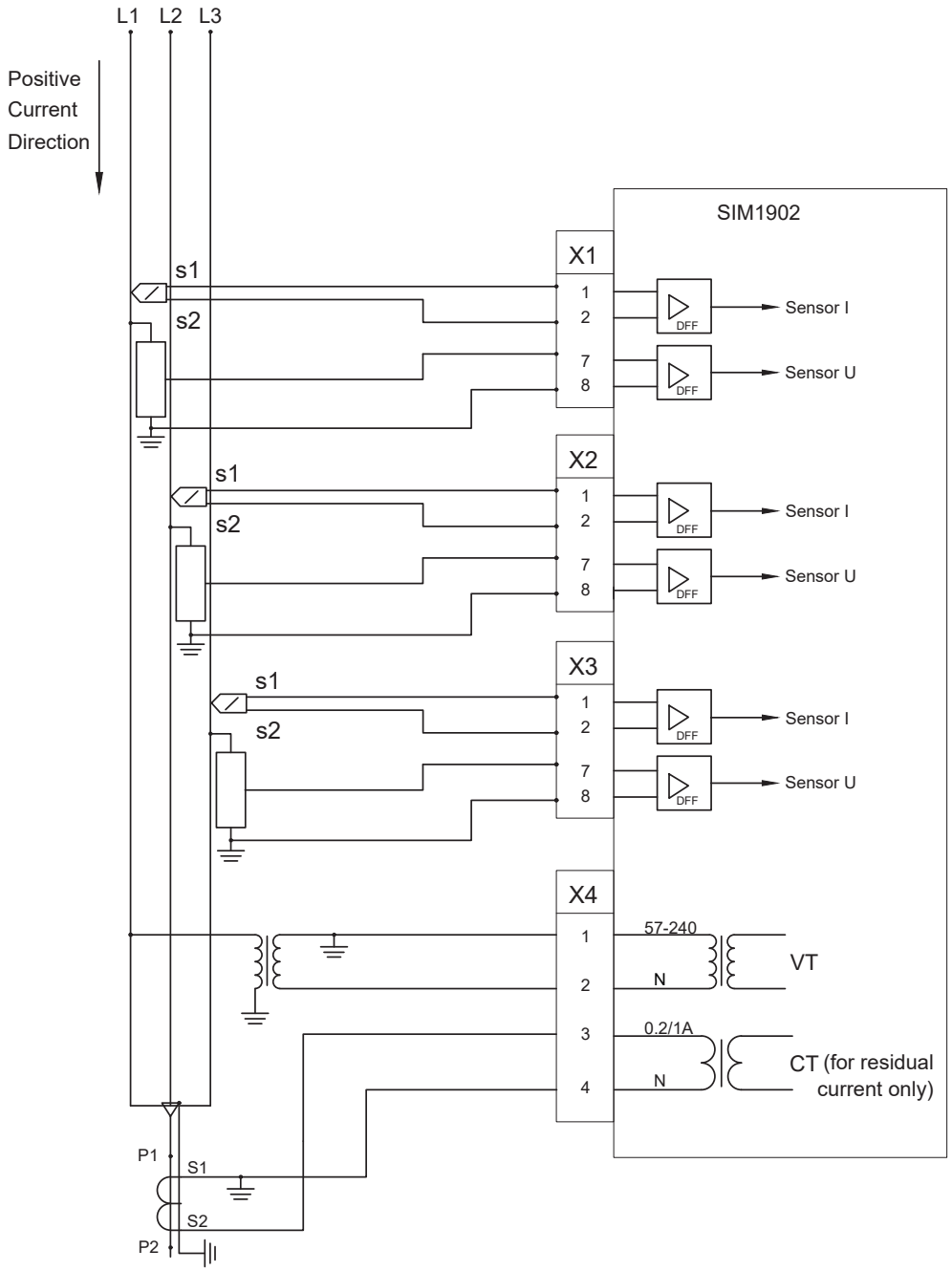

Figure 73: SIM1902 module (VT primary connection phase-to-earth)

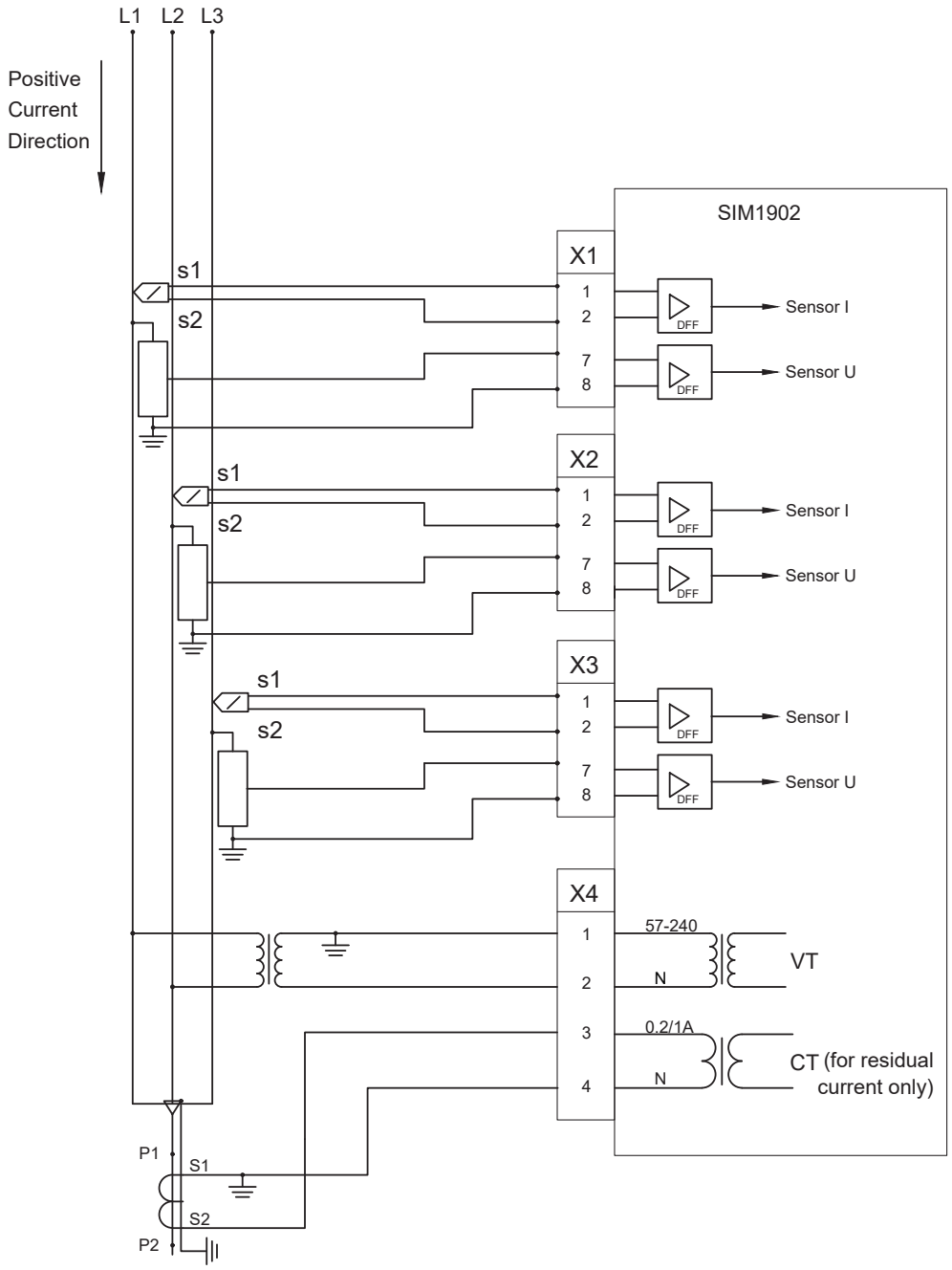

Figure 74: SIM1902 module (VT primary connection phase-to-phase)

5.4.2 Connecting RTD and mA inputs

- Connect the wires from the transducers to the correct device.

  Each terminal for RTDs and mA inputs is dimensioned for one 0.5...2.5 mm^2 (AWG 20-14) wire or for two 0.5...1.0 mm^2 (AWG 20-17) wires.

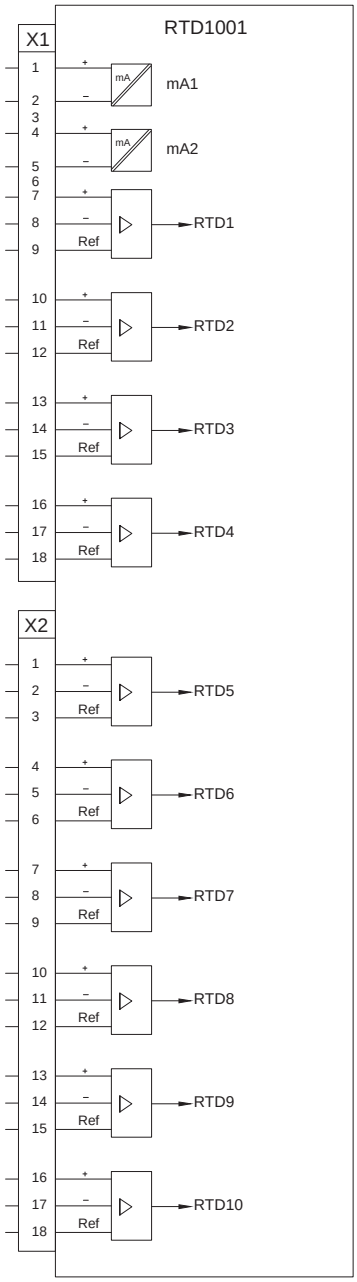

Figure 75: RTD1001

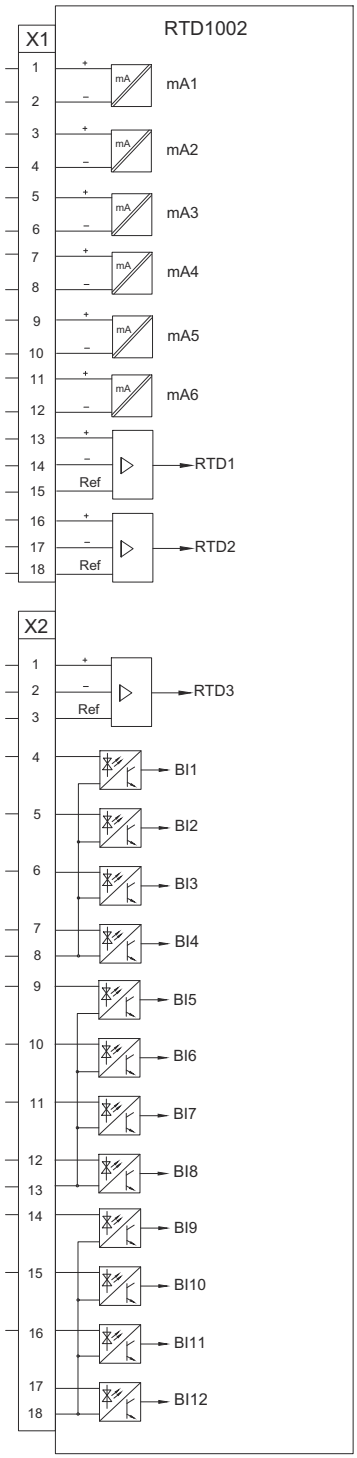

Figure 76: RTD1002

5.4.2.1 Shielding RTD/mA instrument cables

1. Install connectors with cables to the module.

Strip the cables to ensure contact to the grounding bar. The cable position affects the stripping length and position.

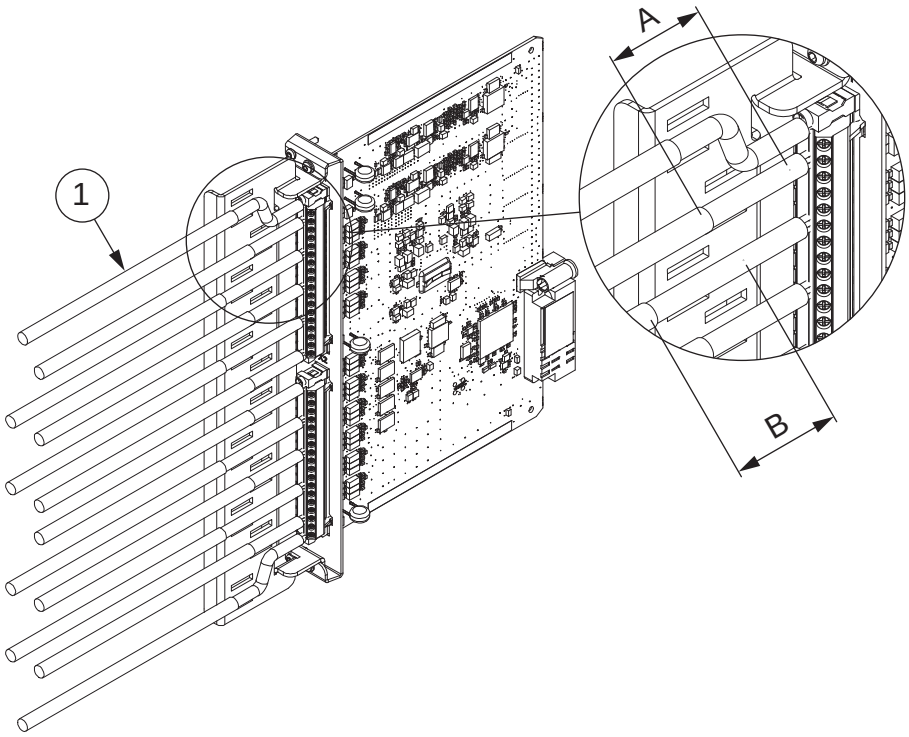

1	Connectors with cables	A/ B	Examples of stripping length and position

Figure 77: Installing connectors

2. Install shield clamps to connect the cable sheathing to the grounding bar.

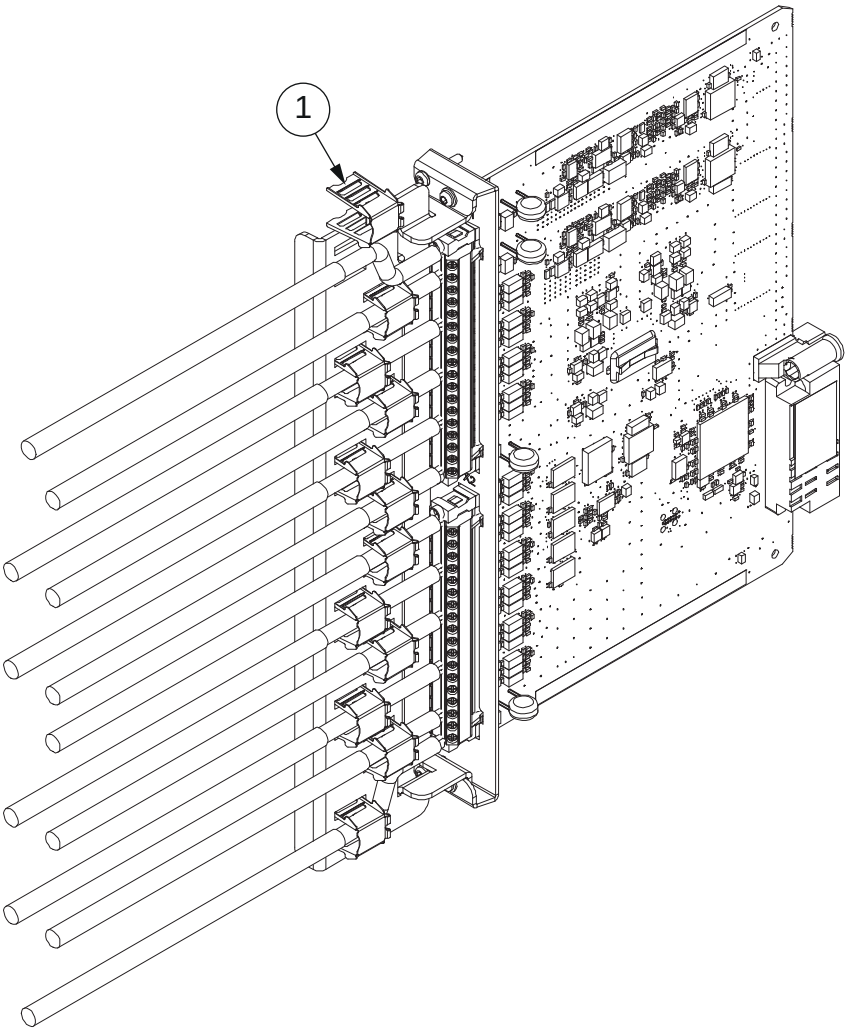

1 Shield clamp

Figure 78: Installing shield clamps

5.5 Connecting binary signals

- Connect the wires for the binary signals to the correct device. Each terminal for binary input and output signal is dimensioned for one 0.5...2.5 mm^2 (AWG 20-14) wire or for two 0.5...1.0 mm^2 (AWG 20-17) wires.

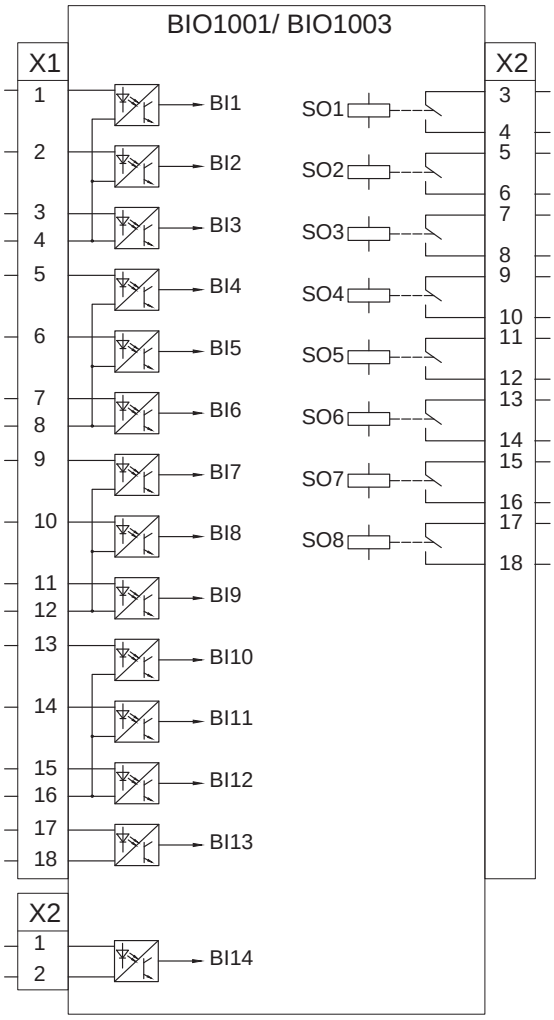

Figure 79: BIO1001/BIO1003

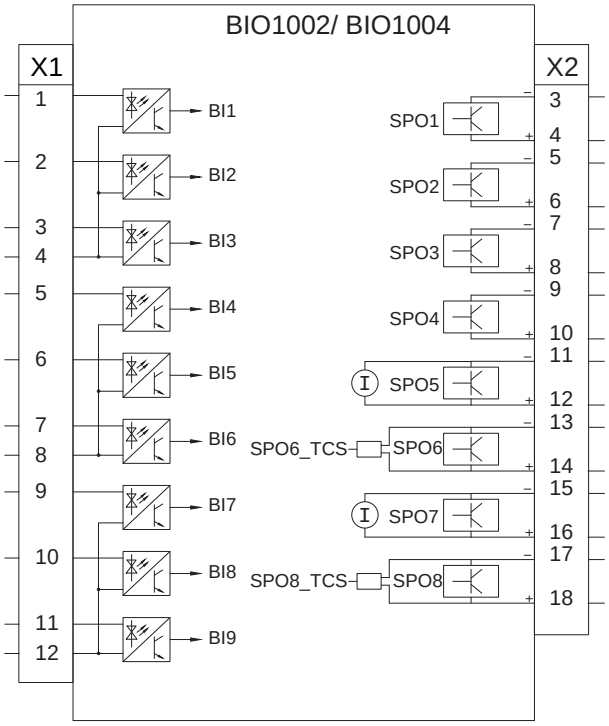

Figure 80: BIO1002/BIO1004

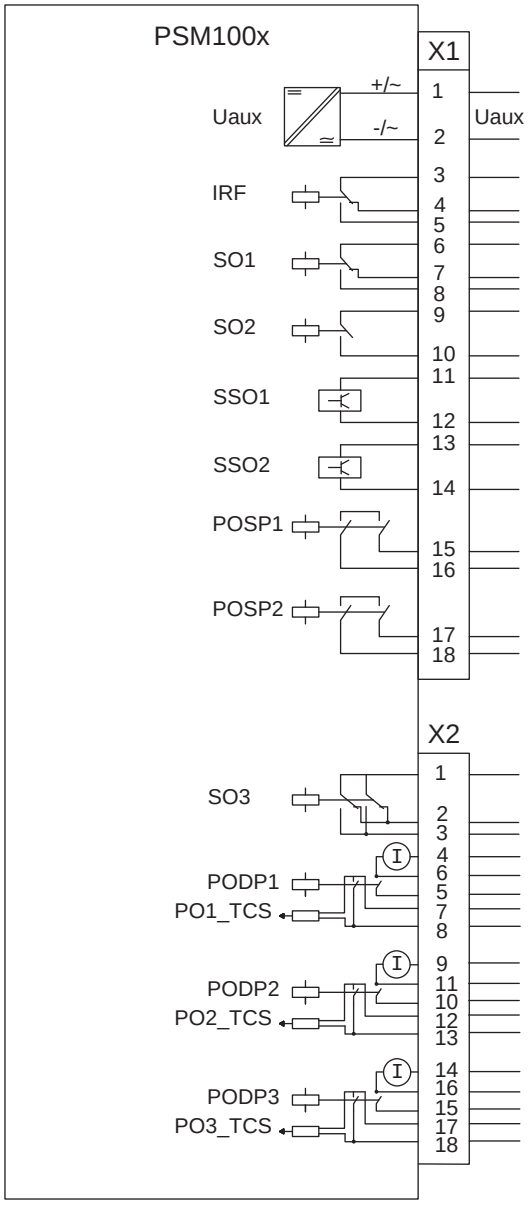

Figure 81: PSM100x

5.6 Connecting power supply

The permitted auxiliary voltage range is found on the protection relay's sticker.

- Connect the protection relay's auxiliary voltage to slot G terminal X1:1-2.
- Connect the positive lead to terminal X1:1.

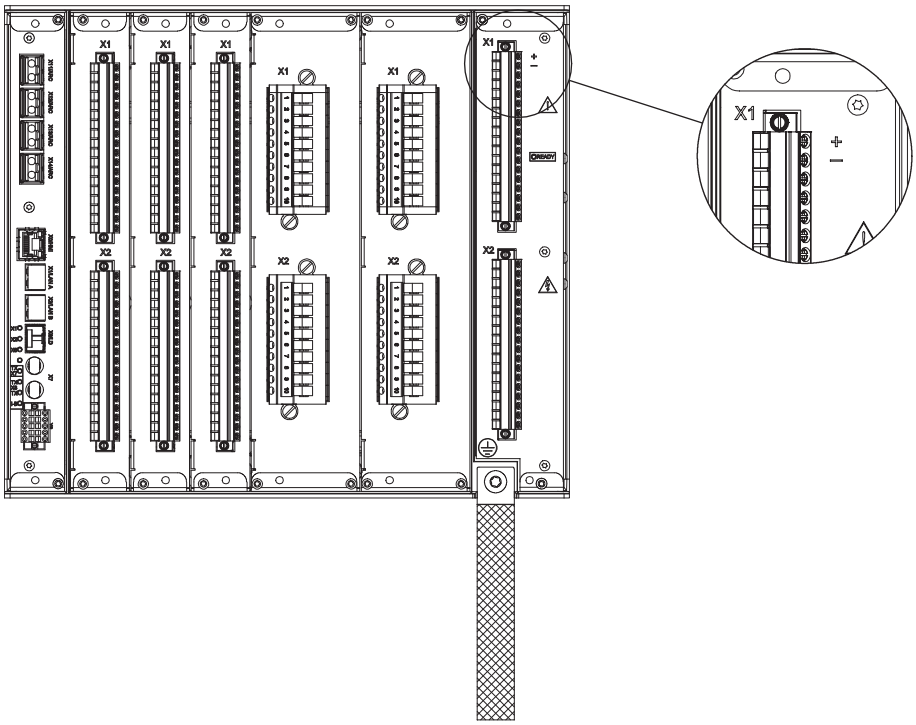

Figure 82: Connecting auxiliary voltage

5.7 Connecting communication

- Before connecting communication, check that the HW module has the correct communication interfaces.

  The communication module is located in slot A2.

See the technical manual for the communication interfaces.

Check the allowed minimum bending radius from the optical cable manufacturer.

5.7.1 Connecting protection communication

Port X6/LD of the communication module is used for protection communication connection. As the optional SFP transceiver is not attached to the port at the time of delivery, it needs to be installed to port X6/LD if protection communication is used.

1. Remove the dust cap from port X6/LD to expose the SFP socket.

2. Plug the SFP transceiver into the socket and ensure that the transceiver is seated and latched properly, that is, the locking lever is on the upper position.
3. Remove the dust cap of the SFP transceiver.
4. Connect the fiber-optic cable to the SFP transceiver.

Do not remove the dust cap from the SFP transceiver if the fiber-optic cable is not immediately connected to the SFP transceiver.

5.8 Connecting external display module

Only one LHMI module can be connected to a protection relay.

1. Connect the LHMI’s power connector.
   a) Check the permitted auxiliary voltage range from the sticker found at the rear side of the LHMI.
   b) Connect the auxiliary voltage leads to the outermost terminals of the LHMI's power connector plug. The polarity is marked on the LHMI's rear plate close to connector X3.
   c) Push the power connector plug to the bottom.
   d) Turn the locking latches to lock position to secure the connector.
2. Connect the LHMI to the protection relay.
   a) Use a CAT6 S/FTP cable to connect the LHMI to the protection relay. See Accessories and ordering data for the cable options.
   b) Connect the cable to the X1.1/Main unit connector on the LHMI and to the X0/HMI connector on the protection relay's communication module.

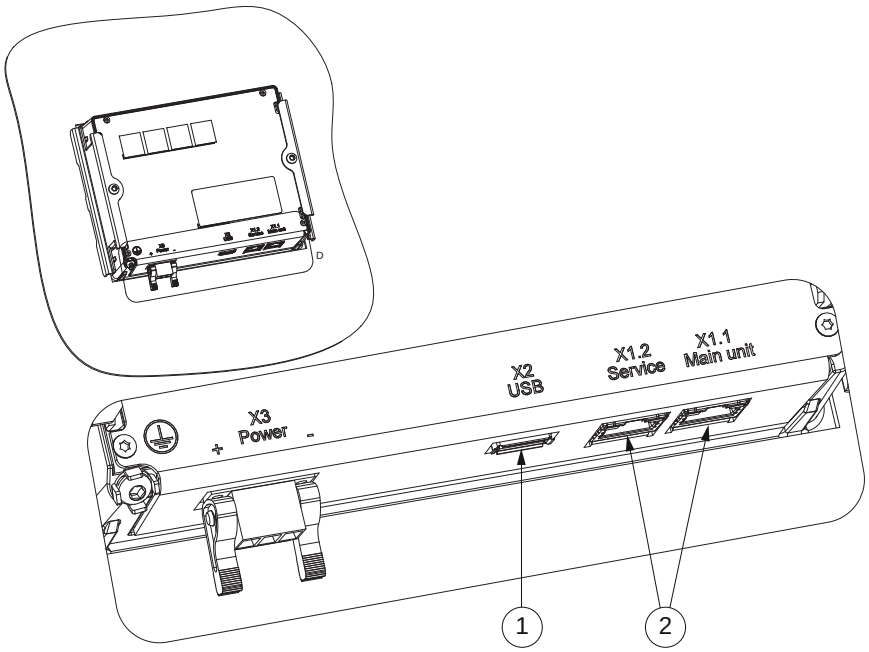

1 USB port

2 RJ-45 ports

Figure 83: Local HMI connectors

6 Checking installation

6.1 Identifying hardware and software version

- Check the label on the case of the protection relay for the hardware and software version information.
- Check the module labels to identify the modules inside the protection relay.

6.2 Checking mounting

- Check that all fixing screws are tight and that all cables are connected.

6.3 Energizing protection relay

Check all connections to external circuitry to ensure correct installation before energizing the protection relay and carrying out the commissioning procedures. Also, remove the protective film.

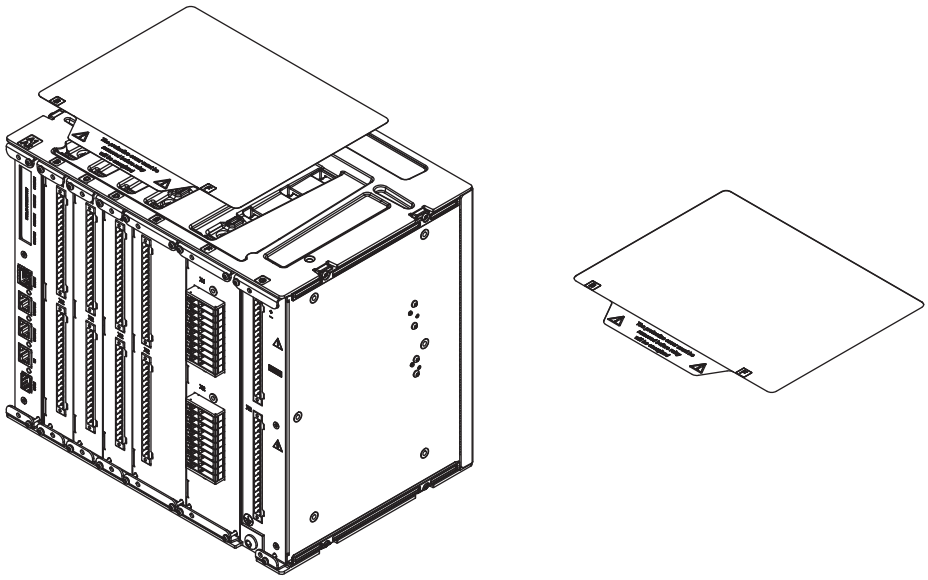

Figure 84: Removing the protective film

1. Energize the power supply of the protection relay and the optional LHMI. This can be done in a number of ways, from energizing a whole cubicle to energizing a single protection relay.

   The following sequence is expected when the protection relay is energized:

   - The green Ready LED starts flashing instantly on the power supply module of the protection relay.
   - Within 90 seconds both the green Ready LED of the power supply module and the Home button on the LHMI show a steady light which indicates a successful start-up.

   The start-up time depends on the size of the application configuration. Application configurations with less functionality have shorter start-up times.

2. Check the self-supervision function via the HMI path **Monitoring** > **IED status** to verify that the protection relay operates properly.

   If the green Ready LED of the power supply module and the Home button on the LHMI continue to flash after the start-up, the protection relay has detected an internal error. Navigate to **Monitoring** > **IED status** to investigate the error description.

7 Removing, repairing and exchanging

7.1 Product life cycle

At some point of the product life cycle, the protection relay is upgraded to a next generation unit. When selecting the original product, already consider the upgrading and extension possibilities that the specific product offers for its whole life cycle.

Protection relay specific options can be found in Retrofit Solutions Database on the Internet *www.abb.com* by following the links within ABB Service Guide or via ABB Product Guide from the product-specific Service & Support sheet.

7.2 Checking protection relay's information

The protection relay information includes detailed information about the device, such as version and serial number.

Check the protection relay's information in one of the alternative ways.

- Select **Menu bar** > **Device information** > **Product identifiers** on the HMI.
- Select **Device information** > **Product identifiers** on the WHMI.

The **Product identifiers** submenu contains product-related information including product type, serial number, order number, production date and SW version.

The **HW modules** submenu contains information about the HW modules.

7.3 Removing protection relay

- Before removing the protection relay, make sure that the auxiliary power is turned off and all wiring is disconnected.

Check with your local ABB if the protection relay can be upgraded.

7.4 Sending protection relay for repair

- In case of product problems, contact the nearest ABB office or representative for consultation and instructions.

7.5 Exchanging protection relay

- To exchange the protection relay with another identical unit, remove the protection relay and install the new one.

  The exchangeable units can be found in the PartsOnLine system, see *www.abb.com/partsonline*. Use of PartsOnLine requires user registration.

  Check with your local ABB if the protection relay can be upgraded.

8 Technical data

8.1 Local HMI

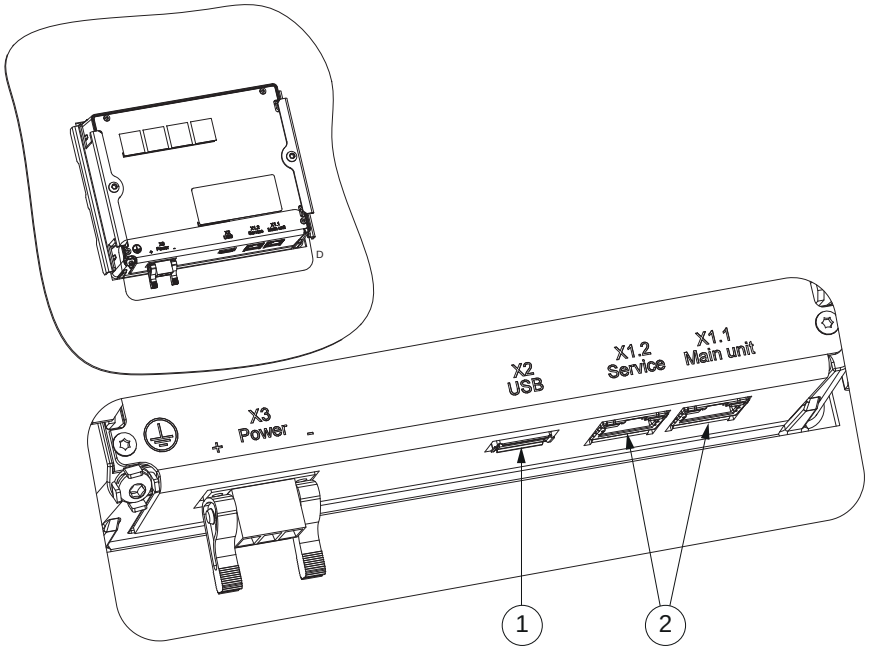

1 USB port 2 RJ-45 ports

Figure 85: Local HMI connectors

8.2 Connector side

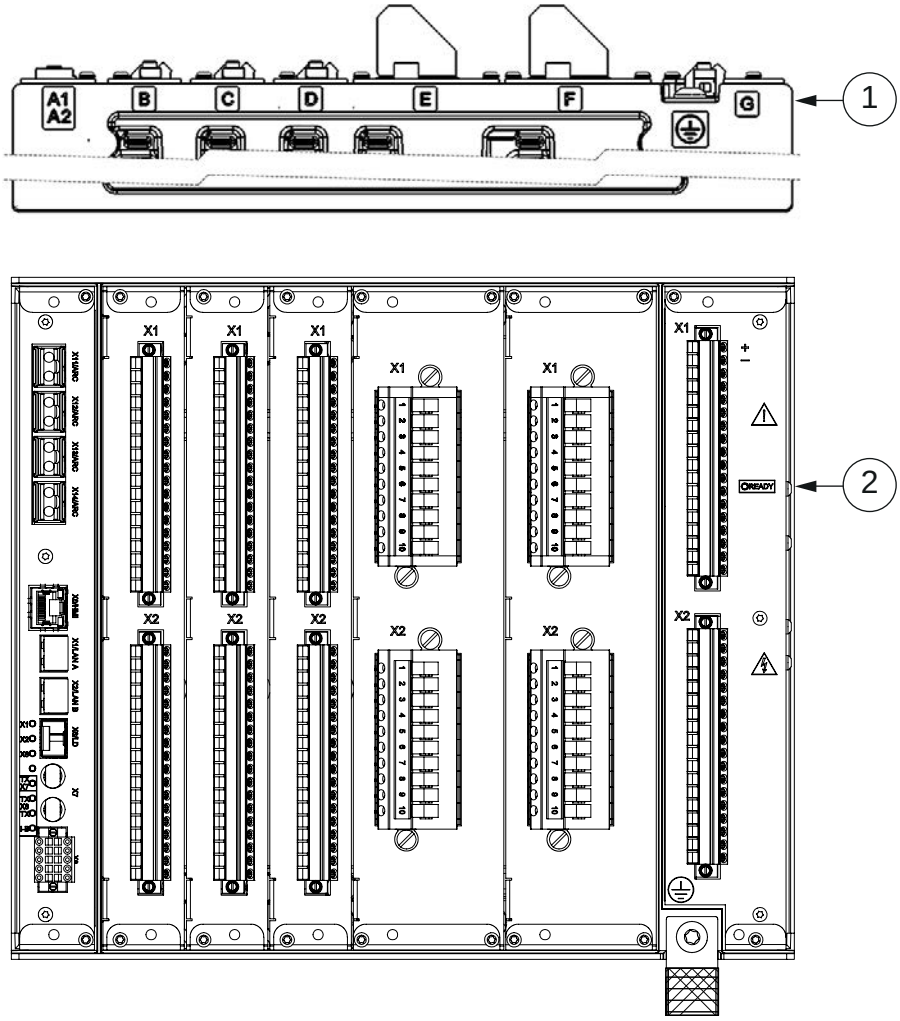

1 Slot markings in enclosure (top and bottom)

2 Ready LED

Figure 86: Connector side of the protection relay

8.3 Dimensions

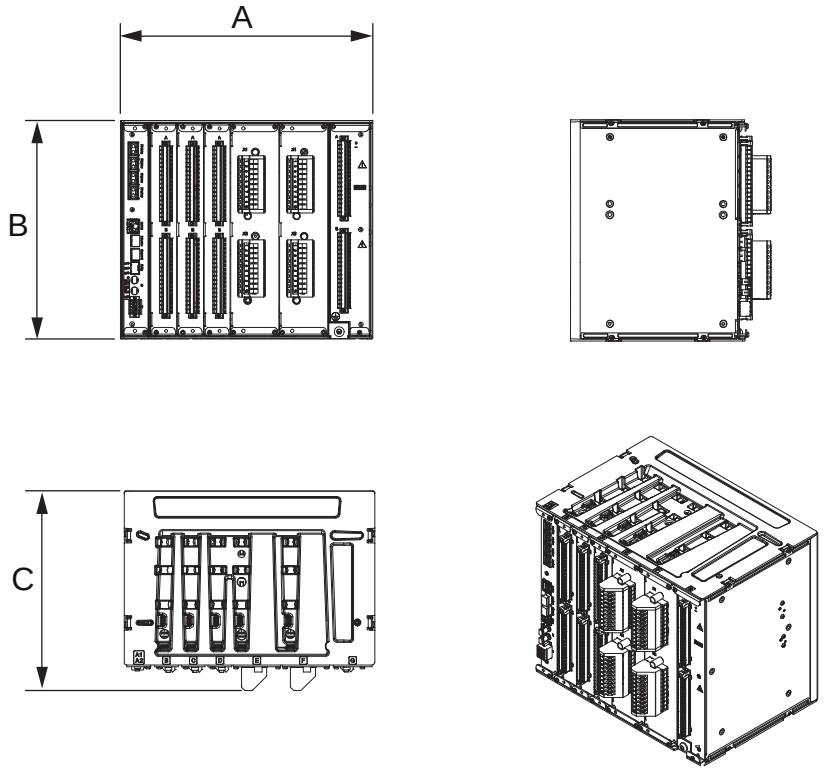

A 304.0 mm (11.9685 in)
B 264.8 mm (10.4252 in)
C 242.2 mm (9.5354 in) with compression type CT/VT connectors
254.1 mm (10.0039 in) with ring-lug type CT/VT connectors
274.0 mm (10.7874 in) with a grounding bar

Figure 87: REX640 main dimensions

Table 7: Dimensions of the local HMI

Description		Value
Width		304.0 mm (11.9685 in)
Height		264.8 mm (10.4252 in)
Depth	With compression type CT/VT connectors	242.2 mm (9.5354 in)
	With ring lug type CT/VT connectors	254.1 mm (10.0039 in)
	With grounding bar	274.0 mm (10.7874 in)
Weight box		6.9...8.8 kg (15.2. 19.4 lb)

Table continues on the next page

Description	Value
Width	212.5 mm (8.3661 in)
Height	177.5 mm (6.9882 in)
Depth	57.6 mm (2.2677 in)
Weight	1.6 kg (3.5 lb)

8.4 Enclosure class

Table 8: Degree of protection of the protection relay

Description	Value
Front/connector side	IP 20 (with ring-lug signal connectors IP 00 or IP 10 depending on wiring)
Top and bottom	IP 30
Rear	IP 40

Table 9: Degree of protection of the local HMI

Description	Value
Front	IP 54
Other sides	IP 20

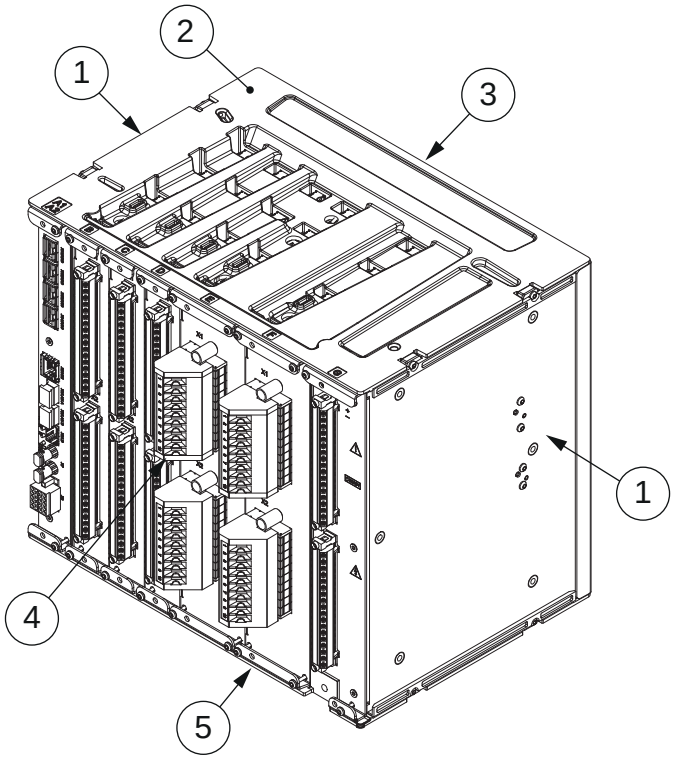

1	Side	4	Front/connector side
2	Top	5	Bottom
3	Rear		

Figure 88: REX640 sides

9 Accessories and ordering data

Table 10: HMI

Item	Order number
LHMI (including mounting bracket kit)	2RCA033008A0001
LHMI, conformal coated (including mounting bracket kit)	2RCA033008A0901
SHMI (including mounting bracket kit)	2RCA033008A0002
SHMI, conformal coated (including mounting bracket kit)	2RCA033008A0902
0.5 m (1.6 ft) connection cable for HMI	1MRS120549-05
1.0 m (3.3 ft) connection cable for HMI	1MRS120549-1
2.0 m (6.6 ft) connection cable for HMI	1MRS120549-2
3.0 m (9.8 ft) connection cable for HMI	1MRS120549-3
5.0 m (16.4 ft) connection cable for HMI	1MRS120549-5
RJ-45 coupler for HMI service port	SYJ-ZBE 8A17

Table 11: Communication

Item	Order number
LC SFP plug-in connector for optical multi-mode media 100M	2RCA045621
LC SFP plug-in connector for optical single-mode media 100M, 20.0 km (12.4 mi)	2RCA045622
LC SFP plug-in connector for optical single-mode media 100M, 50.0 km (31.1 mi)	2RCA045623

Table 12: Mounting

Item	Order number
Back wall / side wall mounting kit	2RCA040872A0001
Roof mounting kit	2RCA040873A0001

Table continues on the next page

Item	Order number
Door mounting with LHMI [1]	2RCA040882A0001
19" relay rack mounting with LHMI [1]	2RCA041125A0001
19" relay rack mounting without LHMI [1]	2RCA041127A0001
19" relay rack mounting for relay and LHMI, including a provision for RTXP 24 test switch, 6U [1]	2RCA051498A0001
19" relay rack mounting for relay and LHMI, including a provision for RTXP 24 test switch, 7U [1]	2RCA051503A0001
Surface mounting kit for HMI [1]	2RCA038783A0001
Tilt mounting kit for HMI [1]	2RCA038782A0001
Grounding bar kit for RTD module	2RCA039981A0001

Table 13: Arc sensors

Item	Order number
ARC lens sensor cable 1.5 m (4.9 ft)	2RCA040290A0001
ARC lens sensor cable 3.0 m (9.8 ft)	2RCA040290A0003
ARC lens sensor cable 5.0 m (16.4 ft)	2RCA040290A0005
ARC lens sensor cable 7.5 m (24.6 ft)	2RCA040290A0007
ARC lens sensor cable 15.0 m (49.2 ft)	2RCA040290A0015
ARC loop sensor cable 5.0 m (16.4 ft), plastic fiber	2RCA051658A0005
ARC loop sensor cable 10.0 m (32.8 ft), plastic fiber	2RCA051658A0010
ARC loop sensor cable 15.0 m (49.2 ft), plastic fiber	2RCA051658A0015
ARC loop sensor cable 20.0 m (65.6 ft), plastic fiber	2RCA051658A0020
ARC loop sensor cable 25.0 m (82.0 ft), plastic fiber	2RCA051658A0025
ARC loop sensor cable 30.0 m (98.4 ft), plastic fiber	2RCA051658A0030

Table continues on the next page

[1] Powder painting, RAL 7035 flat. (Gloss: 60L 65-85 acc. to EN-ISO 2813)

Item	Order number
ARC loop sensor cable 40.0 m (131.2 ft), glass fiber	2RCA041050A0040
ARC loop sensor cable 50.0 m (164.0 ft), glass fiber	2RCA041050A0050
ARC loop sensor cable 60.0 m (196.9 ft), glass fiber	2RCA041050A0060
Blind extension cable for ARC loop sensors, 2.0 m (6.6 ft), to be used with plastic fiber loops only	2RCA051662A0001
ARC sensor fiber, 100 m, delivery length	1MSC 380018.100
ARC sensor fiber, 300 m, delivery length	1MSC 380018.300
ARC sensor fiber, 500 m, delivery length	1MSC 380018.500
ARC sensor fiber connector (25 pcs.)	SJG BP05226-02
ARC sensor fiber connector spacer sleeve (25 pcs.)	2RCA056821

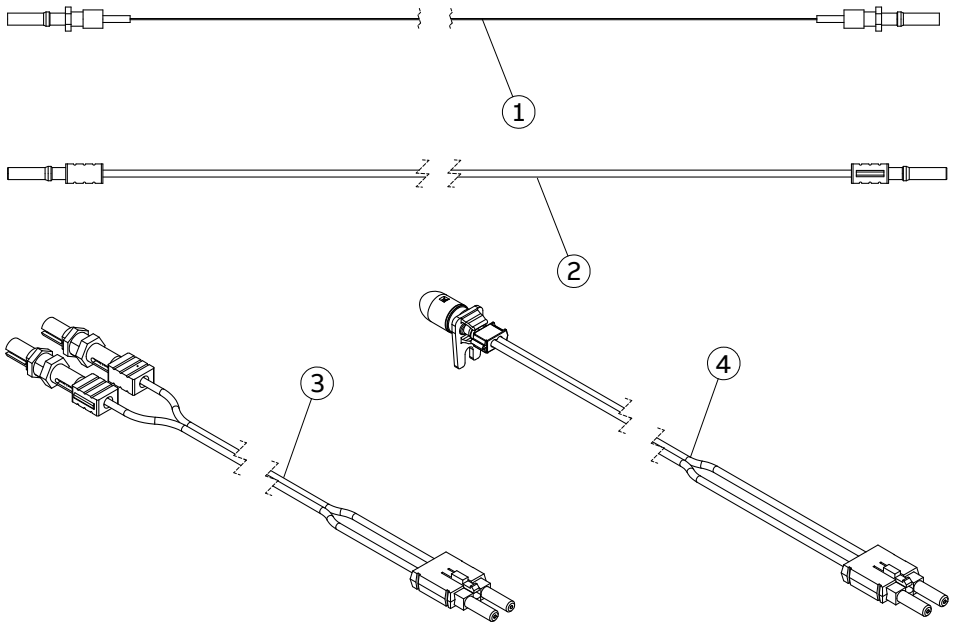

1 ARC loop sensor cable, glass fiber
2 ARC loop sensor cable, plastic fiber
3 Blind extension cable for ARC loop sensors
4 ARC lens sensor cable

Figure 89: Arc sensors and accessories

Table 14: Connectors

Item	Order number
Compression-type signal connectors	SYJ-ZRK 2Z18P1
Ring-lug type signal connectors	SYJ-ZRK 33X18
Push-in type signal connectors	SYJ-ZRK 53P18PM
1 CT-1 VT compression-type connector	2RCA040474A0004
5 CT compression-type connector	2RCA040474A0001
5 VT compression-type connector	2RCA040474A0002
1 CT-4 VT compression-type connector	2RCA040474A0003
1 CT-1 VT ring-lug type connector	2RCA041297A0004
5 CT ring-lug type connector	2RCA041297A0001
5 VT ring-lug type connector	2RCA041297A0002
1 CT-4 VT ring-lug type connector	2RCA041297A0003
RS-485/IRIG-B connector	SYJ-ZRK 44P10

10 Glossary

AWG	American wire gauge
CT	Current transformer
EIA-485	Serial communication standard according to Electronics Industries Association
EMC	Electromagnetic compatibility
HMI	Human-machine interface
HW	Hardware
IEC	International Electrotechnical Commission
IRIG-B	Inter-Range Instrumentation Group's time code format B
LC	Connector type for glass fiber cable, IEC 61754-20
LCP	Liquid crystal polymer
LHMI	Local human-machine interface
PC	1. Personal computer 2. Polycarbonate
RJ-45	Galvanic connector type
RoHS	Restriction of hazardous substances
RS-485	Serial link according to EIA standard RS485
RTD	Resistance temperature detector
SHMI	Switchgear HMI
SI	Sensor input
SW	Software
USB	Universal serial bus
VT	Voltage transformer
WHMI	Web human-machine interface

ABB Distribution Solutions
Digital Substation Products
P.O. Box 699
FI-65101 VAASA, Finland
Phone +358 10 22 11

www.abb.com/mediumvoltage
www.abb.com/relion
www.abb.com/substationautomation

1MRS759115 E