ABB motion control products

Wall chart MicroFlex

Part numbers

FMH2A03TR-EN23W

FMH	FMH = MicroFlex family
2	2 = 115-230 V AC (1Ø or 3Ø) AC input
A03	A03 = 3 A, A06 = 6 A, A09 = 9 A continuous output
T	T = Built in mains power supply
R	R = Requires external regeneration resistor*
E	E = Encoder feedback. R = Resolver feedback
N	N = No options specified
2	2 = RS232 serial port, 4 = RS485 serial port
3	3 = Customer supplied 24 V DC
W	W = ABB white

Cooling requirements

Control continuous current rating	Air flow velocity
3 A 6 A 9 A	No additional cooling required. 1.0 m/s (3.3 ft/s) or greater. 2.5 m/s (8.2 ft/s) or greater.

IMPORTANT! 6 A and 9 A models require additional cooling. Optional fan tray FAN001-024 provides sufficient cooling for all models.

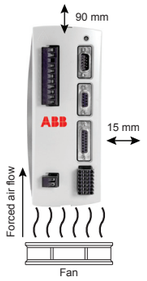

X1 - Single phase AC input & motor power out

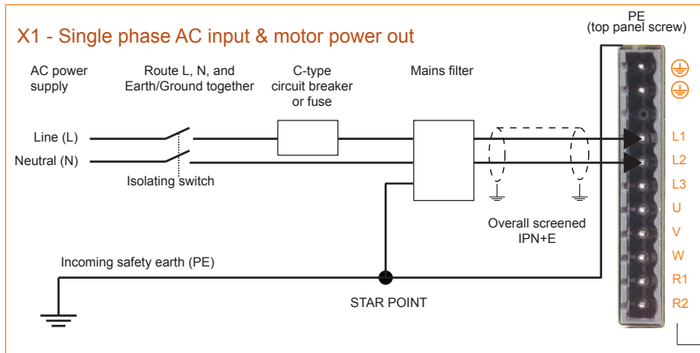

X1 - Three phase AC input & motor power out

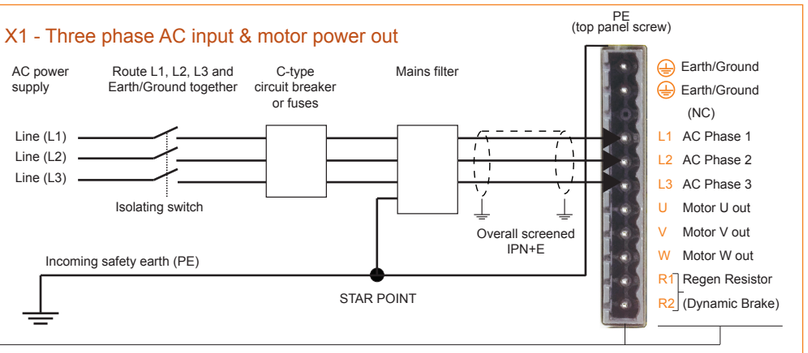

Recommended power filters

Drive continuous current rating	1Ø AC power ABB catalog number	3Ø AC power ABB catalog number	24 V DC control supply ABB catalog number
3 A 6 A 9 A	FI0015A00† FI0015A02† FI0029A00	FI0018A00 FI0018A00 FI0018A03	FI0014A00 (all models)

IMPORTANT! Compliant with EN61000-6-3 (Class B).

†Alternatively, foot-mount filter FI0029A00 may be used. This filter is specially designed for use with any single-phase MicroFlex.

X1 - Regenerating resistors

ABB catalog number	Power W	Res Ω
RGJ139	100	39
RGJ160	100	60
RGJ260	200	60
RGJ360	200	60

X6 - RS232/RS485

	RS232	RS485/RS422
1	(NC)	(NC)
2	RXD	RX-
3	TXD	TX-
4	(NC)	(NC)
5	GND	GND
6	(NC)	(NC)
7	RTS	TX+
8	CTS	RX+
9	(NC)	(NC)

X7 - Encoder out

1	CHA+
2	CHB+
3	CHZ+
4	(NC)
5	DGND
6	CHA-
7	CHB-
8	CHZ-
9	(NC)

Notes

If using incremental encoder feedback, X7duplicates the input on connector X8.

If using resolver feedback, X7 creates a simulated encoder output.

If using SSI encoder feedback, X7 creates simulated encoder output bursts representing change of position.

If using Halls-only feedback, no output is produced.

Status LED

Green: AC power OK, drive enabled, normal operation.

Red: AC power OK, drive not enabled, no errors.

Green/Red alternating: AC power not present, no errors.

Green: flashing: Firmware download in progress

Red flashing: An error has occurred. The number of flashes (followed by a pause) indicates which error has occurred:

Error code (flashes)	Meaning
1	DC bus overvoltage trip
2	IPM (integrated power module) trip
3	Overcurrent trip
4	Overspeed trip
5	Feedback trip
6	Motor overload (I^2t) trip
7	Overtemperature trip
8	Drive overload (It) trip
9	Following error trip
10	Error input triggered
11	Phase search error
12	All other errors, including: Internal supply error, encoder supply error, parameter restore failure, power base not recognized.

LED definitions

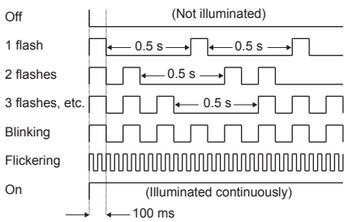

Recommended system wiring

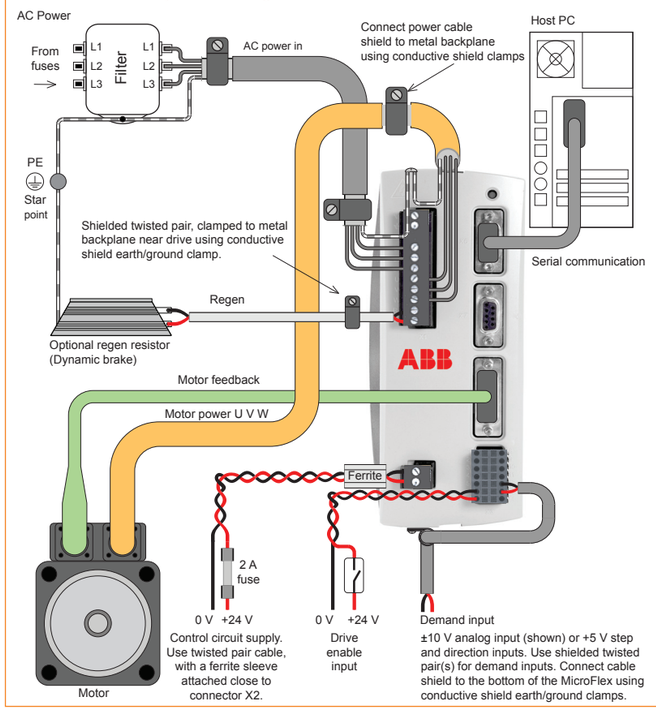

X2 - 24 V control circuit input

1	0 V
2	+24 V DC input

A 24 V DC supply must be provided to power the controlling electronics.

Continuous current 0·6 A.

X8 - Feedback in - encoder

Incremental encoders				SSI encoders			
1	CHA+	9	CHA-	1	Data+	9	Data-
2	CHB+	10	CHB-	2	Clock+	10	Clock-
3	CHZ+	11	CHZ-	3	(NC)	11	(NC)
4	Sense	12	5 V, 200 mA out	4	Sense	12	+5 V 200 mA out
5	Hall U-	13	DGND	5	(NC)	13	DGND
6	Hall U+	14	Hall W-	6	(NC)	14	(NC)
7	Hall V-	15	Hall W+	7	(NC)	15	(NC)
8	Hall V+			8	(NC)		

Encoder models (- EN23 / - EN43) accept incremental encoder feedback (with or without Halls), Halls-only feedback, or SSI encoder feedback.

X8 - Feedback in - resolver

Left LED: Fault / signal loss
Right LED: (Unused)

1	REF+
2	COS+
3	SIN+
4	(NC)
5	AGND
6	REF-
7	COS-
8	SIN-
9	Chassis

X3 - Input / Output

1	Shield	8	Shield
2	Status-	9	Dir
3	Status+	10	Step
4	DIN0-	11	DGND
5	DIN0+	12	AIN0-
6	Drive enable-	13	AIN0+
7	Drive enable+	14	AGND

Drive enable	Opto-isolated 24 V input. Must be connected to allow drive to operate.
DIN0	Opto-isolated 24 V input. Can be configured as a reset, error, stop or phase search input.
Step & Dir	+5 V single-ended step and direction inputs, used as the position reference.
AIN0	±10 V differential input, used as the speed or torque reference.
Status	Opto-isolated status/error output, indicates enabled/disabled status of drive. Current sourced from pin 3 is output on pin 2.

LT0188A04

www.abb.com/motion

The information in this document is subject to change without notice. ABB assumes no responsibility for any errors that may appear in this document.