# Interconnection protection

## of renewable and distributed generation

Juha Ylinen, Product Line Manager

# Content

**Introduction**

– Renewables and Distributed Generation (DG)

– Why power systems are changing? What is the impact? How to manage the impact?

**Connection rules**

– Where and how to implement? Grid Code Examples. Islanding Detection

**Interconnection Protection in DA Products**

– Functionality and offering in Relion®

©ABB

# Interconnection protection of Renewable & Distributed Generation

## Definition of renewable

### Non-renewable energy sources

- Non-renewable energy is derived from finite natural resources that have developed for millions of years.
- Non-renewable energy sources are divided into fossil and nuclear fuels.
  - Fossil fuels include crude oil, natural gas and coal, and are all derived from organic matter, drilled for and pumped out or obtained by mining.
  - Nuclear fuels are primarily obtained by mining and refining uranium ore.

### Renewable energy sources

- Renewable energy is derived from infinite natural resources, such as sunlight, wind, rain, tides, waves and geothermal heat.
- Renewable energy sources contribute to the energy mix in four main areas:
  - Electricity generation
  - Air and water heating/ cooling
  - Transportation
  - Off-grid energy services in sparsely populated rural areas

©ABB

# Interconnection protection of Renewable & Distributed Generation

## Examples of Finite and Renewable resources

### Finite

Gas

Coal

Liquid Fuels

Nuclear

### Renewable

Biogas

Geothermal

Wind

Hydro

Wave & tidal

Solar

# Interconnection protection of Renewable & Distributed Generation

## Renewable energy in electricity generation

### Renewable energy sources

**Wind power**

- Capturing the air flow through wind turbines to convert the generated mechanical energy into electricity
- Reliable and consistent power generation from year to year but with significant variation on a shorter timescale

**Hydropower**

- Harnessing the power of moving water, typically by releasing water in dams constructed to store water
- Opening the reservoir releases water to flow through turbines to generate electricity

**Biopower**

- Using biomass to generate electricity
- Burning biomass to produce steam to spin a turbine and convert the generated mechanical energy into electricity

**Solar power**

- Converting sunlight into electricity either directly by using photovoltaic (PV) cells or indirectly in concentrated solar power plants
- Used in both distributed generation and central-station, utility-scale power plants

# Interconnection protection of Renewable & Distributed Generation

## Renewable share and growth estimates

### Global share estimates

**Estimated Renewable Energy Share of Global Electricity Production,** End-2015

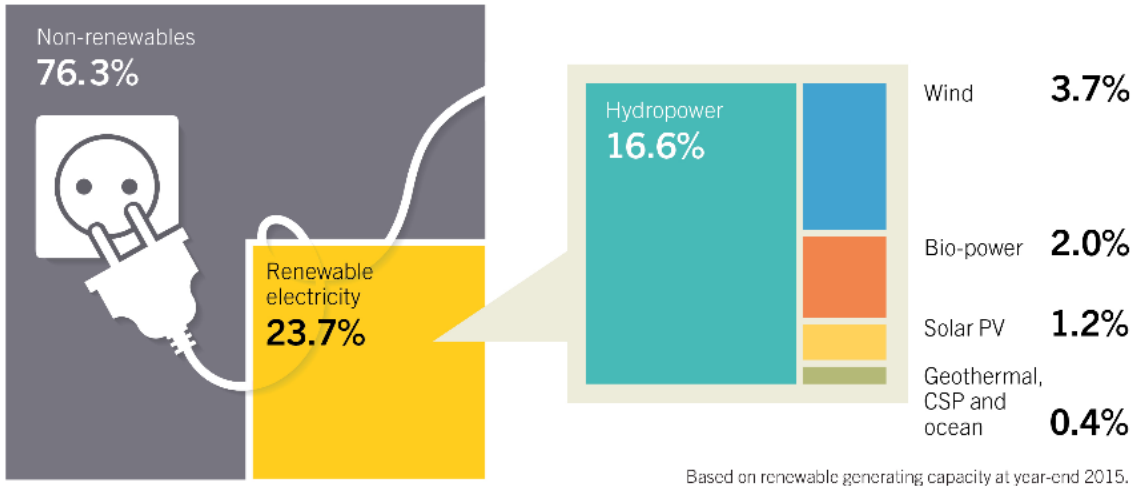


REN21 *Renewables 2016 Global Status Report*

### Global growth estimates

**Average Annual Growth Rates of Renewable Energy Capacity and Biofuels Production,** End-2010 to End-2015

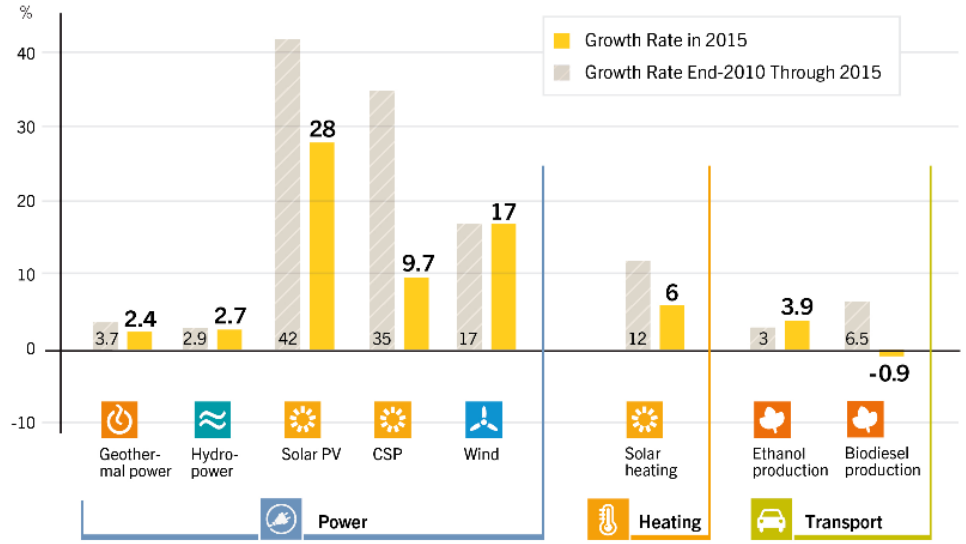


REN21 *Renewables 2016 Global Status Report*

# Interconnection protection of Renewable & Distributed Generation

## Renewable energy sources need flexibility

### Estimated power demand over a week in 2012 vs. 2020, Germany

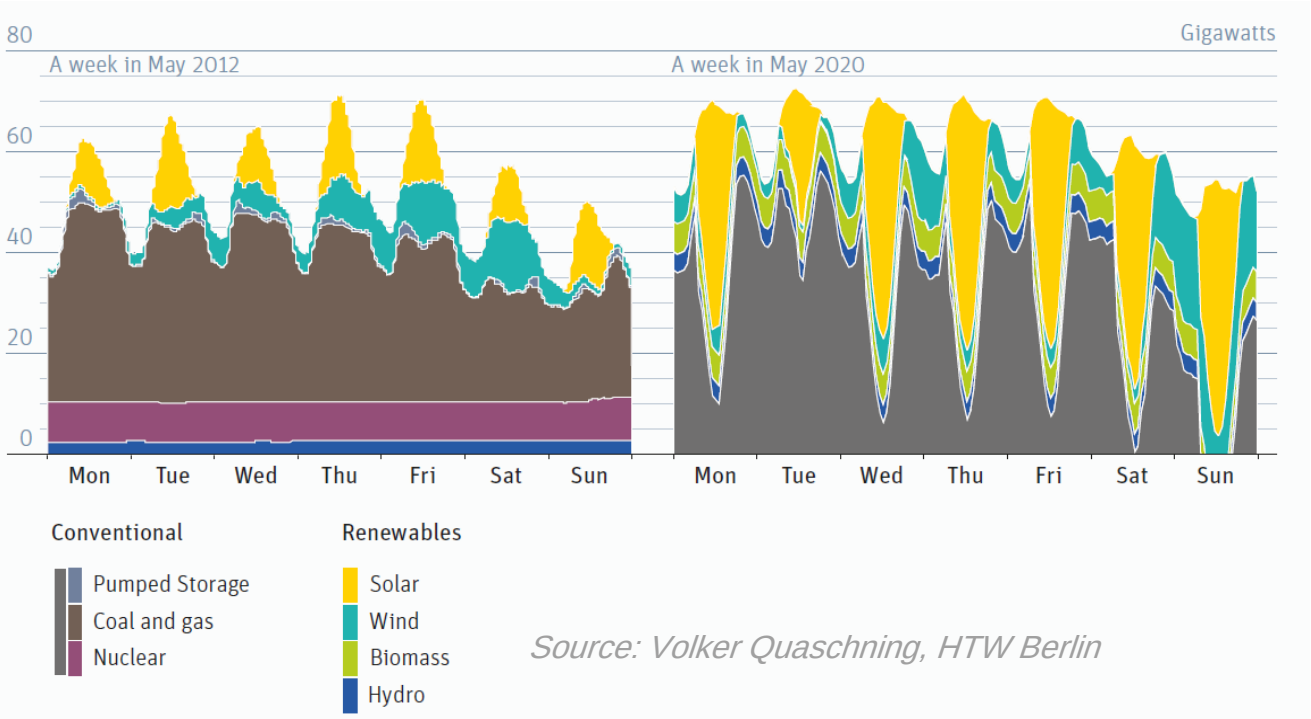


*Source: Volker Quaschning, HTW Berlin*

- Daily and even hourly variability of the Renewable based electricity generation will require even more flexibility in the future
  - From the demand (load)
  - From the backup sources

# Interconnection protection of Renewable & Distributed Generation

## Definition of Distributed Generation

**DG is one part of DER**

- **Distributed Energy Resources (DER)** is a wide definition
  - Controlling of customer loads
  - Distributed Generation
  - Battery storage systems
  - Electric vehicles
  - Onsite Generation
- Trend of increasing amount of DER's connected ongoing
- **Distributed Generation (DG)** characteristics
  - Produced closer to consumers, avoiding of the longer transmission of the energy
  - Several smaller size distributed instead of less larger size
  - Typically use renewable energy

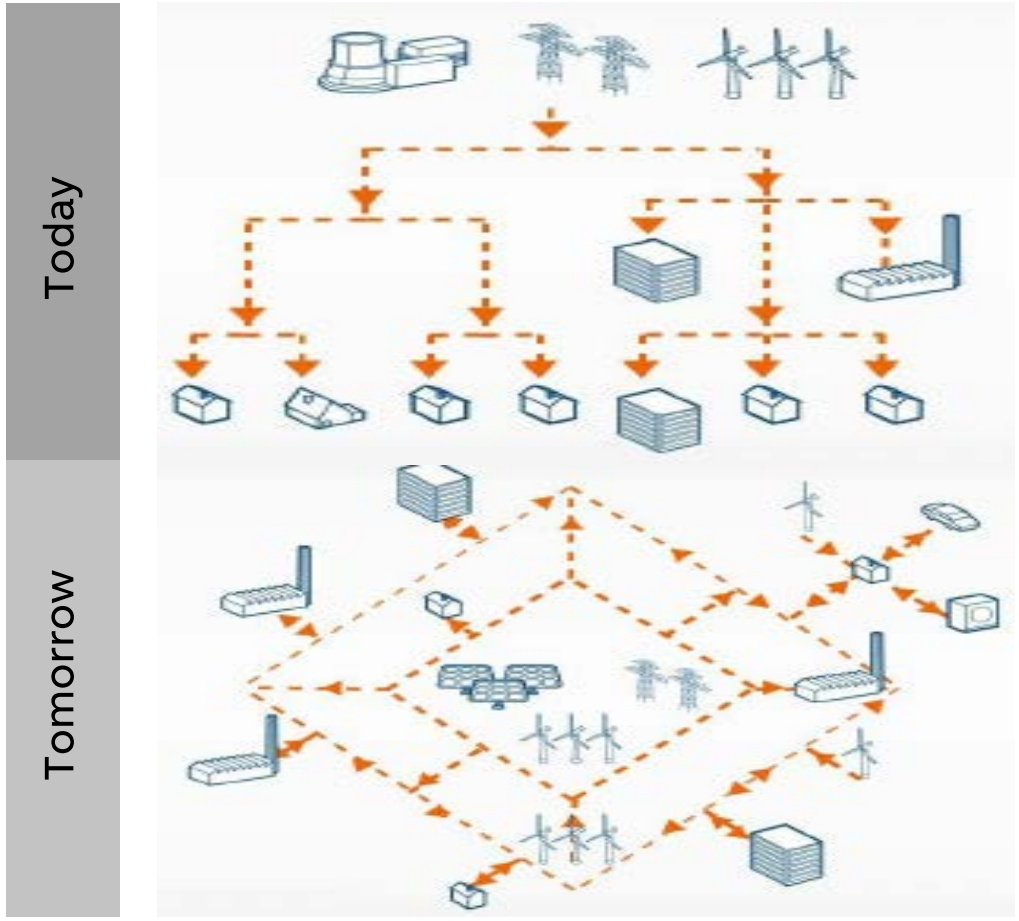


©ABB

# Interconnection protection of Renewable & Distributed Generation

## Why power systems are changing?

**Power systems are changing due to global drivers like**

1) Climate change / environmental issues and
2) Increasing dependency on electricity and therefore there is a

- Need for large-scale integration of renewable, **low-emission ($CO_2$)** energy sources in high-, medium- and low-voltage (HV, MV and LV) networks,
- Need to improve **energy efficiency** of the whole energy system and
- Need to improve electricity **supply reliability**

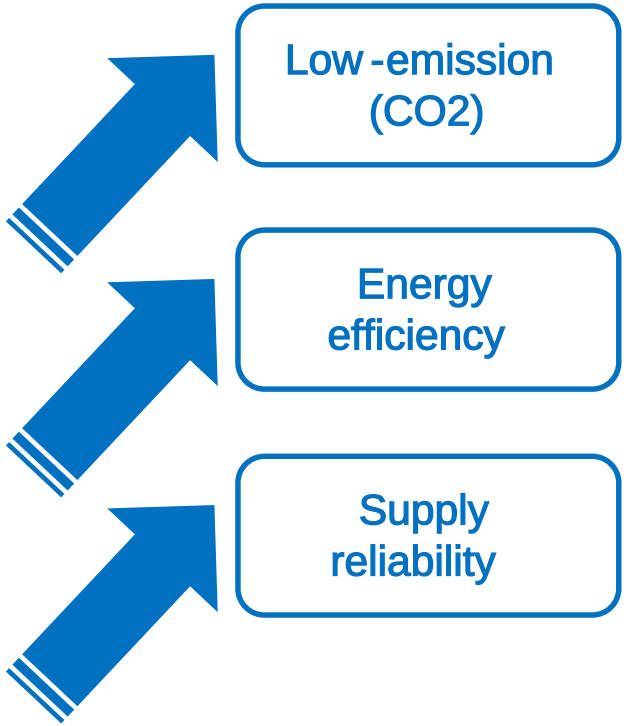


©ABB

# Interconnection protection of Renewable & Distributed Generation

What is the impact of these changes?

## HV network

Large inverter-connected wind turbines connected to network

- Without rotational inertia
- With variable nature

Traditional power-plants reduced

- Less inertia (rotating mass)
- Less frequency-, voltage- and power balancing support available
  - ➢ More and Larger frequency and voltage variations
  - ➢ HV network capacity constraints may become an issue

## MV/LV network

Inverter-connected wind turbines and photovoltaics (PV) increasing amount

- Without rotational inertia
- With variable nature
  - ➢ Traditional MV protection and Islanding detection may maloperate
  - ➢ HV network stability issues are possible if large amount DG is simultaneously disconnected

Risk for stability issues

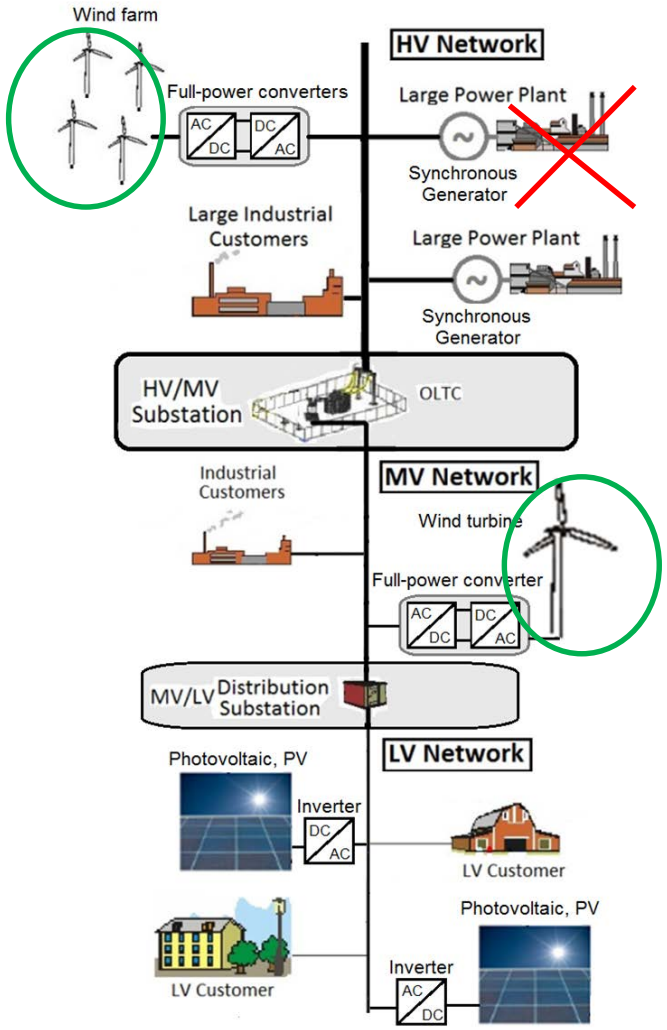

# Interconnection protection of Renewable & Distributed Generation

What is needed to manage the impacts?

## Previously

DG units have been required to be disconnected during utility grid faults / islanding situations

- Based on voltage, frequency, rate-of-change-frequency or vector shift
- Without any specific requirements to support utility grid (HV Network)

## Grid Codes today for DG units

After the DGs amount has increased it has become more common to require HV network stability support from DGs

- Prevent unnecessary disconnection during HV network faults and frequency disturbances
- Support voltage and frequency during disturbances
  - P/f and Q/U control
  - Reactive current contribution during faults/low voltage situations
  - Virtual inertia

## Upcoming

In the future DER has potential for Active Network Management

- Frequency-, voltage- and power balancing support
- Improve energy efficiency i.e. reduce demand for network capacity and transmission losses
- Increase the reliability of electricity supply (e.g. micro grids)

More advanced MV protection and Islanding detection methods

©ABB

# Interconnection protection of Renewable & Distributed Generation

## Connection rules

### DG unit Grid Code Requirements

- Grid Codes are a technical specifications those facility connected into the public power system needs to fulfill at Point of Common Coupling (PCC)
  - Typically specifies the behavior of the generator under normal conditions as well as during disturbances
  - Traditionally required only for large conventional power plants
  - Increasing amount or DG's connected also to the lower voltage levels has created the need to revise and upgrade Grid Codes
- Grid Codes vary depending on country, type and size of generation unit
- International workgroups are targeting to harmonize different national Grid Codes, as an example ENSTO-E in Europe

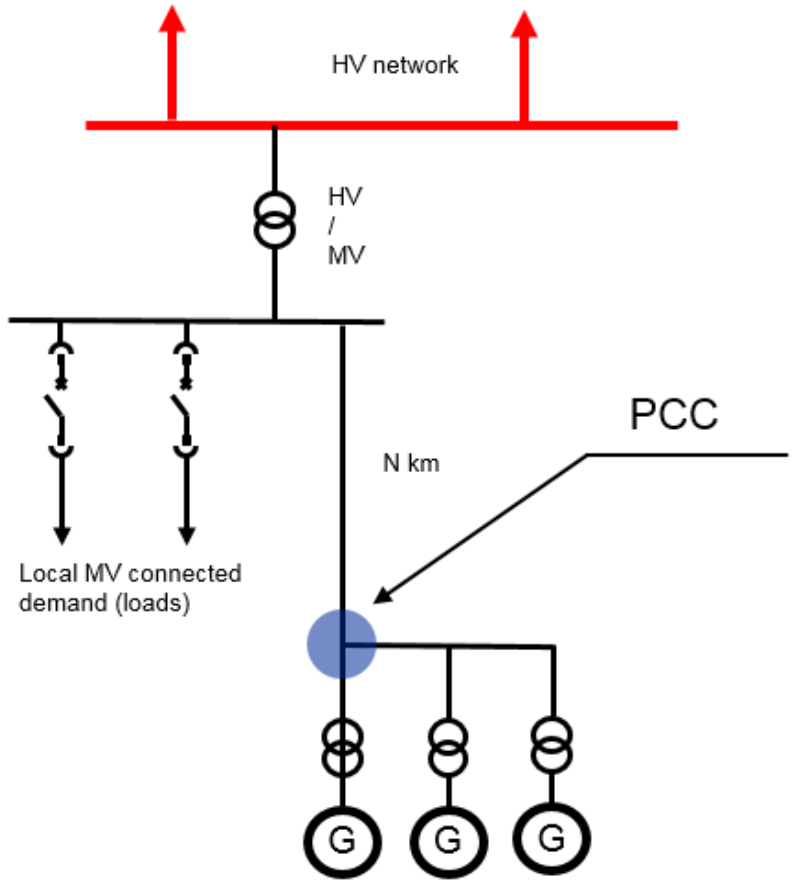

# Interconnection protection of Renewable & Distributed Generation

## Definition of Interconnection protection

**Interconnection Protection functions are fulfilling the grid codes at PCC**

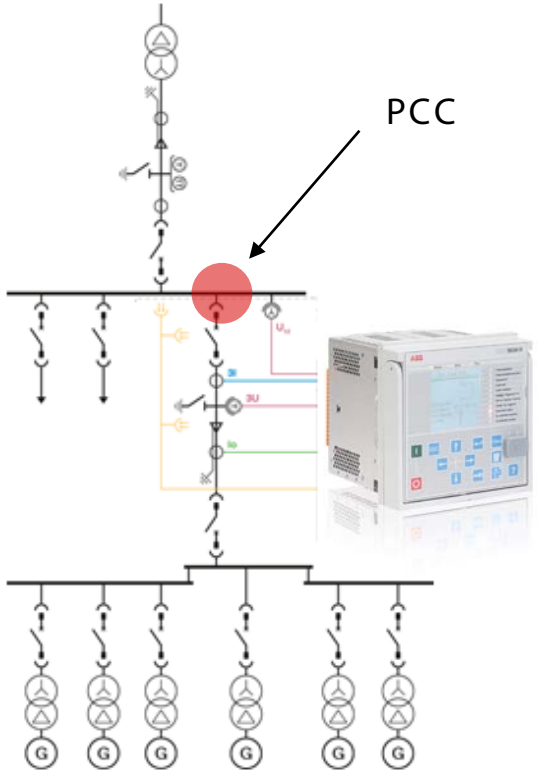


- Point of Common Coupling (PCC)
  - Is located in the substation where the Distributed Generation (DG) is being interconnected together with the grid
  - Sometimes also referred as Point of Common Connection or Point of Connection (PoC)
- Interconnection protection
  - Is a set of functions those are used together to fulfill the requirements defined by the grid codes for the PCC
  - Sometimes also referred as Intertie protection

# Interconnection protection of Renewable & Distributed Generation

## Grid Code Examples

### Low-Voltage-Ride-Through (LVRT) Requirements for Different Types of DG Units

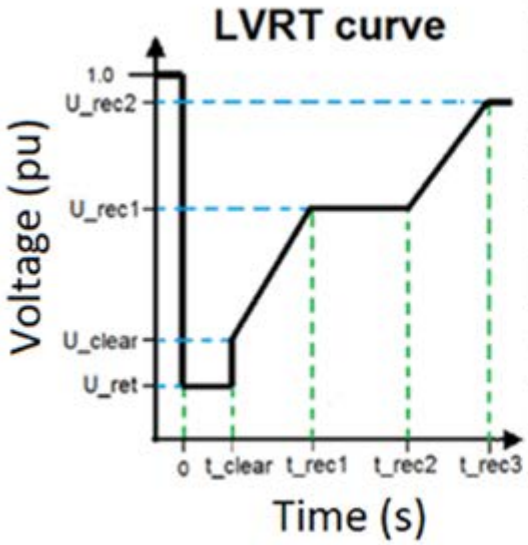


| DG unit TYPE B AND C | | | |
|---|---|---|---|
| Synchronous generators | | | |
| U_ret | 0.05 - 0.3 | t_clear | 0.14 - 0.25 |
| U_clear | 0.7 - 0.9 | t_rec1 | t_clear |
| U_rec1 | U_clear | t_rec2 | t_rec1 - 0.7 |
| U_rec2 | 0.85 - 0.9 & ≥ U_clear | t_rec3 | t_rec2 - 1.5 |
| Converter based DG | | | |
| U_ret | 0.05 - 0.15 | t_clear | 0.14 - 0.25 |
| U_clear | U_ret - 0.15 | t_rec1 | t_clear |
| U_rec1 | U_clear | t_rec2 | t_rec1 |
| U_rec2 | 0.85 | t_rec3 | 1.5 - 3.0 |

| DG unit TYPE D | | | |
|---|---|---|---|
| Synchronous generators | | | |
| U_ret | 0 | t_clear | 0.14 - 0.25 |
| U_clear | 0.25 | t_rec1 | t_clear - 0.45 |
| U_rec1 | 0.5 - 0.7 | t_rec2 | t_rec1 - 0.7 |
| U_rec2 | 0.85 - 0.9 | t_rec3 | t_rec2 - 1.5 |

| DG unit TYPE D | | | |
|---|---|---|---|
| Converter based DG | | | |
| U_ret | 0 | t_clear | 0.14 - 0.25 |
| U_clear | U_ret | t_rec1 | t_clear |
| U_rec1 | U_clear | t_rec2 | t_rec1 |
| U_rec2 | 0.85 | t_rec3 | 1.5 - 3.0 |

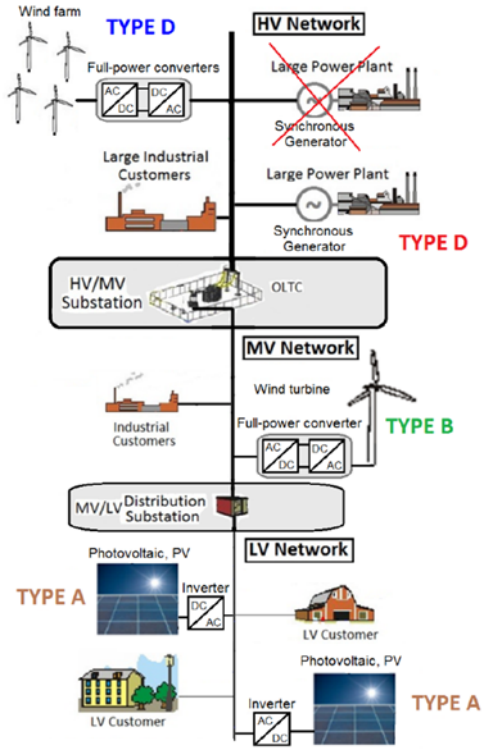


©ABB

# Interconnection protection of Renewable & Distributed Generation

## Grid Code Examples

### Frequency -Ride-Through (FRT) Requirements for Different Countries of DG Units

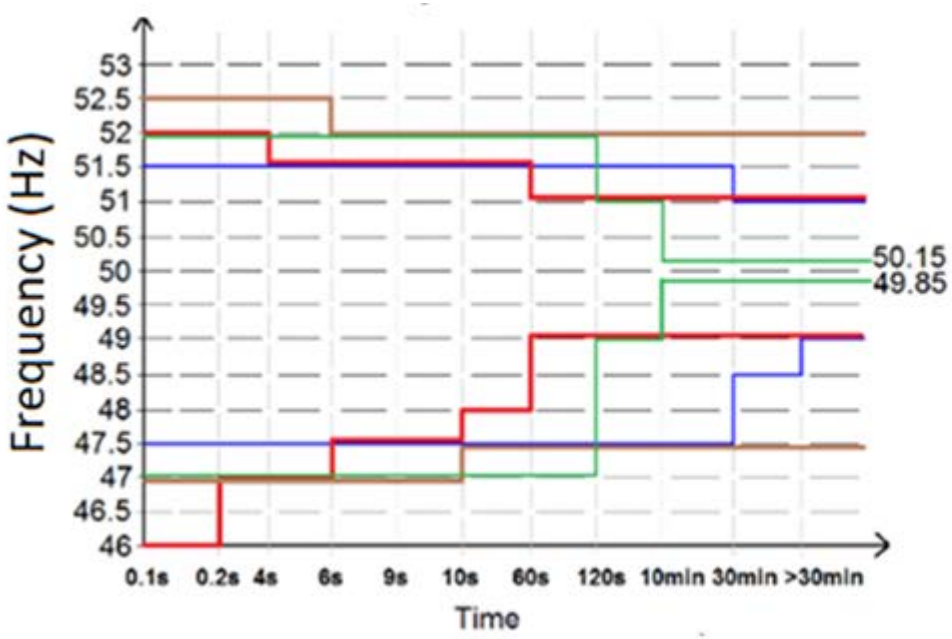

# Interconnection protection of Renewable & Distributed Generation

## Origin of Islanding Detection

### Creation of ”healthy island” by opening MV feeder CB due to

Fault at parallel MV feeder causing unwanted tripping of MV feeder

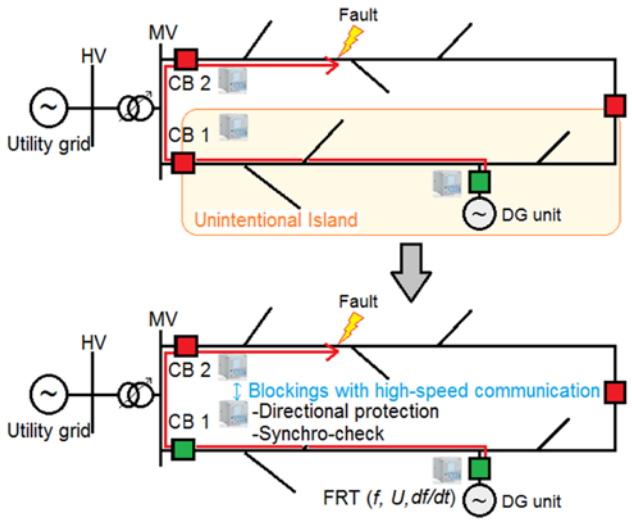


Or planned maintenance works at corresponding MV feeder

### Creation of “faulty island”

For instance earth-fault at the corresponding MV feeder

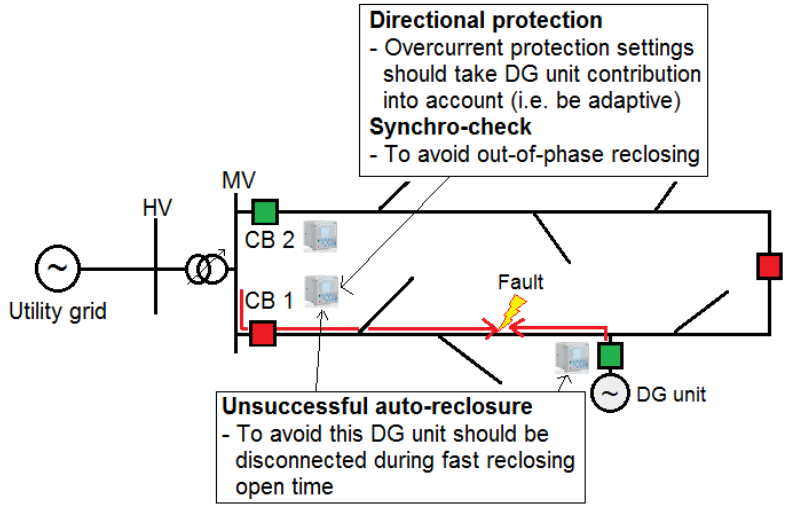


**Both “healthy” and “faulty” islanding situations should be detected**

# Interconnection protection of Renewable & Distributed Generation

## Islanding Detection

### Traditional islanding detection techniques

- Communication-based (transfer trip)
- Local detection-based (active and passive)
  - Passive methods are frequency or rocof, Voltage or Voltage Vector Shift (VVS) based methods

### Other islanding detection techniques

- Hybrid (passive + active)
- Combined (communication + passive)

### Common challenges of traditional passive methods

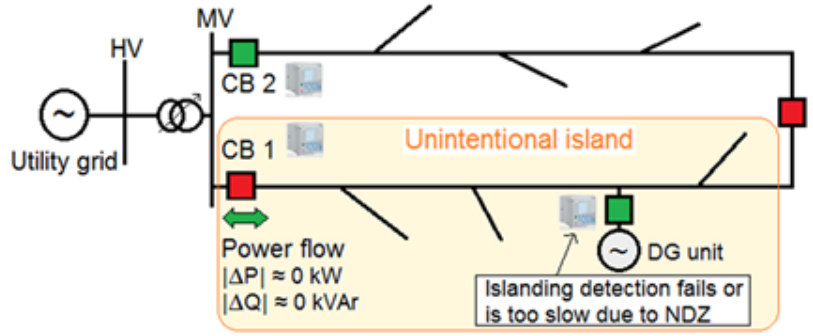


- Non-detection zone (NDZ) near a power balance

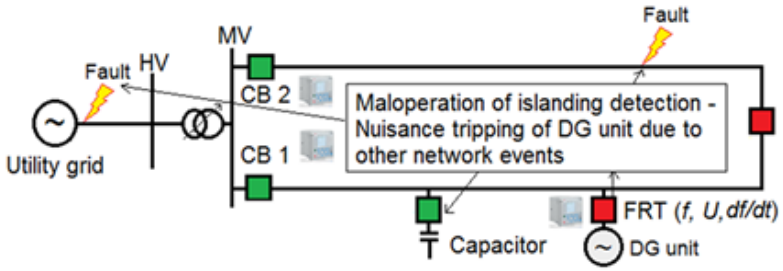


- Unwanted tripping due to other network events

©ABB

# Interconnection protection of Renewable & Distributed Generation

Functionality in Relion ® DA products

## Low-voltage ride-through protection

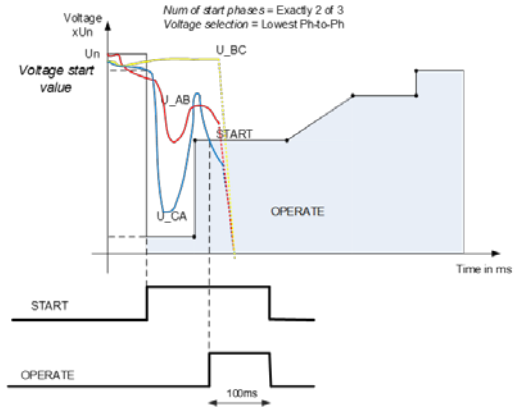


## Directional reactive power undervoltage protection

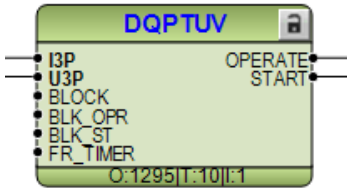


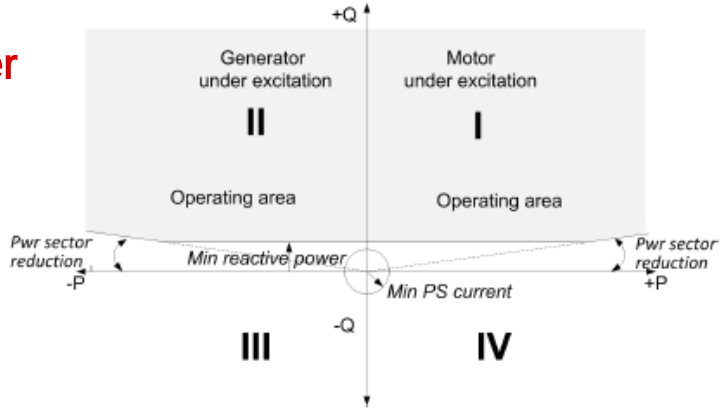


## Voltage vector shift protection

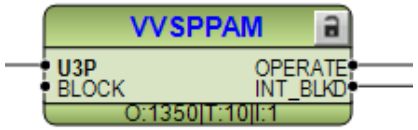


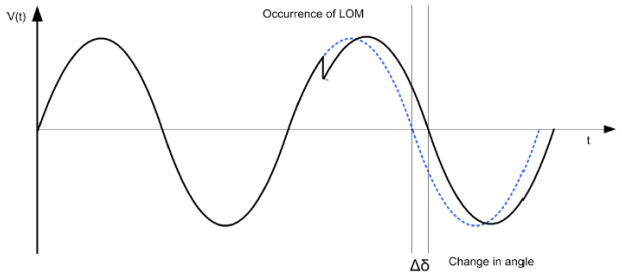


## ++Engineering flexibility

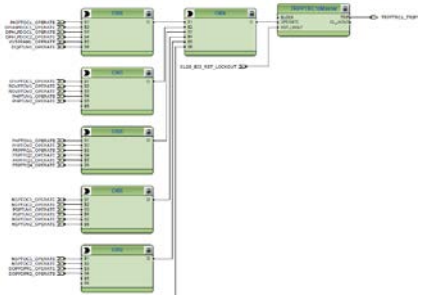

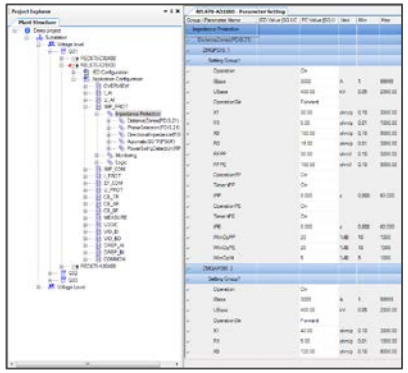

# Interconnection protection of Renewable & Distributed Generation

## DA Products Offering

### in Relion® product family

| | 615 | | | 620 | | 630 | |
|---|---|---|---|---|---|---|---|
| | | | | | | | |
| | REG615conf. A | REF615 L & N | | REF620 | | REG630 | REF630 |
| Low-voltage ride -through | 3 stages | 3 stages | OPTIONAL | 3 stages | OPTIONAL | 3 stages | |
| Directional reactive power undervoltage | 1 stage | 1 stage | | 2 stages | | 2 stages | 2 stages |
| Voltage vector shift | 1 stage | 1 stage | | 1 stage | | 1 stage | |
| Frequency protection | Included | Included | | Included | | Included | Included |
| Voltage protection | Included | Included | | Included | | Included | Included |