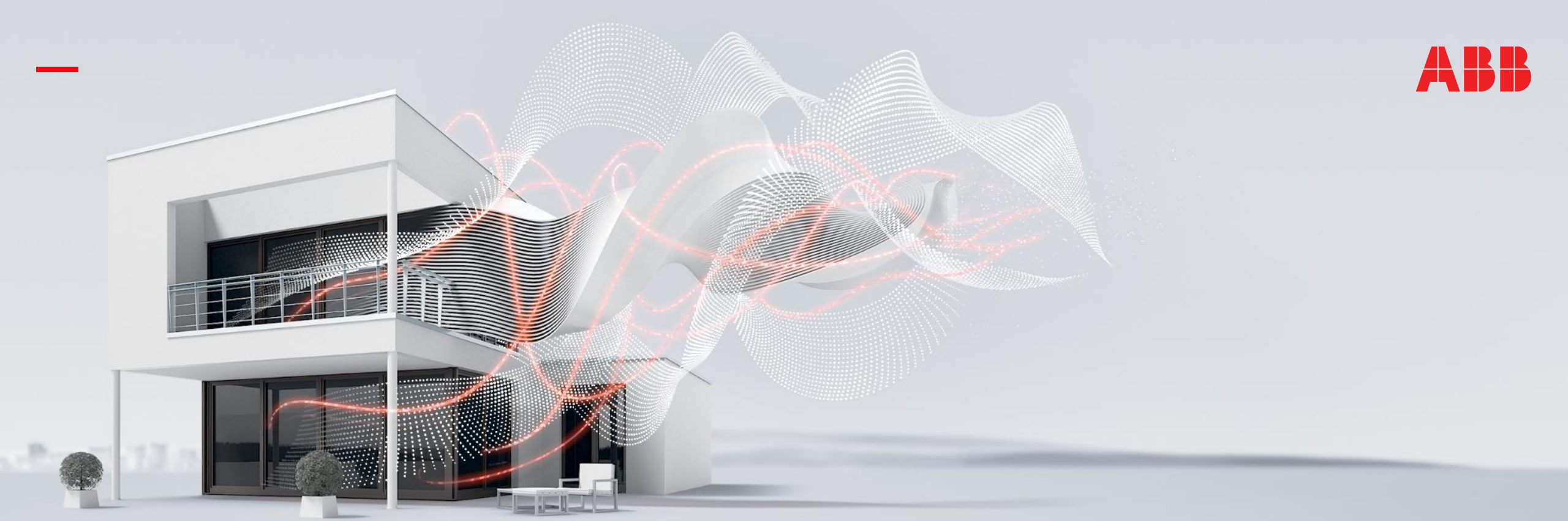

MAY 2018

ClimaECO – HVAC with ABB i-bus®KNX

Webinar – Competence Center Europe – Building Automation

Ilija Zivadinovic, Martin Wichary, Juergen Schilder, Thorsten Reibel

ClimaECO: ABB i-bus® KNX HVAC Solutions

Agenda

ClimaECO – Intro

Argumentation and Principle

Introduction into the Product Range

Links and Timetable

ClimaECO

by

ABB

ClimaECO?

ECOlogical Climate?

ECOnomical Climate?

Perhaps …

For sure!

Everybody needs …

Heating …

and/or Cooling

Heating with ClimaECO

. . .

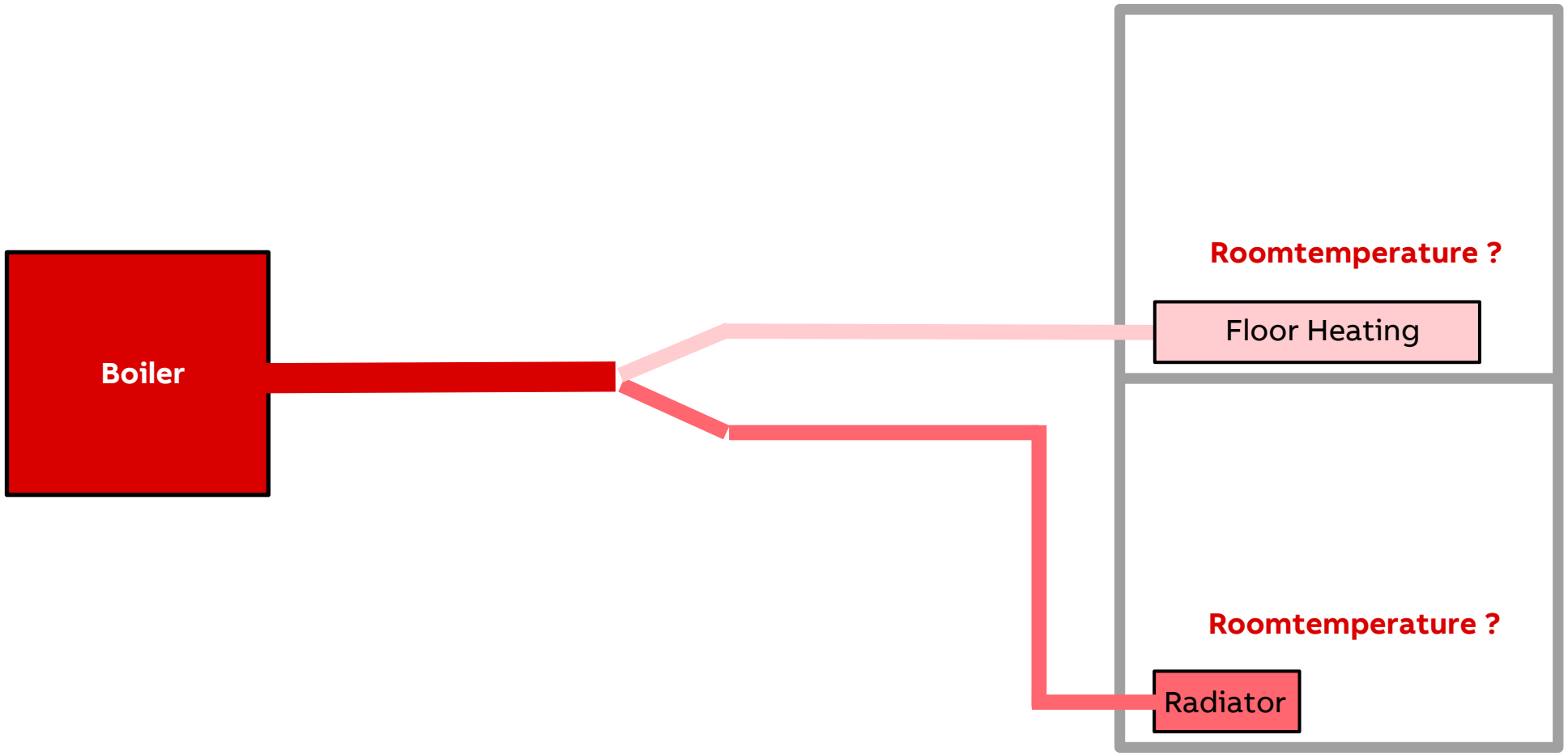
Boiler
Roomtemperature ?
Floor Heating
Roomtemperature ?
Radiator

©ABB

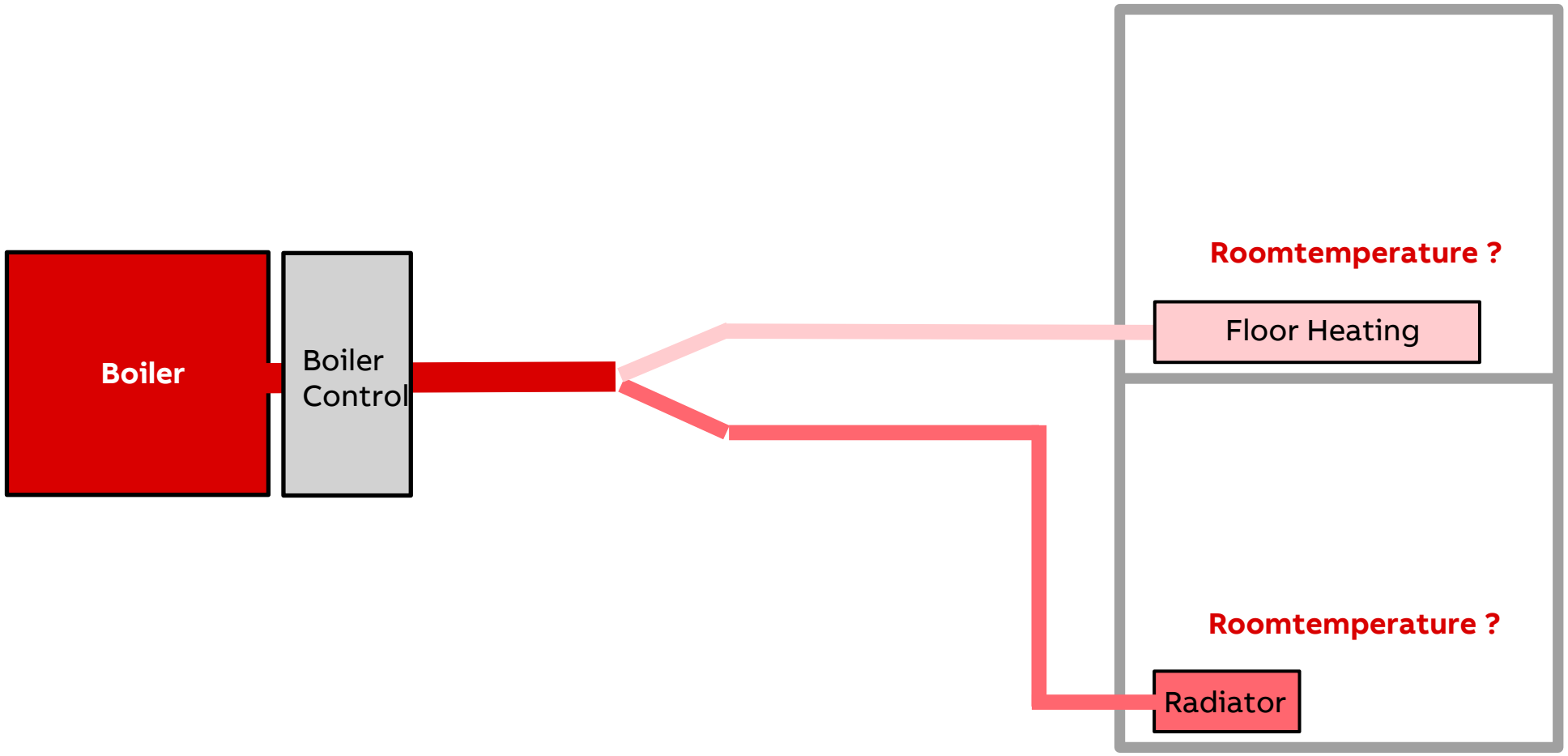
Boiler
Boiler Control
Roomtemperature ?
Floor Heating
Roomtemperature ?
Radiator

©ABB

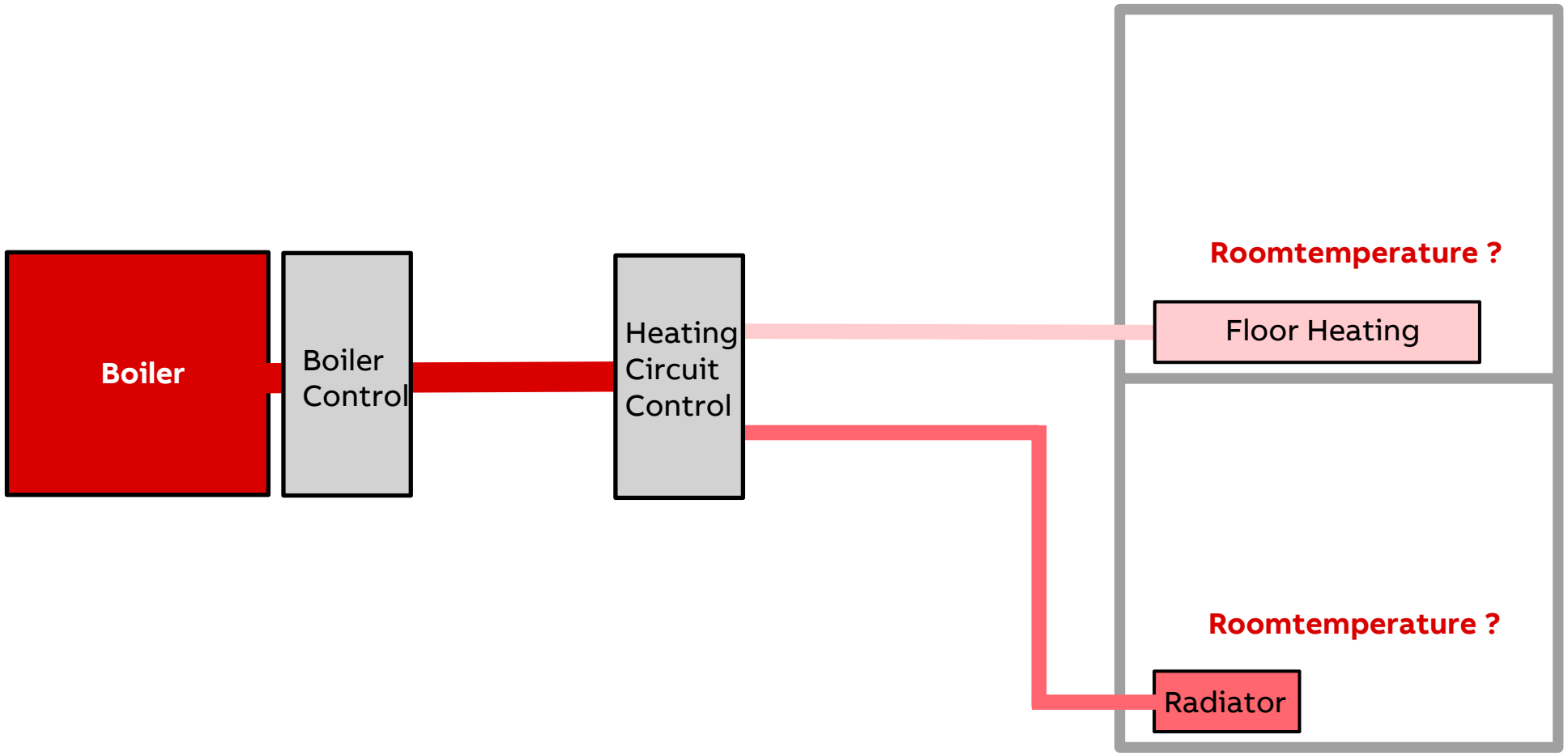
Boiler
Boiler Control
Heating Circuit Control
Roomtemperature ?
Floor Heating
Roomtemperature ?
Radiator

©ABB

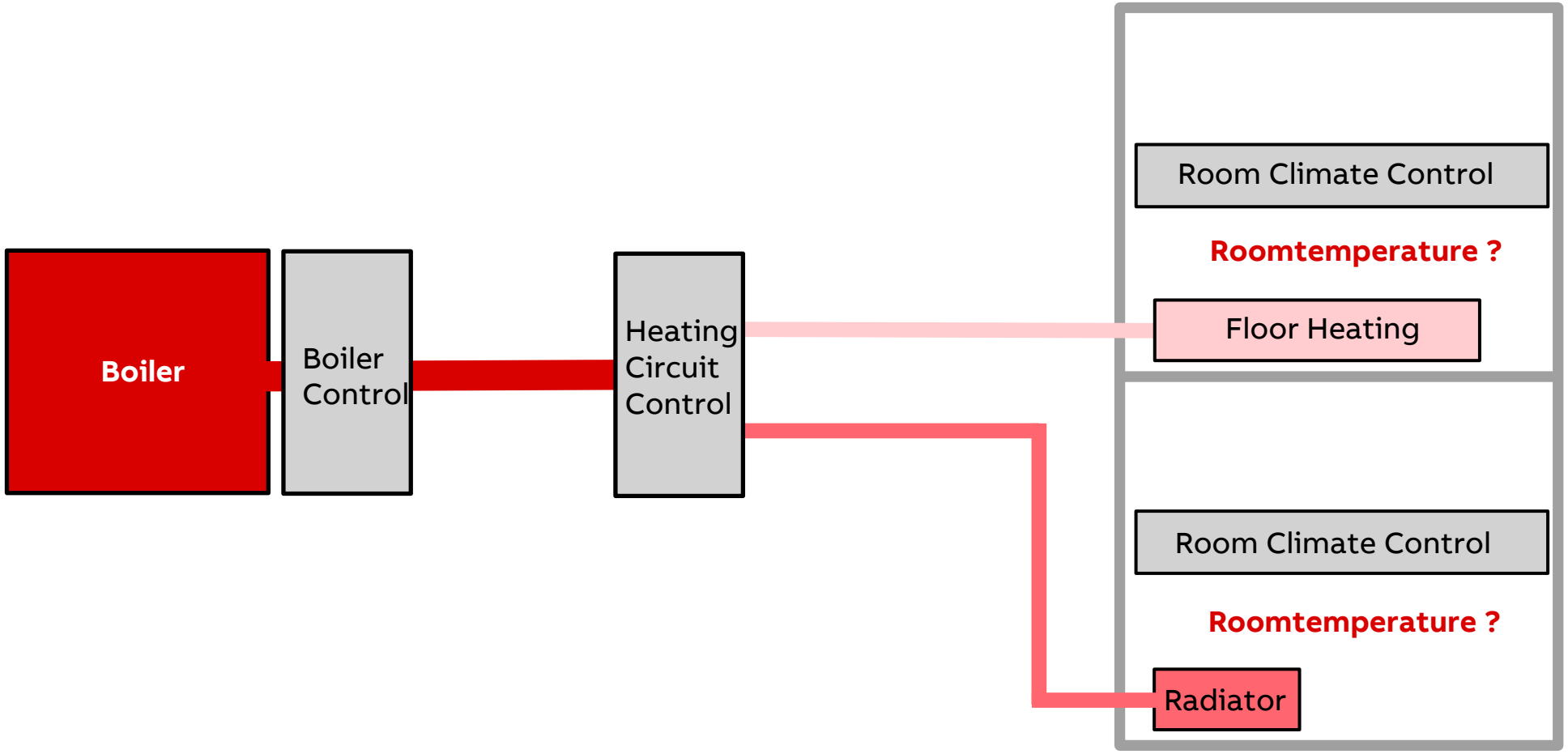
Boiler
Boiler Control
Heating Circuit Control
Room Climate Control
Roomtemperature ?
Floor Heating
Room Climate Control
Roomtemperature ?
Radiator

©ABB

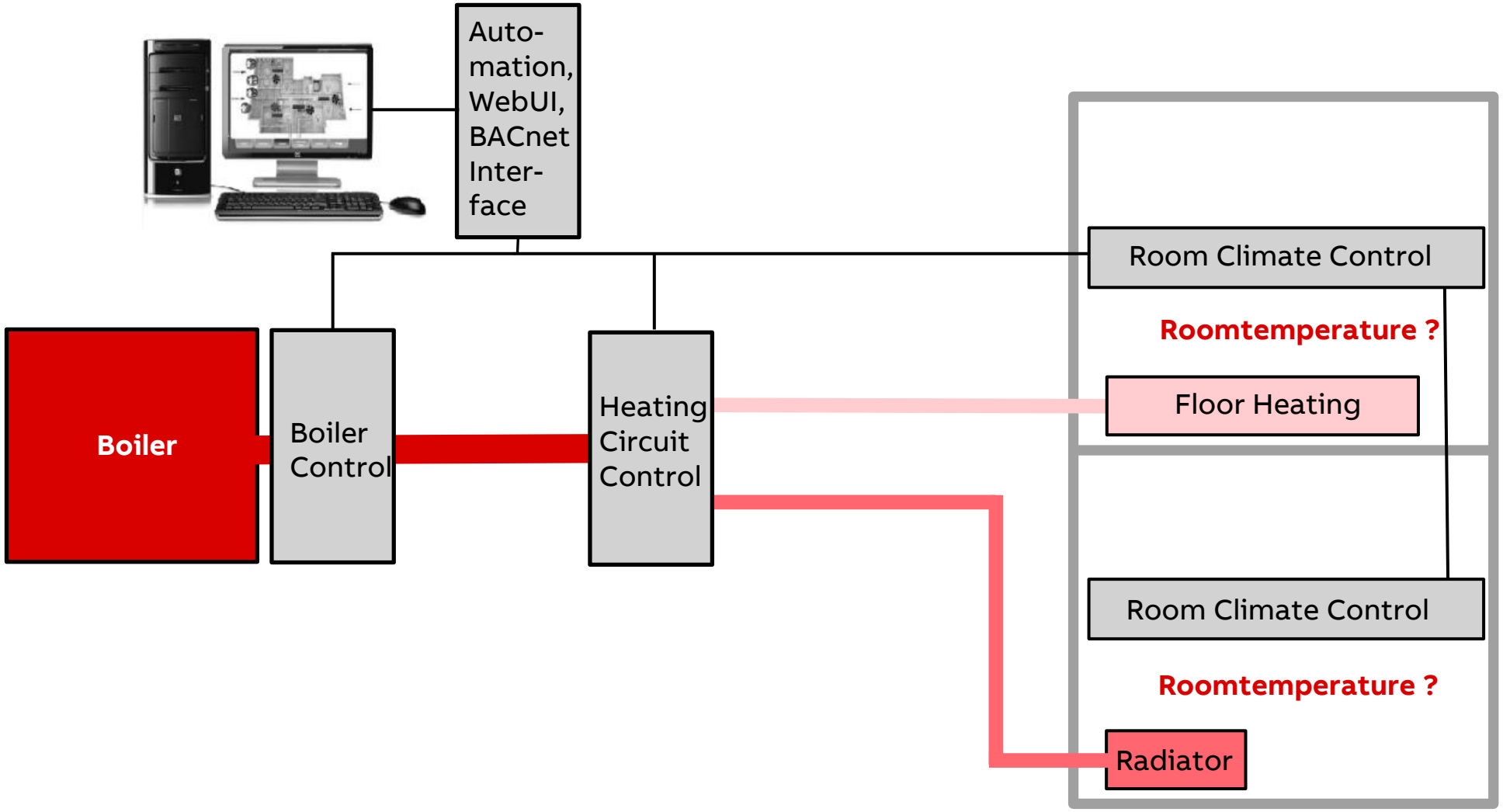
Auto-
mation,
WebUI,
BACnet
Inter-
face
Boiler
Boiler
Control
Heating
Circuit
Control
Room Climate Control
Roomtemperature ?
Floor Heating
Room Climate Control
Roomtemperature ?
Radiator

©ABB

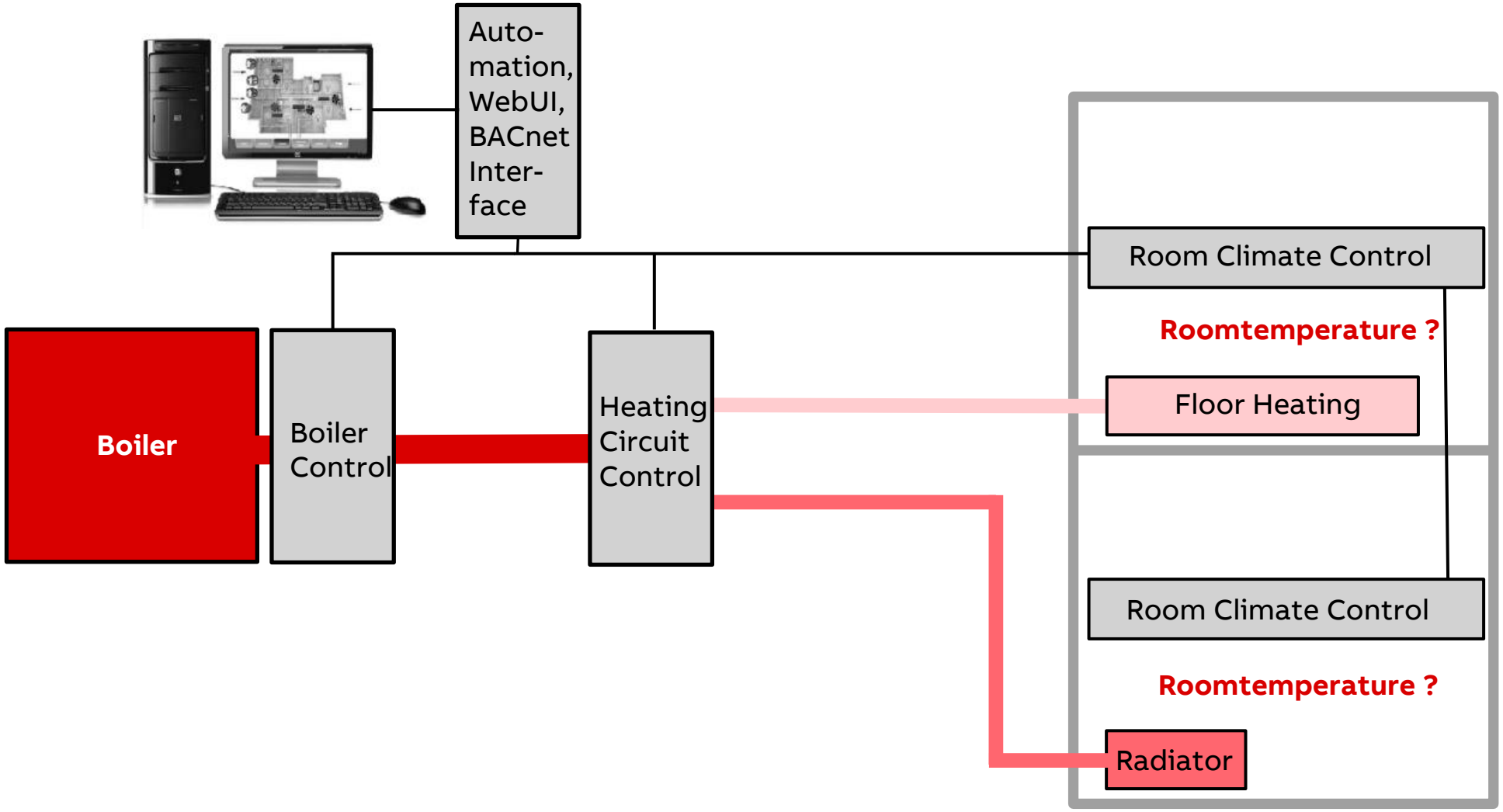
Auto-
mation,
WebUI,
BACnet
Inter-
face
Boiler
Boiler
Control
Heating
Circuit
Control
Room Climate Control
Roomtemperature ?
Floor Heating
Room Climate Control
Roomtemperature ?
Radiator

©ABB

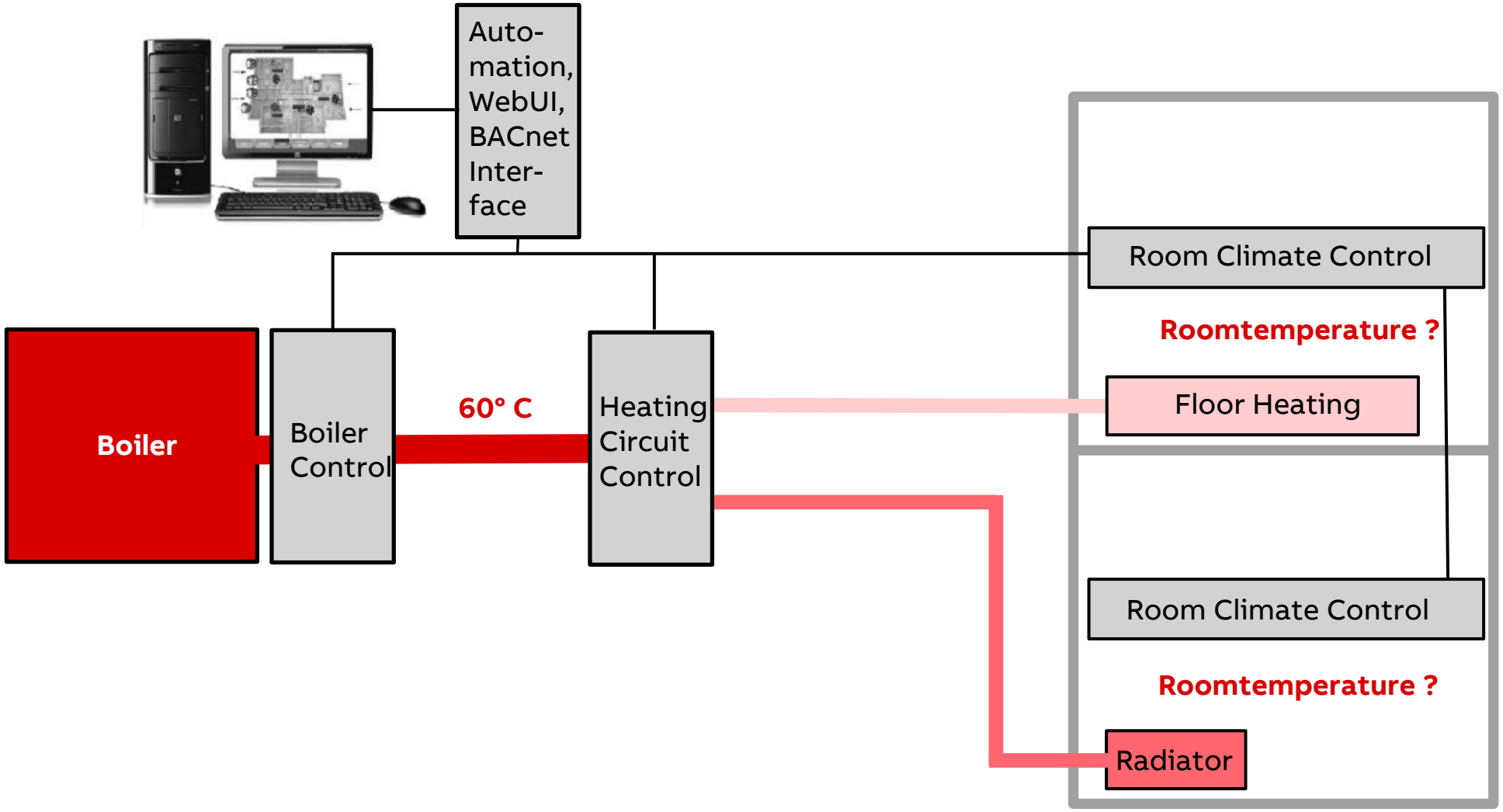
Auto-
mation,
WebUI,
BACnet
Inter-
face
Boiler
Boiler
Control
60° C
Heating
Circuit
Control
Room Climate Control
Roomtemperature ?
Floor Heating
Room Climate Control
Roomtemperature ?
Radiator

©ABB

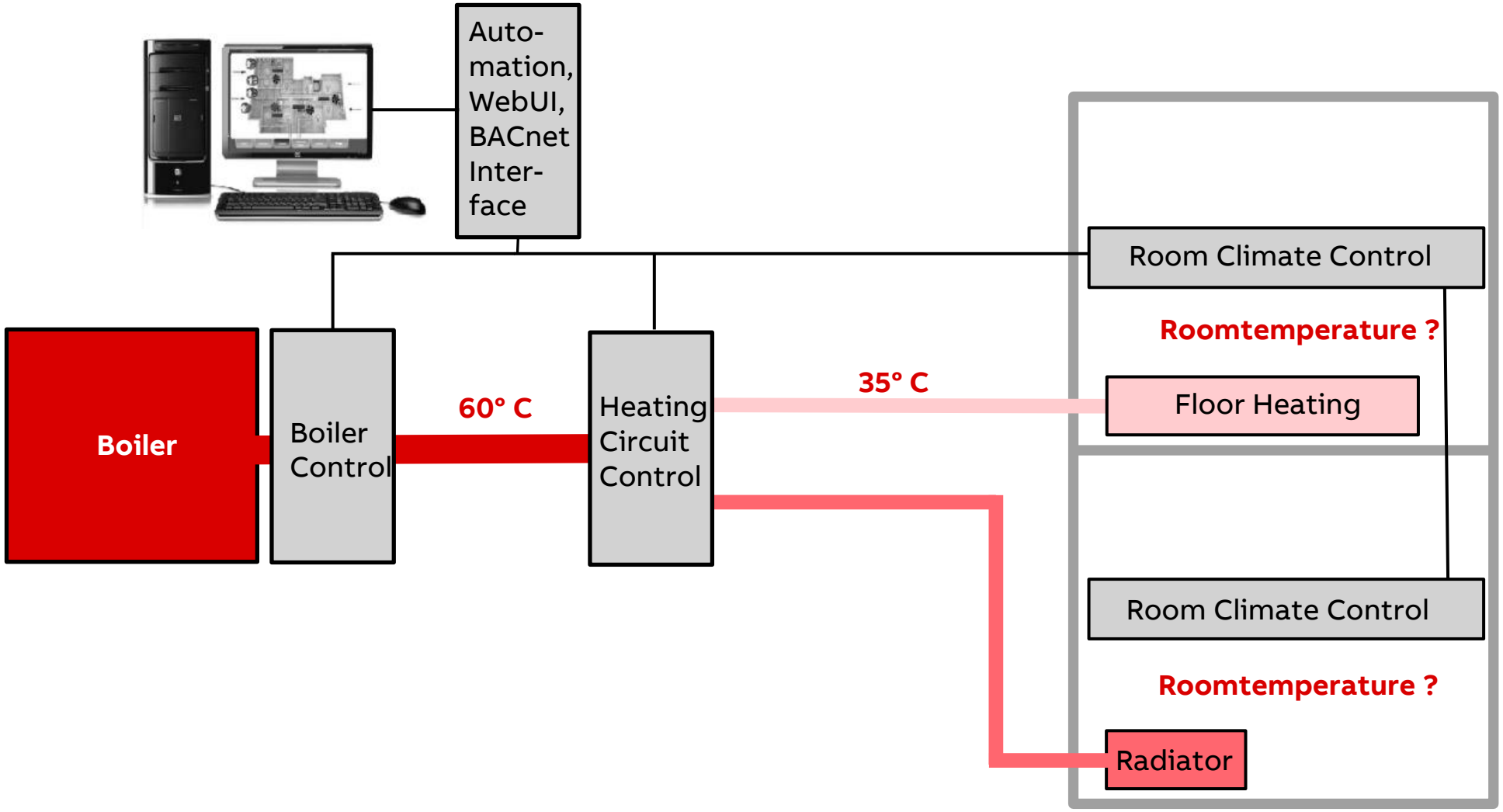
Auto-
mation,
WebUI,
BACnet
Inter-
face
Boiler
Boiler
Control
60° C
Heating
Circuit
Control
35° C
Room Climate Control
Roomtemperature ?
Floor Heating
Room Climate Control
Roomtemperature ?
Radiator

©ABB

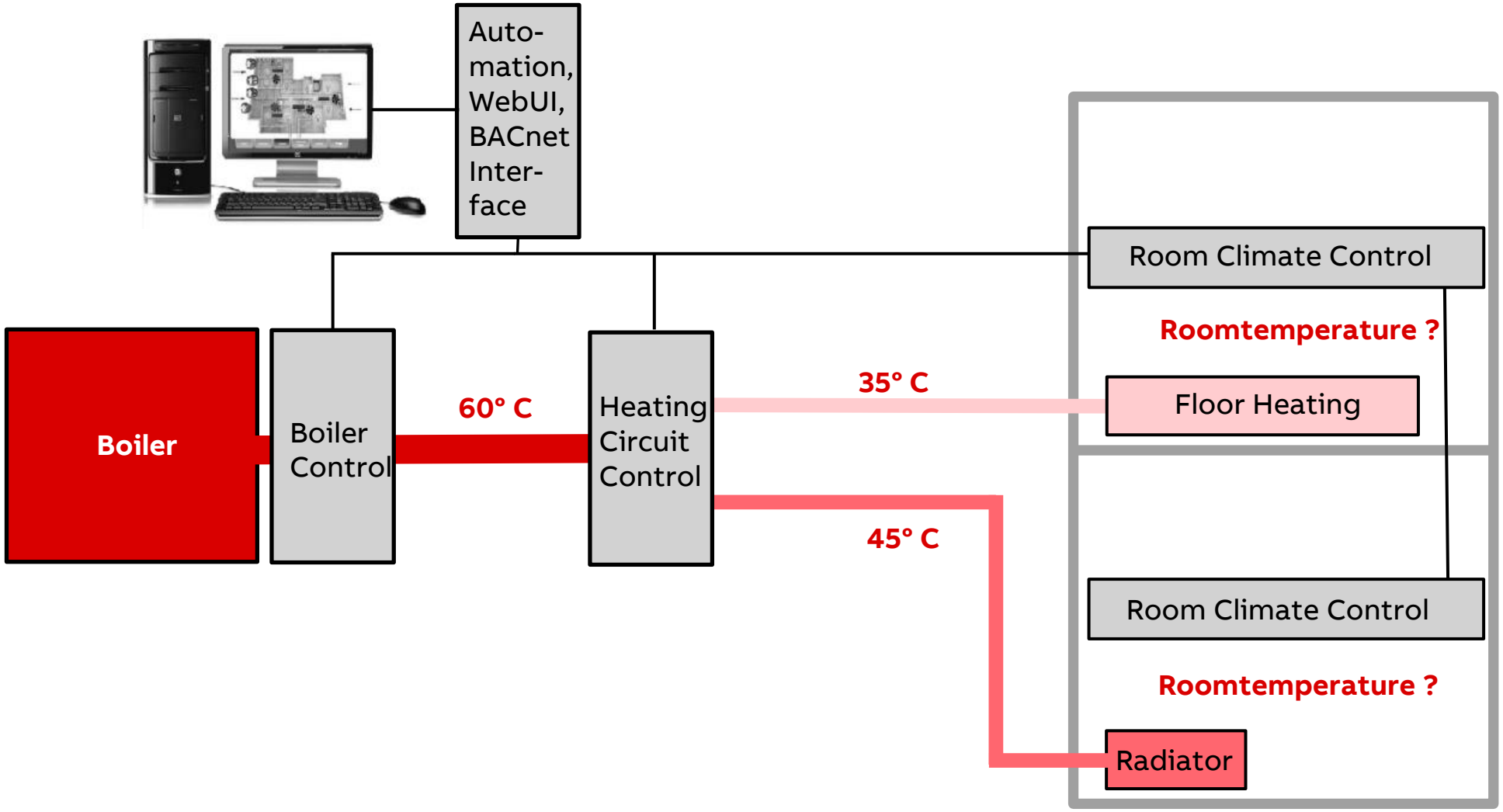
Auto-
mation,
WebUI,
BACnet
Inter-
face
Boiler
Boiler
Control
60° C
Heating
Circuit
Control
35° C
45° C
Room Climate Control
Roomtemperature ?
Floor Heating
Room Climate Control
Roomtemperature ?
Radiator

©ABB

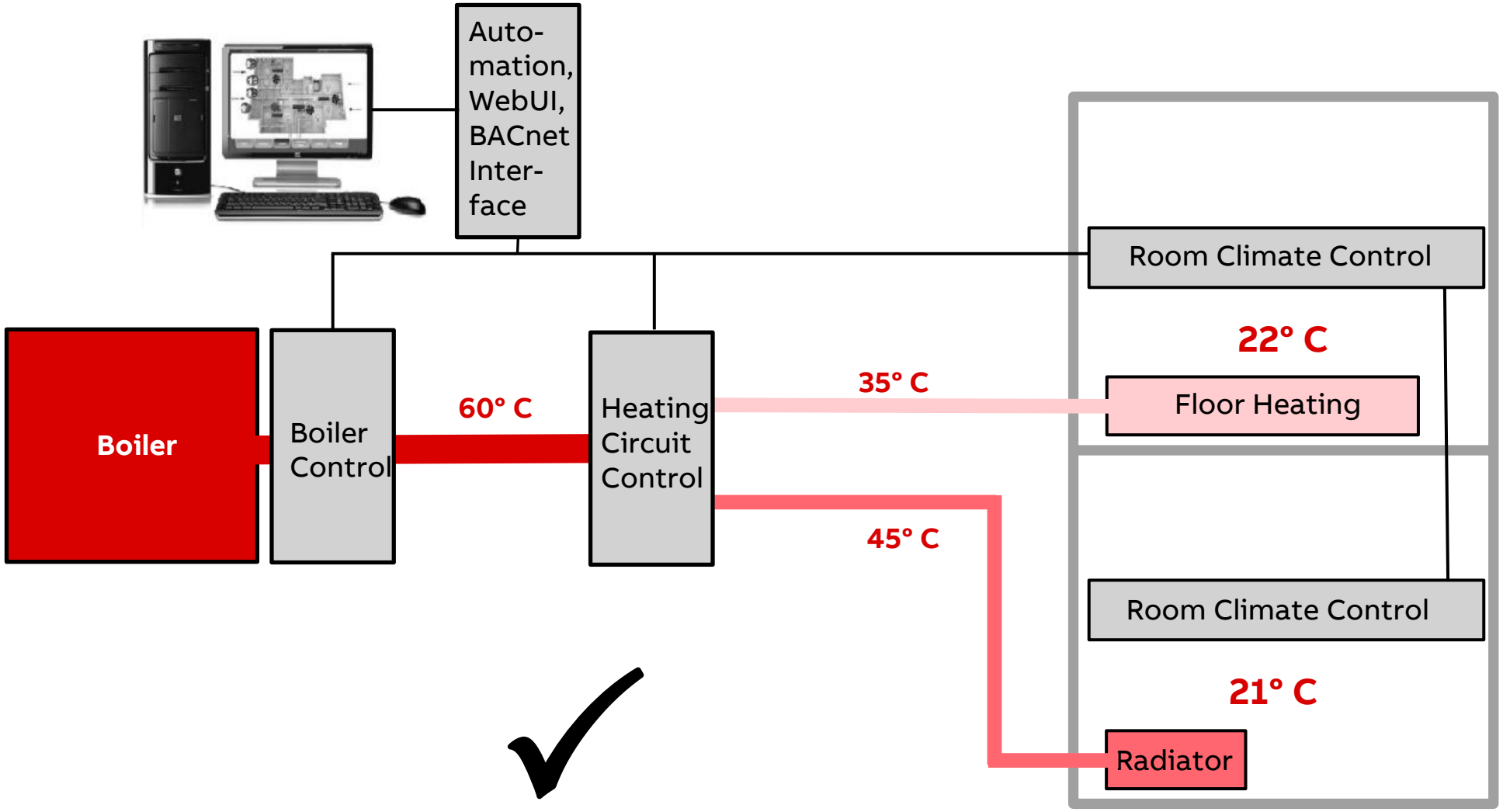
Auto-
mation,
WebUI,
BACnet
Inter-
face
Boiler
Boiler
Control
60° C
Heating
Circuit
Control
35° C
45° C
Room Climate Control
22° C
Floor Heating
Room Climate Control
21° C
Radiator

©ABB

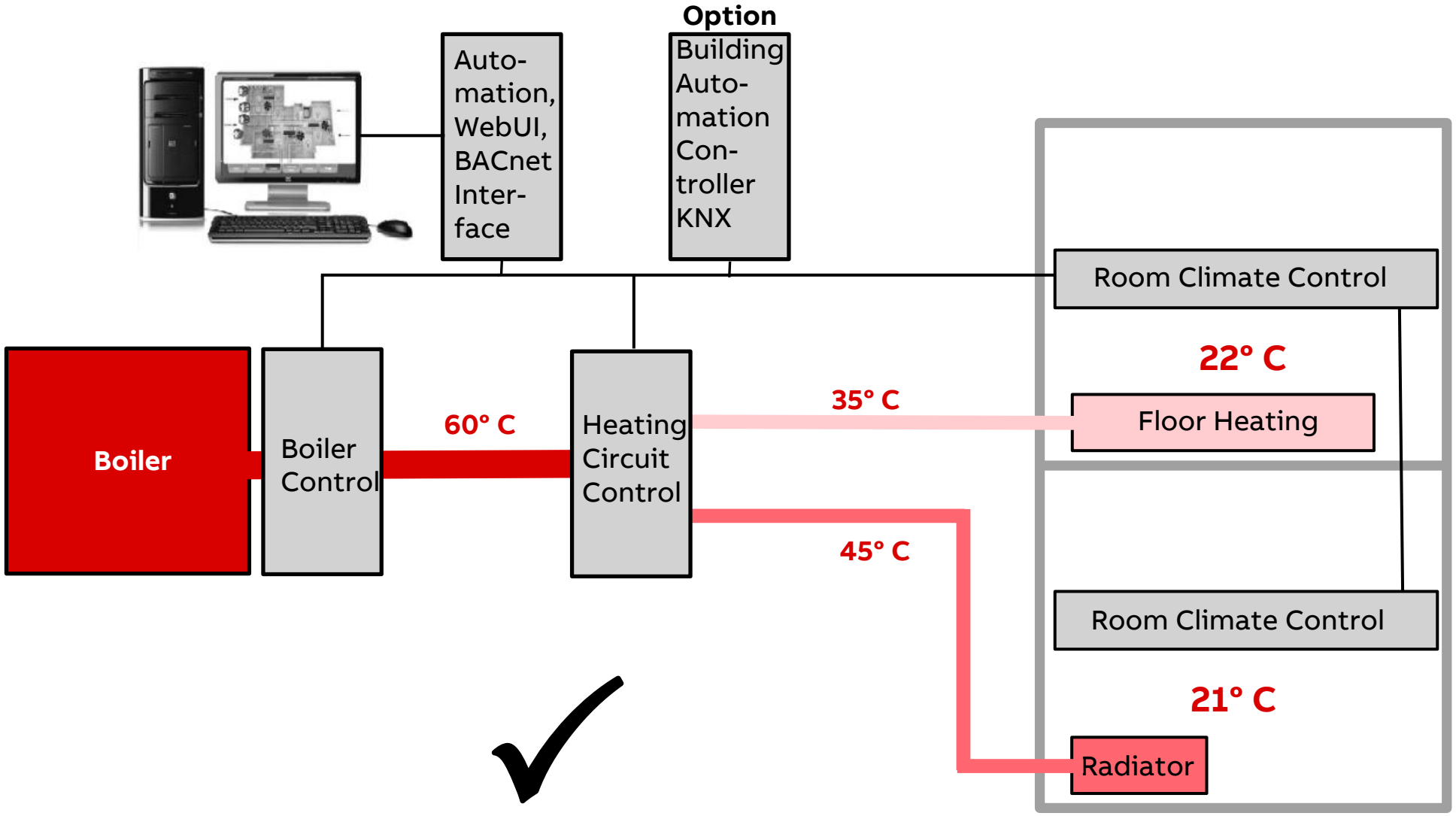
Option
Auto-
mation,
WebUI,
BACnet
Inter-
face
Building
Auto-
mation
Con-
troller
KNX
Room Climate Control
22° C
Floor Heating
35° C
Boiler
Boiler
Control
60° C
Heating
Circuit
Control
45° C
Room Climate Control
21° C
Radiator

Cooling with ClimaECO

...

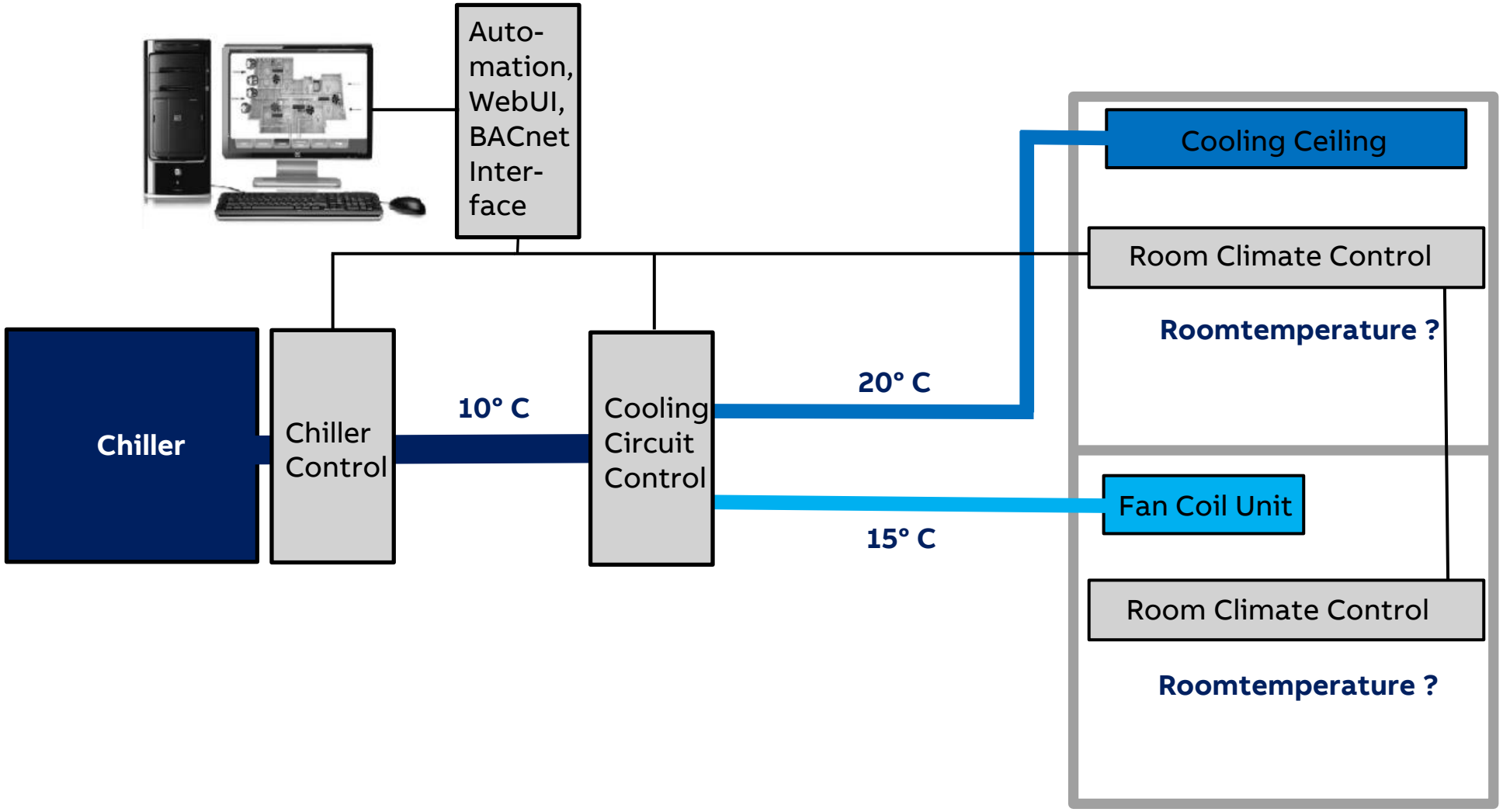
Auto-
mation,
WebUI,
BACnet
Inter-
face
Cooling Ceiling
Room Climate Control
Roomtemperature ?
Chiller
Chiller
Control
10° C
Cooling
Circuit
Control
20° C
Fan Coil Unit
15° C
Room Climate Control
Roomtemperature ?

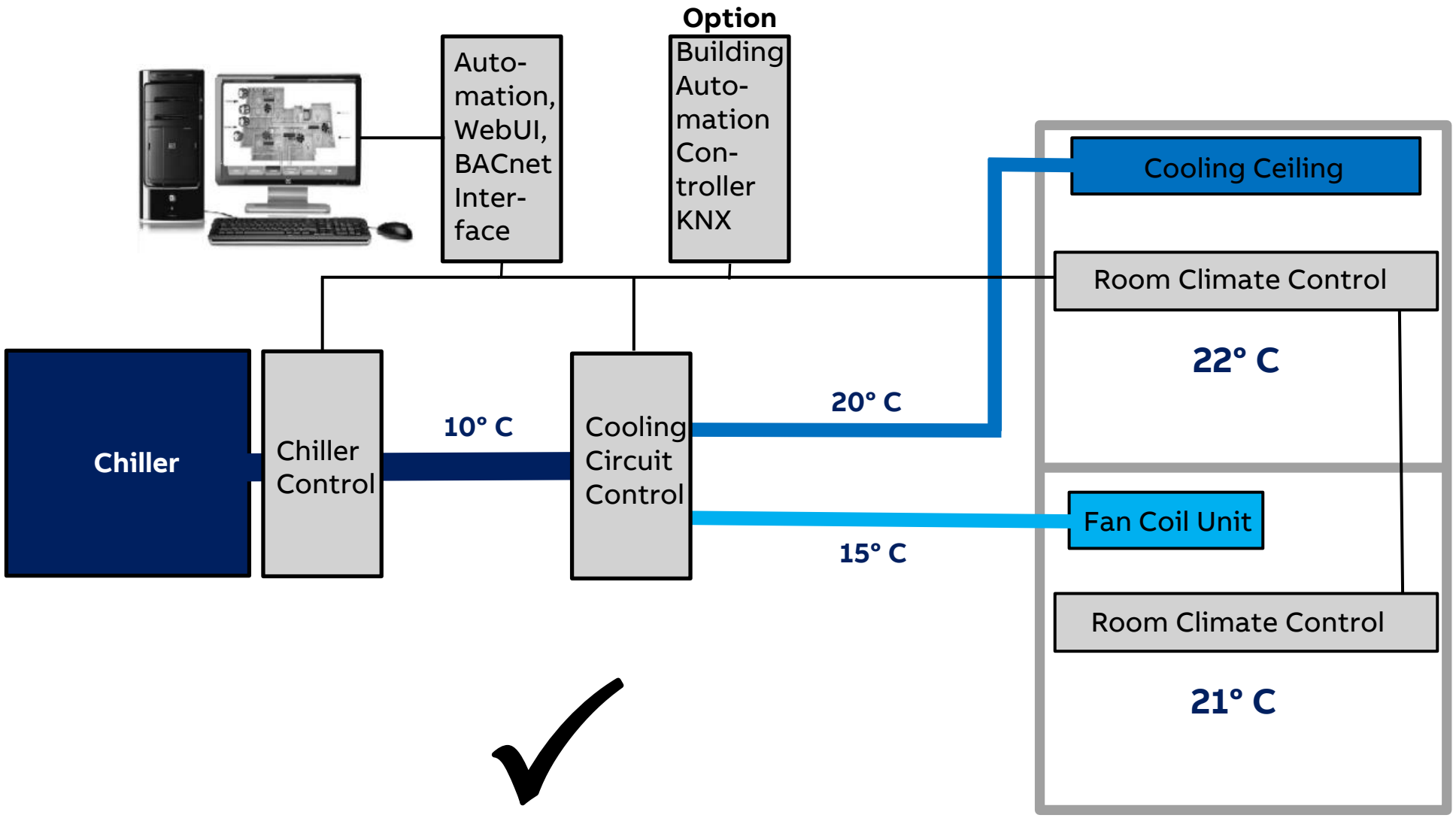
Option
Auto-
mation,
WebUI,
BACnet
Inter-
face
Building
Auto-
mation
Con-
troller
KNX
Cooling Ceiling
Room Climate Control
22° C
Chiller
Chiller
Control
10° C
Cooling
Circuit
Control
20° C
Fan Coil Unit
15° C
Room Climate Control
21° C

©ABB

ClimaECO ...

Heating and Cooling

from Generation

via Distribution

to Consumption

with Interface to BACnet and Web

optional Building Automation Controller KNX (PLC)

for High End Solutions

efficient, precise, flexible

and …

©ABB

consistently based on

©ABB

supplied by

ClimaECO: ABB i-bus® KNX HVAC Solutions

What is ClimaECO?

ClimaECO is our campaign to **highlight** our **HVAC Solutions** inside the **ABB i-bus® KNX** System.

Our ClimaECO offering consists of the **new developed Products** and the **established KNX HVAC range**.

The ClimaECO focuses now on **water based HVAC** and will be **extended** by **further Developments.**

ClimaECO: ABB i-bus® KNX HVAC Solutions

Customer Value Proposition

Room

Building

Room Solutions

A complete room automation solution for all types of commercial buildings

Building Solutions

A holistic automation solution for small to medium commercial buildings

System Integrator

Consultant

Building Operator

Investor / Owner

Sales Channel Harmony

ABB as a product solution supplier presents no channel conflict to its partners as compared to notable 'turn key' competitors

Secure Investment

ABB is a reliable partner especially for Investors and Building Owners as compared to the small / local supplier.

Solutions based purely on open and standardized technologies thus no single source and reducing system dependencies.

Cost Saving

During planning, integration, maintenance and by energy efficiency. Achievement of energy efficiency class A according to EN 15232 with up to 30 percent energy savings

ClimaECO: ABB i-bus® KNX HVAC Solutions

Customer Value Proposition

System Integrator

Consultant

Building Operator

Investor / Building Owner

Consistent solution from Consumption to Generation

Customers expect as much as possible from one provider, both in software, hardware and service like consulting by ABB

Sophisticated Hardware

All necessary components from ABB made in Germany

Local Sales and worldwide Support

ABB as an international company with it’s impeccable reputation, proven in numerous projects at different locations all over the world, can give the necessary assistance to implement HVAC solutions based upon ClimaECO from ABB

Building Automation

Positioning ClimaECO

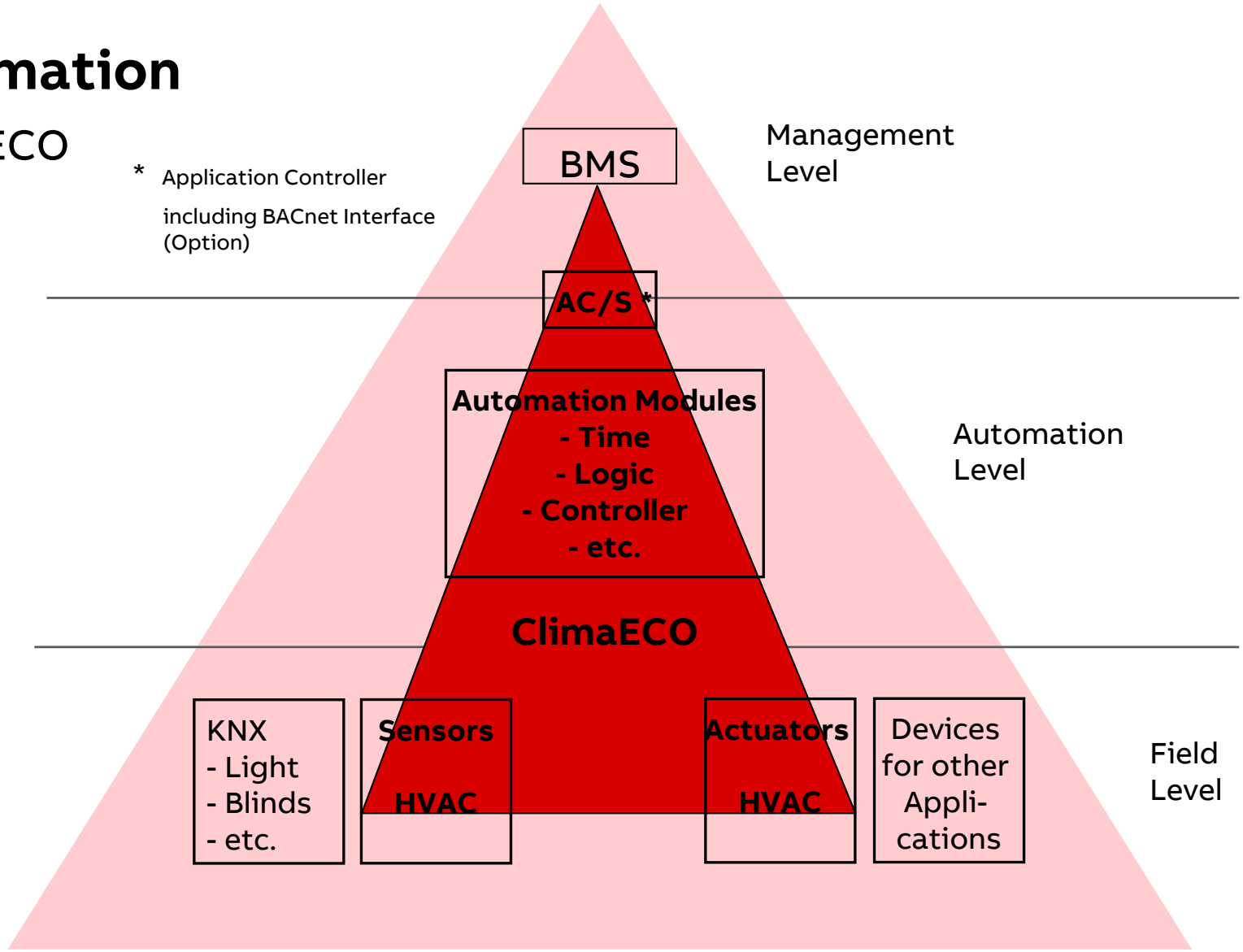

ClimaECO: ABB i-bus® KNX HVAC Solutions

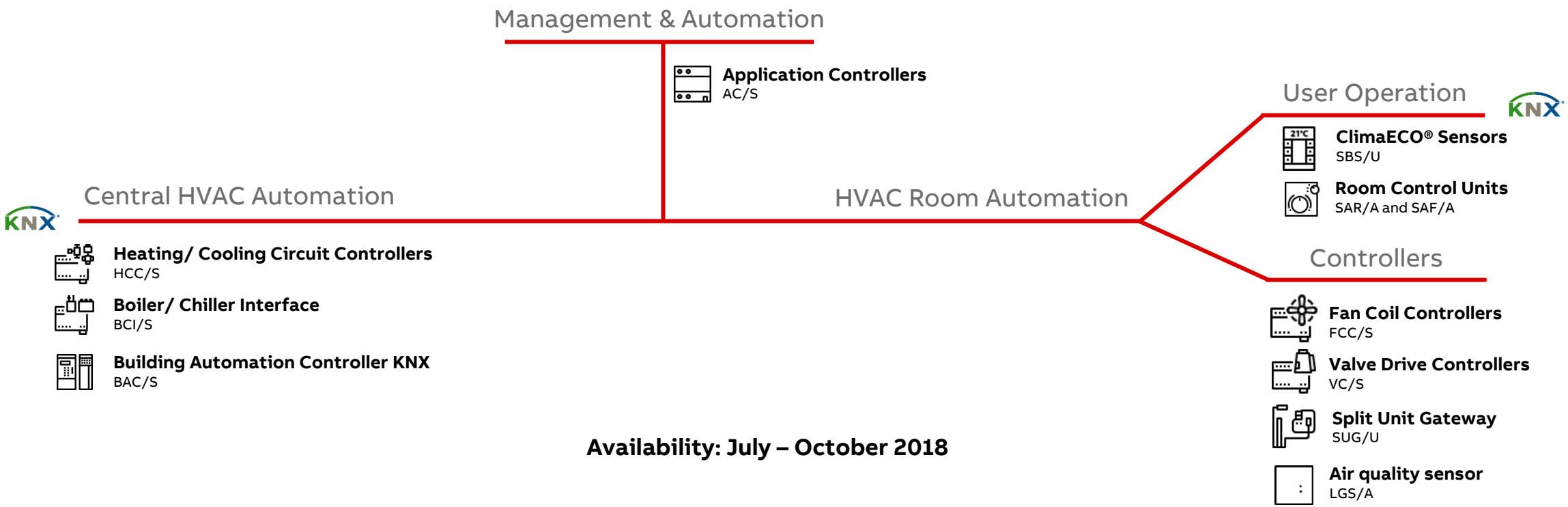

Availability: July – October 2018

A holistic HVAC Building Automation System, over 30 new devices

ClimaECO: ABB i-bus® KNX HVAC Solutions

Principle Heating with Radiator

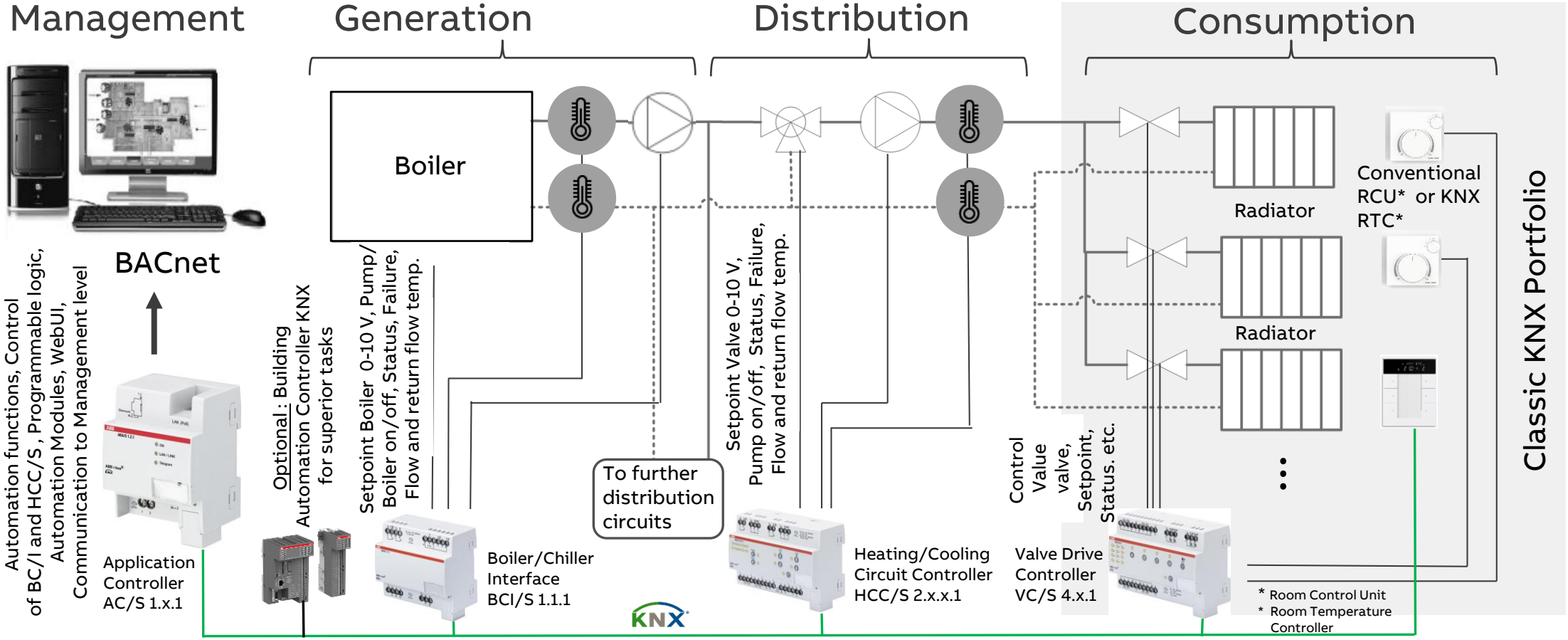

ClimaECO: ABB i-bus® KNX HVAC Solutions

Principle Cooling with Fan Coil Unit

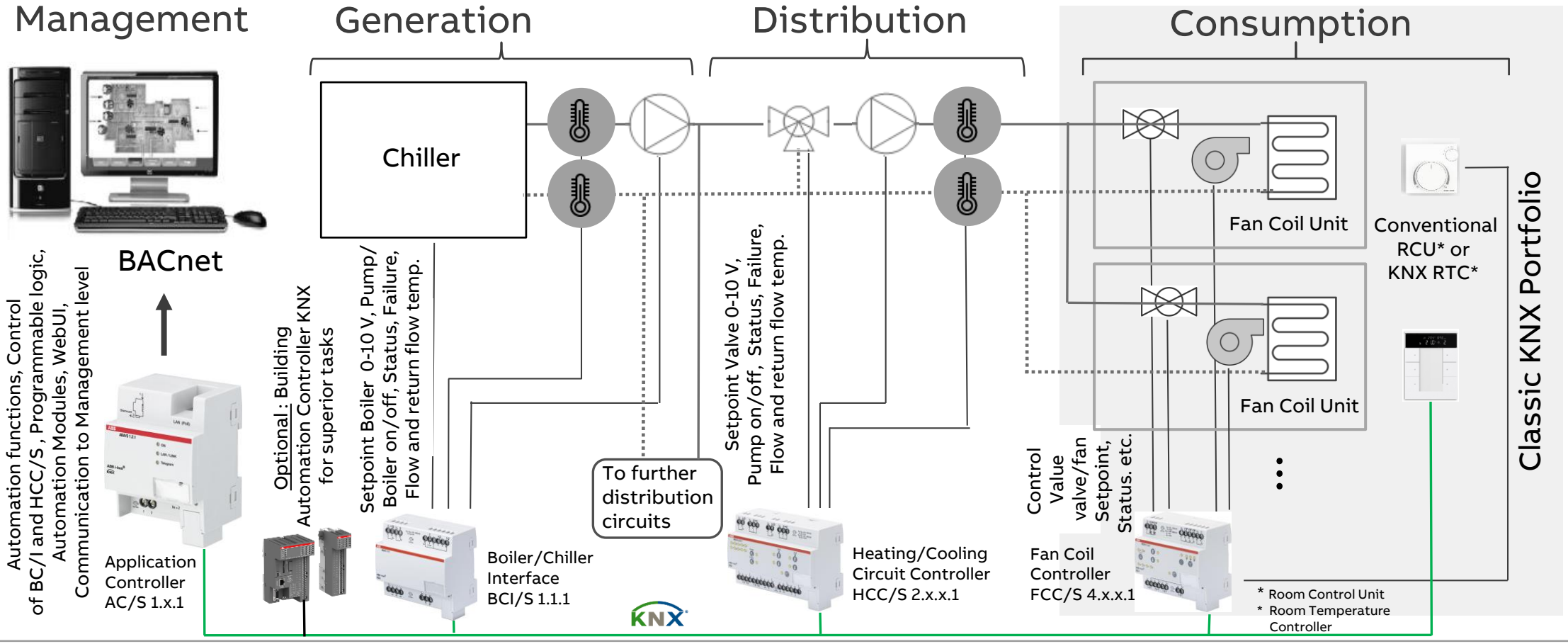

Fan Coil Controller FCC/S 1.x.x.1

Fan Coil Unit in principle

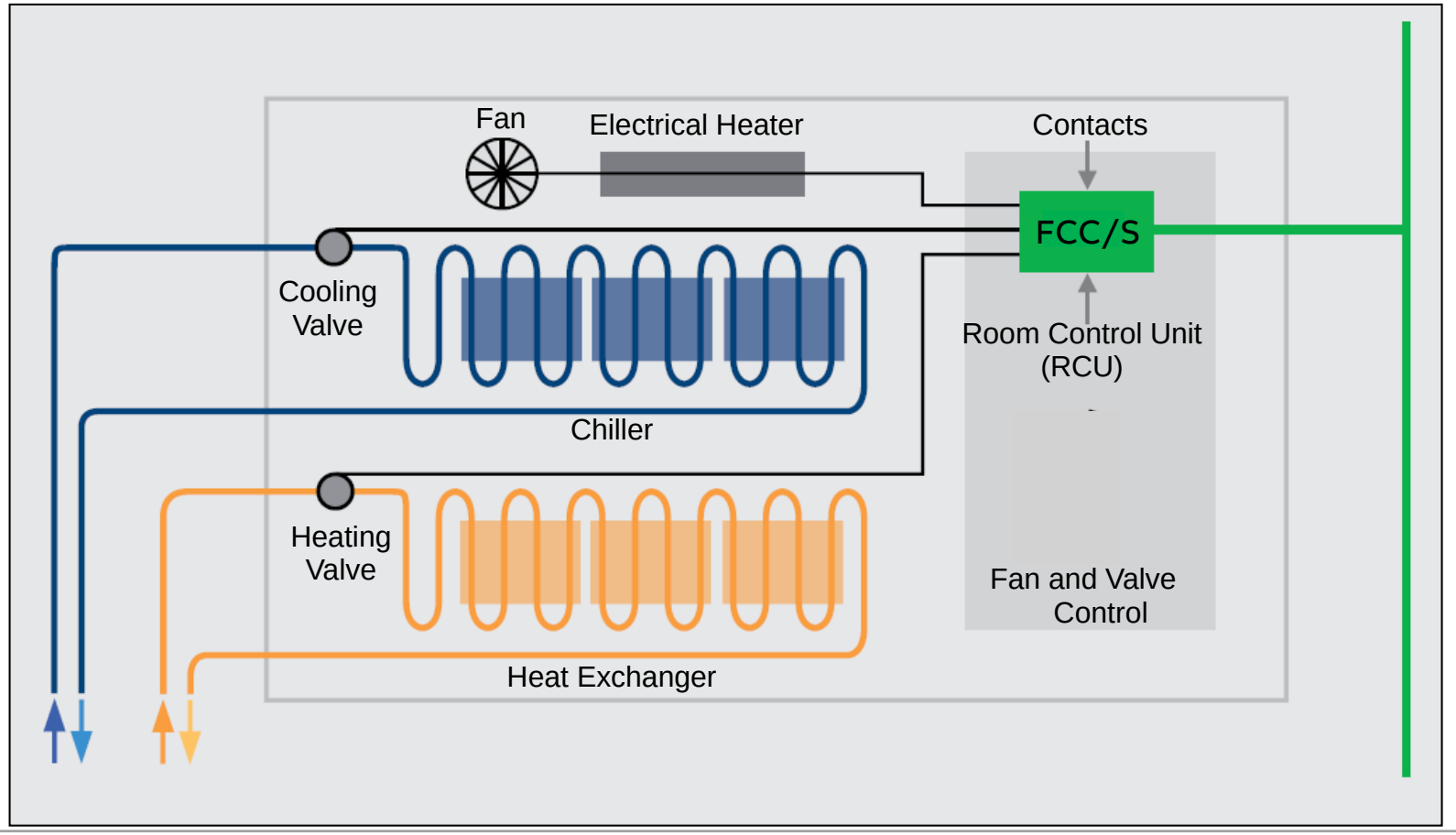

©ABB

Fan Coil Controller FCC/S 1.x.x.1

Introduction

Motivation – New Features

- Most comprehensive product family for controlling all kind of Fan Coil Units in the KNX market → 9 Components!
- Electrothermal and motor valve drives
  - 2 electronic outputs
- 0-10 V valve drives
  - 2 x 0-10 V outputs
- 1,2, or 3 step fan
- 0 - 10 V fan NEW
- All combinations of digital and analogue fan and valve control NEW
- Integrated room temperature controller for conventional Room Control Units (RCU) NEW

©ABB

Fan Coil Controller FCC/S 1.x.x.1

Introduction

Motivation – New Features

- Parametrizable as actuator or controller/actuator NEW
- With and without manual operation
- 4 inputs for digital and analogue signals (PT100, PT1000, KTY, NTC, NI 1000) and connection of conventional Room Control Unit (Setpoint and room temperature) NEW
- Control of 6-way valves NEW
- Control of VAV flaps (**V**ariable **A**ir **V**olume) NEW
- ABB i-bus tool support
- With and without manual operation
- Budget variant (FCC/S 1.4.1.1) with one valve output (2 step or PWM), no additional switch contact and no manual operation NEW
- Existing Fan Coil Actuators FCA/S will be replaced
- Availability: July 2018

©ABB

Fan Coil Controller FCC/S 1.x.x.1

Family FCC/S 1.x.x.1

FCC/S 1.1.1.1
3-step Fan, PWM 2-fold

FCC/S 1.1.2.1
3-step Fan, PWM 2-fold, man. Op.

FCC/S 1.2.1.1
3-step Fan, Valve 0-10 V

FCC/S 1.2.2.1
3-step Fan, Valve 0-10 V, man. Op.

FCC/S 1.4.1.1
3-step Fan, PWM **1-fold**
(no additional switch contact)

FCC/S 1.3.1.1
Fan 0-10 V, Valve 0-10 V

FCC/S 1.3.2.1
Fan 0-10 V, Valve 0-10 V, man. Op.

FCC/S 1.5.1.1
Fan 0-10 V, PWM 2-fold

FCC/S 1.5.2.1
Fan 0-10 V, PWM 2-fold, man. Op.

Fan Coil Controller FCC/S 1.x.x.1

Assignment Controller - Actuator

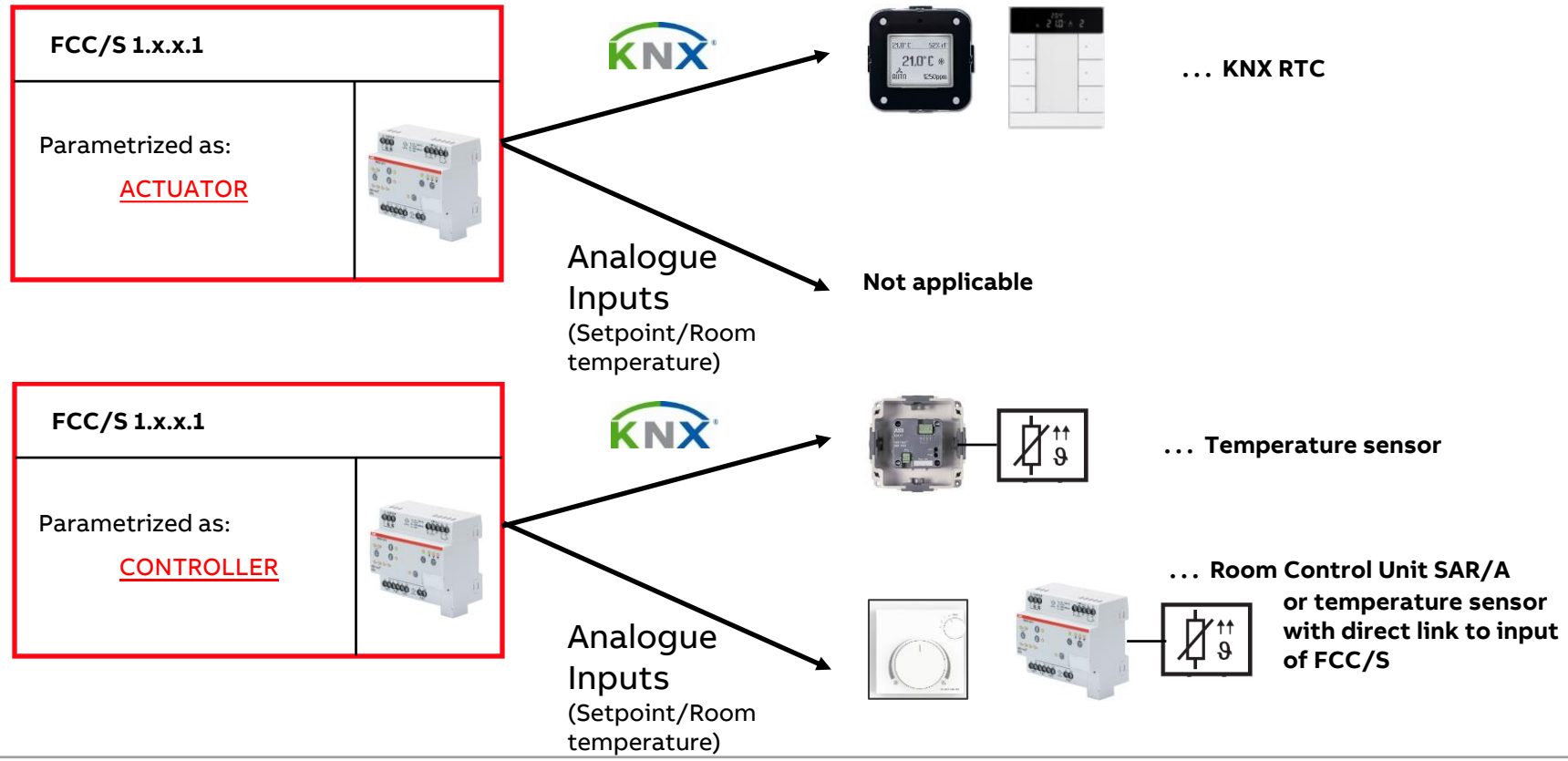

Valve Drive Controller VC/S 4.x.1

Valve control in principle

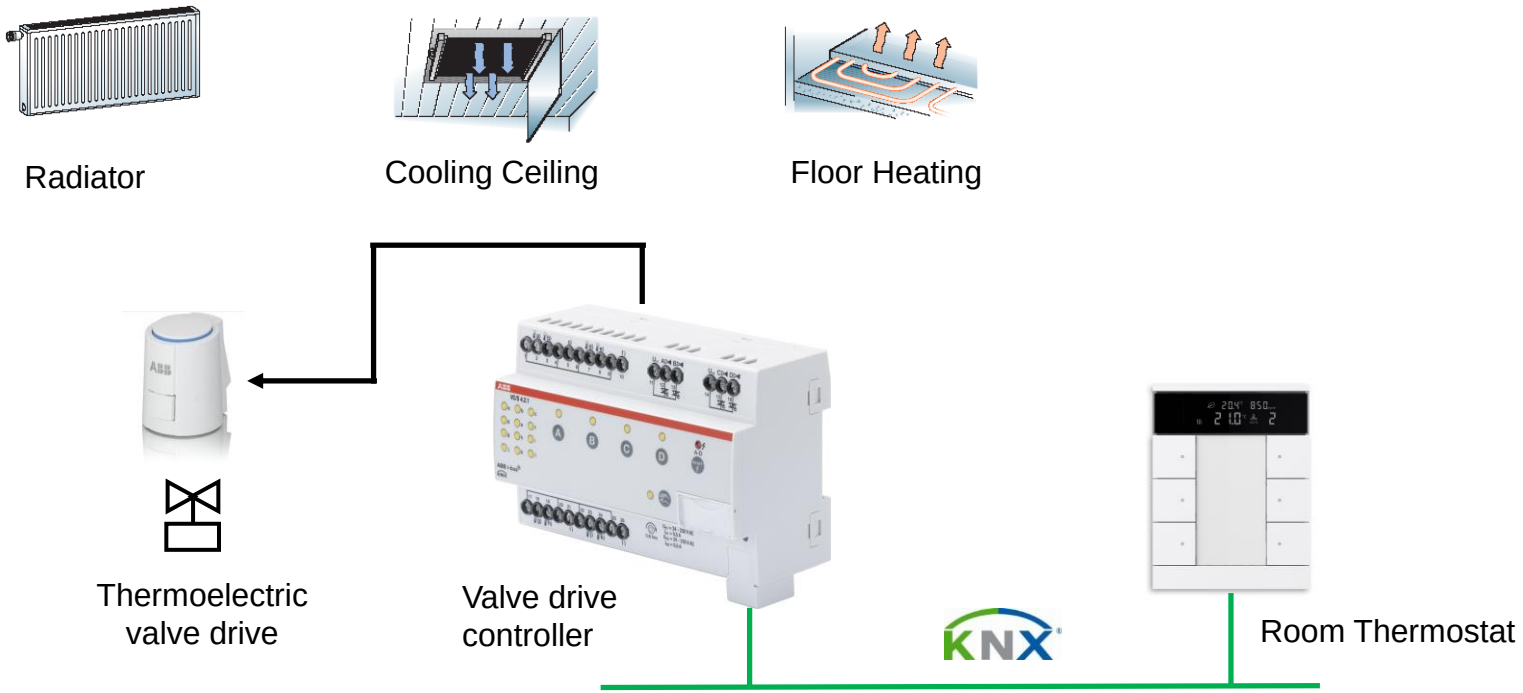

Valve Drive Controller VC/S 4.x.1

Introduction

Motivation – New Features

- Two devices with four channels for valve control
- Electrothermal valve drives with four channels
- With and without manual operation
- 12 inputs (digital and analogue, 3 each channel) for temperature measurement, dew point sensor, window contact, etc.
- Integrated room temperature controller for conventional Room Control Units (RCU) NEW
- Parametrizable as actuator or controller/actuator NEW
- Existing Valve Drive Actuators will be not replaced

- Availability: August 2018

Valve Drive Controller VC/S 4.x.1

Assignment Controller - Actuator

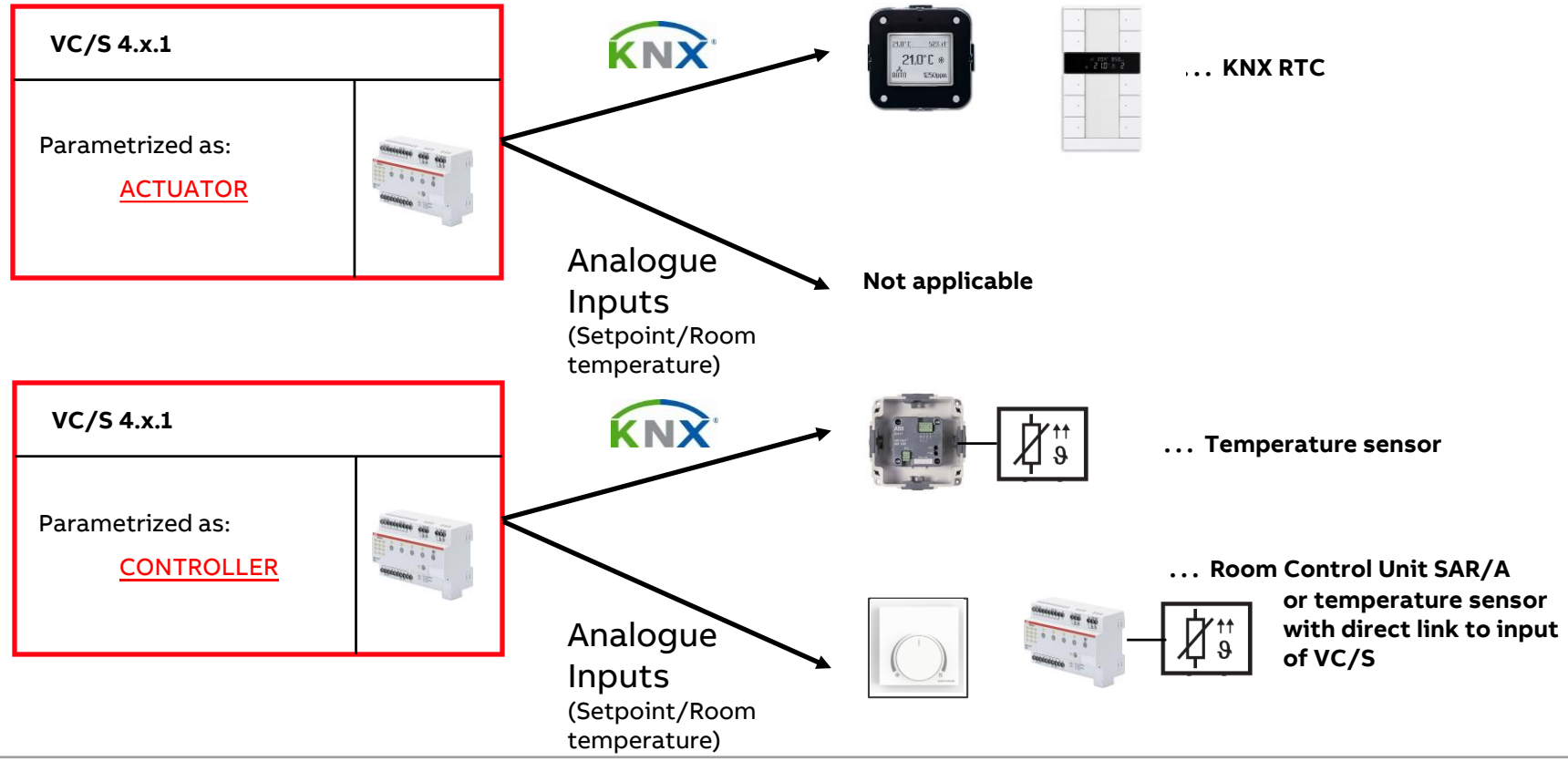

Room Control Unit SAR/A and SAF/A

Introduction

Motivation – Features

- Conventional (non KNX!) operating element for room temperature control (RCU) NEW
- Works together with Controller in FCC/S or VC/S
- Lower in price
- to be competetive in projects with demands for this solution
- Simple and cost efficient user interface but powerful system behind
- Two devices:
  - SAR/A with set point control for radiators, floor heating and cooling ceiling
  - SAF/A with set point and fan speed control for fan coil units
- Integrated temperature sensor
- White color
- Surface mounted

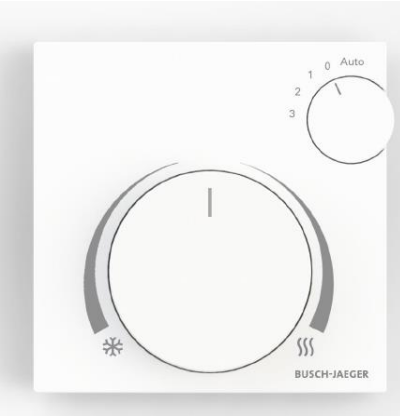

Room Control Unit SAR/A and SAF/A

Introduction

Example: Connection FCC/S

4 wires required

- 2 wires for setpoint input A (mandatory)
- 2 wires for room temperature
  - optional, can come also from another sensor, e.g. KNX presence detector
- Fan speed signal detection via different resistor levels on setpoint wires in addition to the resistance of the temperature sensor

- Availability: July 2018

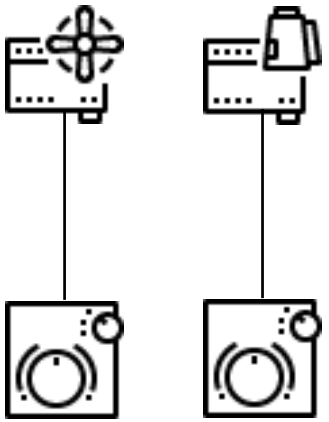

ClimaECO sensors

New Range of KNX sensors

Introduction

- New range of push button sensors and room temperature controller created together with the project ClimaECO
- Complete product range:
  - Control element 8-fold and 12-fold with integrated temperature sensor
  - Control element with RTC slave 6- and 10-fold
  - Control element with RTC 6- and 10-fold
  - Control element with RTC 6- and 10-fold plus CO_2 and humidity sensor and controller
- User friendly with an good User Interface-design for the devices with display
- Labelling with icons and/or text via an web-tool by the customer himself
- All devices with an mechanical anti theft protection

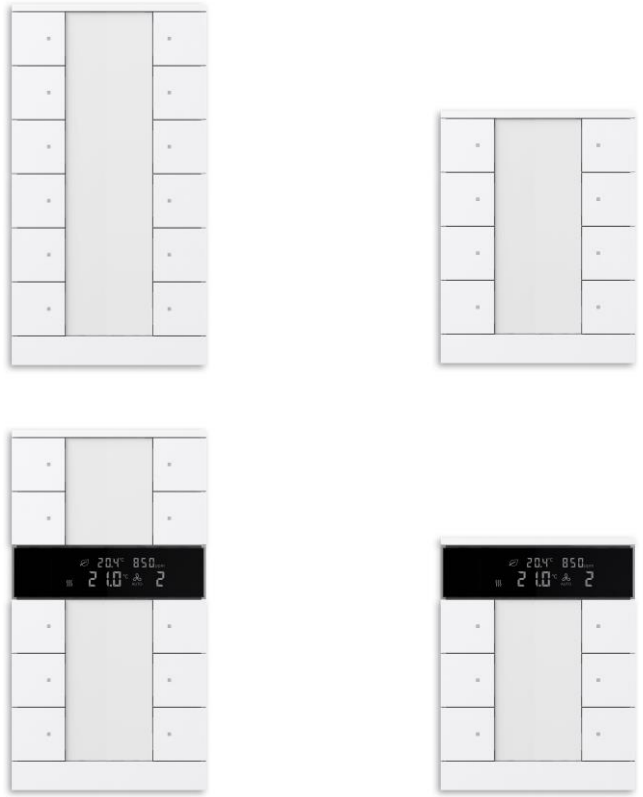

©ABB

ClimaECO sensors

New Range of KNX sensors

Introduction

- Installation in every country in the world (VDE, BS, NEMA, Australian brackets, etc.)
- Sensors can be installed/mounted in a flush mounted box or separate surface mounted box
- Unified RTC concept
- Available in studio white (-84)
- Native ETS application for ETS4 and ETS5
- Values and icons are shown on a white illuminated display
- Status LED‘s with day and night mode
- Status LED‘s with ABB color concept
- No frame required

- Availability: August 2018

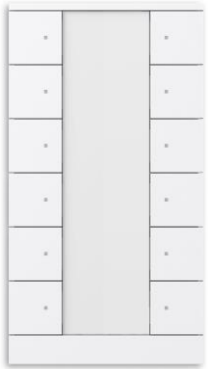

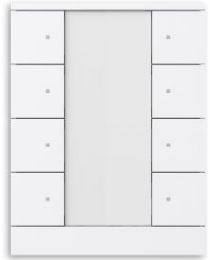

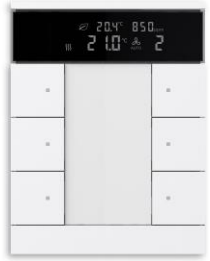

Heating Cooling Circuit Controller HCC/S 2.x.x.1

Introduction

Why Heating Cooling Circuits in a HVAC System?

In a heating/cooling system the hot/cold water has to be distributed to various units in a building.

Units can be separate flats in a residential building, individual departments/shops in a commercial building, particular circuits for radiator or floor heating/cooling ceiling and more

Requirements of these units: individual consumption and measurement, different water temperature and pressure, turn off of the circuit (pump off and valve closed) and more

A Heating Cooling circuit Controller together with the valve, pump and temperature sensors can handle these requirements

→ For a holistic approach HCC/S 2.x.x.1 from ABB based on KNX

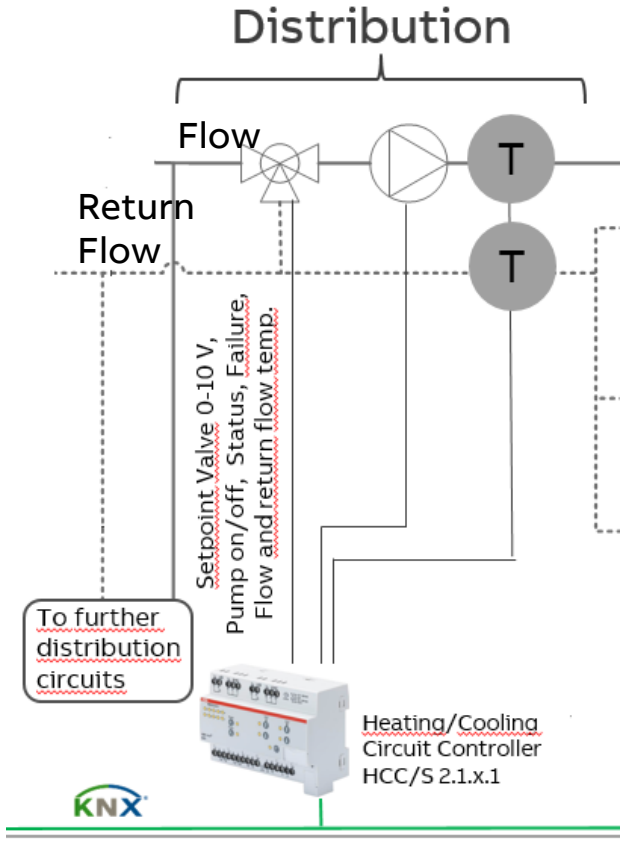

Heating Cooling Circuit Controller HCC/S 2.x.x.1

Introduction

Motivation – New Features

- Control of Heating/Cooling Circuits NEW
- Control of mixing valve/3-way valve:
  - 0 - 10 V motor
  - 3 point motor
- Control of single/double pump of the heating cooling circuit
- 2 Channels
- Measurement of flow- and return flow temperature
- Binary inputs for status information of the pump

- Availability: August 2018

Boiler/Chiller Interface BCI/S 1.1.1

Introduction

Why Boiler/Chiller in a HVAC System?

In a heating/cooling system hot/cold water has to be generated with the right amount and temperature to be distributed to various circuits/units in a building.

A boiler or chiller produces the tempered water but has to be controlled depending on the demand of the total heating/cooling system

→ For a holistic approach Boiler Chiller Interface BCI/S 1.1.1 from ABB based on KNX

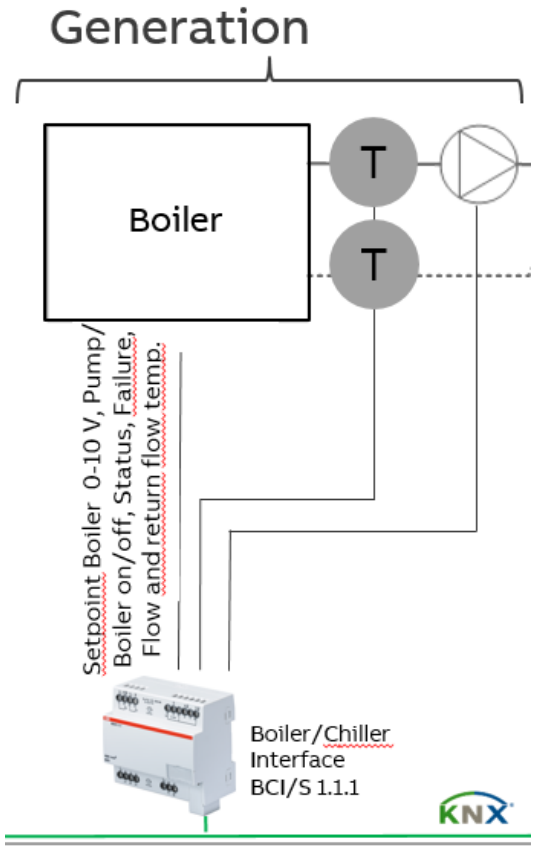

Boiler/Chiller Interface BCI/S 1.1.1

Introduction

Motivation – New Features

- Control of a Boiler/Chiller and the main pump NEW
- Control of necessary water temperature (set point) in the boiler/chiller via 0-10V
- Turn on/off of boiler/chiller
- Turn on/off of pump of the main heating/cooling circuit
- Measurement of flow- and return flow temperature
- No controller inside, it‘s an interface, therefore no interference with the internal safety mechanism of the boiler or chiller unit
- The main intelligence (especially to provide the right control value) is located in the Application Controller AC/S (ASM‘s Boiler Heat generator and Chiller)

- Availability: August 2018

Application Controller AC/S 1.x.1

Introduction

Why Application Controller in a HVAC System?

In a heating/cooling system a superior intelligent unit is required for numerous tasks

Functions like controller capability, collecting and processing data, mathematical functions, interfacing, calculation of control values or displaying and setting of states via web browser belong to it

Device needs connection to KNX and Ethernet, but has no physical In- and Outputs

As in many HVAC systems BACnet is used, therefore an optional BACnet interface is essential

→ For a holistic approach AC/S 1.x.1 with or without BACnet interface from ABB based on KNX

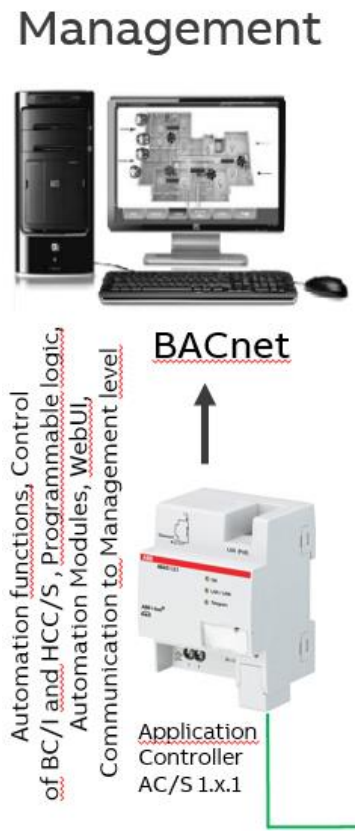

Application Controller AC/S 1.x.1

Principle

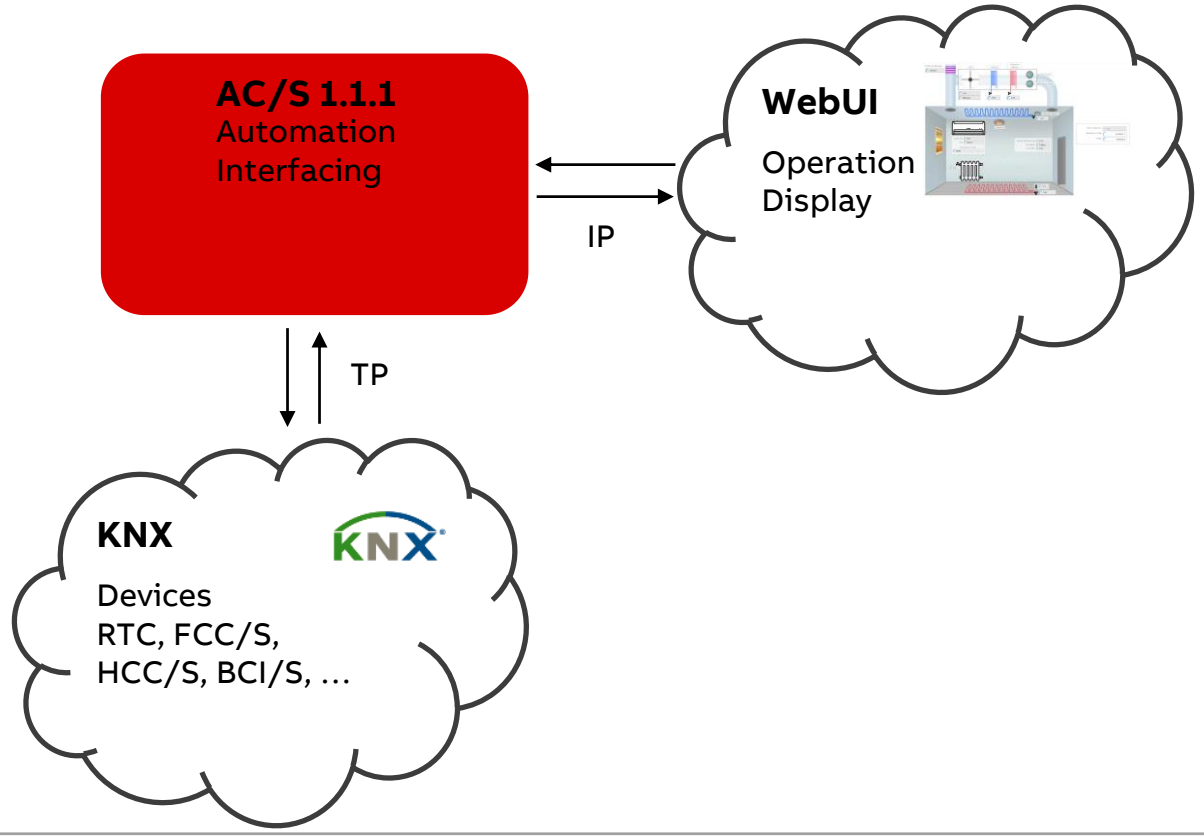

Application Controller AC/S 1.x.1

Principle

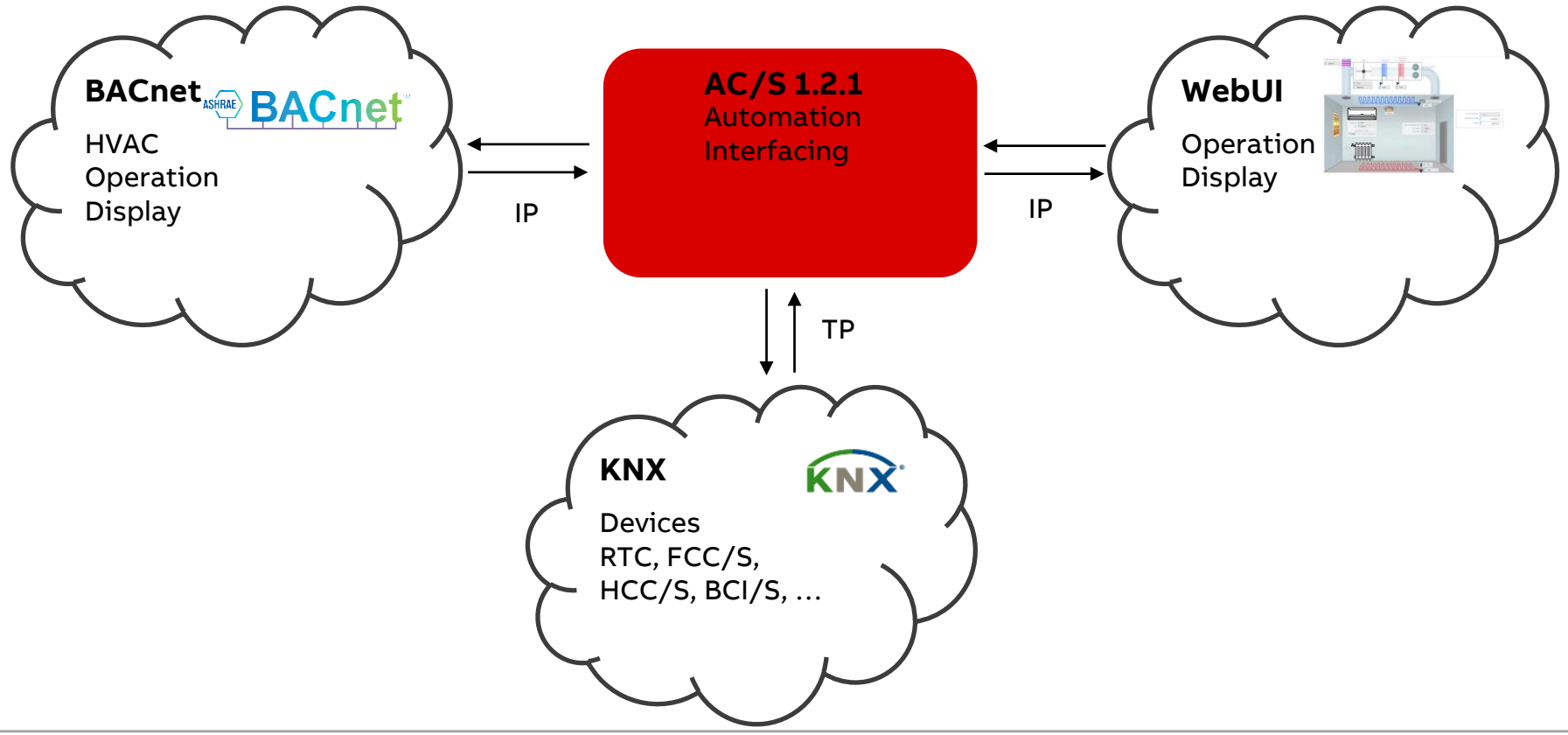

Application Controller AC/S 1.x.1

Introduction

Motivation – New Features

- Control of the complete HVAC system from consumption to generation
- Managing the boiler/chiller
- Managing the Heating/Cooling circuit control
- Necessary for for a consistent solution of a HVAC system completly with ABB i-bus KNX which is demanded from customers and in projects

- Availability: September 2018

Application Controller AC/S 1.x.1

Introduction

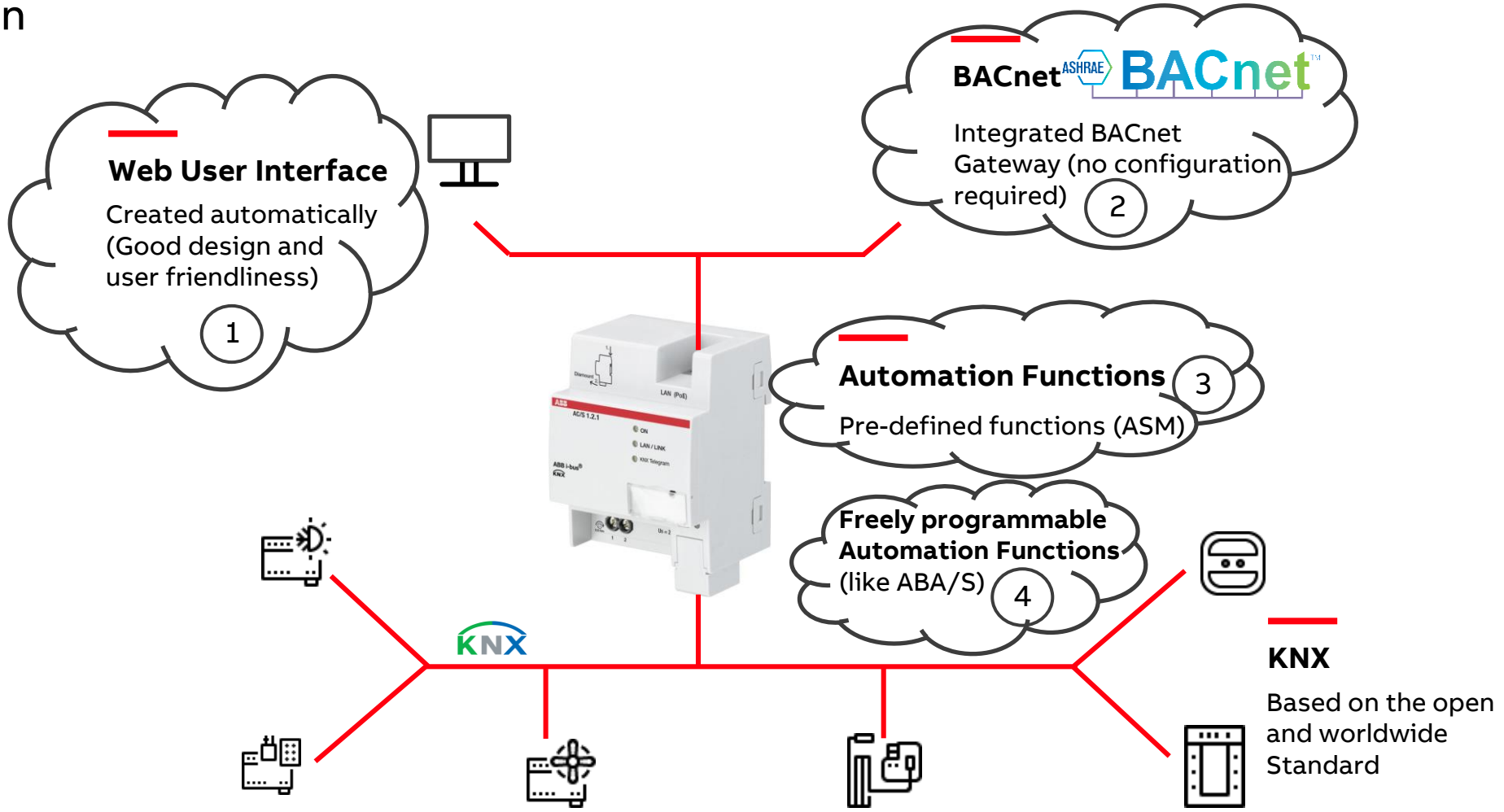

ClimaECO

Application Controller and WebUI

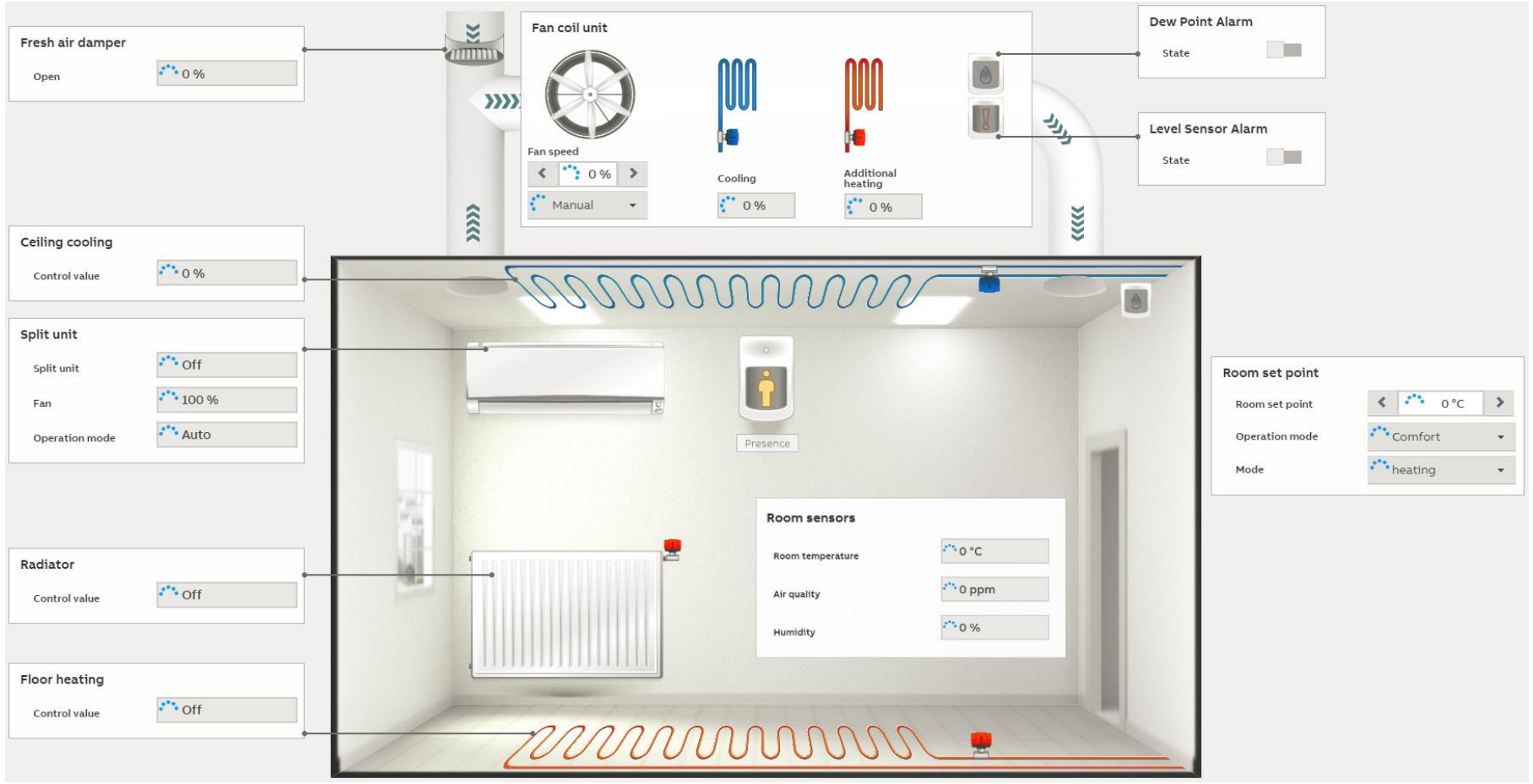

Application Controller AC/S 1.x.1

Introduction

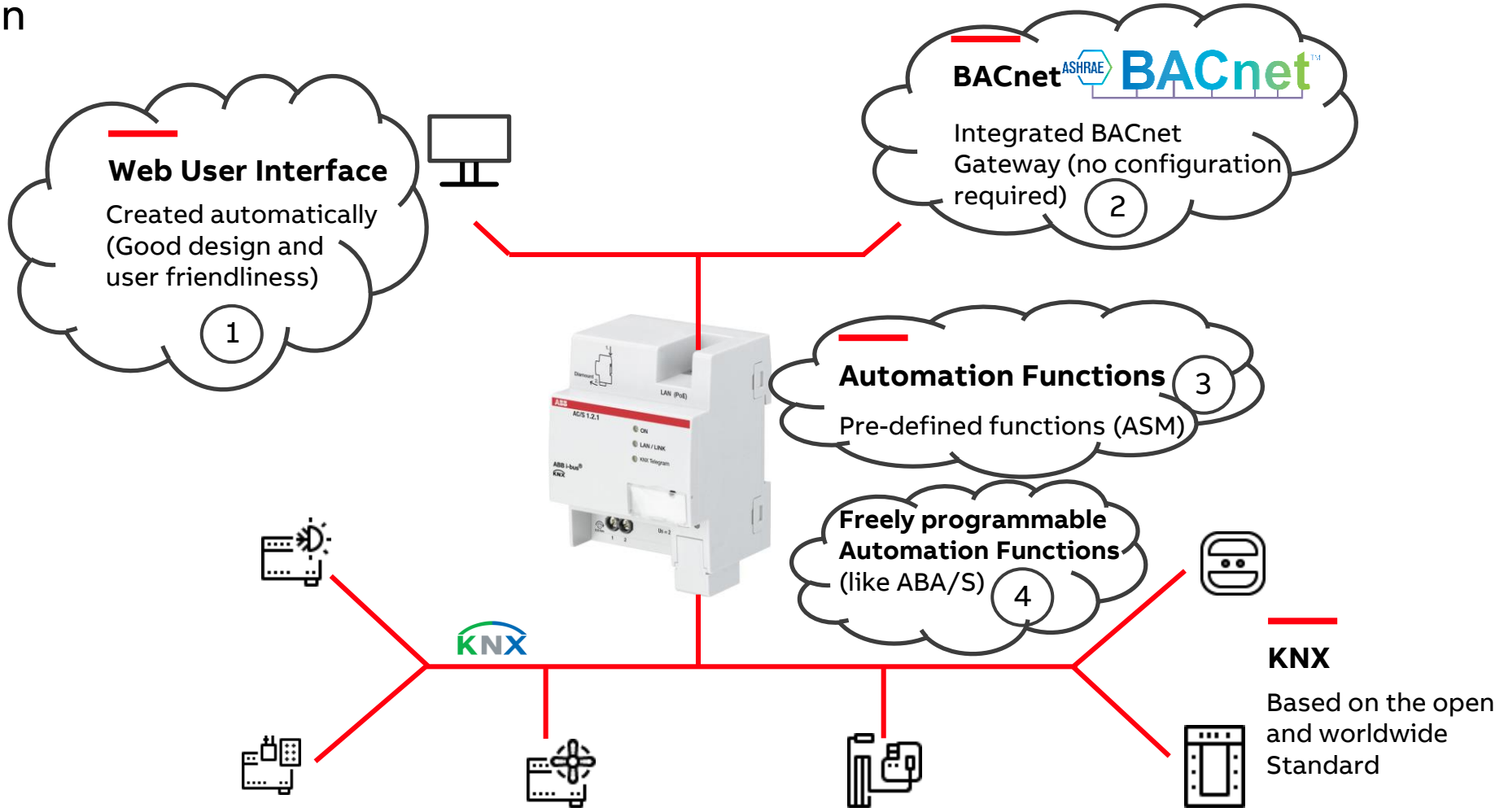

Application Controller AC/S 1.x.1

Communication in all Directions → KNX - WebUI - BACnet

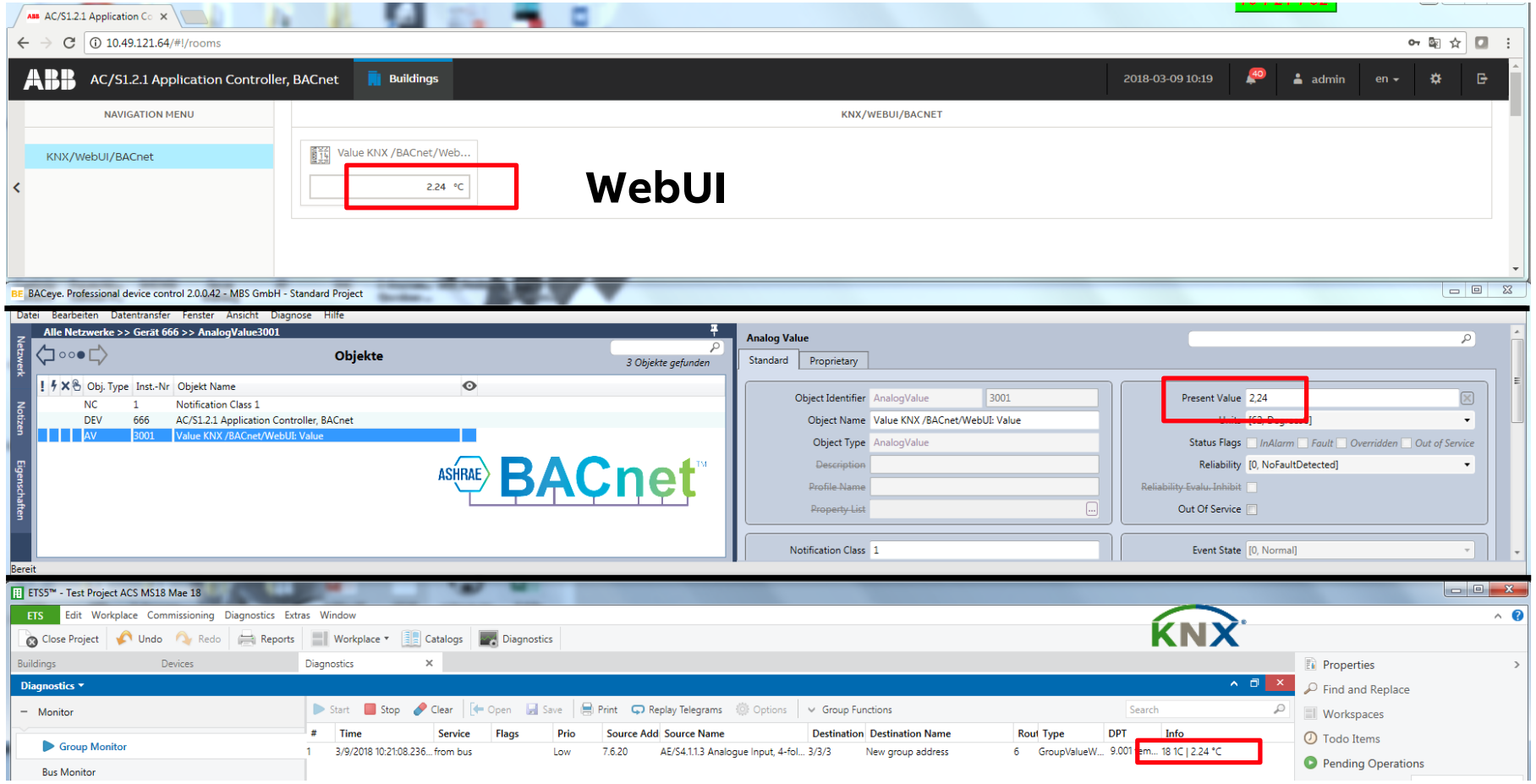

Application Controller AC/S 1.x.1

Introduction

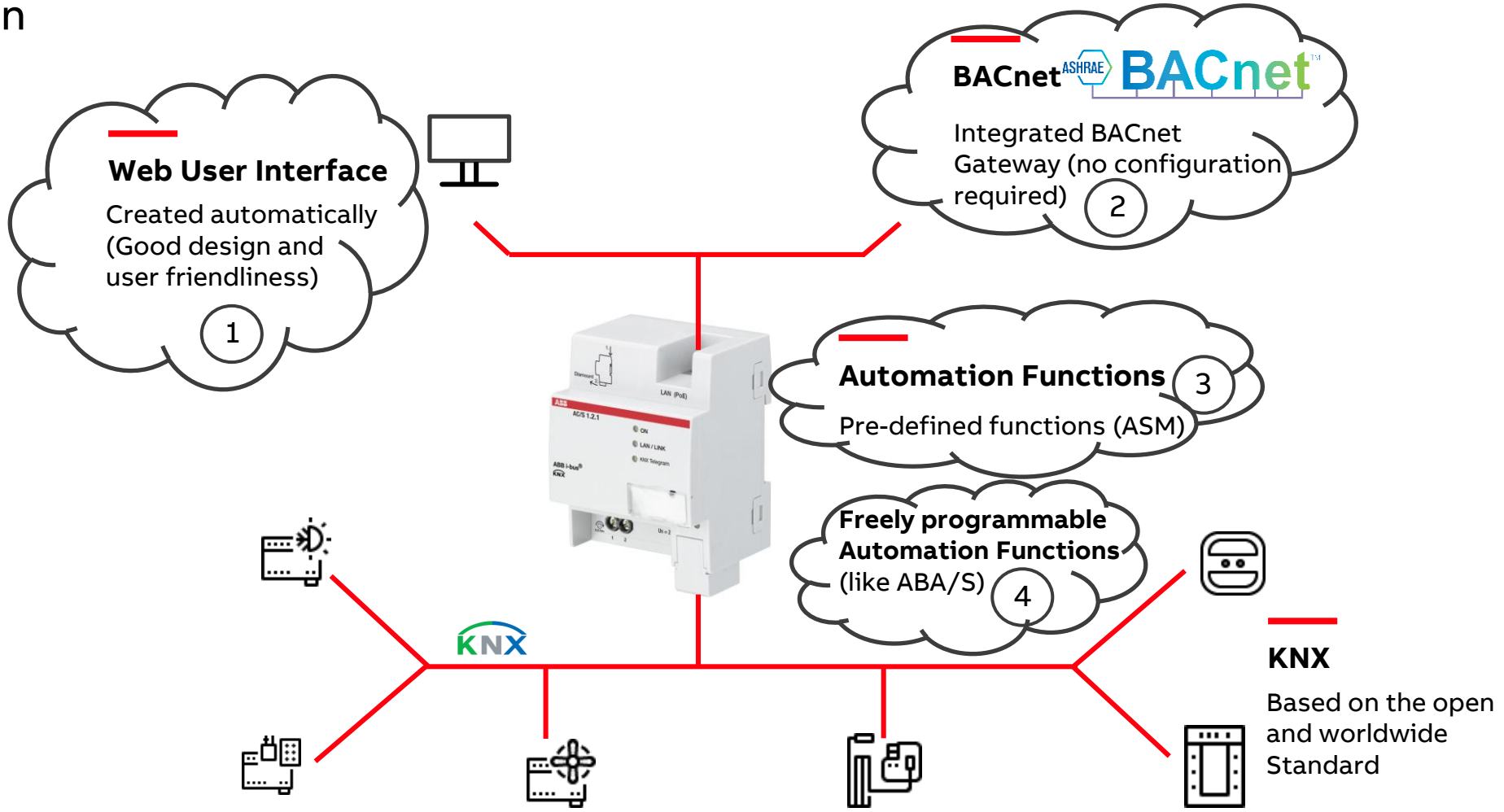

Application Controller AC/S 1.x.1

Introduction

Motivation – New Features

Predefined Automation Modules

- ASM –> **A**utomation **S**pecific **M**odules
- Represent specific functionality, can execute function by itself or together with other ASM's e.g. room setpoints or heating/cooling circuit control
  - In- and/or outputs (sockets)
  - Parameters
  - Group objects
  - Linking view with sockets to be connected to KNX objects, WebUI, BACnet or other ASM's

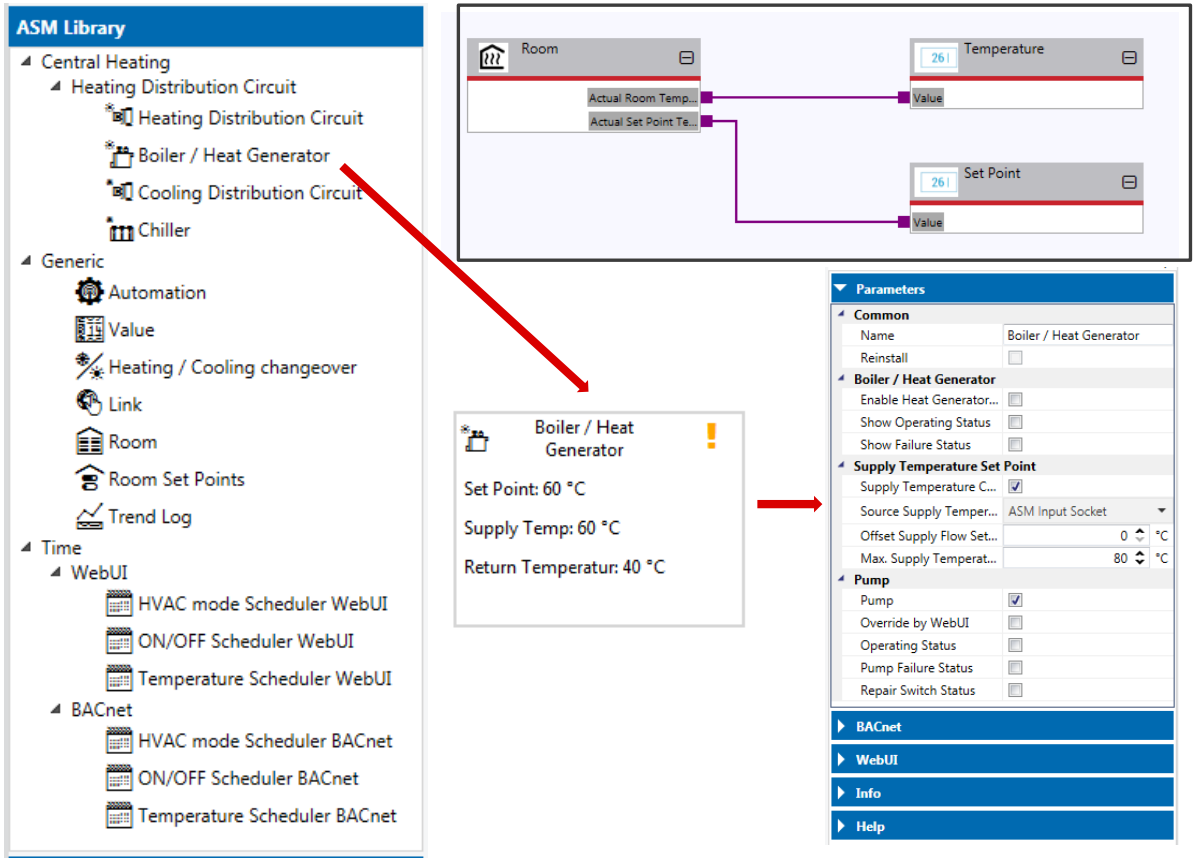

Application Controller AC/S 1.x.1

Introduction

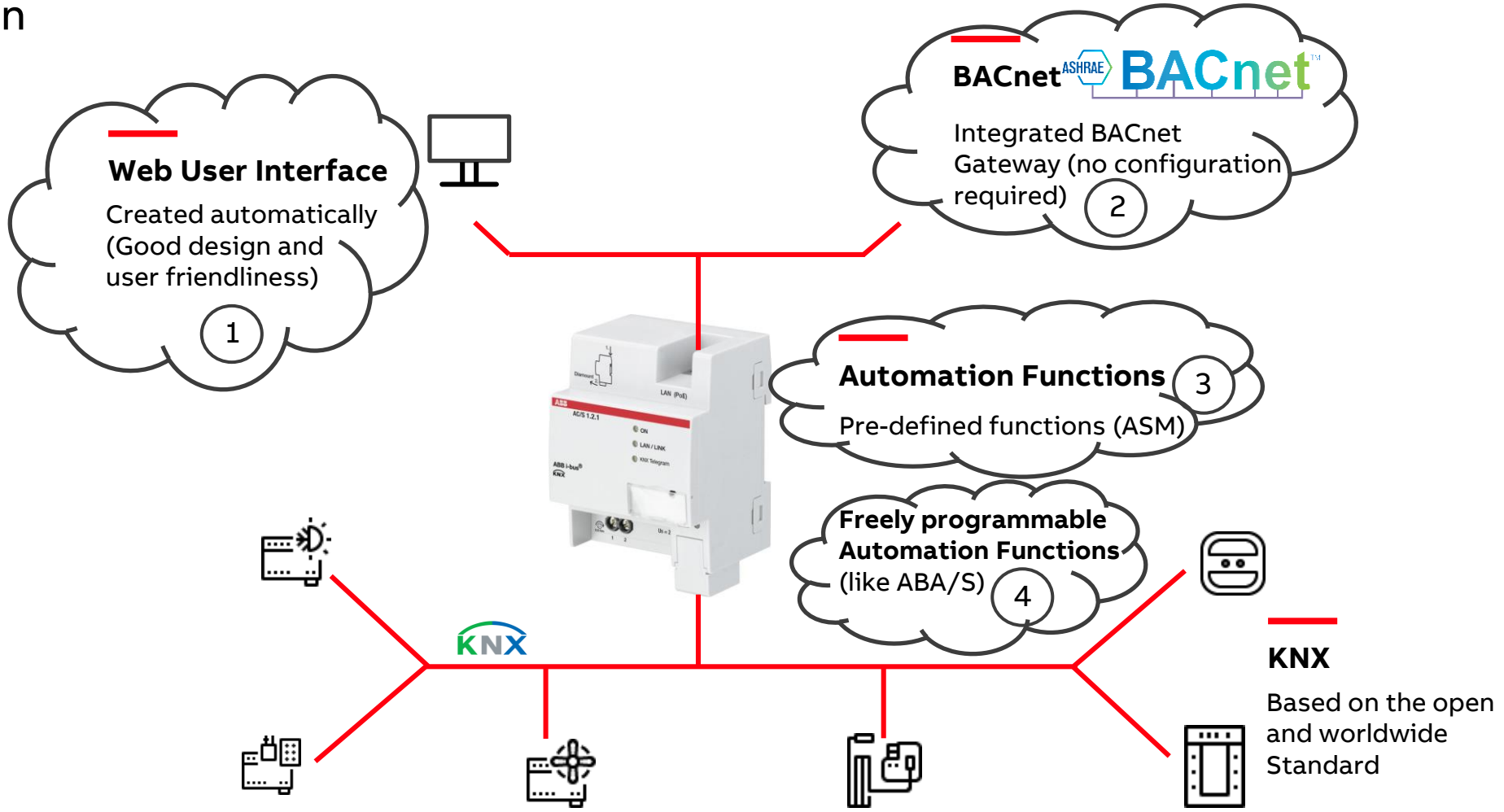

Application Controller AC/S 1.x.1

Introduction

Motivation – New Features

ASM Automation: Freely programmable like Logic Controller ABA/S 1.2.1

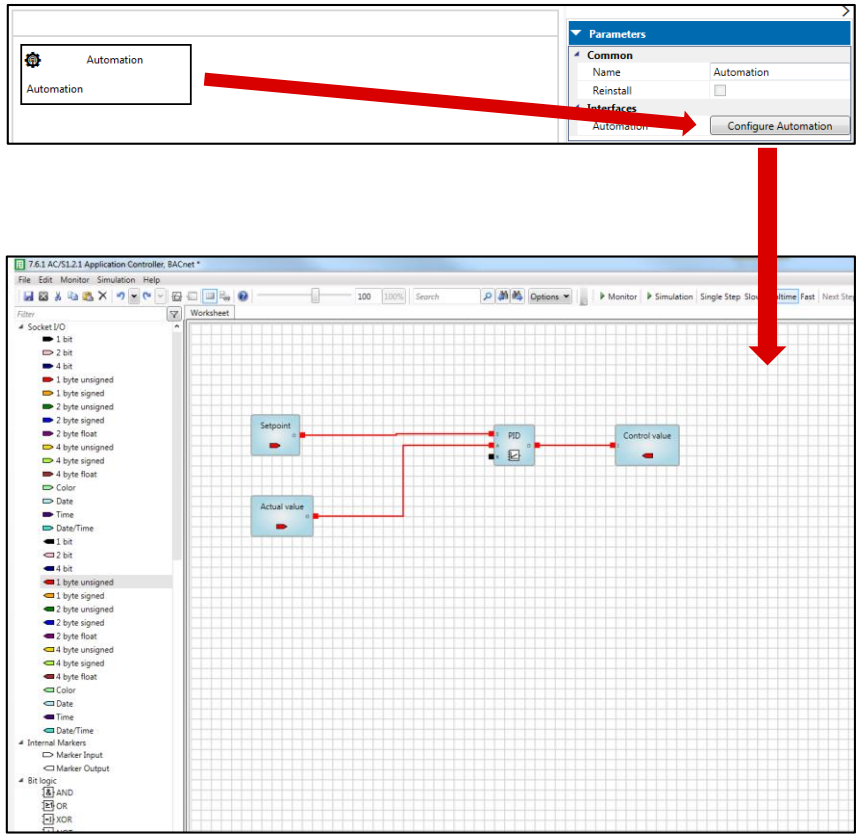

BAC/S 1.5.1 Building Automation Controller KNX

Introduction

Flexible IO-Modules

Pick the In- and Output Modules you need for your Application

Freely Programmable

Easy creation and reuse of Automation Software by standardized Programming Language

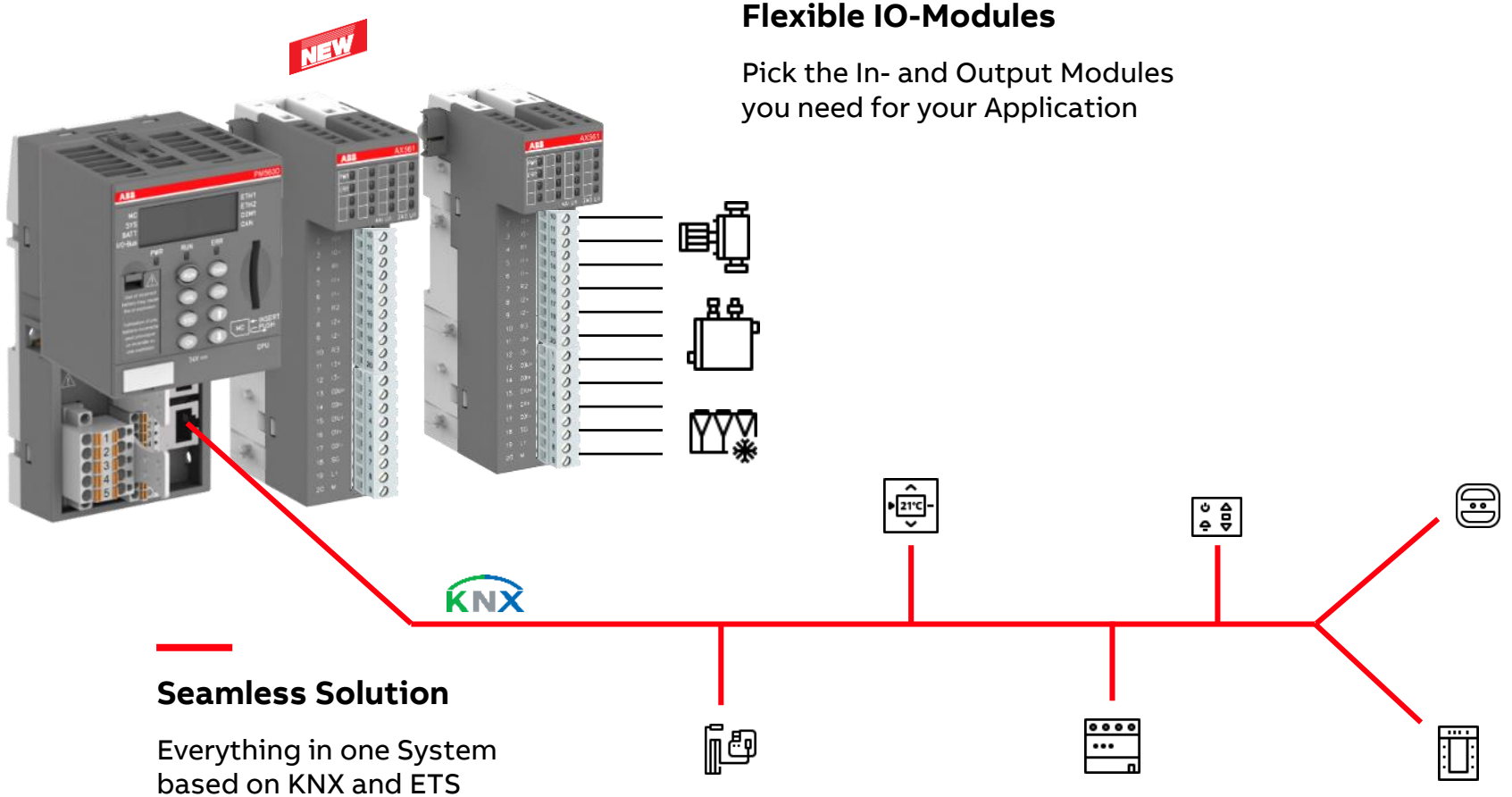

Seamless Solution

Everything in one System based on KNX and ETS

BAC/S 1.5.1 Building Automation Controller KNX

Introduction

Freely Programmable

- Advanced Programming based on standardized IEC 61131-3 Programming Languages in ABB Automation Builder based on established CODESYS Software
- Easy reuse of your existing CODESYS based Projects
- Easy use of 3rd Party IEC 61131-3 Automation Software Libraries

ABB Automation Builder

CODESYS

ETS PROFESSIONAL

BAC/S 1.5.1 Building Automation Controller KNX

Introduction

KNX

- Seamless Solution from Automation Controllers to Room Automation. No Gateways and Integration Effort required
- Integrated in KNX and ETS
  - Built-in KNX Interface based on KNXnet/IP (Ethernet) to connect to the KNX IP-Router Backbone
  - The BAC/S is a standard KNX Device with Group Objects in ETS and physical KNX Address
  - Direct data exchange between the Engineering Software ABB Automation Builder and ETS
- Availability: October 2018

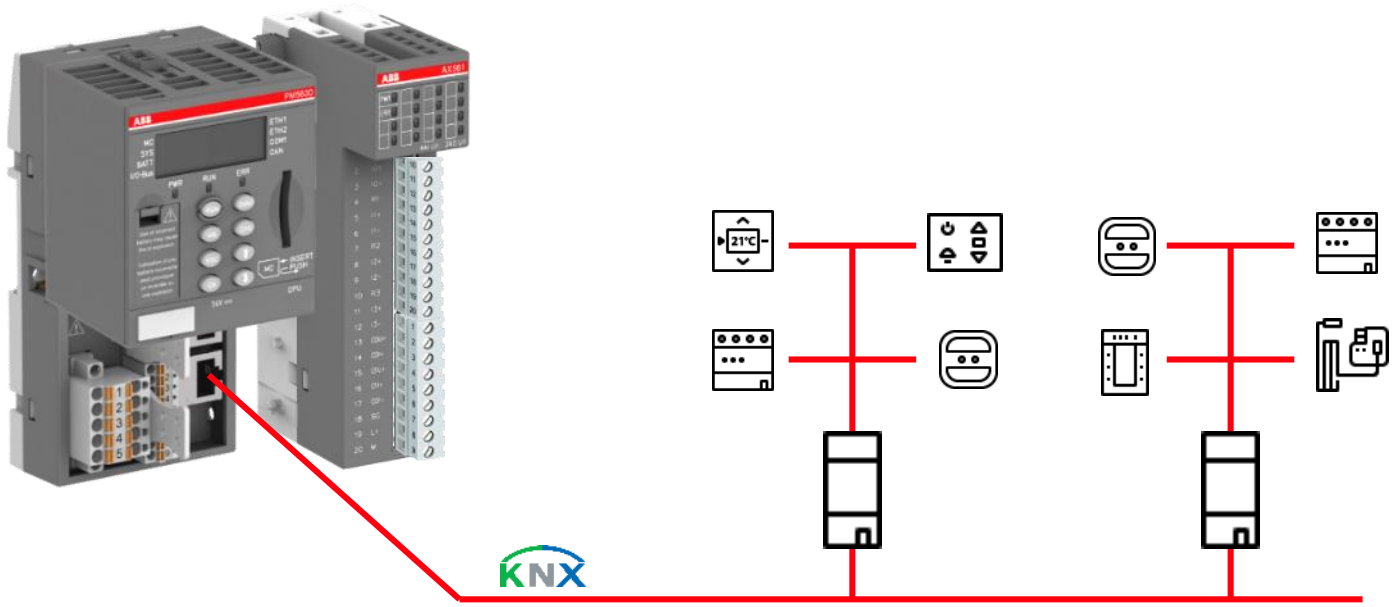

©ABB

ClimaECO: ABB i-bus® KNX HVAC Solutions

Go-To-Market Timeline

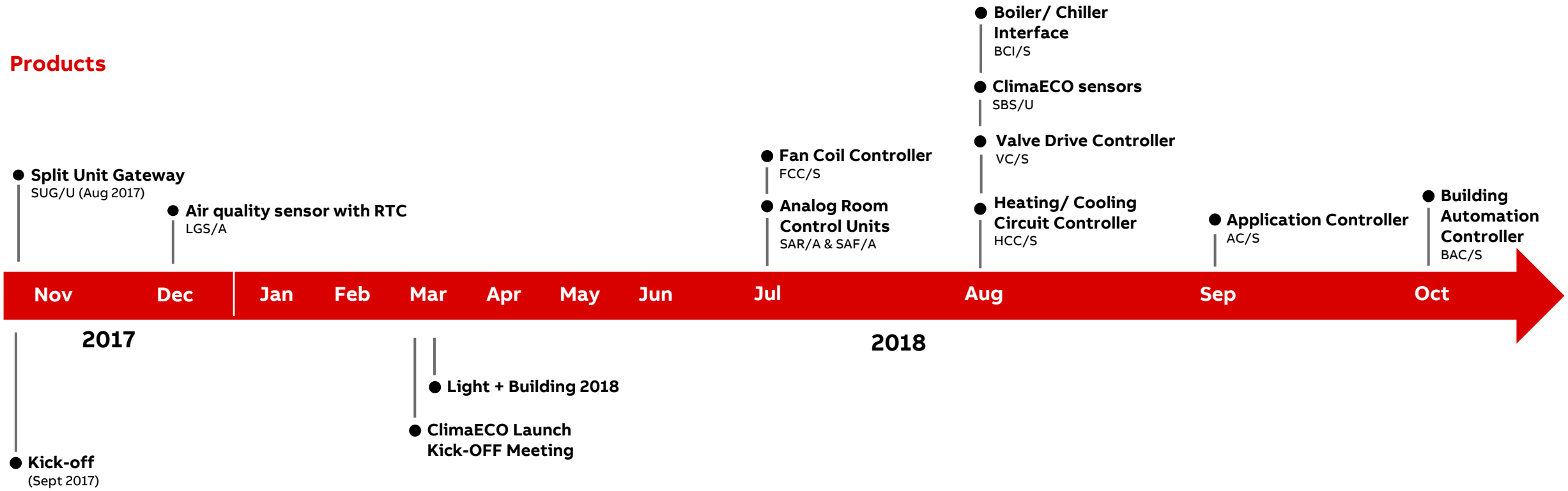

ClimaECO: ABB i-bus® KNX HVAC Solutions

Available content for ClimaECO

Available content **ABB internal**:

- Presentation ClimaECO (Overview)
- ABB-ClimaECO
- Specification Text (step by step)
  - FCC/S, VC/S, ABB-ClimaECO, AC/S (May 2018)
- Key Visual (Picture)
- Press Release
- Video – Questions and Answers

→ Link

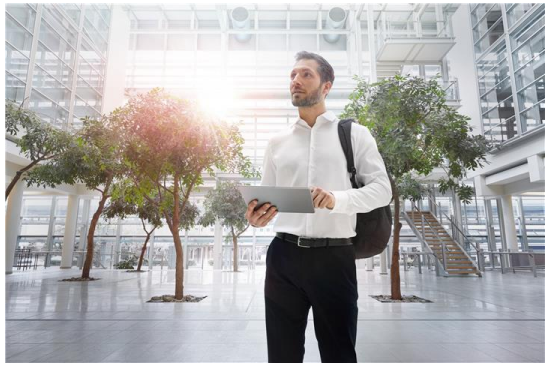

- ClimaECO Portfolio Presentation
  - ClimaECO EN (Power Point)
  - ClimaECO EN (PDF)
  - ClimaECO DE (Power Point)
  - ClimaECO DE (PDF)
  - ClimaECO sensors Portoflio
    - ClimaECO sensors EN (PDF)
    - ClimaECO sensors DE (PDF)
- Product Data & Images
  - Product Data is available at ABB Products Database and ABB Image Bank
  - ClimaECO sensors Product Data is yet only available at the Busch-Jaeger Online-Catalogue
- Tender Specification
  - Pre-Release Version 04.05.2018
- External Web Page
  - abb.com/ClimaECO
  - abb.de/ClimaECO
- Brochure
  - ClimaECO Brochure (EN)
  - Magalog extraction ClimaECO (EN/DE)
- Key Visual
  - Download here
- Press Release
  - ClimaECO EN
  - ClimaECO DE
- Print Ad
- Fair booth
  - Light + Building 2018
- Video
  - ClimaECO Introduction Video
  - ClimaECO DE Interview
  - ClimaECO Internal Team Video (ABB intern only)
    - ABB TV
    - ABB Library Download

©ABB

ClimaECO: ABB i-bus® KNX HVAC Solutions

Available content for ClimaECO

Available content **external**:

- Web Page: www.abb.com/ClimaECO (EN)
- Web Page: www.abb.de/ClimaECO (DE)

- Video on Youtube: “ClimaECO – Heating Ventilation and Air Conditioning with ABB i-bus® KNX”

  → Link

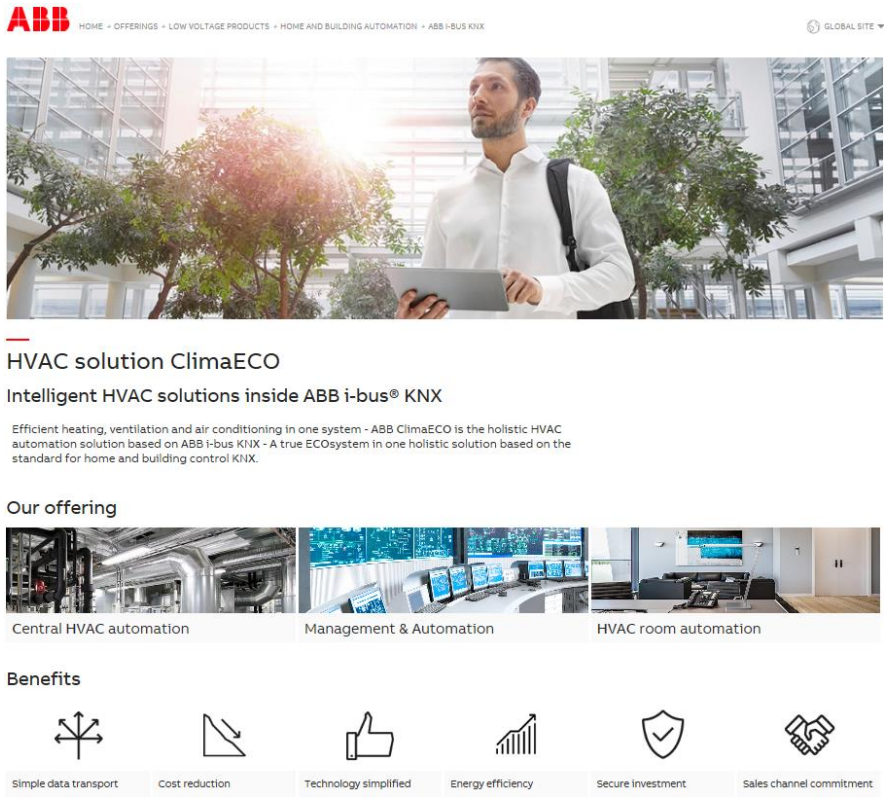

ClimaECO: ABB i-bus® KNX HVAC Solutions

Training Timeline (Webinars)

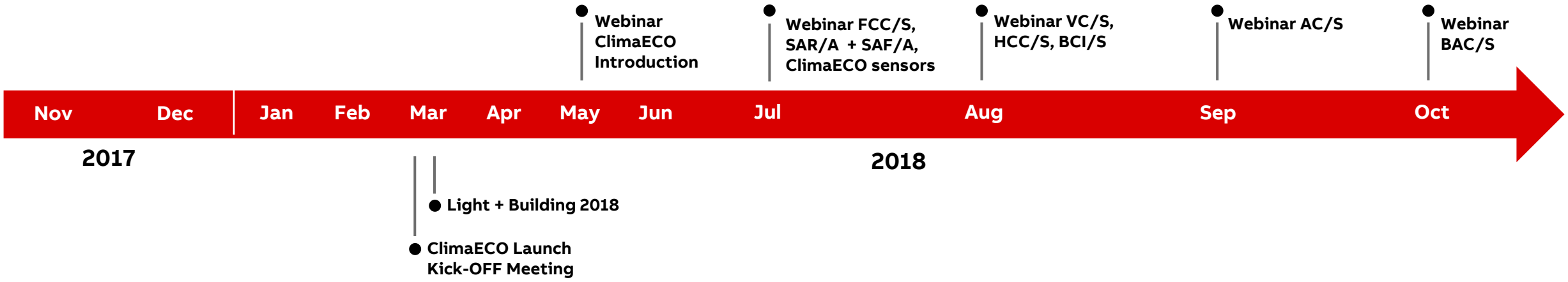

ClimaECO: ABB i-bus® KNX HVAC Solutions

Training & Qualification Calendar 2018

In addition to the online modules and the traditional training programs offered by your local ABB sales team, we offer a variety of on-site trainings conducted by our specialists at different ABB training facilities

In this Training & Qualification Calendar you can find the educational events that are taking place during 2018

If you are interested in a training please click the “REGISTER HERE” button

www.abb.com/knx or https://go.abb/ba-training

→ Training and Qualification

→ Training Calendar

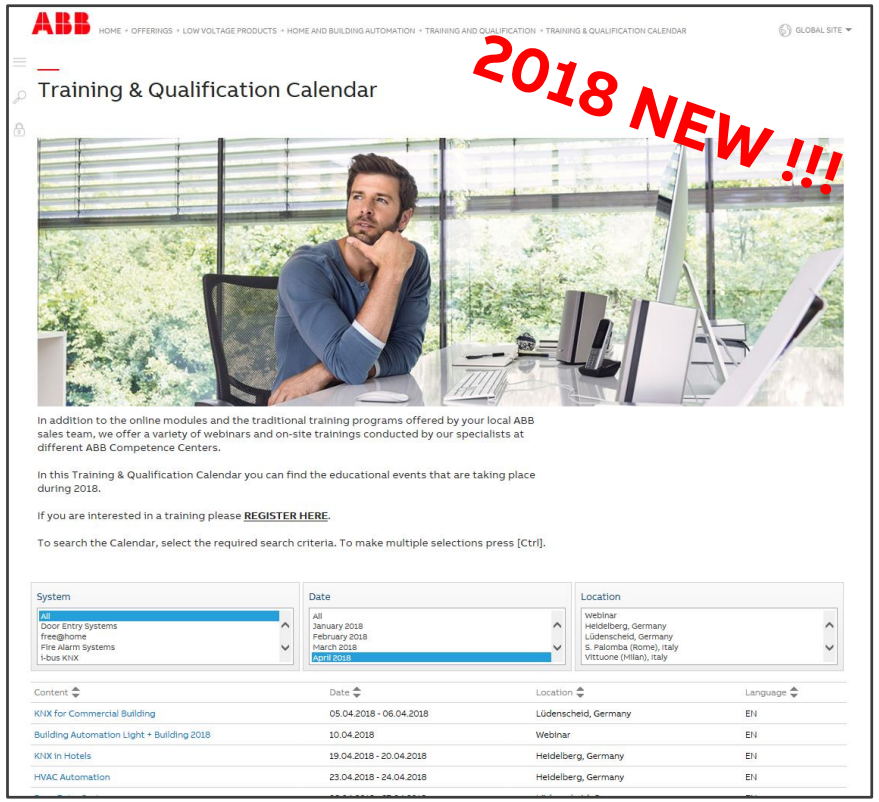

©ABB

ClimaECO: ABB i-bus® KNX HVAC Solutions

KNX Certified Training

Certified KNX Courses in Heidelberg

- Advanced Course 16th to 20th July
- Tutor Course 09th to 13th October

And many more training courses in the calendar
“International Training Dates 2018”

www.abb.com/knx or https://go.abb/ba-training

ClimaECO: ABB i-bus® KNX HVAC Solutions

Next Webinar

KNX Security Panel GM/A 8.1

Wednesday 13th June 2018

- Morning 09:00 am Europe Time (Berlin, UTC + 2h)
- Afternoon 03:00 pm Europe Time (Berlin, UTC + 2h)

Smartphone App

Remote access via “MyBuildings portal”

Service functionality

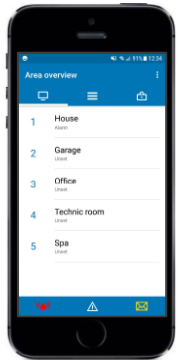

iOS

safe&smart

MyBuildings portal

Disclaimer

The information in this document is subject to change without notice and should not be construed as a commitment by ABB. ABB assumes no responsibility for any errors that may appear in this document.

In no event shall ABB be liable for direct, indirect, special, incidental or consequential damages of any nature or kind arising from the use of this document, nor shall ABB be liable for incidental or consequential damages arising from use of any software or hardware described in this document.

© Copyright [2018] ABB. All rights reserved.