Product notes
ABB's new motors for explosive atmospheres deliver safety, reliability and efficiency in a compact size

ABB has upgraded its range of motors for explosive atmospheres with a new line of compact and competitive products.

The new motors come in frame sizes 71 – 250, with size 71 being a downward extension of the range. They are available with non-sparking (Ex nA) or dust ignition (Ex tb and Ex tc) protection.

Reliable and safe

Basic elements of the new motors - like the enclosure, bearing system and electrical design - have been taken from the Process performance motor range (type M3BP), which has proven itself over many years as a reliable workhorse in the process industry. The safety, reliability and flexibility of the Process performance range make it an ideal platform for both non-sparking and dust ignition protection motors.

The motors are available with 2 - 8 poles in sizes 71 - 132 and 2 - 12 poles in sizes 160 - 250. The power range extends from 0.25 kW to 86 kW (size 250, high output version). The voltage range for the smaller motors (frame sizes 71 and 80) is up to 500 V, and up to 690 V for the larger sizes.

The motors meet the requirements for IEC efficiency level IE2, with IE3 available from frame size 200. The motors have also been registered for Australian MEPS and the China Energy Label.

Certification

In addition to ATEX certificates for both Ex nA and Ex t protection, global IECEx certificates are available. The motors are certified according to the latest IEC and EN standards, which means that equipment protection level (EPL) markings are provided.

IEC 60079-0 (2011)	EN 60079-0 (2012)
IEC 60079-15 (2010)	EN 60079-15 (2010)
IEC 60079-31 (2008)	EN 60079-31 (2009)

Additional local certificates, will be made available during 2014.

Variable speed applications

The motors are tested and certified for use with ABB ACS800 DTC and ACS550 frequency converters using the loadability curves shown below.

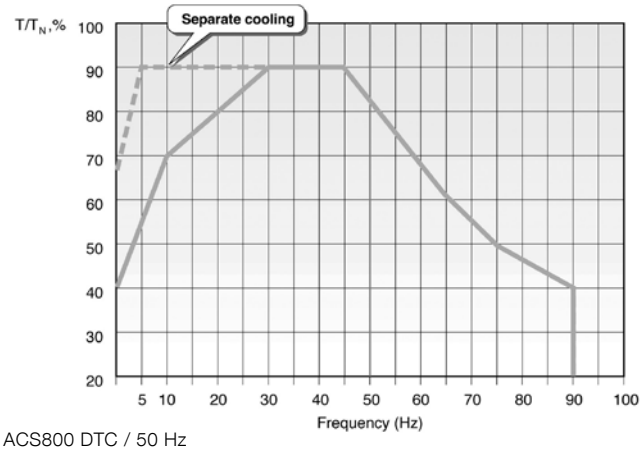

ACS800 DTC / 50 Hz

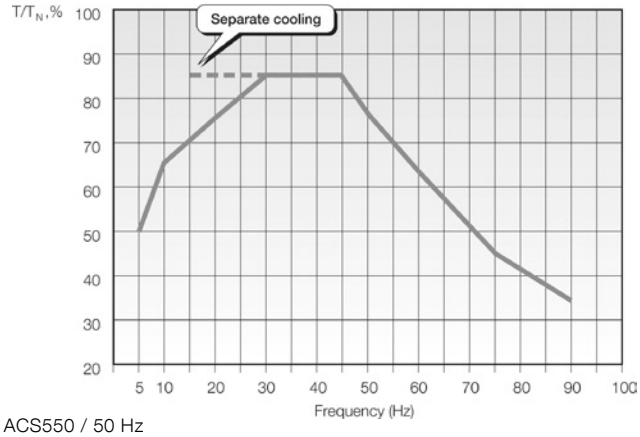

ACS550 / 50 Hz

Power and productivity
for a better world™

Technical data for non-sparking and dust ignition protection motors, IE2

Technical data for 400 V 50 Hz can be found in the tables below, data for other voltages on request.

Output kW	Motor type	Product code	Speed r/min	Efficiency IEC 60034--2-1; 2007 Full load 100%	3/4 load 75%	1/2 load 50%	Power factor cos φ	Current I_N A	I_s / I_N	Torque T_N Nm	T_i / T_N	T_b / T_N	Moment of inertia J = 1/4 GD² kgm²	Weight kg	Sound pressure level L_{PA} dB
3000 r/min = 2 poles		**400 V 50 Hz**						**CENELEC-Design**							
0.37	M3GP 71 MA	3GGP 071 321-••B	2768	74.8	74.7	71.0	0.78	0.91	4.5	1.27	2.2	2.3	0.00039	11	58
0.55	M3GP 71 MB	3GGP 071 322-••B	2813	77.8	78.3	76.0	0.79	1.29	5.6	1.86	2.4	2.5	0.00051	11	56
0.75	M3GP 80 MB	3GGP 081 322-••B	2895	80.6	79.9	76.2	0.74	1.81	7.7	2.4	4.2	4.2	0.001	16	57
1.1	M3GP 80 MC	3GGP 081 323-••B	2870	81.8	82.4	80.2	0.80	2.4	7.5	3.6	2.7	3.5	0.0012	18	60
1.5	M3GP 90 SLB	3GGP 091 322-••B	2900	82.2	84.1	82.7	0.86	3	7.5	4.9	2.5	2.6	0.00254	24	69
2.2	M3GP 90 SLC	3GGP 091 323-••B	2885	84.7	86.7	85.7	0.87	4.3	6.8	7.2	1.9	2.5	0.0028	25	64
3	M3GP 100 LB	3GGP 101 322-••B	2925	85.2	84.9	82.8	0.86	5.9	9.1	9.7	3.1	3.5	0.00528	36	68
4	M3GP 112 MB	3GGP 111 322-••B	2895	86.1	87.0	86.6	0.86	7.7	8.1	13.1	2.9	3.2	0.00575	37	70
5.5	M3GP 132 SMB	3GGP 131 322-••B	2865	88.0	88.6	88.0	0.86	10.4	7.0	18.3	2.0	2.7	0.01275	68	70
7.5	M3GP 132 SMC	3GGP 131 324-••B	2890	88.6	88.8	87.5	0.84	14.5	7.3	24.7	2.0	3.6	0.01359	70	70
11	M3GP 160 MLA	3GGP 161 410-••D	2931	90.1	90.5	89.6	0.89	19.7	7.2	35.8	2.6	3.1	0.043	139	71
15	M3GP 160 MLB	3GGP 161 420-••D	2929	91.2	91.9	91.4	0.89	26.6	7.2	48.9	3.0	3.5	0.052	149	71
18.5	M3GP 160 MLC	3GGP 161 430-••D	2934	91.8	92.2	91.8	0.90	32.3	7.5	60.2	2.8	3.4	0.062	159	69
22	M3GP 180 MLA	3GGP 181 410-••D	2938	91.7	92.2	91.7	0.90	38.4	7.0	71.5	2.5	3.1	0.089	199	69
30	M3GP 200 MLA	3GGP 201 410-••D	2956	93.2	93.6	93.0	0.88	52.7	7.4	96.9	3.0	3.2	0.15	275	74
37	M3GP 200 MLC	3GGP 201 430-••D	2954	93.6	94.0	93.4	0.89	64.1	7.5	119	2.8	3.2	0.19	304	75
45	M3GP 225 SMB	3GGP 221 220-••D	2968	93.9	93.8	92.9	0.87	79.5	7.2	144	2.7	3.0	0.26	357	76
55	M3GP 250 SMA	3GGP 251 210-••D	2975	94.3	94.1	93.0	0.89	94.5	7.8	176	2.4	3.1	0.49	445	75
3000 r/min = 2-poles		**400 V 50 Hz**						**High-output design**							
22 [2]	M3GP 160 MLD	3GGP 161 440-••D	2929	91.2	91.6	91.0	0.90	38.6	7.3	71.7	2.7	3.4	0.07	166	77
30	M3GP 180 MLB	3GGP 181 420-••D	2943	92.5	93.0	92.6	0.90	52	6.8	97.3	2.3	3.1	0.13	236	78
37	M3GP 180 MLC	3GGP 181 430-••D	2947	92.8	93.0	92.5	0.90	63.9	7.9	119	2.9	3.6	0.13	237	77
45	M3GP 200 MLE	3GGP 201 450-••D	2944	93.3	93.6	93.0	0.88	79.1	7.3	145	2.9	3.1	0.22	312	79
55	M3GP 225 SMC	3GGP 221 230-••D	2965	93.9	93.9	92.9	0.88	96	7.1	177	2.6	3.0	0.29	377	80
67	M3GP 225 SMD	3GGP 221 240-••D	2966	93.9	93.7	92.6	0.86	119	7.4	215	2.8	3.2	0.31	388	78
75	M3GP 250 SMB	3GGP 251 220-••D	2969	94.0	94.0	93.2	0.89	129	7.9	241	2.6	3.2	0.57	487	80
90 [1] [2]	M3GP 250 SMC	3GGP 251 230-••D	2965	94.0	94.2	93.7	0.90	153	7.7	289	2.6	3.1	0.59	500	80
1500 r/min = 4-poles		**400 V 50 Hz**						**CENELEC-Design**							
0.25	M3GP 71 MA	3GGP 072 321-••B	1365	68.3	70.8	69.7	0.81	0.65	3.5	1.74	1.9	2.0	0.00074	10	45
0.37	M3GP 71 MB	3GGP 072 322-••B	1380	72.4	74.5	74.6	0.83	0.88	4.0	2.5	1.6	2.1	0.00088	11	45
0.55	M3GP 80 MA	3GGP 082 321-••B	1415	74.5	73.8	70.0	0.73	1.45	5.0	3.7	2.0	2.8	0.00144	15	45
0.75	M3GP 80 MD	3GGP 082 324-••B	1430	81.0	80.7	77.3	0.73	1.83	5.3	5	2.7	3.2	0.00205	17	50
1.1	M3GP 90 SLB	3GGP 092 322-••B	1435	83.6	84.5	83.2	0.80	2.3	6.1	7.3	2.7	3.4	0.0044	25	50
1.5	M3GP 90 SLD	3GGP 092 325-••B	1430	84.3	85.6	84.7	0.83	3	6.3	10	2.7	3.4	0.0053	27	56
2.2	M3GP 100 LC	3GGP 102 323-••B	1450	85.9	85.1	83.4	0.78	4.7	6.4	14.4	2.9	3.6	0.00948	36	56
3	M3GP 100 LD	3GGP 102 324-••B	1450	86.8	87.0	85.4	0.79	6.3	7.7	19.7	2.9	3.4	0.011	38	58
4	M3GP 112 MB	3GGP 112 322-••B	1440	86.8	87.7	87.3	0.81	8.2	7.0	26.5	2.5	2.9	0.0125	44	59
5.5	M3GP 132 SMB	3GGP 132 322-••B	1460	89.0	89.8	88.9	0.80	11.1	5.9	35.9	1.7	2.4	0.03282	70	67
7.5	M3GP 132 SMC	3GGP 132 323-••B	1450	89.3	90.1	90.0	0.81	14.9	5.6	49.3	1.6	2.4	0.03659	73	64
11	M3GP 160 MLC	3GGP 162 430-••D	1470	91.2	91.5	90.6	0.82	21.2	7.8	71.4	3.0	3.5	0.096	160	62
15	M3GP 160 MLE	3GGP 162 450-••D	1467	92.0	92.4	92.1	0.84	28	7.8	97.6	3.0	3.4	0.13	183	61
18.5	M3GP 180 MLA	3GGP 182 410-••D	1474	91.6	92.0	91.2	0.83	35.1	7.2	119	2.6	3.1	0.19	213	62
22	M3GP 180 MLB	3GGP 182 420-••D	1474	92.2	92.8	92.3	0.82	42	7.9	142	2.9	3.4	0.23	232	62
30	M3GP 200 MLB	3GGP 202 420-••D	1471	92.4	93.3	93.1	0.84	55.7	7.4	194	3.0	2.8	0.34	306	61
37	M3GP 225 SMB	3GGP 222 220-••D	1480	93.6	93.9	93.4	0.85	67.1	7.6	238	3.2	2.9	0.42	347	67
45	M3GP 225 SMC	3GGP 222 230-••D	1477	94.1	94.6	94.4	0.88	78.4	7.6	290	3.2	2.7	0.49	379	67
55	M3GP 250 SMA	3GGP 252 210-••D	1479	94.3	94.3	93.6	0.84	100	7.2	355	2.5	3.1	0.72	436	66
1500 r/min = 4-poles		**400 V 50 Hz**						**High-output design**							
18.5	M3GP 160 MLF	3GGP 162 460-••D	1469	91.7	92.1	91.4	0.83	35	7.8	120	3.2	3.5	0.13	183	68
22 [2]	M3GP 160 MLG	3GGP 162 470-••D	1466	90.8	91.1	90.4	0.81	43.1	7.9	143	3.3	3.6	0.13	183	68
30 [1] [2]	M3GP 180 MLC	3GGP 182 430-••D	1473	92.2	92.3	91.6	0.81	57.9	7.1	194	2.8	3.2	0.248	241	66
37	M3GP 200 MLC	3GGP 202 430-••D	1475	93.0	93.1	92.3	0.82	70	7.5	239	3.5	3.2	0.34	306	73
55	M3GP 225 SMD	3GGP 222 240-••D	1483	94.3	94.5	93.9	0.83	101	7.4	354	3.4	2.9	0.55	404	68
60 [2]	M3GP 225 SME	3GGP 222 250-••D	1479	93.6	93.7	92.9	0.84	110	8.0	387	3.6	3.0	0.55	403	74
75	M3GP 250 SMB	3GGP 252 220-••D	1476	94.3	94.5	94.2	0.86	133	7.6	485	2.8	3.2	0.88	490	73
86 [2]	M3GP 250 SMC	3GGP 252 230-••D	1477	94.1	94.4	94.0	0.85	155	7.8	556	2.9	3.5	0.98	518	74

[1] Temperature rise class F

[2] Efficiency class IE1

Technical data for non-sparking and dust ignition protection motors, IE2

Technical data for 400 V 50 Hz can be found in the tables below, data for other voltages on request.

Output kW	Motor type	Product code	Speed r/min	Efficiency IEC 60034--2-1; 2007 Full load 100%	3/4 load 75%	1/2 load 50%	Power factor cos φ	Current I_N A	I_s / I_N	Torque T_N Nm	T_i / T_N	T_b / T_N	Moment of inertia J = 1/4 GD² kgm²	Weight kg	Sound pressure level L_{PA} dB
1000 r/min = 6-poles		**400 V 50 Hz**						**CENELEC-Design**							
0.18	M3GP 71 MA	3GGP 073 321-••B	900	63.7	63.8	59.0	0.71	0.57	3.1	1.9	2.0	2.1	0.00089	10	42
0.25	M3GP 71 MB	3GGP 073 322-••B	895	67.2	67.2	62.6	0.69	0.77	3.4	2.6	2.2	2.3	0.0011	12	42
0.37	M3GP 80 MA	3GGP 083 321-••B	915	71.0	71.1	67.0	0.69	1.09	3.6	3.8	1.8	2.2	0.00187	15	47
0.55	M3GP 80 MB	3GGP 083 322-••B	920	73.9	75.0	72.8	0.71	1.51	3.8	5.7	1.8	2.2	0.00239	17	47
0.75	M3GP 90 SLC	3GGP 093 323-••B	960	78.7	77.3	72.5	0.58	2.3	4.5	7.4	2.3	3.1	0.00491	25	44
1.1	M3GP 90 SLE	3GGP 093 324-••B	930	78.2	78.6	76.4	0.66	3	4.0	11.2	1.9	2.3	0.0054	28	44
1.5	M3GP 100 L	3GGP 103 322-••B	950	82.2	82.9	81.6	0.69	3.8	4.0	15	1.5	1.1	0.00873	37	49
2.2	M3GP 112 MB	3GGP 113 322-••B	950	82.5	83.8	81.7	0.69	5.5	4.4	22.1	1.7	2.3	0.0125	44	66
3	M3GP 132 SMB	3GGP 133 321-••B	975	85.3	84.5	81.3	0.63	8	5.5	29.3	1.8	2.9	0.03336	69	57
4	M3GP 132 SMB	3GGP 133 322-••B	960	84.9	85.3	83.9	0.68	10	4.6	39.7	1.5	2.2	0.03336	69	57
5.5	M3GP 132 SMF	3GGP 133 324-••B	965	86.1	86.6	85.5	0.71	12.9	5.1	54.4	2.0	2.3	0.0487	86	57
7.5	M3GP 160 MLA	3GGP 163 410-••D	967	87.7	89.2	89.6	0.79	15.6	6.9	74	1.8	2.9	0.126	181	65
11	M3GP 160 MLB	3GGP 163 420-••D	972	90.1	90.8	90.4	0.81	21.7	7.8	108	2.3	3.5	0.126	181	65
15	M3GP 180 MLB	3GGP 183 420-••D	972	90.4	91.0	90.4	0.82	29.2	7.2	147	1.9	3.2	0.25	240	58
18.5	M3GP 200 MLA	3GGP 203 410-••D	983	90.9	91.1	90.3	0.82	35.8	7.1	179	3.2	3.1	0.37	266	66
22	M3GP 200 MLB	3GGP 203 420-••D	983	91.6	91.9	91.0	0.82	42.2	7.5	213	3.2	3.2	0.43	283	61
30	M3GP 225 SMB	3GGP 223 220-••D	985	92.2	92.6	92.2	0.82	57.2	7.4	290	3.4	3.0	0.64	344	61
37	M3GP 250 SMA	3GGP 253 210-••D	987	93.1	93.4	92.8	0.81	70.8	7.2	357	3.2	2.9	1.16	440	66
1000 r/min = 6-poles		**400 V 50 Hz**						**High-output design**							
14 [1)2)]	M3GP 160 MLC	3GGP 163 430-••D	969	89.2	89.4	88.0	0.75	30.2	7.9	137	2.8	3.9	0.126	181	64
18.5 [2)]	M3GP 180 MLC	3GGP 183 430-••D	975	90.1	90.2	88.7	0.74	40	7.2	181	2.0	3.2	0.25	240	61
30 [2)]	M3GP 200 MLC	3GGP 203 430-••D	983	90.8	91.2	90.2	0.81	58.8	7.5	291	3.5	3.4	0.49	302	65
37 [2)]	M3GP 225 SMC	3GGP 223 230-••D	983	92.1	92.5	92.1	0.83	69.8	7.1	359	3.0	2.8	0.75	371	64
45	M3GP 250 SMB	3GGP 253 220-••D	986	93.1	93.3	92.6	0.82	85	7.2	435	3.3	2.8	1.49	487	65
750 r/min = 8-poles		**400 V 50 Hz**						**CENELEC-Design**							
0.09	M3GP 71 MA	3GGP 074 101-••B	660	49.4	46.0	38.5	0.59	0.44	2.0	1.3	1.8	2.0	0.00089	11	40
0.12	M3GP 71 MB	3GGP 074 102-••B	670	51.4	47.5	39.9	0.56	0.6	2.1	1.71	2.8	2.4	0.0011	12	43
0.18	M3GP 80 MA	3GGP 084 101-••B	700	54.2	51.1	43.5	0.59	0.81	3.6	2.4	2.2	2.5	0.00187	15	45
0.25	M3GP 80 MB	3GGP 084 102-••B	680	58.6	58.1	52.3	0.65	0.94	3.0	3.5	2.0	1.9	0.00239	17	50
0.37	M3GP 90 SLB	3GGP 094 102-••B	705	66.3	64.0	57.1	0.54	1.49	2.8	5	1.4	2.2	0.00444	24	50
0.55	M3GP 90 SLC	3GGP 094 103-••B	655	61.8	65.6	65.2	0.67	1.91	2.3	8	1.3	1.5	0.00491	25	53
0.75	M3GP 100 LA	3GGP 104 101-••B	710	74.0	73.0	68.2	0.61	2.3	3.6	10	1.8	2.5	0.0072	30	46
1.1	M3GP 100 LB	3GGP 104 102-••B	695	76.0	76.5	74.6	0.66	3.1	3.4	15.1	1.7	2.2	0.00871	30	53
1.5	M3GP 112 M	3GGP 114 101-••B	690	74.4	75.9	74.1	0.70	4.1	3.2	20.7	1.4	1.9	0.0106	39	55
2.2	M3GP 132 SMA	3GGP 134 101-••B	715	79.7	80.8	78.7	0.66	6	3.2	29.3	1.1	1.7	0.03336	70	56
3	M3GP 132 SMB	3GGP 134 102-••B	715	79.9	80.8	79.1	0.64	8.4	4.7	40	1.2	1.8	0.04003	75	58
4	M3GP 160 MLA	3GGP 164 410-••D	716	83.3	84.3	83.5	0.70	9.9	5.4	53.3	1.6	2.8	0.133	181	59
5.5	M3GP 160 MLB	3GGP 164 420-••D	723	86.8	87.6	86.8	0.71	12.8	5.8	72.6	1.9	3.1	0.133	182	53
7.5	M3GP 160 MLC	3GGP 164 430-••D	718	85.5	86.3	85.5	0.70	18	5.7	99.7	2.1	3.1	0.133	181	55
11	M3GP 180 MLB	3GGP 184 420-••D	723	88.3	89.2	88.7	0.72	24.9	5.7	145	1.7	2.7	0.245	237	63
15	M3GP 200 MLA	3GGP 204 410-••D	734	89.9	90.3	89.6	0.79	30.4	7.0	195	2.4	3.2	0.45	278	56
18.5	M3GP 225 SMA	3GGP 224 210-••D	734	90.0	90.3	89.3	0.74	40	6.1	240	2.2	3.0	0.61	326	55
22	M3GP 225 SMB	3GGP 224 220-••D	732	90.6	91.2	90.6	0.77	45.5	6.5	287	1.9	2.9	0.68	343	56
30	M3GP 250 SMA	3GGP 254 210-••D	735	91.4	91.2	90.7	0.78	60.7	6.7	389	2.0	2.9	1.25	440	56
750 r/min = 8-poles		**400 V 50 Hz**						**High-output design**							
18.5	M3GP 200 MLB	3GGP 204 420-••D	734	89.8	90.2	89.6	0.80	37.1	6.9	240	2.2	3.2	0.54	301	57
30	M3GP 225 SMC	3GGP 224 230-••D	731	90.7	91.5	91.3	0.78	61.2	6.3	391	2.3	3.0	0.75	369	59
37	M3GP 250 SMB	3GGP 254 220-••D	737	92.2	91.7	91.0	0.78	74.2	7.5	479	2.3	3.4	1.52	487	59

[1)] Temperature rise class F

[2)] Efficiency class IE1

Technical data for non-sparking and dust ignition protection motors, IE3

Technical data for 400 V 50 Hz can be found in the tables below, data for other voltages on request.

Output kW	Motor type	Product code	Speed r/min	Efficiency IEC 60034--2-1; 2007 Full load 100%	3/4 load 75%	1/2 load 50%	Power factor cos φ	Current I_N A	I_s / I_N	Torque T_N Nm	T_l / T_N	T_b / T_N	Moment of inertia J = 1/4 GD² kgm²	Weight kg	Sound pressure level L_{PA} dB
3000 r/min = 2 poles		**400 V 50 Hz**						**CENELEC-Design**							
30	M3GP 200 MLE	3GGP 201 450-••K	2957	94.1	94.3	93.7	0.87	52.8	7.7	96.8	2.9	3.3	0.22	311	75
37	M3GP 200 MLF	3GGP 201 460-••K	2958	94.6	94.8	94.3	0.86	65.6	8.3	119	3.2	3.5	0.22	311	75
45	M3GP 225 SME	3GGP 221 250-••K	2970	95.0	95.5	94.9	0.87	78.5	7.8	144	3.0	3.6	0.34	401	76
55	M3GP 250 SMD	3GGP 251 240-••K	2977	95.2	95.5	95.0	0.91	91.6	8.1	176	2.6	2.7	0.68	517	75
1500 r/min = 4 poles		**400 V 50 Hz**						**CENELEC-Design**							
30	M3GP 200 MLE	3GGP 202 450-••K	1477	93.7	94.5	94.4	0.83	55.6	6.9	193	3.0	2.8	0.37	317	61
37	M3GP 225 SME	3GGP 222 250-••K	1482	94.6	95.0	94.8	0.88	64.1	7.6	238	2.9	3.3	0.55	399	67
45	M3GP 225 SMF	3GGP 222 260-••K	1479	94.8	95.2	95.0	0.87	78.7	8	290	3.2	3.4	0.59	410	67
55	M3GP 250 SMC	3GGP 252 230-••K	1483	95.3	95.4	95.0	0.86	96.8	7.3	354	2.7	3.4	0.98	518	66
1000 r/min = 6 poles		**400 V 50 Hz**						**CENELEC-Design**							
18.5	M3GP 200 MLC	3GGP 203 430-••K	987	92.5	92.8	92.4	0.84	34.3	8.1	178	3.2	3.4	0.49	300	61
22	M3GP 200 MLD	3GGP 203 440-••K	986	92.9	93.3	92.9	0.84	40.6	8.2	213	3.3	3.4	0.54	310	61
30	M3GP 225 SME	3GGP 223 250-••K	989	94.0	94.2	93.8	0.85	54.1	7.9	289	2.5	3.2	0.92	402	61
37	M3GP 250 SMD	3GGP 253 240-••K	988	94.3	94.7	94.4	0.84	67.4	8.1	357	3.4	3.1	1.74	522	65

Dust ignition protection motors

The following variant codes should be used to order versions for areas where dust is present:

334 - Ex t, dust group IIIB T125 °C, Db, IP6X (non-conductive dust)
335 - Ex t, dust group IIIB T125 °C, Dc, IP5X (non-conductive dust)
336 - Ex t, dust group IIIC T125 °C, Db, IP6X (conductive dust)
337 - Ex t, dust group IIIC T125 °C, Dc, IP6X (conductive dust)

Dimension drawings for non-sparking and dust ignition protection motors

Mechanical dimensions are shown in the table below.

Foot-mounted motor IM 1001, IM B3

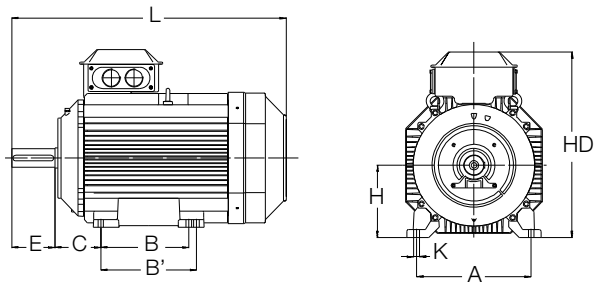

Sizes 80 to 200

Flange-mounted motor IM 3001, IM B5

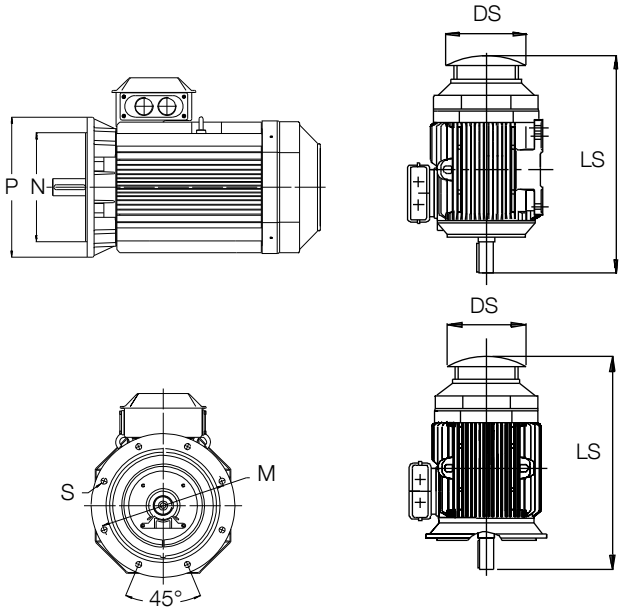

Sizes 225 to 250

Protective roof, variant code 005

9AKK106063 EN 11-2013

	IM1001, IM B3 AND IM 3001, IM B5										IM 1001, IM B3							IM 3001, IM B5				Protective roof		
	D		GA		F		E		L_{max}		A	B	B'	C	HD	K	H	M	N	P	S	DS	LS	
Motor	poles		poles		poles		poles		poles														poles	
size	2	4-8	2	4-8	2	4-8	2	4-8	2	4-8													2	4-8
71	14	14	16	16	5	5	30	30	264	264	112	90	-	45	178	7	71	130	110	160	10	-	273	273
80	19	19	21.5	21.5	6	6	40	40	321	321	125	100	-	50	195	10	80	165	130	200	12	-	331	331
90	24	24	27	27	8	8	50	50	357	357	140	100	125	56	219	10	90	165	130	200	12	-	369	369
100	28	28	31	31	8	8	60	60	381	381	160	140	-	63	247	12	100	215	180	250	15	-	395	395
112	28	28	31	31	8	8	60	60	403	403	190	140	-	70	259	12	112	215	180	250	15	-	417	417
132	38	38	41	41	10	10	80	80	533	533	216	140	178	89	300	12	132	265	230	300	15	-	552	552
160	42	42	45	45	12	12	110	110	680	680	254	210	254	108	421	14.5	160	300	250	350	19	305	731	731
180	48	48	51.5	51.5	14	14	110	110	726	726	279	241	279	121	461	14.5	180	300	250	350	19	346	777	777
200	55	55	59	59	16	16	110	110	821	821	318	267	305	133	528	18.5	200	350	300	400	19	386	872	872
225	55	60	59	64	16	18	110	140	849	879	356	286	311	149	573	18.5	225	400	350	450	19	425	900	930
250	60	65	64	69	18	18	140	140	884	884	406	311	349	168	626	24	250	500	450	550	19	471	935	935

For more information please contact:

www.abb.com/motors&generators

© Copyright 2013 ABB. All rights reserved.
Specifications subject to change without notice.

Power and productivity
for a better world™