OPTIONS FOR ABB DRIVES AND CONVERTERS

HTL Encoder Interface FEN-31

User's manual

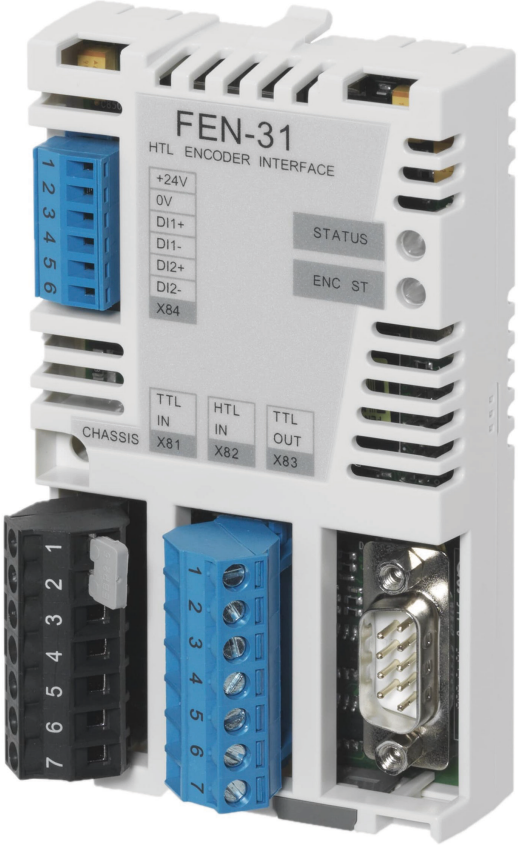

HTL Encoder Interface FEN-31

User's manual

Table of contents

3AUA0000031044 Rev C
EN
Original instructions
EFFECTIVE: 2023-07-14

Table of contents

1 Safety instructions

Contents of this chapter 7
Overview 7
General safety instructions 7

2 Introduction

Contents of this chapter 9
Intended audience 9
Before you start 9

3 Hardware description

Contents of this chapter 11
FEN-31 HTL Encoder Interface 12
FEN-31 connections 13
Isolation areas 14
Compatibility 14

4 Installation

Contents of this chapter 15
Setting the supply voltage 16
Mounting 17
Terminal designations 17
Abbreviations 17
HTL supply voltage pin order (X81) 17
HTL input pin order (X82) 18
TTL encoder emulation output pin order (X83) 18
Digital latch input pin order (X84) 19
General encoder wiring guidelines 19
Wiring for differential push-pull HTL encoder (X81) 20
Wiring for single-ended push-pull HTL encoder (X82) 21
Wiring for single-ended open collector HTL encoder and single ended open emitter HTL encoder 22
Configuring the internal pull-up resistor dip switches 24
TTL emulation output wiring (X83) 25
Position latch digital input wiring (X84) 26
Power consumption and cable length 27
General encoder phasing principle 28

5 Start-up

Contents of this chapter 29
Programming 29

6 Fault tracing

Contents of this chapter 31

Diagnostic LEDs 31
Cable fault diagnosis 31

7 Technical data

Contents of this chapter 33
Dimensions 34
General 34
Connectors: 34
HTL encoder input (X81 and X82) 35
TTL encoder emulation output (X83) 35
Digital inputs for position latch (X84) 35

Further information

1

Safety instructions

Contents of this chapter

The chapter contains the warning symbols and the safety instructions which you must obey when you install or connect an optional module to a drive or converter. If you ignore the safety instructions, injury, death or damage can occur. Read this chapter before you start the installation.

Overview

This chapter states the general safety instructions that must be followed when installing and operating the FEN-31.

In addition to the safety instructions given below, read the complete safety instructions of the specific drive you are working on.

These warnings are intended for all who work on the drive. Ignoring the instructions can cause physical injury or death, or damage the equipment.

General safety instructions

WARNING!
All electrical installation and maintenance work on the drive must be carried out by qualified electricians only.

The drive and adjoining equipment must be properly earthed.

Do not attempt any work on a powered drive. After switching off the mains, always allow the intermediate circuit capacitors 5 minutes to discharge before working on the frequency converter, the motor or the motor cable. Check (with a voltage tester) that the drive is in fact discharged before beginning work.

The motor cable terminals of the drive are at a dangerously high voltage when mains power is applied, regardless of motor operation.

There can be dangerous voltages inside the drive from external control circuits even when the drive mains power is shut off.

Exercise appropriate care when working on the unit.

These warnings are intended for all who work on the drive. Ignoring the instructions can cause physical injury or death, or damage the equipment.

For complete safety instructions see the drive manuals.

2

Introduction

Contents of this chapter

This chapter introduces this manual.

Intended audience

The manual is intended for the people who are responsible for commissioning and using the FEN-31. The reader is expected to have a basic knowledge of electrical fundamentals, electrical wiring practices and how to operate the drive.

Before you start

It is assumed that the drive is installed and the drive power supply is switched off before starting the installation of the extension module. Ensure that all dangerous voltages connected from external control circuits to the inputs and outputs of the drive are switched off.

In addition to conventional installation tools, have the drive manuals available during the installation as they contain important information not included in this manual. The drive manuals are referred to at various points of this document.

3

Hardware description

Contents of this chapter

This chapter contains a short description of the FEN-31 HTL Encoder Interface.

FEN-31 HTL Encoder Interface

FEN-31 is an interface between the control board and an HTL encoder. It supports various types of HTL encoders. A PTC, Pt1000 or KTY temperature sensor can be attached to one of the connections of the FEN-31 interface.

FEN-31 offers an RS-422-standard-compliant TTL encoder emulation output and two digital inputs. It also includes cable fault diagnostics for some HTL encoder types. See the drive *Firmware manual* for details.

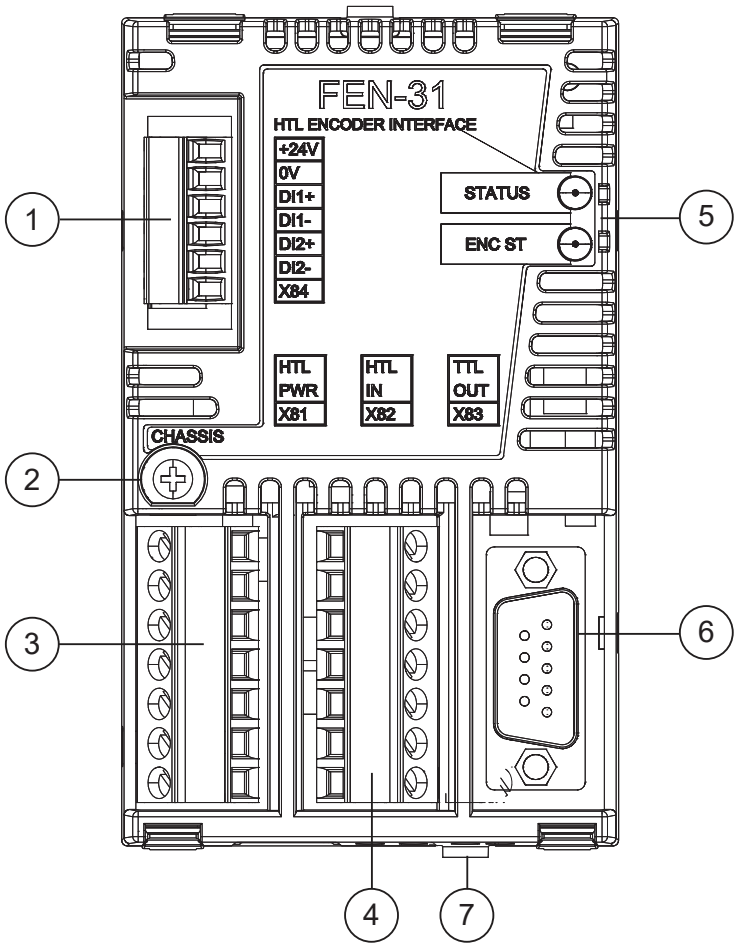

1	Digital latch inputs (X84)
2	Fixing screw
3	HTL encoder supply voltage (X81)
4	HTL encoder input (X82)
5	Diagnostic LEDs
6	TTL emulation output (X83)
7	Locking tab

FEN-31 connections

The following figure shows an overview of the connections of the FEN-31.

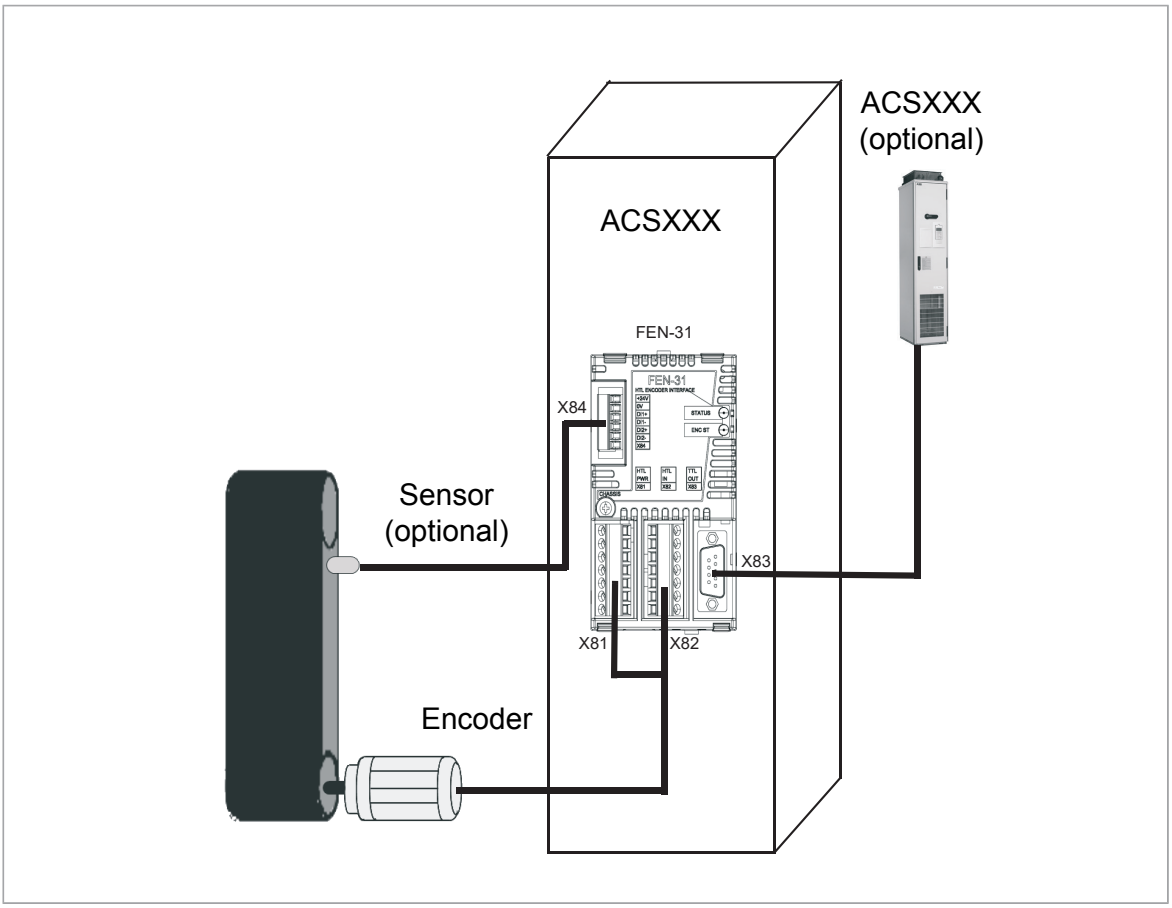

Isolation areas

The following figure describes the different isolation areas of the module.

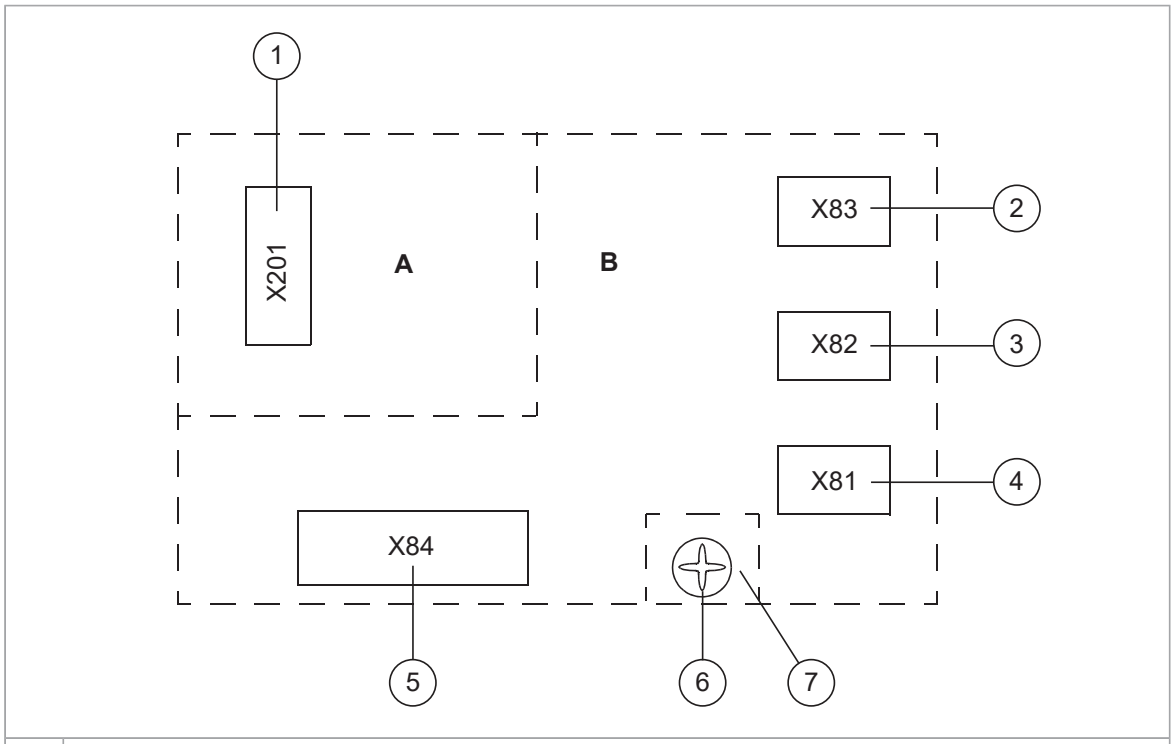

1	Connection to the drive
2	TTL encoder emulation output
3	HTL encoder input
4	HTL encoder supply voltage
5	Digital latches
6	Fixing screw
7	CHASSIS

The shields of connectors X81 and X82 and plug X83 are connected to chassis. The fixing screw connects the chassis to ground.

Compatibility

FEN-31 is compatible with the following encoders:

- Differential push-pull HTL encoders
- Single-ended push-pull HTL encoders
- Open collector HTL encoders
- Open emitter HTL encoders

4

Installation

Contents of this chapter

This chapter contains instructions on installing the HTL Encoder Interface module.

WARNING!
Follow the safety instructions given in this guide and in the drive *Hardware manual*.

Setting the supply voltage

WARNING!
Selecting the wrong supply voltage may damage or break the encoder.

Two supply voltages are available on pins 4 and 5 in connector X81. Only one of them can be used to supply an encoder. The supply voltage is selected by placing a jumper on connector X81 as described in the figure below. The following supply voltages can be selected:

- +15 V DC ± 20% 200mA (max.)
- +24 V DC ± 20% 200mA (max.)

You can also connect an external 10 - 24 V DC power supply to pins 4 and 5 in connector X81. In that case, the jumper must be removed.

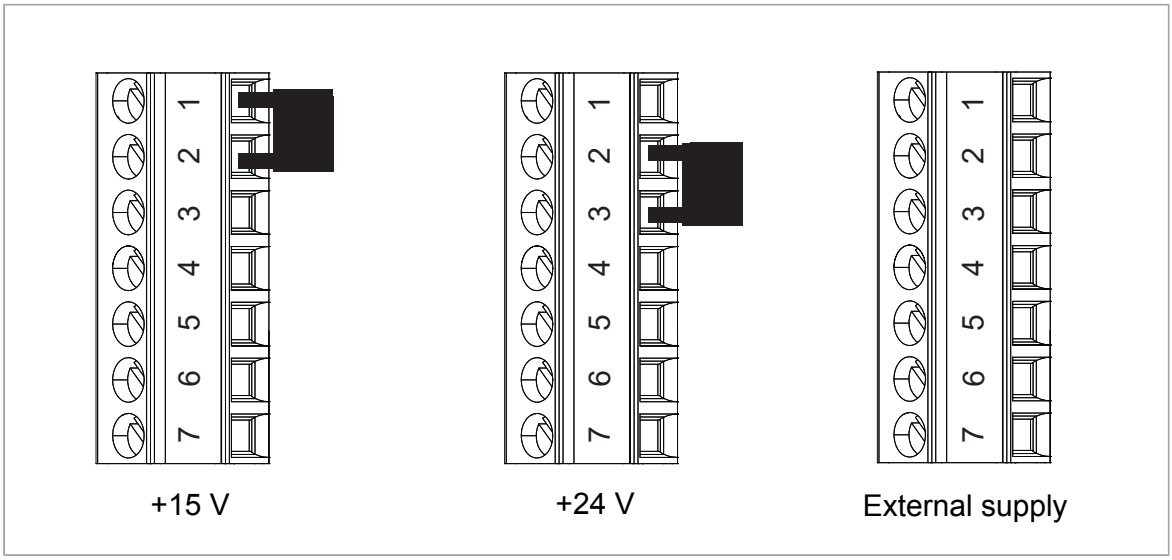

Encoder supply voltage available on pins X81-4 and X81-5 with different jumper settings

Mounting

WARNING!
Before installation, do the electrical safety precautions given in section Safety instructions.

Note: Before mounting the option module, set the supply voltage jumpers as described above.

The option module is to be inserted into the option slot of the drive. See the drive hardware manual for more information.

The module is held in place with plastic retaining clips, a locking tab and one screw. The screw also provides the earthing of the cable shields connected to the module and interconnects the GND signals of the module and the drive.

On installation of the module, the signal and power connection to the drive is automatically made through a 20-pin connector.

Numbers in brackets refer to the layout drawing in section layout.

Mounting procedure:

1. Pull out the locking tab(7)
2. Insert the module carefully into the option slot until the retaining clips lock the module into position
3. Push in the locking tab (7)
4. Fasten the screw (included) to the stand-off.

If you need to remove the adapter module after it has been installed into the drive, use a suitable tool (e.g. small pliers) to carefully pull out the locking tab.

Note: Correct installation of the screw is essential for fulfilling the EMC requirements and for proper operation of the module.

Terminal designations

Abbreviations

AI	Analog input
DI	Digital input
DO	Digital output
PO	Power output

HTL supply voltage pin order (X81)

Pin	Name	Description	Direction
1	+15V_B	PO	Supply voltage
2	VCC / external supply	PO	Encoder supply voltage
3	+24V_B	PO	Supply voltage
4	VCC / external supply	PO	Encoder supply voltage
5	COM_B	-	0V, Common. Used for supply voltage 0 V and temperature sensor 0 V (PTC/Pt1000/KTY_0V).

Pin	Name	Description	Direction
6	PTC/Pt1000/KTY-84	AI	Temperature sensor (nonisolated)
7	GND	-	Shield

HTL input pin order (X82)

Pin	Name	Description	Direction
1	A+	DI	A channel
2	A-	DI	A channel - inverted
3	B+	DI	B channel
4	B-	DI	B channel - inverted
5	Z+	DI	Marker pulse
6	Z-	DI	Marker pulse - inverted
7	GND	-	Shield

TTL encoder emulation output pin order (X83)

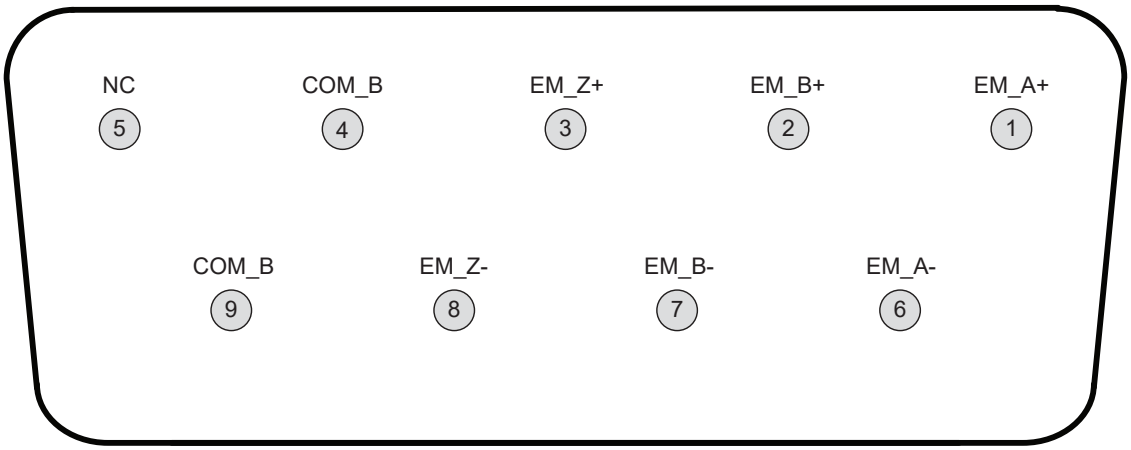

Pin	Name	Description	Direction
1	EM_A+	DO	Channel A+
2	EM_B+	DO	Channel B+
3	EM_Z+	DO	Channel Z+
4	COM_B		0V, Common
5	NC		Not connected
6	EM_A-		Channel A-
7	EM_B-		Channel B-
8	EM_Z-		Channel Z-
9	COM_B		0V, Common
-	Shield		Chassis

Digital latch input pin order (X84)

Pin	Name	Description	Direction
1	+24V_B	PO	Supply voltage
2	COM_B		Common
3	DI_1+	DI	Latch signal 1
4	DI_1-		Latch signal 1 return
5	DI_2+	DI	Latch signal 2
6	DI_2-		Latch signal 2 return

General encoder wiring guidelines

The encoders should be connected to the encoder interface module with a shielded instrumentation cable, preferably with twisted pairs. See the encoder manual for additional requirements. To prevent the encoder inputs from being disturbed, the cable shield must be connected to the chassis. The connection is made automatically through the metal hood of the plug, if the cables are connected through the cable clamp of the plug.

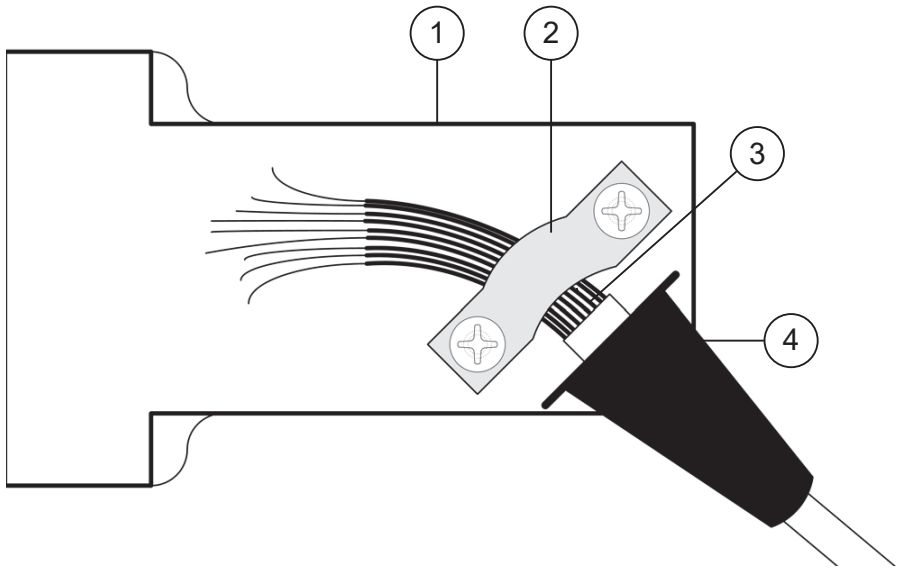

1	Metal hood
2	Cable clamp
3	Cable shield
4	Cable bushing

Note: Do not route the encoder cables parallel to power (e.g. motor) cables.

Tightening torque is 0.3 Nm (2.7 lbf·in.) for the plugs.

The allocation of cable pairs is described for each connector in the following sections.

WARNING!
You can connect a motor temperature sensor to the encoder module only if there is double or reinforced insulation between the live parts of the motor and the sensor. The module does not provide a safe isolation from the drive. Refer to the drive manuals for more information.

Wiring for differential push-pull HTL encoder (X81)

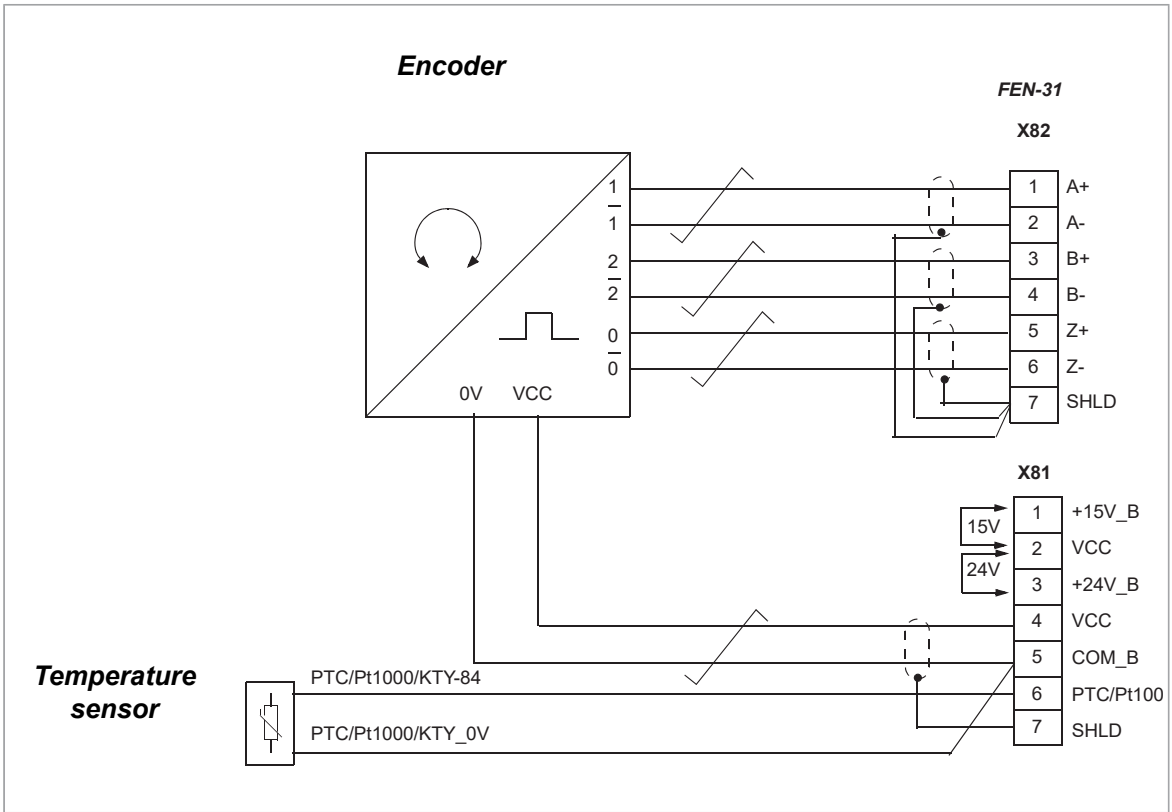

Cable pair number	Signals name	Connector plug and pin number
1	A+	X82-1
	A-	X82-2
2	B+	X82-3
	B-	X82-4
3	Z+	X82-5
	Z-	X82-6
4	VCC	X81-4
	COM_B	X81-5

Note: If possible, connect encoder cable shield on motor side. When encoder cable shield is connected on motor side, do not connect encoder cable shield to FEN.

Wiring for single-ended push-pull HTL encoder (X82)

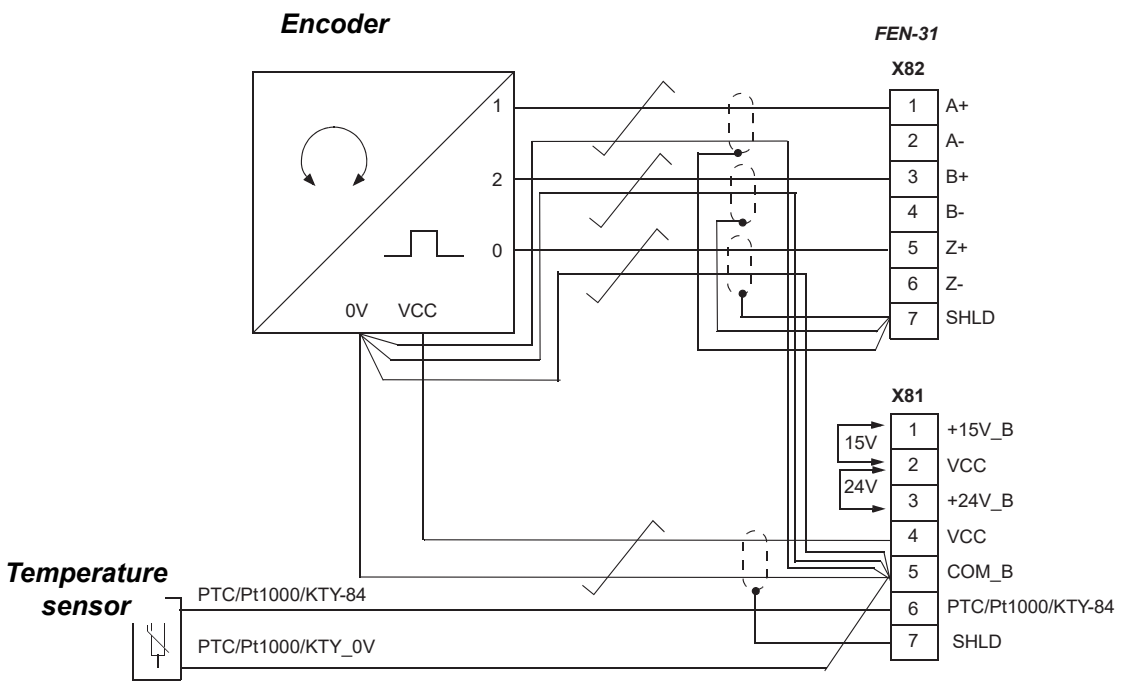

Signals name	Connector plug and pin number
A+	X82-1
B+	X82-3
Z+	X82-5
VCC	X81-4
COM_B	X81-5

Note: If possible, connect encoder cable shield on motor side. When encoder cable shield is connected on motor side, do not connect encoder cable shield to FEN.

Wiring for single-ended open collector HTL encoder and single ended open emitter HTL encoder

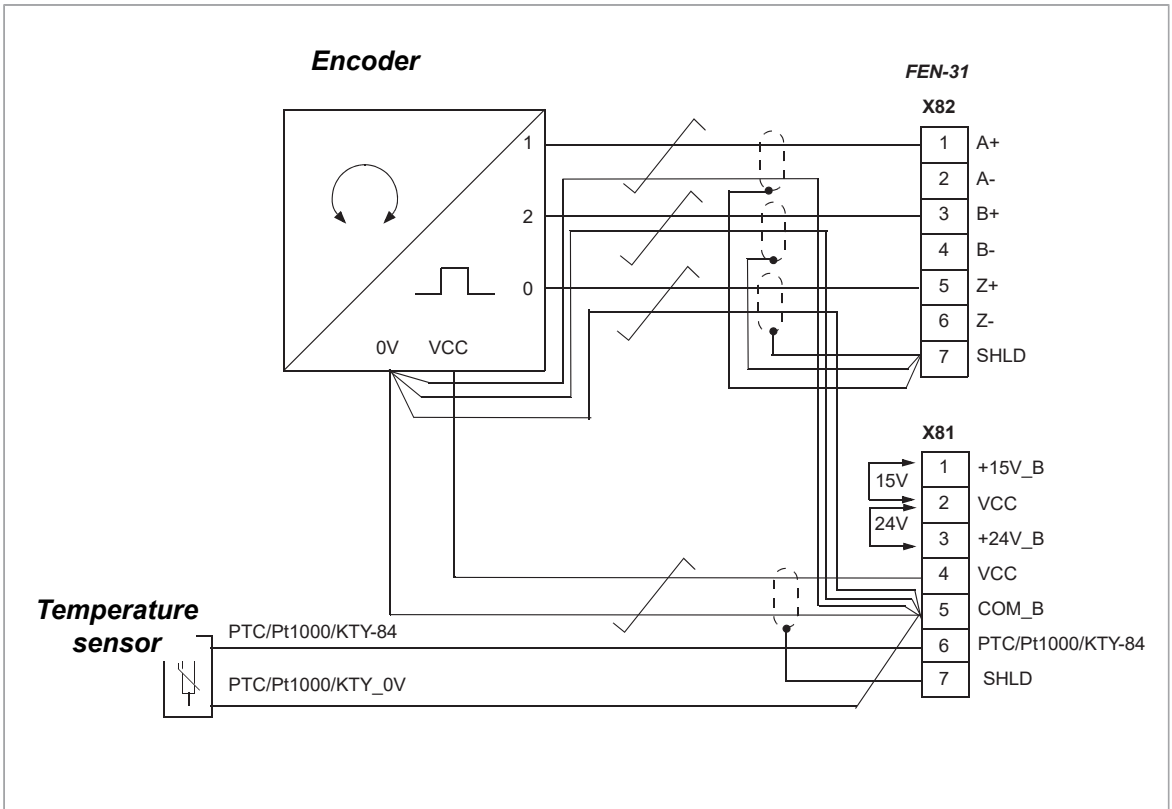

Signals name	Connector plug and pin number
A+	X82-1
B+	X82-3
Z+	X82-5
VCC	X81-4
COM_B	X81-5

Note: If possible, connect encoder cable shield on motor side. When encoder cable shield is connected on motor side, do not connect encoder cable shield to FEN.

To use single-ended open collector and open emitter HTL encoders, the interface unit needs to have pull-up resistors configured.

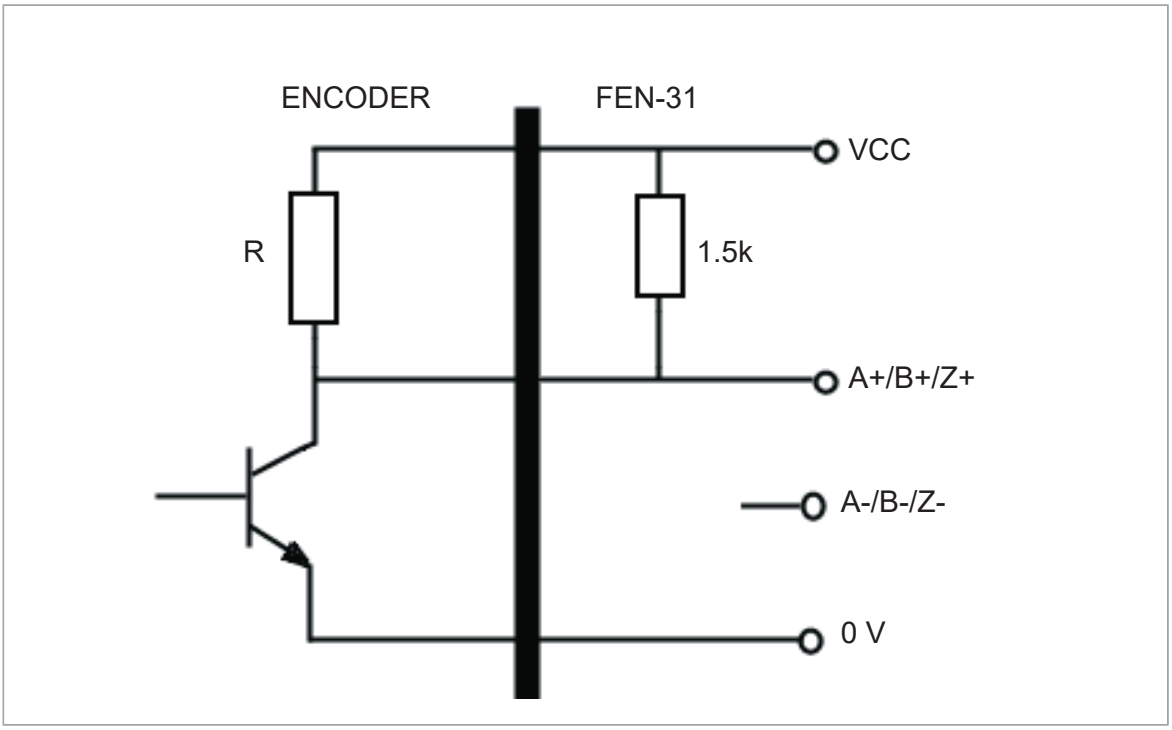

For open collector HTL encoder, the OUT+ channel (A+/B+/Z+) is actively driven low when the transistor closes the circuit. When the transistor opens the circuits, the signal line is passively pulled high by the 1.5 kilo-ohm load resistor in FEN-31.

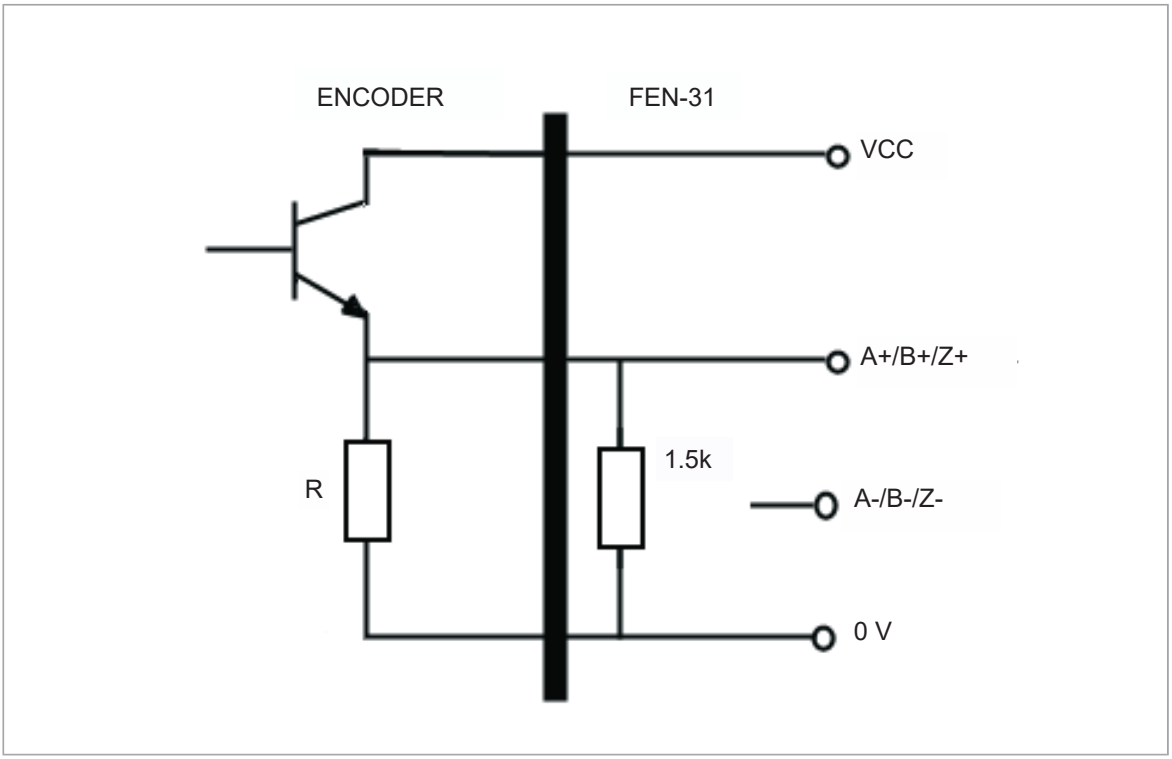

For open emitter HTL encoder, the OUT+ channel (A+/B+/Z+) is actively driven high when the transistor closes the circuit. When the transistor opens the circuits, the signal line is passively pulled low by the 1.5 kilo-ohm load resistor in FEN-31.

Configuring the internal pull-up resistor dip switches

In FEN-31, a 1.55 kΩ resistor is connected to each signal line (A+, B+, Z+) from one end and the other end is, by default, floating. These floating ends can be connected via DIP switches between connectors X81 and X82.

DIP switches 1, 2, and 3 connect the floating ends of the resistors. Switch 4 selects whether the resistor ends (connected together) are further connected to 0V or VCC (ground or supply voltage).

Note: To access the DIP switches, the FEN-31 cover has to be removed.

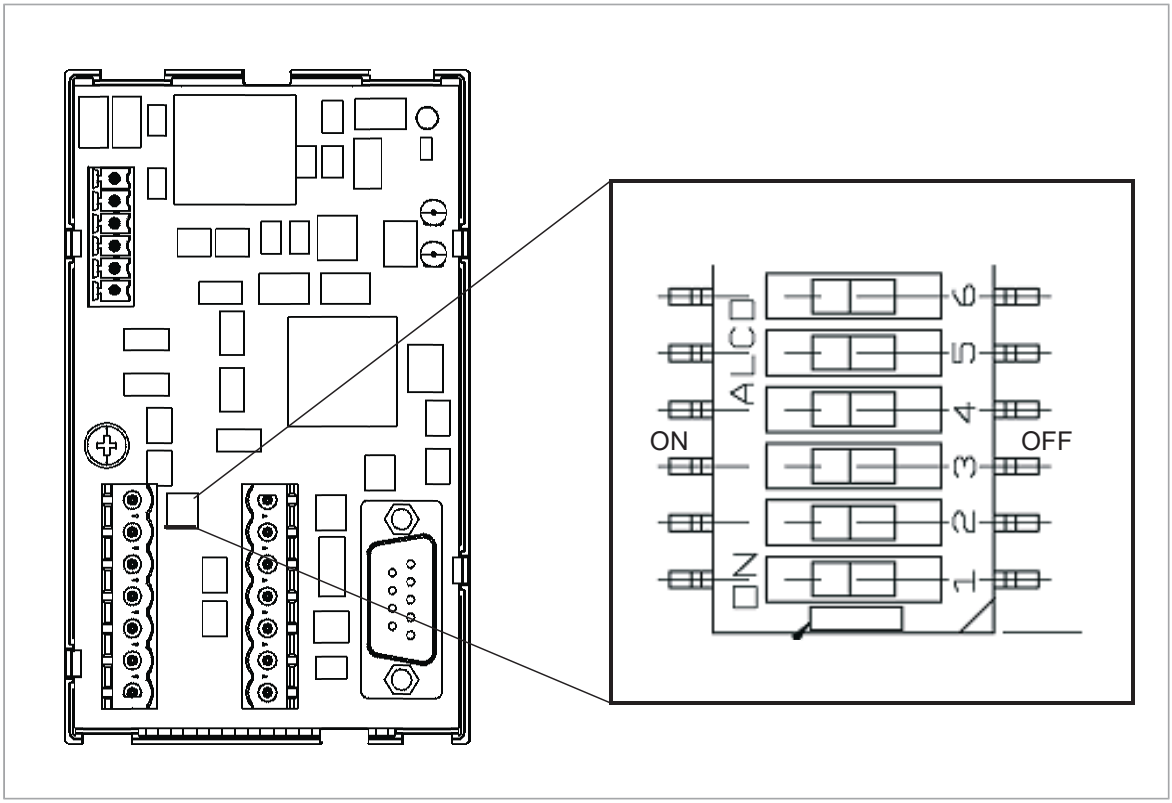

Note: The DIP switches are OFF by default. Turn them ON only if an encoder that specifically needs a pull-up or pull-down resistor is used.

The configuration of the DIP switches is shown in the table below:

Encoder type	1	2	3	4	Resistors connected	Notes
Differential push-pull	off	off	off	off	no	Default setting
Single-ended push-pull	off	off	off	off	no	Default setting
Open collector (sinking)	on	on	on	off	yes	Resistors pull up (A+, B+, Z+)
Open emitter	on	on	on	on	yes	Resistors pull down (A+, B+, Z+)

TTL emulation output wiring (X83)

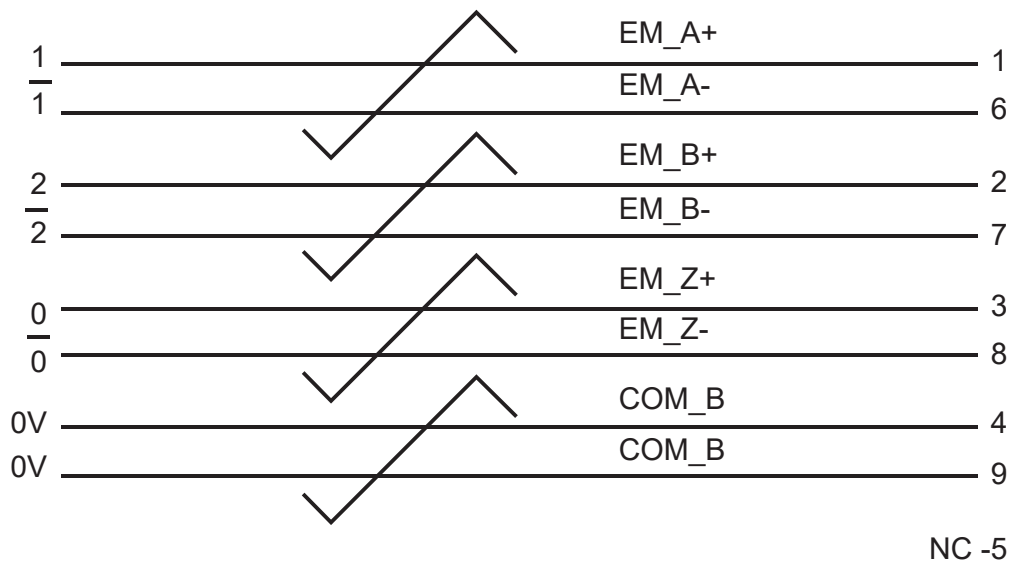

Cable pair number	Signals name	Connecting plug pin number (9-pin)
1	EM_A+	1
	EM_A-	6
2	EM_B+	2
	EM_B-	7
3	EM_Z+	3
	EM_Z-	8
4	COM_B	4
	COM_B	9

Position latch digital input wiring (X84)

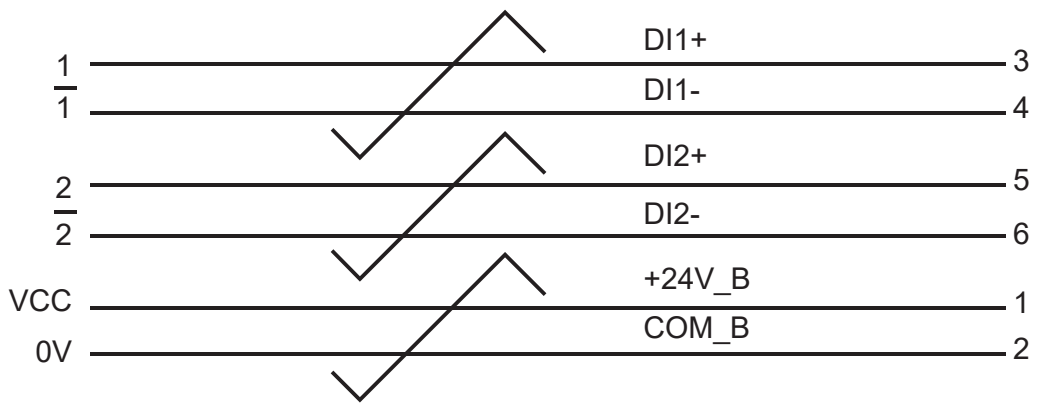

Cable pair number	Signals name	Connecting header pin number (6-pins)
1	+24V_B	1
	COM_B	2
2	DI_1+	3
	DI_1-	4
3	DI_2+	5
	DI_2-	6

Power consumption and cable length

The power consumption of the module depends on many factors, eg, max. speed of the motor, encoder pulse number per revolution, encoder cable length and leakage capacitance. The following figure shows the approximate power consumption of an encoder with differential outputs, based on actual measurements.

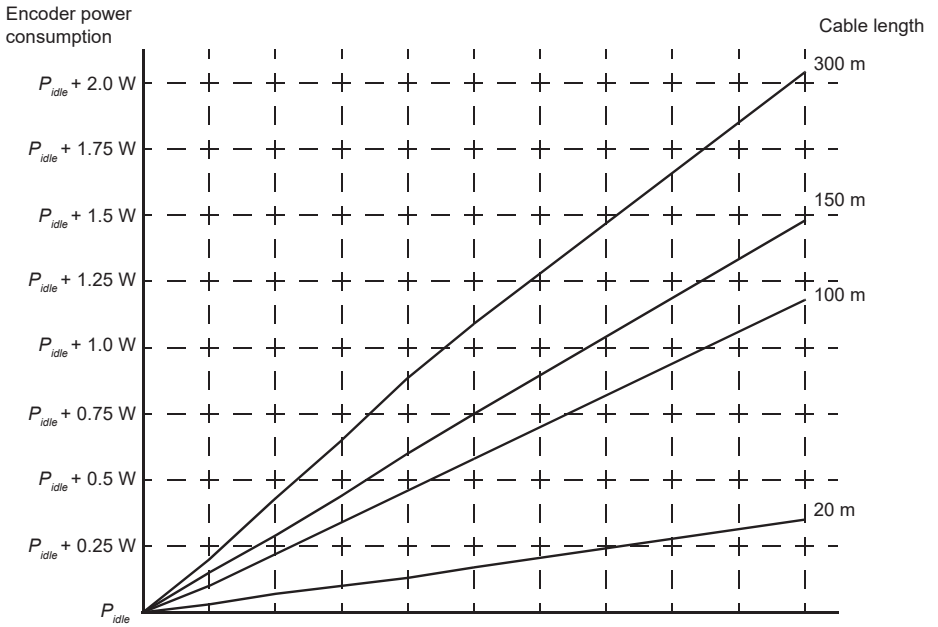

EPN = 1024 ppr:	0	300	600	900	1200	1500	1800	2100	2400	2700	3000
EPN = 2048 ppr:	0	150	300	450	600	750	900	1050	1200	1350	1500
EPN = 512 ppr:	0	600	1200	1800	2400	3000	3600	4200	4800	5400	6000

Motor speed (rpm)

EPN = Encoder pulse number

P_{idle} = Encoder power consumption when idle. See encoder documentation.

General encoder phasing principle

When the encoder is connected correctly, running the drive in the Forward (positive speed reference) direction should produce a positive encoder feedback.

On incremental encoders, the two output channels, usually marked 1 and 2 or A and B, are 90° (electrical) apart from each other. When rotated clockwise, most encoders have channel 1 leading channel 2 as illustrated below. Determine the leading channel by referring to the encoder documentation or by measuring with an oscilloscope.

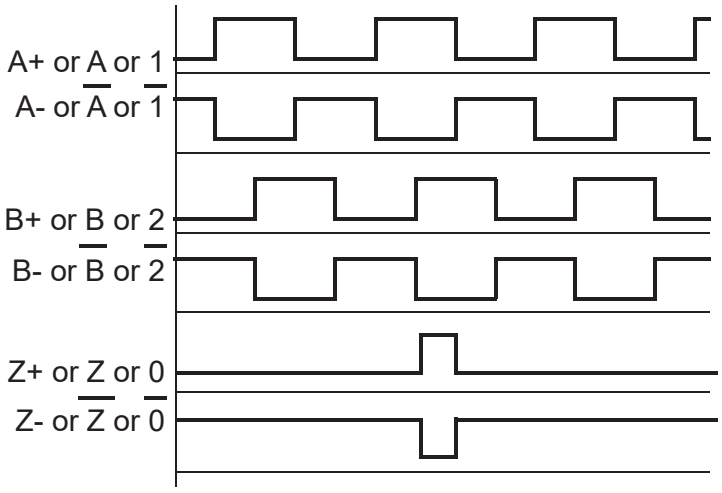

The encoder output channel that leads when the drive runs Forward should be connected to FEN-31 input A, the output channel that trails to FEN-31 input B.

The zero reference output channel (usually marked 0, N or Z) needs to be connected in positioning applications only.

5

Start-up

Contents of this chapter

This chapter contains instructions on starting up the Encoder Interface module.

Programming

The FEN-31 is programmed through drive parameters. These parameters must be checked and adjusted according to the encoder data sheet. For further information, see the drive Firmware Manual.

6

Fault tracing

Contents of this chapter

This chapter shows how to trace faults with the status LEDs on the HTL Encoder Interface module.

Diagnostic LEDs

FEN-31 is equipped with two diagnostic LEDs. The STATUS LED describes the status of FEN-31 and the ENC ST LED the status of the encoders. Description of the LED signals is presented below.

	Colour	Description
STATUS LED	Green	OK
	Orange	Not initialized or communication fault to control unit
	Red	Not in use
ENC ST LED	Green	Encoder OK
	Orange	Encoder fault

Note: When using FEN-31 with ACS880 the status of ENC ST led is updated after encoder fault reset is done.

Cable fault diagnosis

Cable fault diagnostics are implemented for the HTL encoder input. The cable fault diagnostics function samples voltage on each of the six signal connections to detect a missing signal wire connection.

For details about HTL encoders supported by the cable fault diagnostics function, see the drive *Firmware manual*.

7

Technical data

Contents of this chapter

This chapter contains the technical data of the HTL Encoder Interface module.

Dimensions

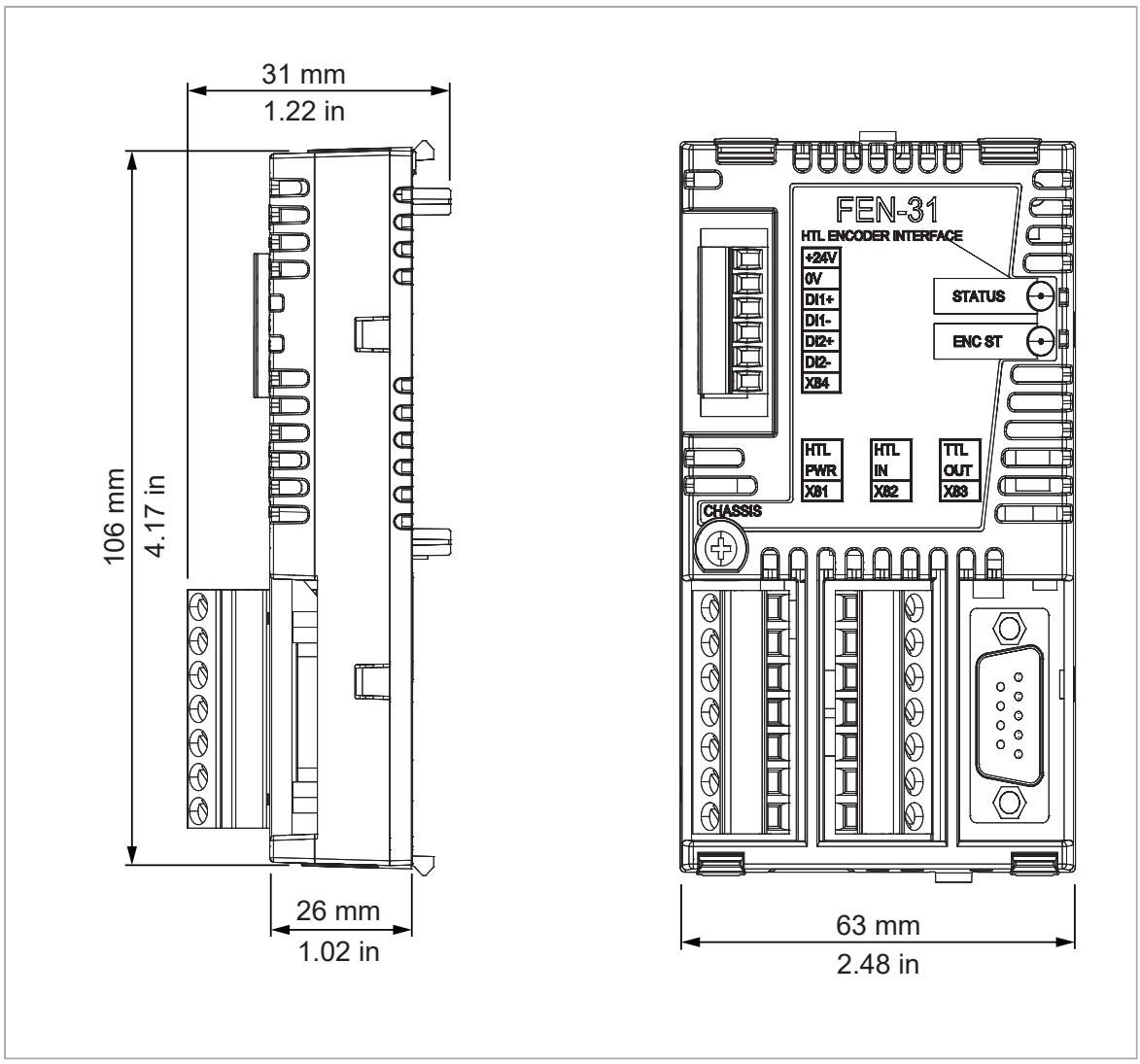

General

Max. power consumption	350 mA at 24 V (Max. combined power consumption of encoders, latches and cabling 5W)
Degree of protection	IP20
Ambient conditions	The applicable ambient conditions specified for the drive in its Hardware manual are in effect.

Connectors:

- 20-pin socket
- 2 x 7-pin detachable plugs, max 2.5 mm^2 wire, tightening torque 0.5 N·m (5 lbf·in)
- 9-pin D-Sub
- 6-pin detachable plug, max 1.5 mm^2 wire, tightening torque 0.3 N·m (3 lbf·in)

HTL encoder input (X81 and X82)

Supply voltages	+15 V DC ± 20% 200mA (max.) - HTL encoders
	+24 V DC ± 20% 200mA (max.) - HTL encoders
	External power supply, if connected, has to be in the range of 10-24 V DC
Channels A, B, and Z supported	Signal frequencies up to 300kHz can be detected by the HTL encoder input.
	With long cables and/or single-ended encoders it may be difficult to convey high signal frequencies reliably.
	Signal levels: “0” < 3.5 V and “1” > 7.5 V
Supported encoder types	Differential Push-Pull HTL encoders, supply voltage 10 - 24 V
	Single-ended Push-Pull HTL encoders, supply voltage 15 - 24 V
	Open collector HTL encoders, supply voltage 15 - 24 V
	Open emitter HTL encoders, supply voltage 15 - 24 V
Supported cable lengths	300 m for differential push-pull HTL encoders
	200 m for single-ended push-pull HTL encoders
	100 m for open collector/open emitter HTL encoders
Performance	Speed range: -32768...32767 rpm
	Speed resolution: 0.04 RPM (24 bits)
	Position resolution: 16 M/rev (24 bits)
	Position accuracy: 4x pulse count/rev
Isolation	Isolated together with digital inputs

TTL encoder emulation output (X83)

Emulation	Supports emulation of TTL incremental encoder, 1...65535 pulses/rev, reference mark
CH A, CH B, CH Z	RS-422/485, 500 kHz (max)
Maximum cable length	100 m
Performance	Speed range: -32768...32767 rpm
	Position resolution: 4x pulse count/rev
Isolation	Electrically isolated from the HTL input and control board

Digital inputs for position latch (X84)

Output voltage	+24 V DC ±15%, short-circuit proof
Signal levels	< 5 V = 0, > 15 V = 1
Isolation	Isolated together with TTL encoder input

Further information

Product and service inquiries

Address any inquiries about the product to your local ABB representative, quoting the type designation and serial number of the unit in question. A listing of ABB sales, support and service contacts can be found by navigating to www.abb.com/searchchannels.

Product training

For information on ABB product training, navigate to new.abb.com/service/training.

Providing feedback on ABB manuals

Your comments on our manuals are welcome. Navigate to new.abb.com/drives/manuals-feedback-form.

Document library on the Internet

You can find manuals and other product documents in PDF format on the Internet at www.abb.com/drives/documents.

a311 (working)
PDF-A4
Created: 2023-08-02, 09:55:25

www.abb.com/drives

3AUA0000031044C

© Copyright 2023 ABB. All rights reserved.
Specifications subject to change without notice.

3AUA0000031044 Rev C (EN) 2023-07-14