ABB DRIVES

ACH180 and ACS180 drives

Recycling instructions and environmental information

Related documents

You can find manuals and other product documents in PDF format on the Internet. See section Document library on the Internet on the inside of the back cover. For manuals not available in the Document library, contact your local ABB representative.

The codes and links below open online listings of the manuals applicable to the product:

ACS180 link list

ACH180 link list

Recycling instructions and environmental information

Table of contents

© Copyright 2023 ABB. All rights reserved.

3AXD50000613342 Rev C
EN
EFFECTIVE: 2023-05-31

Table of contents

1. Introduction to the manual

Contents of this chapter . . . 7
Applicability . . . 7
Target audience . . . 7
Abbreviations . . . 8
Frame size . . . 8
Disclaimer . . . 8

2. Product materials

Contents of this chapter . . . 9
Materials of frame R0 (230 V) . . . 10
Materials of frame R0 (400 V) . . . 11
Materials of frame R1 (230 V) . . . 12
Materials of frame R1 (400 V) . . . 13
Materials of frame R2 (230 V) . . . 14
Materials of frame R2 (400 V) . . . 15
Materials of frame R3 (230 V) . . . 16
Materials of frame R3 (400 V) . . . 17
Materials of frame R4 (230 V) . . . 18
Materials of frame R4 (400 V) . . . 19
Package . . . 19
Product manuals and sales brochures . . . 20

3. Manufacturing and use

Manufacturing . . . 21
Use . . . 21

4. Product disposal

Contents of this chapter . . . 23
Disposal . . . 23
Dismantling . . . 24
  Manual dismantling . . . 24
  Mechanical shredding . . . 24
ABB list of prohibited and restricted substances . . . 24
Recycling information in accordance with the WEEE . . . 24
Recycling example . . . 26
EU Directives and regulations . . . 26

Further information

1

Introduction to the manual

Contents of this chapter

This chapter describes the contents of the manual. It contains information on the applicability and target audience, disclaimer and a list of abbreviations.

Applicability

This document covers the environmental information of the following products:

- ACH180 drives
- ACS180 drives.

Target audience

This document is intended for ABB customers and for professional recyclers.

Abbreviations

ABS	Acrylonitrile-butadiene-styrene
GF	Glass fiber
PBT	Polybutylene terephthalate
PC	Polycarbonate
PET	Polyethylene terephthalate
TPE	Thermoplastic elastomer

Frame size

This manual covers all different frame sizes of the product family. The frame size is marked on the type designation label of the drive. The frame size is also shown in the rating tables for each drive type. The rating tables are in the drive hardware manual.

Disclaimer

The information presented in this publication does not form part of any quotation or contract, is believed to be accurate and reliable and may be changed without notice. No liability will be accepted by the publisher for any consequences of its use. Publication thereof does not convey nor imply any license under patent - or other industrial or intellectual - property rights.

2

Product materials

Contents of this chapter

This chapter describes the main components and product materials of the ACH180 and ACS180 drives.

Materials of frame R0 (230 V)

The main components are shown in the figure below.

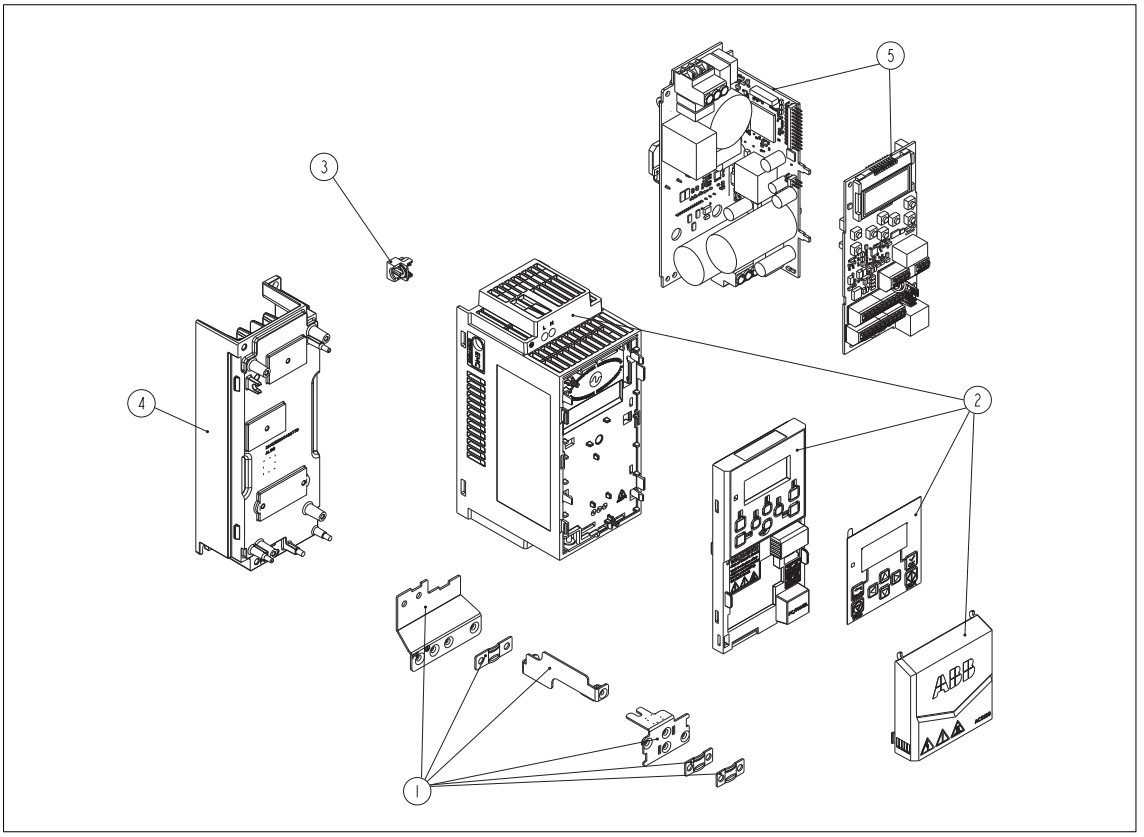

Part No.	Name	Qty	Materials	Weight / g
1	Sheet metal parts	6	Zn-coated Fe	50
2	Housing / cover parts	4	Plastic: ABS PC TPE PET	180
3	Reinforced plastic parts	1	Plastic: PC+10% GF	1
4	Heat sink and other aluminum parts	1	Aluminum: ALSI8	377
5	Printed circuit board	3	Various materials, electronic components	370
			Total weight	**978 g**

Materials of frame R0 (400 V)

The main components are shown in the figure below.

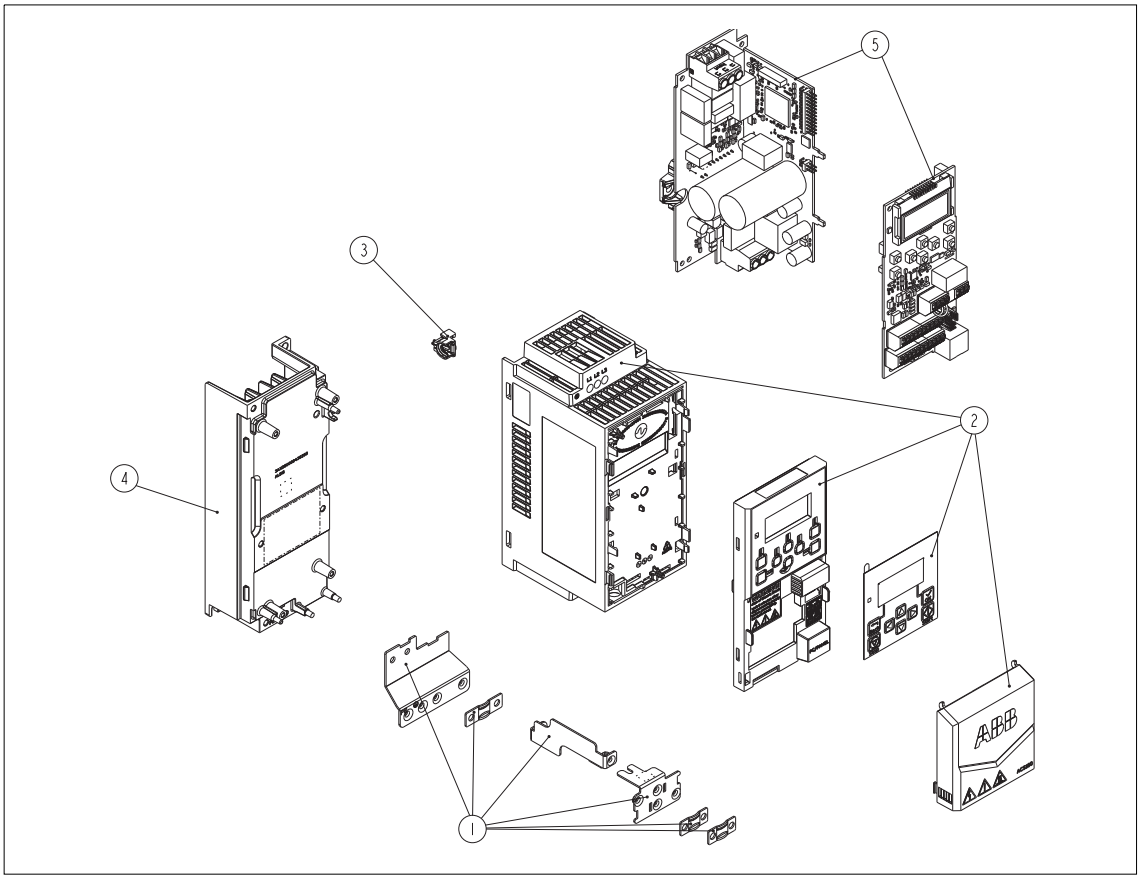

Part No.	Name	Qty	Materials	Weight / g
1	Sheet metal parts	6	Zn-coated Fe	50
2	Housing / cover parts	4	Plastic: ABS PC TPE PET	180
3	Reinforced plastic parts	1	Plastic: PC+10% GF	1
4	Heat sink and other aluminum parts	1	Aluminum: ALSI8	375
5	Printed circuit board	3	Various materials, electronic components	313
			Total weight	**919 g**

Materials of frame R1 (230 V)

The main components are shown in the figure below.

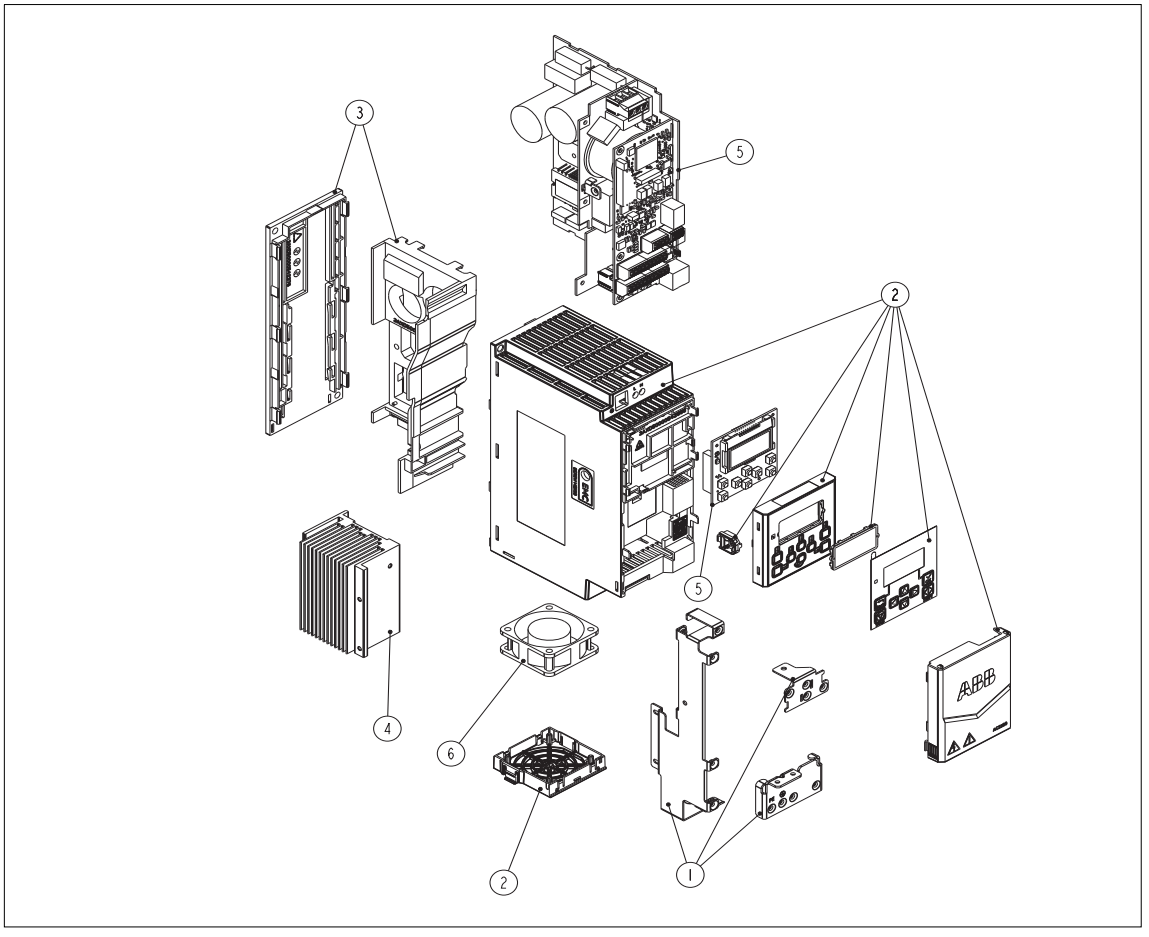

Part No.	Name	Qty	Materials	Weight / g
1	Sheet metal parts	3	Zn-coated Fe	105
2	Housing / cover parts	7	Plastic: ABS PC TPE PET	250
3	Reinforced plastic parts	2	Plastic: PC+10% GF	135
4	Heat sink and other aluminum parts	1	Aluminum: AW 6060: Al Mg Si	238
5	Printed circuit board	2	Various materials, electronic components	500
6	Axial fan	1	Various materials, plastic parts: PBT, aluminum alloy	43
			Total weight	**1271 g**

Materials of frame R1 (400 V)

The main components are shown in the figure below.

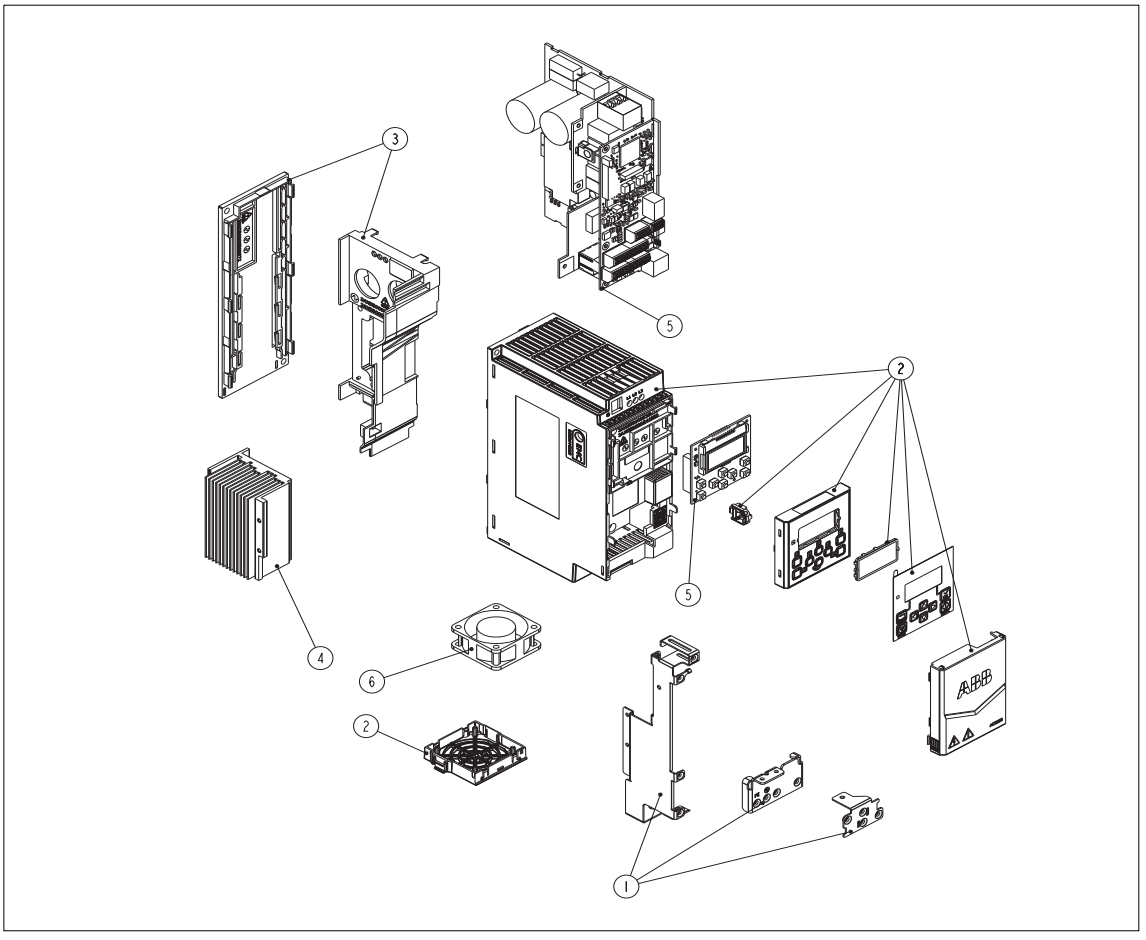

Part No.	Name	Qty	Materials	Weight / g
1	Sheet metal parts	3	Zn-coated Fe	105
2	Housing / cover parts	7	Plastic: ABS PC TPE PET	250
3	Reinforced plastic parts	2	Plastic: PC+10% GF	135
4	Heat sink and other aluminum parts	1	Aluminum: AW 6060: Al Mg Si	237
5	Printed circuit board	2	Various materials, electronic components	419
6	Axial fan	1	Various materials, plastic parts: PBT, aluminum alloy	43
			Total weight	**1189 g**

Materials of frame R2 (230 V)

The main components are shown in the figure below.

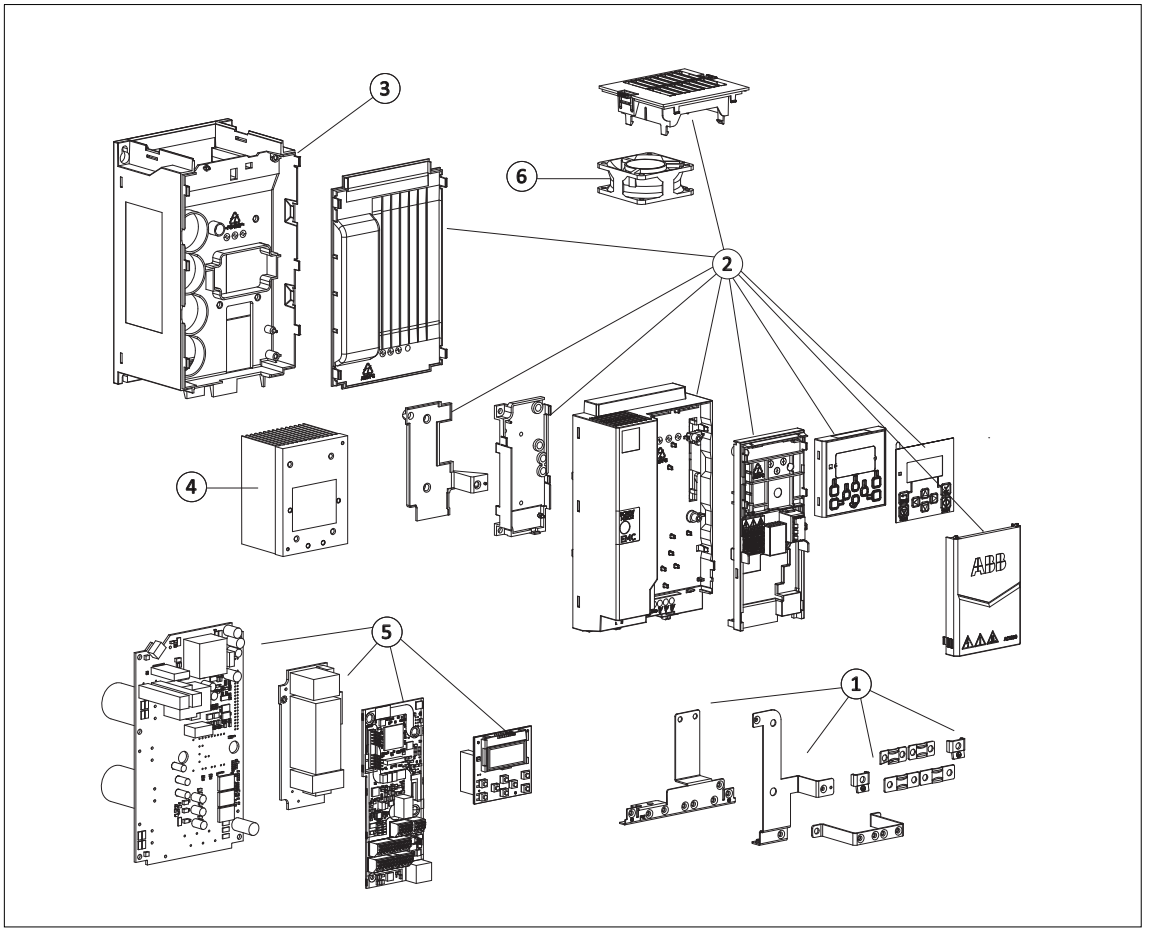

Part No.	Name	Qty	Materials	Weight / g
1	Sheet metal parts	9	Zn-coated Fe	56
2	Housing / cover parts	9	Plastic: ABS PC TPE PET	381
3	Reinforced plastic parts	1	Plastic: PC+10% GF	228
4	Heat sink and other aluminum parts	1	Aluminum: AW 6060: Al Mg Si	405
5	Printed circuit board	4	Various materials, electronic components	690
6	Axial fan	1	Various materials, plastic parts: PBT, aluminum alloy	73
			Total weight	**1833 g**

Materials of frame R2 (400 V)

The main components are shown in the figure below.

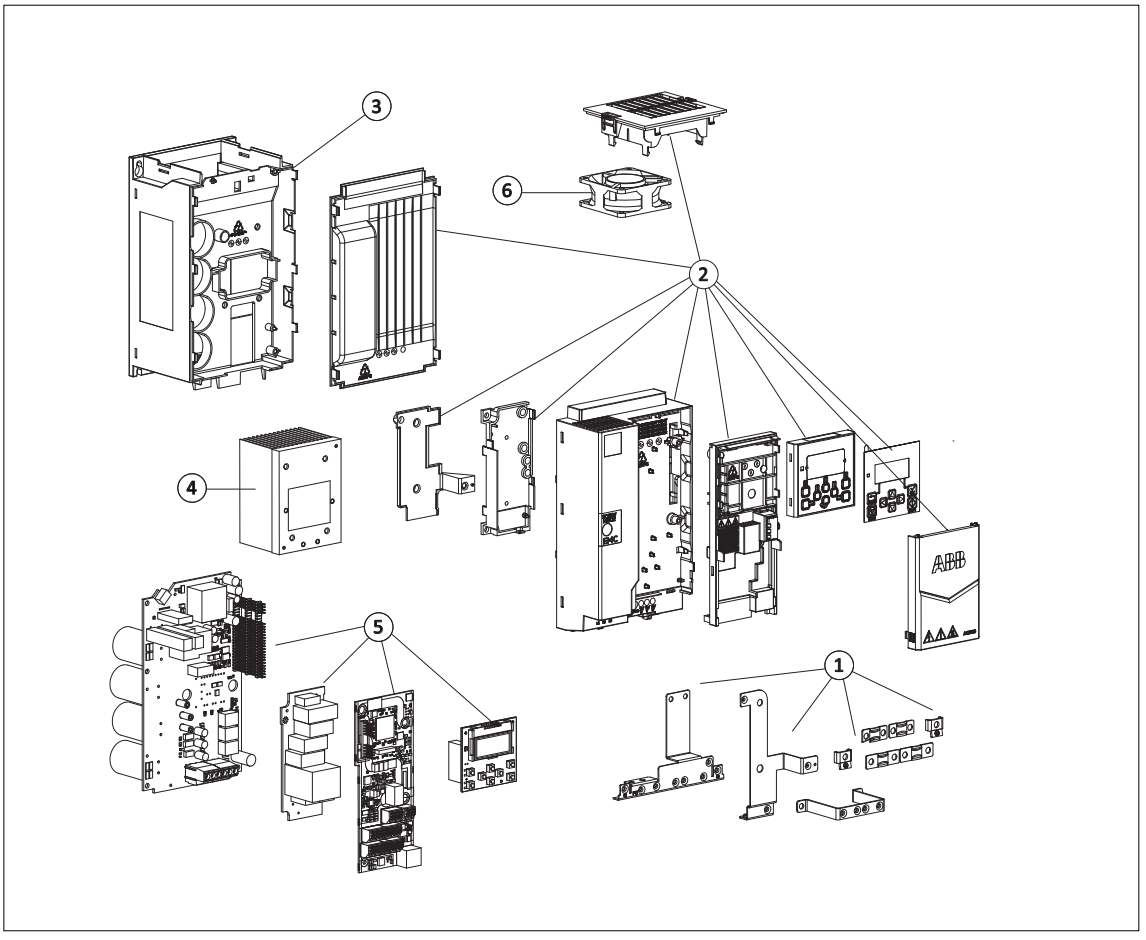

Part No.	Name	Qty	Materials	Weight / g
1	Sheet metal parts	9	Zn-coated Fe	56
2	Housing / cover parts	9	Plastic: ABS PC TPE PET	381
3	Reinforced plastic parts	1	Plastic: PC+10% GF	228
4	Heat sink and other aluminum parts	1	Aluminum: AW 6060: Al Mg Si	405
5	Printed circuit board	4	Various materials, electronic components	686
6	Axial fan	1	Various materials, plastic parts: PBT, aluminum alloy	73
			Total weight	**1829 g**

Materials of frame R3 (230 V)

The main components are shown in the figure below.

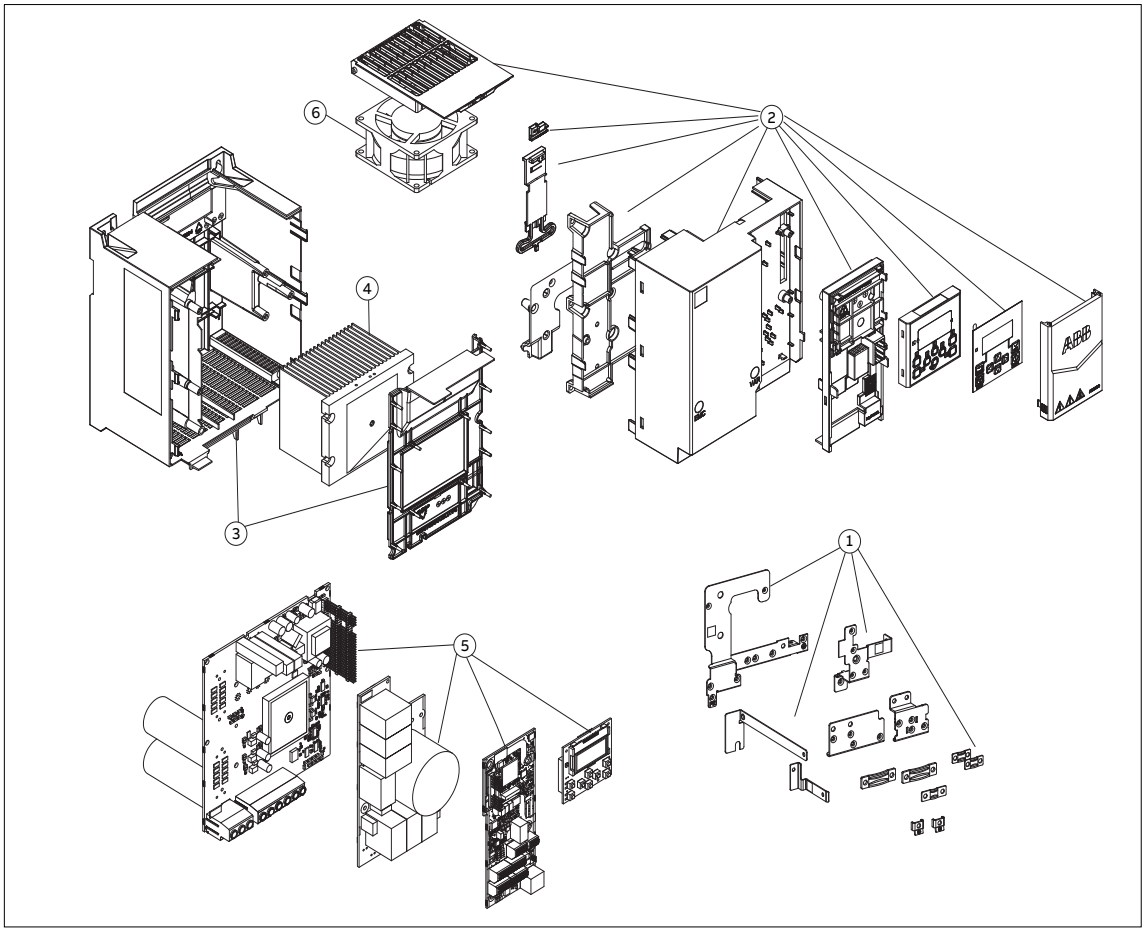

Part No.	Name	Qty	Materials	Weight / g
1	Sheet metal parts	13	Zn-coated Fe	175
2	Housing / cover parts	10	Plastic: ABS PC TPE PET	433
3	Reinforced plastic parts	2	Plastic: PC+10% GF	464
4	Heat sink and other aluminum parts	1	Aluminum: AW 6060: Al Mg Si	660
5	Printed circuit board	4	Various materials, electronic components	1276
6	Axial fan	1	Various materials, plastic parts: PBT, aluminum alloy	160
			Total weight	**3168 g**

Materials of frame R3 (400 V)

The main components are shown in the figure below.

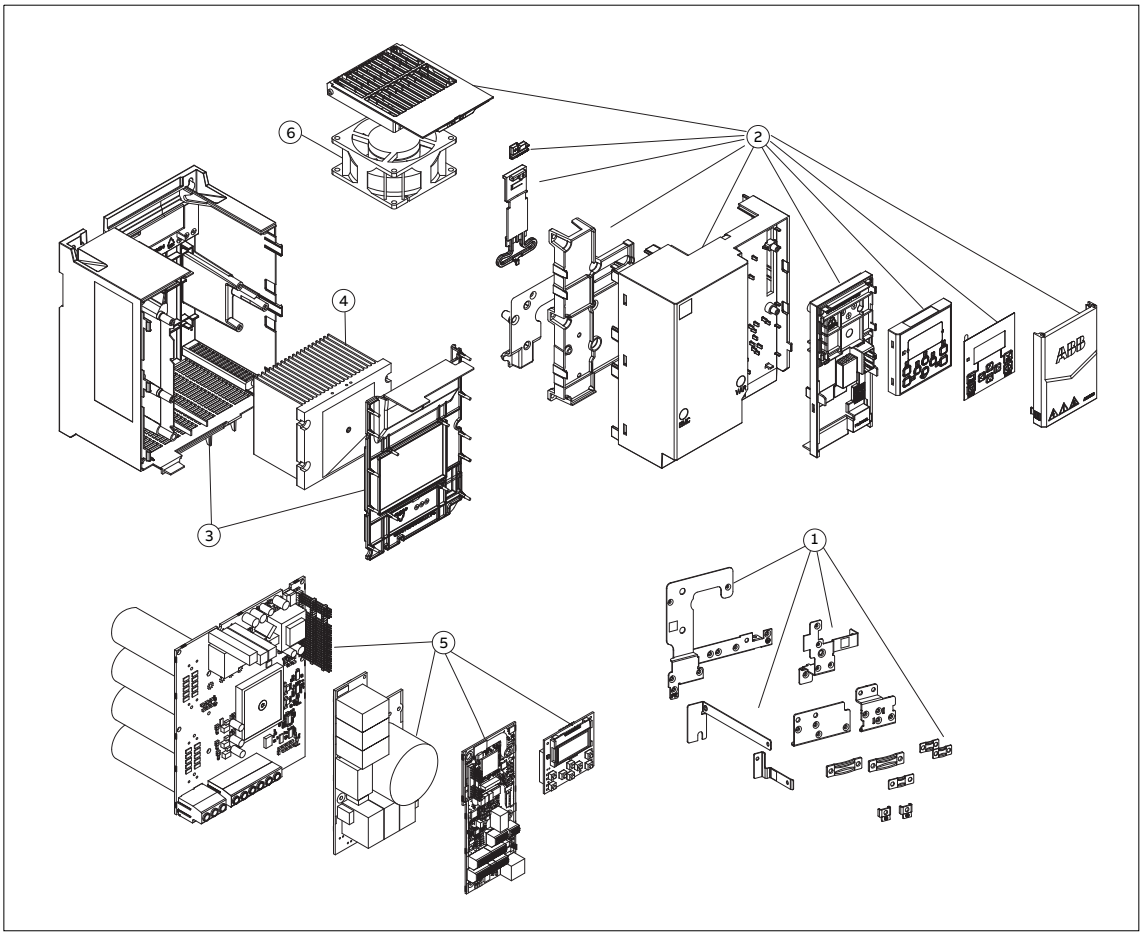

Part No.	Name	Qty	Materials	Weight / g
1	Sheet metal parts	13	Zn-coated Fe	175
2	Housing / cover parts	10	Plastic: ABS PC TPE PET	433
3	Reinforced plastic parts	2	Plastic: PC+10% GF	464
4	Heat sink and other aluminum parts	1	Aluminum: AW 6060: Al Mg Si	660
5	Printed circuit board	4	Various materials, electronic components	1506
6	Axial fan	1	Various materials, plastic parts: PBT, aluminum alloy	160
			Total weight	**3398 g**

Materials of frame R4 (230 V)

The main components are shown in the figure below.

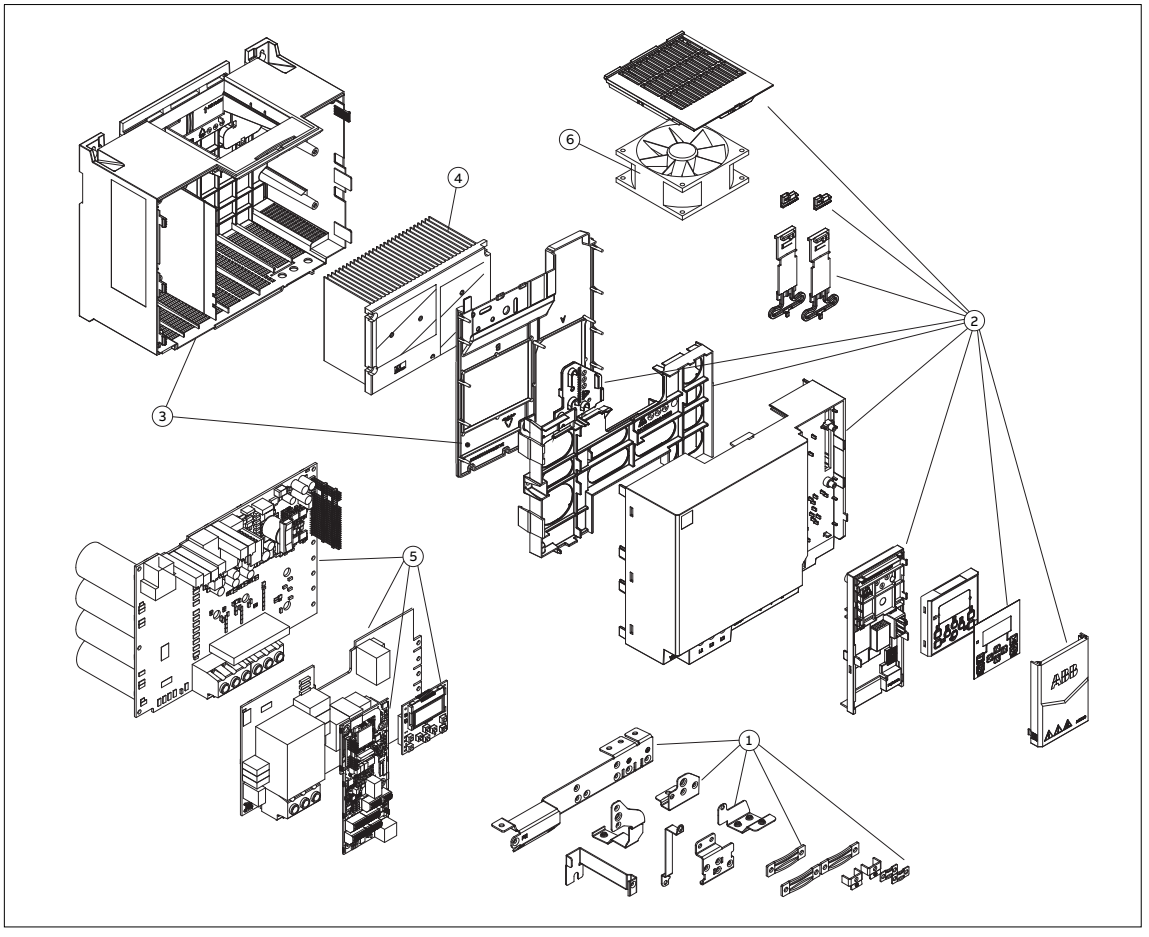

Part No.	Name	Qty	Materials	Weight / g
1	Sheet metal parts	14	Zn-coated Fe	273
2	Housing / cover parts	12	Plastic: ABS PC TPE PET	575
3	Reinforced plastic parts	2	Plastic: PC+10% GF	641
4	Heat sink and other aluminum parts	1	Aluminum: AW 6060: Al Mg Si	1134
5	Printed circuit board	4	Various materials, electronic components	1921
6	Axial fan	1	Various materials, plastic parts: PBT, aluminum alloy	250
			Total weight	**4794 g**

Materials of frame R4 (400 V)

The main components are shown in the figure below.

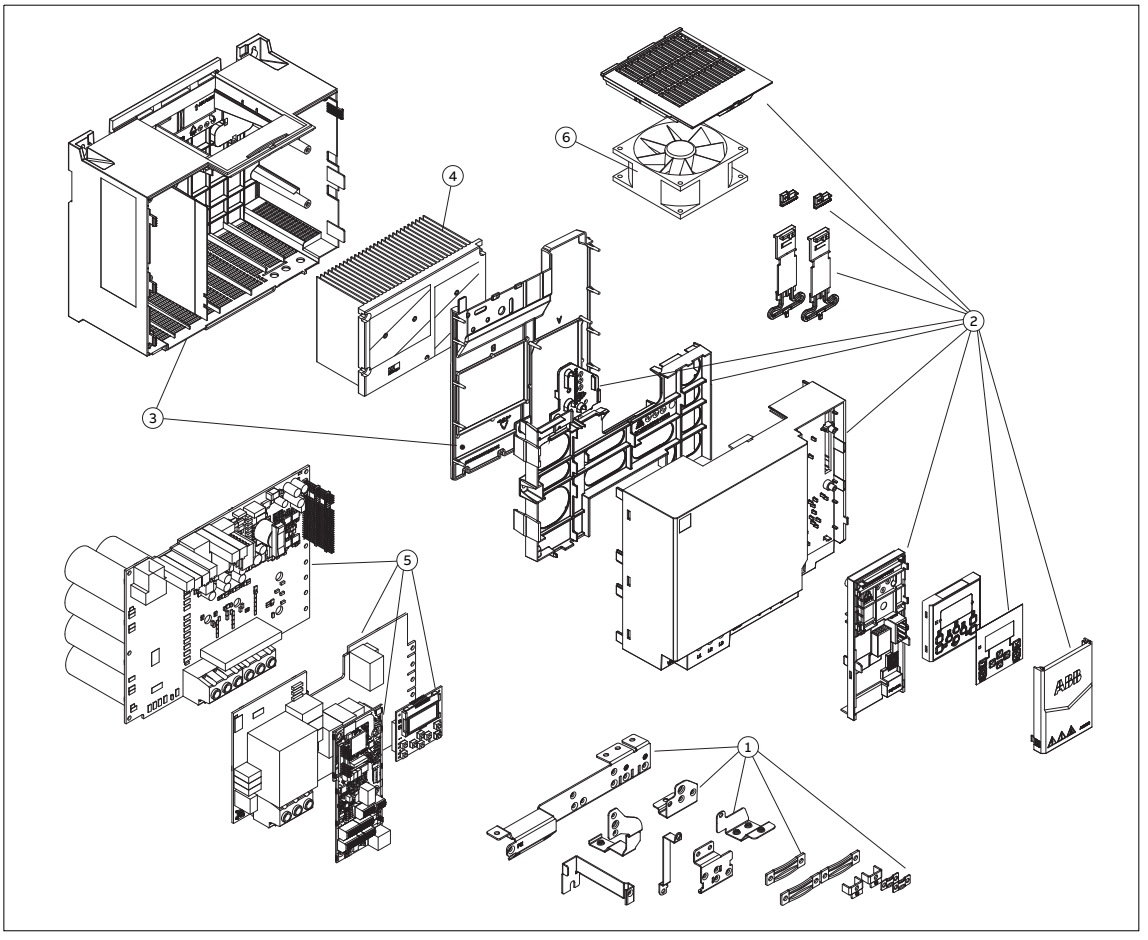

Part No.	Name	Qty	Materials	Weight / g
1	Sheet metal parts	14	Zn-coated Fe	273
2	Housing / cover parts	12	Plastic: ABS PC TPE PET	575
3	Reinforced plastic parts	2	Plastic: PC+10% GF	641
4	Heat sink and other aluminum parts	1	Aluminum: AW 6060: Al Mg Si	1134
5	Printed circuit board	4	Various materials, electronic components	2381
6	Axial fan	1	Various materials, plastic parts: PBT, aluminum alloy	250
			Total weight	**5254 g**

Package

The product package is made of corrugated cardboard.

You can recycle all materials used in the package.

To avoid pollution caused by unnecessary transportation, the factory does not take back used packages. The local ABB companies can give instructions on the recycling.

ABB recommends package recycling as it preserves raw materials and reduces waste being landfilled.

Product manuals and sales brochures

Printed product manuals are made of recyclable paper. Product manuals are available on the Internet.

3

Manufacturing and use

Manufacturing

ABB Drives has a company-wide integrated quality, environmental and occupational health & safety management system. The system is certified in accordance with requirements of international standards ISO 9001 and ISO 14001.

Use

The use of a drive has several positive environmental impacts, such as:

- Substantial energy savings and reduced operating costs can be reached using a drive. Rather than have an electric motor running continuously at full speed, an electric drive allows the user to slow down or speed up the motor.
- Process control is optimized. An electric drive enables a process to achieve the right speed and torque while maintaining its accuracy.
- Need for maintenance is reduced. Being able to vary the speed and torque of an electric motor means there is less wear and tear on the motor and the driven machine.

For more information on ABB Policy on Health, Safety, Environment, Security and Sustainability, see new.abb.com/sustainability/abb-policy-on-health-safety-environment-security-and-sustainability.

For more information on ABB group sustainability objectives, see new.abb.com/sustainability/creating-value/objectives.

4

Product disposal

Contents of this chapter

This chapter contains product disposal instructions.

Disposal

The main parts of the drive can be recycled to preserve natural resources and energy. Product parts and materials should be dismantled and separated.

Generally all metals, such as steel, aluminum, copper and its alloys, and precious metals can be recycled as material. Plastics, rubber, cardboard and other packaging material can be used in energy recovery.

Printed circuit boards and DC capacitors need selective treatment according to IEC 62635 guidelines.

To aid recycling, most plastic parts are marked with an appropriate identification code. In addition, components containing substances of very high concern (SVHCs) are listed in European Chemicals Agency's SCIP database. SCIP is the database for information on Substances of Concern In articles as such or in complex objects (Products) established under the Waste Framework Directive (2008/98/EC). For further information, contact your local ABB distributor or consult European Chemicals Agency's SCIP database to find out which SVHCs are used in the drive, and to find out where those components are located.

Contact your local ABB distributor for further information on environmental aspects. End of life treatment must follow international and national regulations.

For more information on ABB end of life services, see new.abb.com/service/end-of-lifeservices.

Dismantling

You can dismantle the drive manually or in a shredding machine.

Manual dismantling

Sort the parts of the product according to their material contents as follows:

- ferrous metals (plates, screws)
- aluminum (heatsink)
- plastics
- printed circuit boards
- electrolytic capacitors
- other.

You can recycle metal parts (iron and aluminum) and most of the other materials according to local regulations.

For information on harmful materials, see subsection ABB list of prohibited and restricted substances.

Mechanical shredding

In this method, a whole product is mechanically shredded into small pieces and materials are sorted using dedicated sorting processes.

Remove the harmful material before shredding the drive in the shredding machine. See subsection ABB list of prohibited and restricted substances.

ABB list of prohibited and restricted substances

For the ABB list of prohibited and restricted substances, refer to new.abb.com/sustainability/environment.

The purpose of this list is to comply with legislation to avoid chemical substances that may cause environmental or health hazards.

The list gives prohibited substances that must not be used within ABB and restricted substances the use of which should be limited within ABB.

Definitions and regulations of hazardous materials differ from country to country and are likely to change when knowledge of materials increases. The materials used in the product are materials typically used in electrical and electronic equipment.

Recycling information in accordance with the WEEE

WEEE stands for EU Directive on waste electrical and electronic equipment. The WEEE mark shows that at the end of life the product should enter the recycling system. The product should be disposed of separately at an appropriate collection point and not be put in the normal waste stream.

The figure below shows the WEEE mark. The black bar indicates that the equipment has been manufactured after the WEEE Directive came into force in 2005.

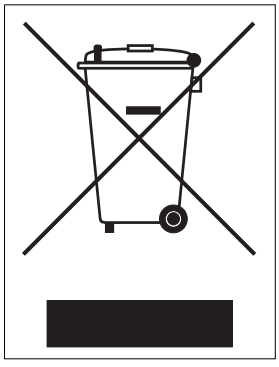

The WEEE mark is added to the type designation label of the drive since 2017.

The figure below shows an example.

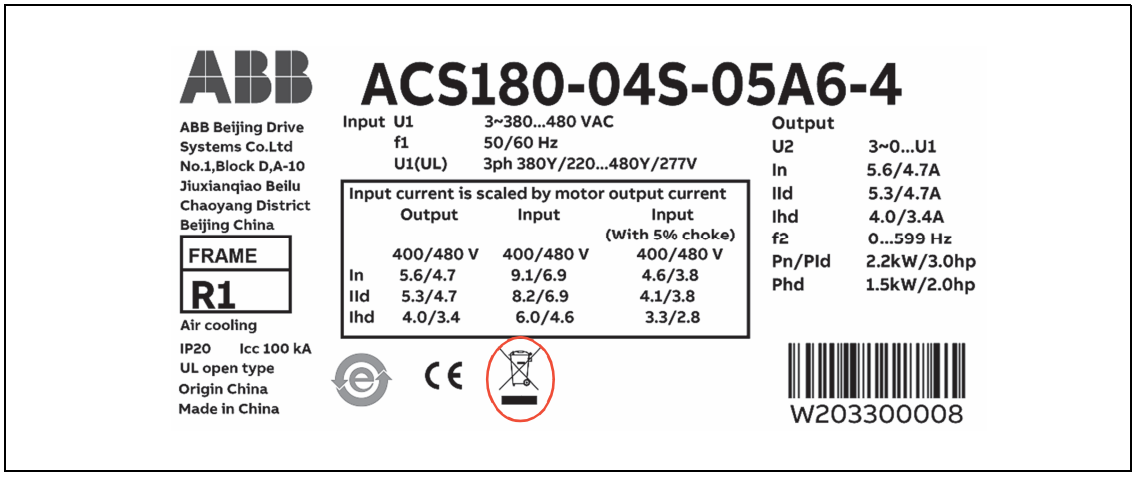

This manual contains information for treatment facilities in accordance with the EU Directive on waste electrical and electronic equipment (WEEE).

The WEEE Directive is implemented through national regulations and therefore requirements vary in each EU member state.

Drives are always parts of other machines or equipment and they are covered by the WEEE Directive when the end product is covered. Inclusion or exclusion depends on the application of the drive.

The WEEE Directive does not apply to drives which are used in large-scale fixed installations, large-scale stationary industrial tools, means of transport for persons and goods, or non-road mobile machinery made available exclusively for professional use.

ABB recommends to contact local environmental authorities for up-to-date information about national recycling requirements.

Recycling example

This example complies with typical national regulations valid at the time of publishing this manual.

Materials	Recycling method
Steel	Recycled as material
Aluminum	Recycled as material
Plastics	Energy recovery (incineration)
Printed circuit boards	Recycled as WEEE
Electrolytic capacitors	Recycled as WEEE
Cables	Recycled as material
Ceramics	Landfilled
Other materials	Energy recovery (incineration)

EU Directives and regulations

1. Directive 2011/65/EU of the European Parliament and of the Council of 8 June 2011 on the restriction of the use of certain hazardous substances in electrical and electronic equipment (RoHS II).
2. Regulation No 1907/2006/EC of the European Parliament and of the Council of 18 December 2006 concerning the Registration, Evaluation, Authorization and Restriction of Chemicals (REACH):
   - Annex XIV: List of substances subject to authorization
   - Annex XVII: Restrictions on use of substances in articles
   - SVHC: Candidate list of substances of very high concern for authorization.
3. Directive 2012/19/EU of the European Parliament and of the Council of 4 July 2012 on waste electrical and electronic equipment (WEEE).

Further information

Product and service inquiries

Address any inquiries about the product to your local ABB representative, quoting the type designation and serial number of the unit in question. A listing of ABB sales, support and service contacts can be found by navigating to abb.com/searchchannels.

Product training

For information on ABB product training, navigate to new.abb.com/service/training.

Providing feedback on ABB Drives manuals

Your comments on our manuals are welcome. Navigate to new.abb.com/drives/manuals-feedback-form.

Document library on the Internet

You can find manuals and other product documents in PDF format on the Internet at abb.com/drives/documents.

ABB environment policy

You can find ABB's environmental policy on the Internet at new.abb.com/sustainability/environment-policy.

ABB group sustainability objectives

For information on ABB group sustainability objectives, navigate to new.abb.com/sustainability/creating-value/objectives.

ABB list of prohibited and restricted substances

You can find the ABB list of prohibited and restricted substances at new.abb.com/sustainability/environment.

abb.com/drives

3AXD50000613342C

© Copyright 2023 ABB. All rights reserved.
Specifications subject to change without notice.

3AXD50000613342 Rev C (EN) 2023-05-31