ABB GENERAL PURPOSE DRIVES

ACS560 standard control program

Quick installation and start-up guide

English . . . . . 3 EN

हिंदी . . . . . 171 HI

3AXD50000042620 Rev J MUL

EFFECTIVE: 2022-08-16

EN - Quick installation and start-up guide

This guide instructs how to install and start-up the ACS560 drive of all frame sizes (R0...R8). For complete information, see the drive *ACS560 standard control program firmware manual* (3AXD50000044997[English]) and *ACS560 drives (0.75 to 160 kW, 1.0 to 215 hp) hardware manual* (3AXD50000044998[English]).

General considerations

Obey the safety instructions

WARNING! Obey these instructions. If you ignore them, injury or death, or damage to the equipment can occur.

- If you are not a qualified electrician, do not do electrical installation work.
- Do not work on the drive, motor cable or motor when main power is applied. If the drive is already connected to the input power, wait for 5 minutes after disconnecting the input power.
- Do not work on the control cables when power is applied to the drive or to the external control circuits.
- Use the lifting eyes of the drive when you lift the drive. Do not tilt the drive. The drive is heavy and its center of gravity is high. An overturning drive can cause physical injury.
- Make sure that debris from borings and grindings does not enter the drive when installing.
- Make sure that the floor below the drive and the wall where the drive is installed are non-flammable.

Reform the capacitors

Reform the capacitors if the drive is stored for a year or more.

The manufacturing date is on the type designation label which is attached to the drive. The serial number format MYYWWRXXXX represents the month, year and the week.

YY: 13, 14, 15, … for 2013, 2014, 2015, …

WW: 01, 02, 03, … for week 1, week 2, week 3, …

For information on reforming the capacitors, see *Converter module capacitor reforming instructions* (3BFE64059629 [English]).

Select the power cables

Size the power cables according to local regulations to carry the nominal current given on the type designation label of your drive. See Ratings (page 127).

Ensure the cooling

The maximum ambient temperature without derating is:

- 50 °C (+122 °F) for R0...R2 frames
- 40 °C (+104 °F) for R3...R8 frames

No condensation or frost is allowed. For more information on the ambient temperature, see the hardware manual.

Protect the drive and input power cable

If you use gG fuses, make sure that the operating time of the fuse is below 0.5 seconds. Follow the local regulations.

Install the drive

You can install the drive

- to a DIN installation rail with integrated lock. This method applies to frames R0...R2 only.

  or

- with screws to a suitable surface (wall or assembly plate). This method applies to all frames R0...R8.

Required tools for installing the drive

- A drill and suitable drill bits.
- Screwdriver (Flat head, Phillips head, and Torx)
- wrench with suitable bits and sizes (appropriate for the installation hardware used). See the required screw sizes in below installation instructions
- A tape measure and spirit level.
- Personal protective equipment.

Installing a drive to DIN installation rail (frames R0...R2 only)

1. On the top center of the drive move the locking part to the left.
2. Push and hold the locking button down.

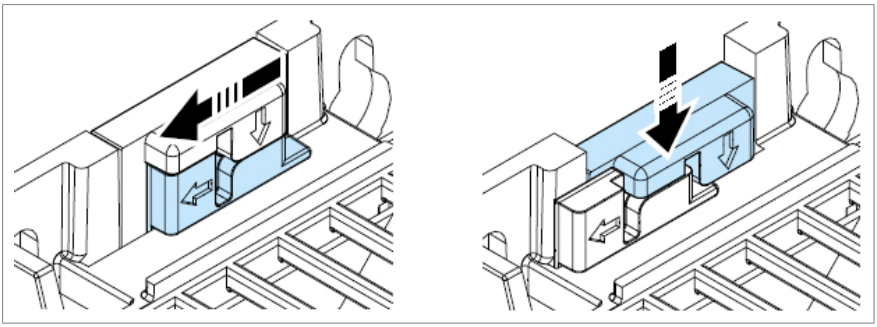

3. Put the top tabs on the drive onto the top edge of the DIN rail.
4. Put the drive against the bottom edge of the DIN installation rail.
5. Release the locking button.
6. Move the locking part to the right.
7. Make sure the drive is installed correctly.

Removing drive from the DIN installation rail (frames R0...R2 only)

To remove the drive, open the locking part using a flat-head screwdriver.

Installing a drive with screws (frames R0...R8)

All drives of frames R0...R8 can be installed on a wall with screws. See the required screw sizes in below mounting dimensions table. See also Dimensions, weights and free space requirements (page 132)

WARNING!
The drive module (frames R6...R8) is heavy (45 to 70 kg). Consider the following:

- Use a suitable lifting device.
- Do not lift the module manually.
- Make sure that the wall and the fixing devices can carry the weight. See data in the table below.

EN

1. Mark the mounting hole locations using the mounting template included in the package.

Mounting template	Mounting dimensions									
	Frames	**R0**	**R1**	**R2**	**R3**	**R4**	**R5**	**R6**	**R7**	**R8**
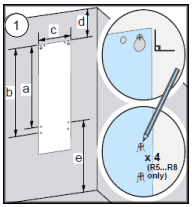	**Screws (mm)**	M5			M6		M8			
	a	191			473	619	581	531	583	658
	b	-					612	571	623	701
		50	75	148	160			213	245	263
	d	75			-					
	e	75			200					
	Weight (kg)	4.47	4.57	7.54	14.86	23.0	28.0	45.0	55.0	70.0

2. Drill the mounting holes.
3. Tighten the screws into the mounting holes.
4. Position the drive onto the screws on the wall.
5. Tighten the mounting screws.

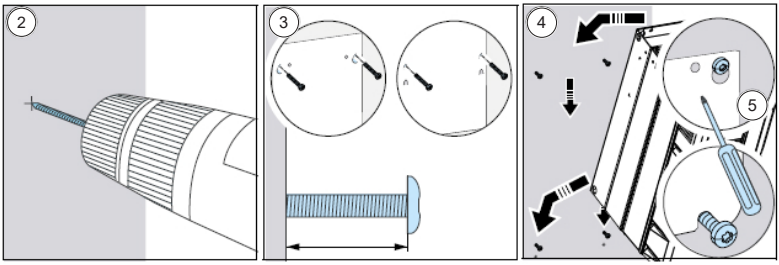

See the example of mounting screws in frame R0

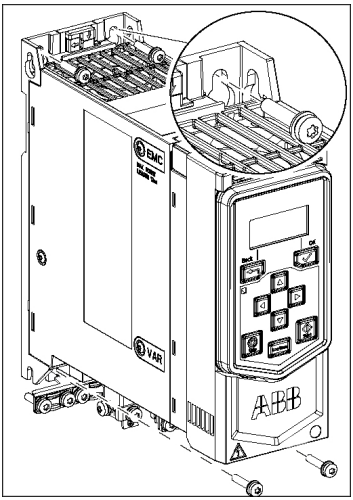

6. Frames R5...R8 only: Remove the front cover with fastening screws (6a), move the cover to the top side (6b) and then up (6c).
7. Frames R5...R8 only: Attach the cable conduit box to the drive frame.

   Note: Cable conduit box is optional and is not part of standard delivery.
8. Frames R5...R8 only: Tighten the box screws: two at the top and four at the bottom.

EN

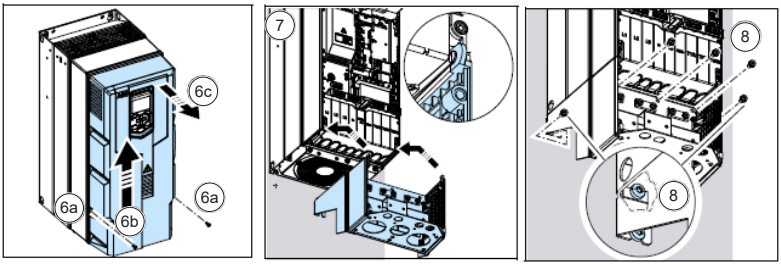

EN

Measuring the insulation resistance of the motor and motor cable

Obey the safety instructions of the drive. If you ignore them, injury or death, or damage to the equipment can occur. If you are not a qualified electrical professional, do not do installation, commissioning or maintenance work.

1. Follow the electrical safety precautions. See Electrical safety instructions in the hardware manual.
2. Make sure that the motor cable is disconnected from the drive output terminals.
3. Measure the insulation resistance between each phase conductor and the protective earth conductor. Use a measuring voltage of 1000 V DC. The insulation resistance of an ABB motor must be more than 100 Mohm (reference value at 25 °C [77 °F]). For the insulation resistance of other motors, refer to the manufacturer's instructions.

   Note: Moisture inside the motor reduces the insulation resistance. If you think that there is moisture in the motor, dry the motor and do the measurement again.

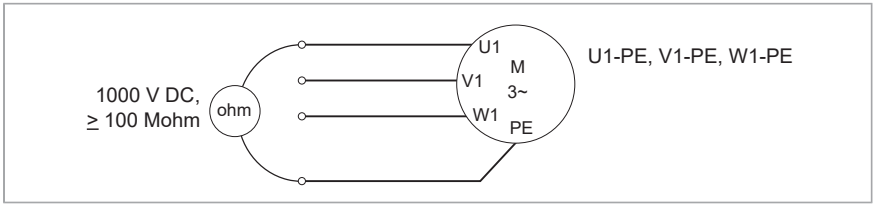

EN

Connecting the power cables

Connection diagram

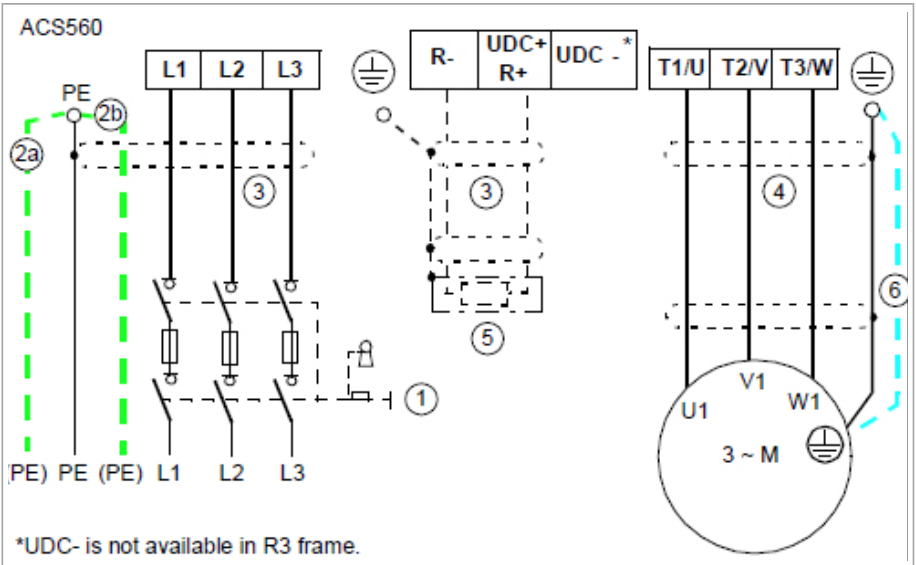

1	For alternatives, see hardware manual.
2	Use a separate grounding PE cable (2a) or a cable with a separate PE conductor (2b) if the conductivity of the shield does not meet the requirements for the PE conductor (see hardware manual).
3	360° grounding is recommended if shielded cable is used. Ground the other end of the input cable shield or PE conductor at the distribution board.
4	360° grounding is required.
5	External brake resistor (for frames R4...R8 only).
6	Use a separate grounding cable if the shield does not meet the requirements of IEC 61439-1 and there is no symmetrically constructed grounding conductor in the cable. For more information, see hardware manual.

Note: If there is a symmetrically constructed grounding conductor on the motor cable in addition to the conductive shield, connect the grounding conductor to the grounding terminal at the drive and motor ends.

Do not use an asymmetrically constructed motor cable for motors above 30 kW. Earthing at the motor increases bearing current and power consumption, damages the motor bearing and even the motor.

EN

Connection procedure: frames R0...R2

If the drive is connected on an IT (ungrounded) system, make sure that the EMC filter and Varistor (VAR) is disconnected. For more information, see hardware manual.

1. Remove the front cover as follows:

- Loosen the retaining screw with a screwdriver (1a).
- Lift the cover from the bottom outwards (1b).

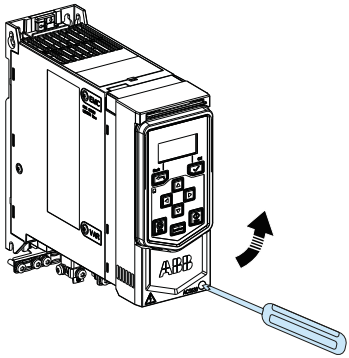

EN

Motor cable

2. Prepare the ends of the cable as illustrated in the figure. Two different motor cable types are shown in the figures (2a.and 2b).

Note: The bare shield will be grounded 360°.

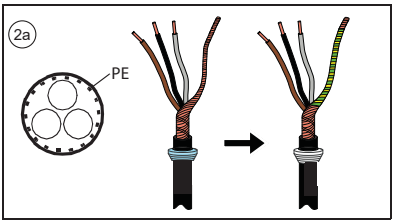

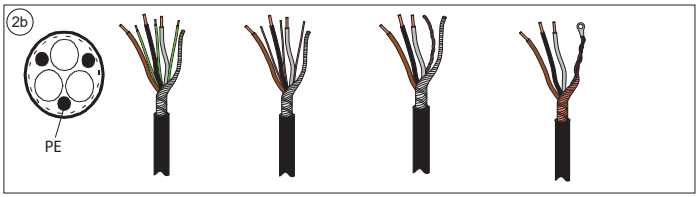

3. Connect the motor cable as follows:

- Ground the shield 360° by tightening the clamp of the power cable grounding shelf onto the stripped part of the cable (3a).
- Connect the twisted shield of the cable to the grounding terminal (3b).
- Connect the phase conductors of the cable to the terminals of T1/U, T2/V and T3/W.

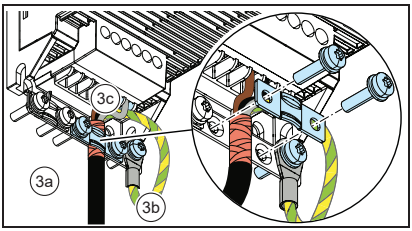

- Tighten the screws to the torque given below.

Frame size	R0…R1		R2	
	N·m	lbf·ft	N·m	lbf·ft
T1/U. T2/V. T3/W	0.5…0.6	0.4	1.2…1.5	0.9…1.1

EN

Input power cable

4. Prepare the ends of the cable as illustrated in the figure.

Note: The bare shield will be grounded 360°. Mark the pigtail made from the shield as a PE conductor with yellow-and-green color

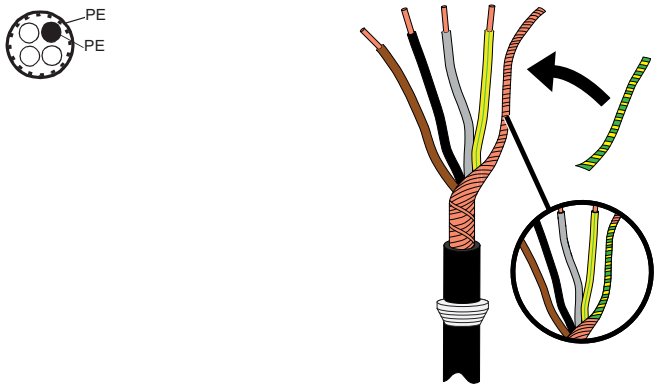

EN

5. Connect the input power cable as follows:

- Connect the twisted shield of the cable to the grounding terminal (5a).
- Connect the phase conductors of the cable to the L1, L2 and L3 terminals.

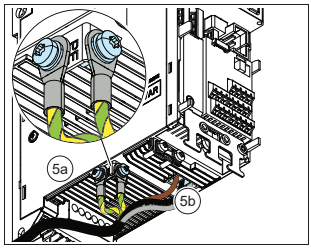

- Tighten the screws to the torque given below:

Frame size	R0…R1		R2	
	N·m	lbf·ft	N·m	lbf·ft
L1, L2, L3	0.5…0.6	0.4	1.2…1.5	0.9…1.1

6. Connect the braking resistor cable as the motor cable. See step 3.

7. Ground the shield 360° (6a).

8. Connect the twisted shield to the grounding terminal (6b) and the conductors to the UDC+/R+ and R- terminals (6c).

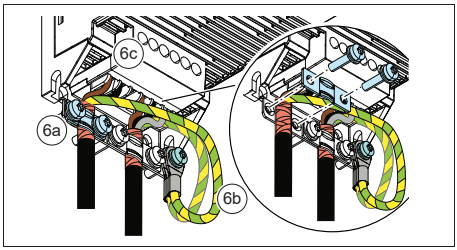

9. Tighten the screws to the torque given below.

EN

Frame size	R0…R1		R2	
	N·m	lbf·ft	N·m	lbf·ft
UDC+/R+, R-	0.5…0.6	0.4	1.2…1.5	0.9…1.1

Finalization

10. Ground the motor cable shield at the motor end. For minimum radio frequency interference, ground the motor cable shield 360° at the lead-through of the motor terminal box.

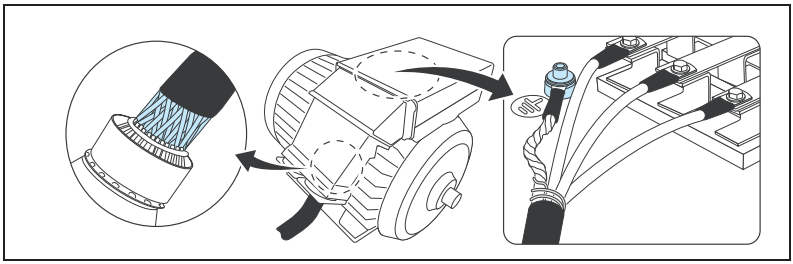

Connection procedure, frames R3...R4

If the drive is connected on an IT (ungrounded) system, make sure you have disconnected the EMC filter and Varistor (VAR). See EMC filter (page 30).

1. Remove the front cover as follows:

- Loosen the retaining screw with a screwdriver (1a).
- Push the front cover upward to uncouple top buckle (1b), and lift the cover from the bottom outwards (1c).

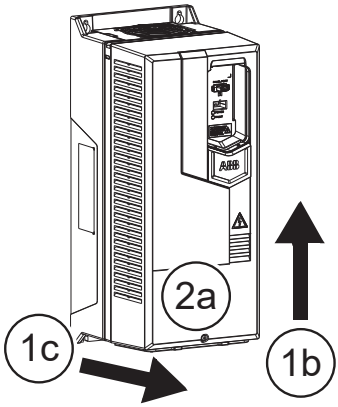

Motor cable

2. Prepare the ends of the cable as illustrated in the figure. Two different motor cable types are shown in the figures 2a and 2b.

Note: The bare shield will be grounded 360°.

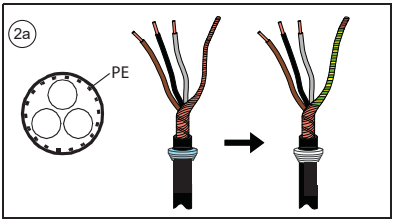

EN

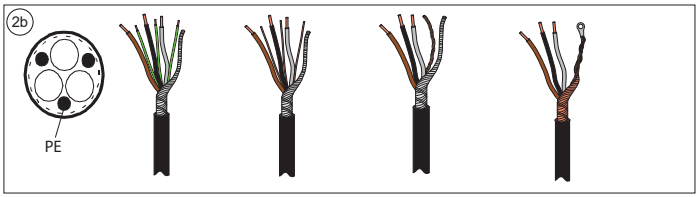

3. Connect the motor cable as follows:

If the power cable is temporarily removed from the grounding shelf, connect the motor and input power cables except the 360° grounding, and then reinstall the grounding shelf.

EN

- Ground the shield 360° by tightening the clamp of the power cable grounding shelf onto the stripped part of the cable (4a).
- Connect the twisted shield of the cable to the grounding terminal (4b).
- Connect the phase conductors of the cable to the T1/U, T2/V and T3/W terminals.
- Tighten the screws to the torque given below:

Frame size	R3		R4	
	N·m	lbf·ft	N·m	lbf·ft
T1/U. T2/V. T3/W.	2.5…4.5	1.8…3.3	4.0	3.0

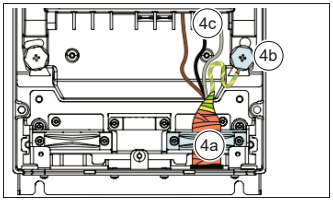

Notes:

- The screws are of different length. Install them at correct locations.
- After reinstalling the grounding shelf, you can make the 360° grounding for the cables.

Input power cable

4. Prepare the ends of the cable as illustrated in the figure.

Note: The bare shield is grounded 360°. Mark the pigtail made from the shield as a PE conductor with yellow-and-green color.

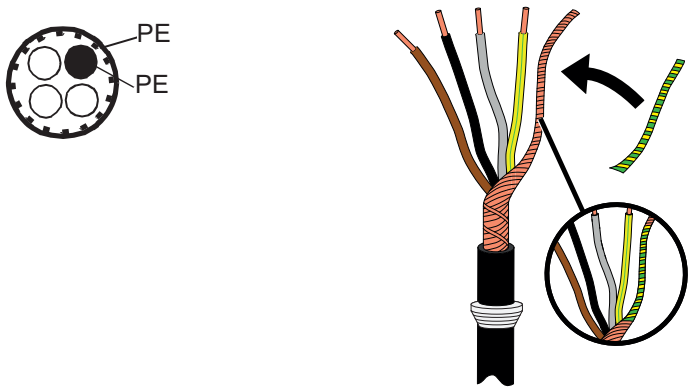

5. Connect the input power cable as follows:

- Ground the shield 360° by tightening the clamp of the power cable grounding shelf onto the stripped part of the cable (6a).
- Connect the twisted shield of the cable to the grounding terminal (6b).
- Connect the phase conductors of the cable to the terminals of L1, L2 and L3.
- Tighten the screws to the torque given below.

Frame size	**R3**		**R4**	
	N·m	**lbf·ft**	**N·m**	**lbf·ft**
L1, L2, L3	2.5…4.5	1.8…3.3	4.0	3.0

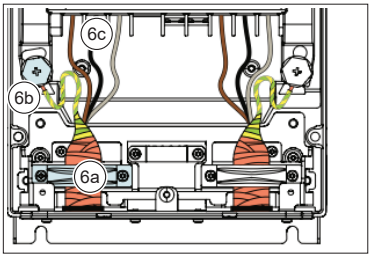

6. Connect cable by the motor cable method mentioned in step 3.

7. Ground the shield 360° (7a).

8. Connect the twisted shield to the grounding terminal (7b).

9. For R3, connect the conductors to the R+ and R- terminals (7c).

10. Tighten to the torque given below.

Frame size	R3	
	N.m	lbf.ft
R+, R-	2.5...4.5	1.8...3.3

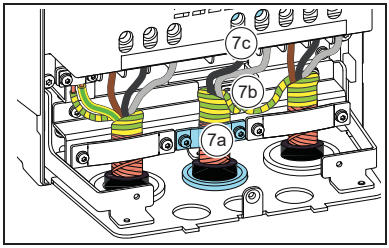

EN

Finalization

11. Install the grounding shelf for the control cables (included with the mounting screws in a plastic bag in the delivery) onto the grounding shelf for the power cables.

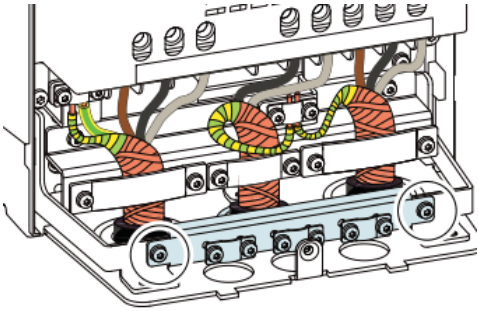

12. Ground the motor cable shield at the motor end. For minimum radio frequency interference, ground the motor cable shield 360° at the lead-through of the motor terminal box.

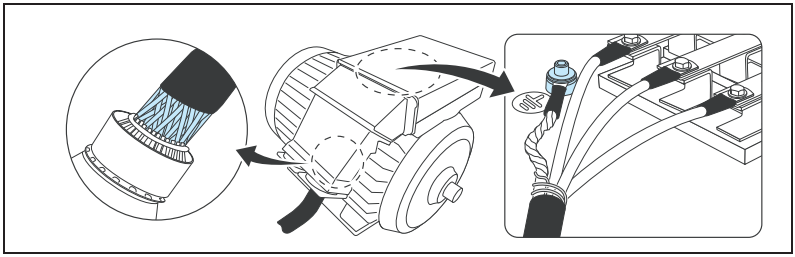

EN

Connection procedure, frames R5...R8

If the drive will be connected on an IT (ungrounded) system, make sure you have disconnected the EMC filter and Varistor (VAR). See EMC filter (page 30).

1. Attach the residual voltage warning sticker next to the control board.
2. Remove the side plates of the cable box as follows:
   - Remove the retaining screws.
   - Slide the walls out.

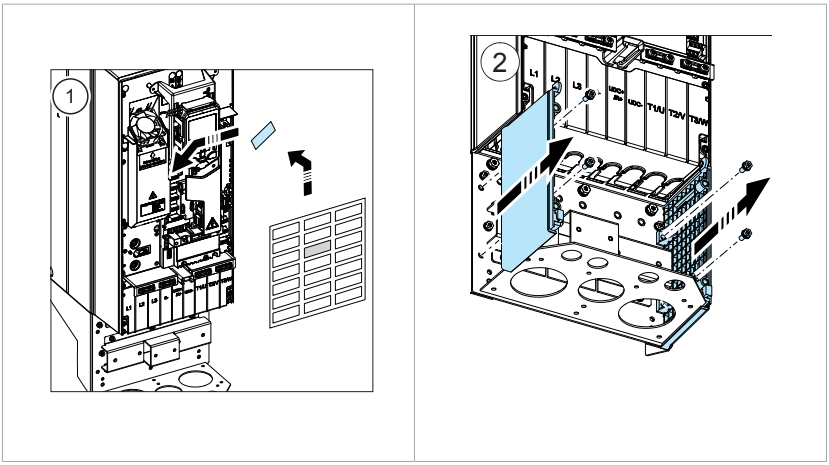

3. Remove the shroud on the power cable terminals by releasing the clips with a screwdriver and pulling the shroud out.
4. Knock out holes in the shroud for the cables to be installed.
5. Frame R8 only: If you install parallel cables, also knock out holes in the lower shroud for the cables to be installed.

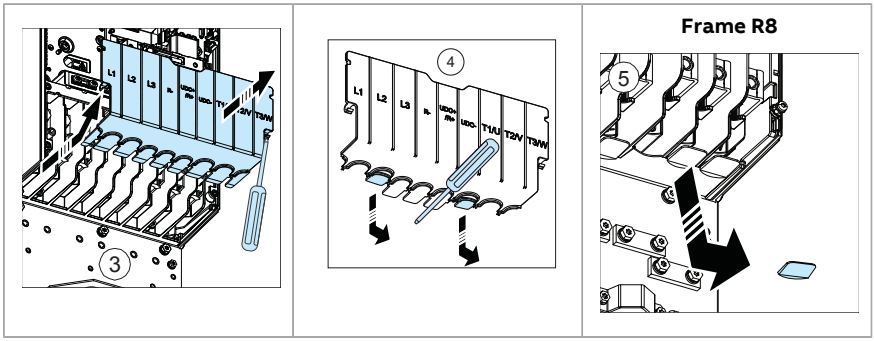

Motor cable

6. Cut an adequate hole into the rubber grommet. Slide the grommet onto the cable.

7. Prepare the ends of the input power cable and motor cable as illustrated in the figure. If you use aluminum cables, put grease on the peeled aluminum cable before connecting it to the drive. Two different motor cable types are shown in the figures (7a, 7b).

Note: The bare shield is grounded 360°. Mark the pigtail made from the shield as a PE conductor with yellow-and-green color.

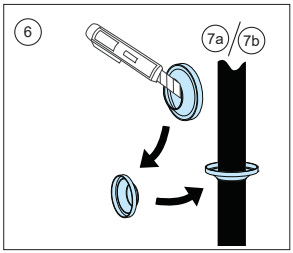

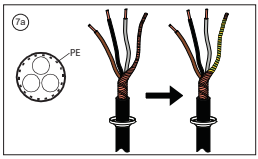

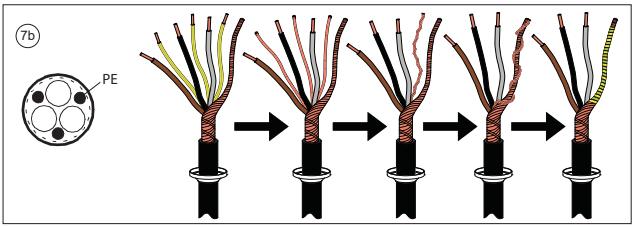

8. Slide the cables through the holes of the lead-through plate and attach the grommets to the holes (the motor cable to the right and the input power cable to the left).

9. Connect the motor cable as follows:

- Ground the shield 360° under the grounding clamps.
- Connect the twisted shield of the cable to the grounding terminal (9a).
- Connect the phase conductors of the cable to terminals T1/U, T2/V and T3/W. Tighten the screws to the torque given in the figure (9b).

EN

Note: Frame R8 only:

- If you connected the connector to only one conductor, ABB recommends to put the conductor under the upper pressure plate.
- The connectors are detachable, but ABB recommends not to detach them. If you do, detach and reinstall the connectors as follows.

Input power cable

10. Connect the input power cable as in step 9.

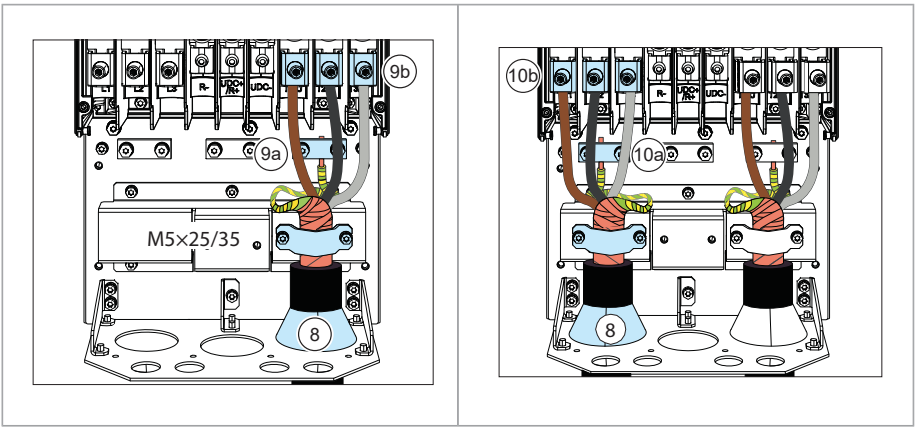

Frame size	L1, L2, L3, T1/U, T2/V, T3/W		PE			
	N·m	lbf·ft	N·m	lbf·ft	N·m	lbf·ft
R5	5.6	4.1	2.2	1.6	1.2	0.9
R6	30	22.1	9.8	7.2	1.2	0.9
R7	40	29.5	9.8	7.2	1.2	0.9
R8	40	29.5	9.8	7.2	1.2	0.9

Terminals T1/U, T2/V and T3/W

- Remove the nut attached to the connector and its busbar.
- Put the conductor under the connector pressure plate and pre-tighten the conductor.
- Put the connector back to its busbar. Start the nut, and turn it by hand to at least two rotations.

Before using tools, make sure that the nut/screw is not cross-threaded. Cross-threading damages the drive and causes danger.

- Tighten the nut to a torque of 30 N·m (22 lbf·ft).
- Tighten the conductor(s) to 40 N·m (30 lbf·ft) for frame R8 or to 70 N·m (52 lbf·ft) for frame R8.

Terminals L1, L2 and L3

- Remove the combi screw attached to the connector and to its terminal post, and pull the connector off.
- Put the conductor under the connector pressure plate and pre-tighten the conductor.
- Put the connector back onto the terminal post. Start the combi screw, and turn it by hand to at least two rotations.

Before using tools, make sure that the nut/screw is not cross-threaded. Cross-threading can damage the drive and cause danger.

EN

- Tighten the combi screw to a torque of 30 N·m (22 lbf·ft).
- Tighten the conductor(s) to 40 N·m (30 lbf·ft) for frame R8 or to 70 N·m (52 lbf·ft) for frame R8.

11. Frames R8 only: If you install parallel cables, install the second grounding shelf for the parallel power cables (11a). Repeat steps 6...11 (11b).

Frame R8:

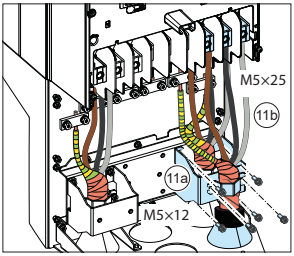

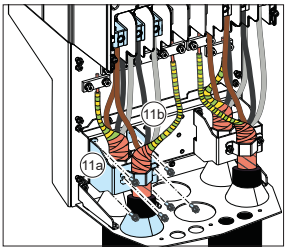

12. Install the grounding shelf of the control cables.

13. Reinstall the shroud on the power terminals.

14. Secure the cables outside the unit mechanically.

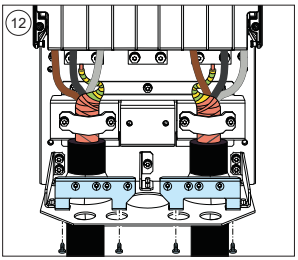

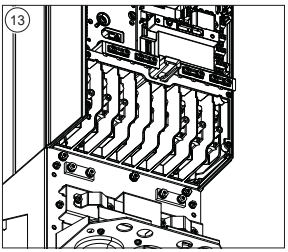

15. Ground the motor cable shield at the motor end. For minimum radio frequency interference, ground the motor cable shield 360° at the lead-through of the motor terminal box.

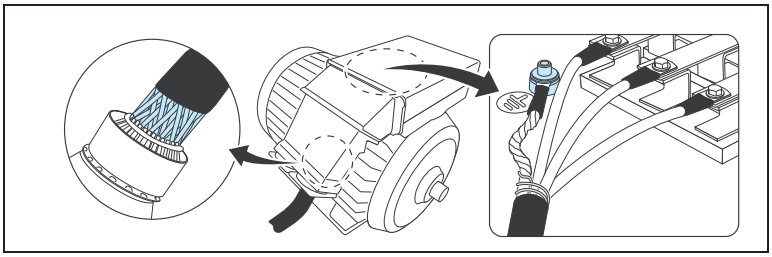

DC connection

The UDC+ and UDC- terminals (as standard in frames R4…R8) are for using external brake chopper units.

Connecting the control cables

Connect the cables as described in firmware manual. See the below default I/O connections of ABB standard macro. See other macro connections in the firmware manual.

Default control connections of ABB standard macro

Connection diagram

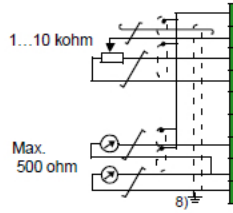

X1	Reference voltage and analog inputs and outputs	
1	SCR	Signal cable shield (screen)
2	AI1	External frequency reference: 0…10 V[1) 4)] *22.11*
3	AGND	Analog input circuit, common
4	+10V	10 V DC reference voltage
5	AI2	Not configured [2)]
6	AGND	Analog input circuit, common
7	AO1	Output frequency: 0/4…20 mA or 0...10V *13.12*
8	AO2	Output current: 0/4…20 mA *13.22*
9	AGND	Analog output circuit common

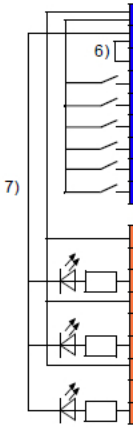

X2, X3	Aux. voltage output and programmable digital inputs	
10	+24V	Aux. voltage output +24 VDC, max. 250 mA[3)]
11	DGND	Aux. voltage output common
12	DCOM	Digital input common for all
13	DI1	Stop (0) / Start (1) *20.03*
14	DI2	Forward (0) / reverse (1) *20.03*
15	DI3	Constant frequency selection[4)] *28.22*
16	DI4	Constant frequency selection[4)] *28.23*
17	DI5	Ramp selection: Ramp 1 (0) / Ramp 2 (1)[5)] *28.71*
18	DI6	Not configured

X6,X7, X8	Relay outputs	
19	RO1C	**Ready run** *10.24* 250 V AC / 30 V DC 2 A
20	RO1A	
21	RO1B	
22	RO2C	**Running** *10.27* 250 V AC / 30 V DC 2 A
23	RO2A	
24	RO2B	
25	RO3C	**Fault (-1)** *10.30* 250 V AC / 30 V DC 2 A
26	RO3A	
27	RO3B	

X5	Built-in Modbus	
29	B+	Internal Modbus RTU (EIA-485).
30	A-	
31	DGND	

(Frame R0~R2)		
S100	TERM&BIAS	Termination resistor and bias resistor switch

(Frame R3~R8)		
S100	TERM	Termination resistor switch
S200	BIAS	Bias resistor switch

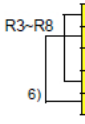

X4	Safety torque off		
	R0~R2	R3~R8	
33	-	OUT1	Safety torque off function. Factory connection. Both circuits must be closed for the drive to start. See *Safe torque off function* in the drive *hardware* manual.
34	SGND	OUT2	
35	OUT1	SGND	
36	[9)] IN1	IN1	
37	[6)] IN2	IN2	

X10	24 V AC/DC (frames R6~R8 only)	
40	24 V AC/DC- in	24V AC/DC input, for control unit power supply when external main power is disconnected.
41	24 V AC/DC+ in	
	Redundant auxiliary voltage output (frames R0~R2)	
42	+24 V	Aux. voltage output +24 V DC, max. 250 mA[3)]
43	DGND	Aux. voltage output common
44	DCOM	Digital input common for all

EN

Note: For information of parameters listed in the diagram, see Parameter listing (page 53).

Terminal sizes

- (frames R0…R8): 0.14…1.5 mm^2 (all terminals)
- tightening torques: 0.5…0.6 N·m (0.4 lbf·ft)

Notes:

1) Current [0(4)…20 mA, R_{in} < 500 ohm] or voltage [0(2)…10 V, R_{in} > 200 kohm] input as selected with parameter *12.15 AI1 unit selection*.

2) Current [0(4)…20 mA, R_{in} = 100 ohm] or voltage[0(2)…10 V, R_{in} > 200 kohm] input as selected with parameter *12.25AI2 unit selection*.

EN

3) Total load capacity of the auxiliary voltage output+24V (X2:10) = 6.0 W (250 mA / 24 V) - User can use this source for either of theI/O connections (DI1... DI2- RO1 or DI3...DI6 - RO2~RO3).

4) The constant speed are set based on the combination of sources as follows:

Source defined by parameter 28.22	Source defined by parameter 28.23	Constant speed active
0	0	Set speed through AI1
1	0	Constant frequency 1
0	1	Constant frequency 2

5) The speed reference ramp is set based on the combination of sources as follows:

DI5 parameter 28.71	Ramp set	Parameters
		Scalar control (default)
0	Acc/Dec time 1	28.72 time 1
		28.73 Freq deceleration time 1
1	Acc/Dec time 2	28.74 time 2
		28.75 time 2

6) Connected with jumpers at the factory.

7) Applicable for R0~R2 frames only.

8) Use shielded twisted-pair cables for digital signals.

9) Ground the outer shield of the cable 360° under the grounding clamp on the grounding shelf for the control cables.

[10] Input signal

[11] Output signal

Install optional modules, if any

The ACS560-01 drive supports the below option modules:

- CMOD-02 power extension module (for R3...R5 frames)
- BAPO-01 power extension module (for R0...R2 frames)
- BIO-01 I/O extension module (for R0...R2 frames)
- Fieldbus module (in frames R0...R2 frames, fieldbus module can be used with BIO-01 also)
  For information on supported fieldbus modules, see ACS560 product catalog.

For more information on optional modules, see hardware manual.

Hardware description

Product overview

The BIO-01 front option module (Option +L515) is an I/O extension module for R0...R2 frames and can also be used with any of the fieldbus optional module. The BIO-01 I/O extension module provides:

- three additional digital inputs (DI3, DI4 and DI5)
- one analog input (AI1), and
- one digital output (DO1).

The digital output (DO1) is referred as DIO1 in the firmware. This works only in output mode. You can also use DI4 and DI5 as frequency inputs and DO1 as a frequency output.

BIO-01 terminal block is removable and uses spring clamps for assembly.

Layout

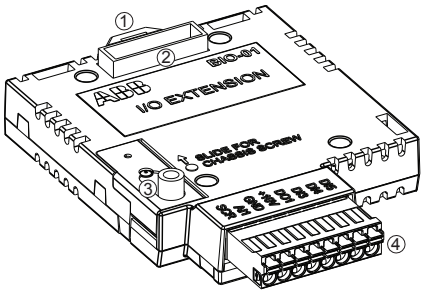

1. Locking tab
2. Fieldbus option module slot
3. Chassis screw
4. I/O connector

EN

BIO-01 Electrical connection

Terminals External sample connection		Description	Base unit	Internal connection
		Aux. voltage output and prog. digital input		
	+24V	Aux. output +24 V DC, max. 200 mA	X	
	DGND	Aux. voltage output common	X	
	DCOM	Digital input common for all	X	
	DI1	Stop (0)/Start (1)	X	
	DI2	Forward (0)/Reverse (1)	X	
		Digital and analog I/O extension BIO-01		
	DI3	Constant frequency/speed selection		
	DI4	Constant frequency/speed selection		
	DI5	Ramp set 1 (0)/Ramp set 2 (1)		
	DO1	Not configured		
	AI1	Output frequency/speed ref: 0...10 V		
	+10V	Ref. voltage +10 V DC (max. 10 mA)		
	GND	Analog circuit common / DO common		
	SCR	Signal cable shield / DO screen		
		Safe torque off (STO)		
	SGND	Safe torque off. Factory connection. Both circuits must be closed for the drive to start.	X	
	IN1		X	
	IN2		X	
	OUT1		X	

Install BIO-01

By default, RIIO-01 module is provided in ACS560 standard R0...R2 drives. You can remove the RIIO-01 module and can install BIO-01 and/or fieldbus adapter module (+Fxxx).

To install BIO-01 or/and fieldbus module, perform the following steps

1. Remove the front cover(s). See chapter *Electrical installation* in the hardware manual.

2. Remove the existing RIIO-01 module. To remove,

   Note: The RIIO-01 module is available by default in standard ACS560-01 R0...R2 drives.

   a. Loosen the locking screw.
   b. Pull the locking tab out and unlock the RIIO-01 module.

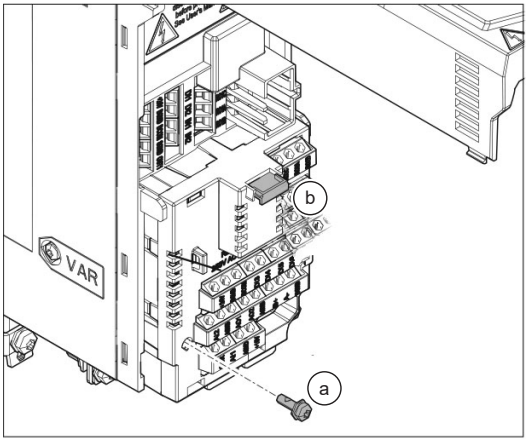

   c. Pull the module and remove it.

      Note: The module can be tightly in position.

3. Align the BIO-01 module with the option module slot in the front of the drive.
4. Push the BIO-01 option module into position.

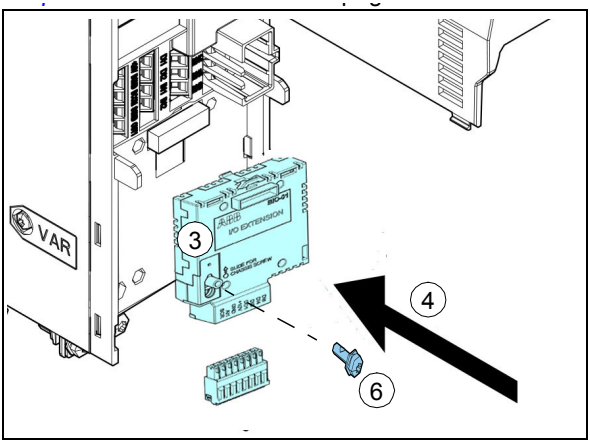

5. Tighten the locking screw.

   Note: If required, you can install fieldbus module on top of the BIO-01 module.

For more information on BIO-01 and other option modules, see chapter *Electrical installation* in the hardware manual.

Checking the compatibility with IT (ungrounded) and corner-grounded TN systems

EMC filter

The internal EMC filter is not suitable for use on an IT (ungrounded) system or on a corner-grounded TN system. Disconnect the EMC filter before connecting the drive to the supply network. Check the table in Ground-to-phase varistor (page 31).

WARNING!
Do not install the drive with the internal EMC filter connected on an IT system (an ungrounded power system or a high-resistance-grounded [over 30 ohms] power system), otherwise the system will be connected to ground potential through the EMC filter capacitors of the drive. This can cause danger, or damage the drive.

Do not install the drive with the internal EMC filter connected on a corner-grounded TN system, otherwise the drive will be damaged.

Note: When the internal EMC filter is disconnected, the drive EMC compatibility is considerably reduced. For more information, see section *Technical data* in the hardware manual.

Ground-to-phase varistor

The ground-to-phase varistor is not suitable for use on an IT (ungrounded) system. Disconnect the ground-to-phase varistor before connecting the drive to the supply network. Check the table below.

WARNING!
Do not install the drive with the ground-to-phase varistor connected on an IT system (an ungrounded power system or a high-resistance-grounded [over 30 ohms] power system), otherwise the varistor circuit can be damaged.

Check from the table below if you have to disconnect the EMC filter (EMC) or ground-to-phase varistor (VAR).

For instructions on how to do this, see hardware manual.

EN

Frame sizes	EMC filter (EMC)	Ground- to-phase varistor (VAR)	Symmetrically grounded TN systems (TN-S systems) [1]	Corner grounded TN systems [2]	IT systems (ungrounded or high-resistance grounded [>30 ohms]) [3]
R0...R3	EMC (1 screw)	-	Do not disconnect	Disconnect	Disconnect
	-	VAR (1 screw)	Do not disconnect	Do not disconnect	Disconnect
R4...R5	EMC (2 screws)	-	Do not disconnect	Frames R4 and R5 cannot be used in corner grounded TN systems.	Disconnect
	-	VAR (1 screw)	Do not disconnect		Disconnect
R6...R8	EMC (2 screws)	-	Do not disconnect	Disconnect	Disconnect
	-	VAR(1 screw)	Do not disconnect	Do not disconnect	Disconnect

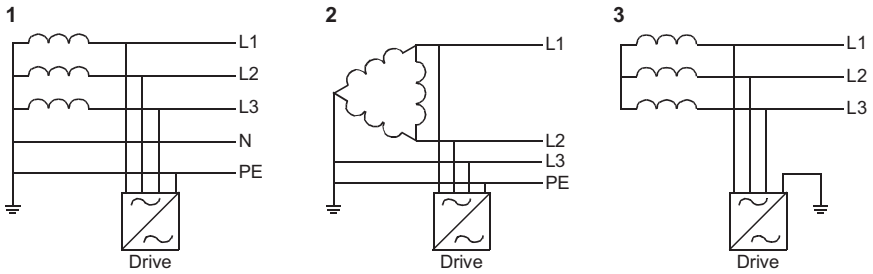

Reinstalling covers

Reinstalling cover, frames size R0...R2

1. Reinstall the cover.
2. Tighten the retaining screw at the bottom with a screwdriver.

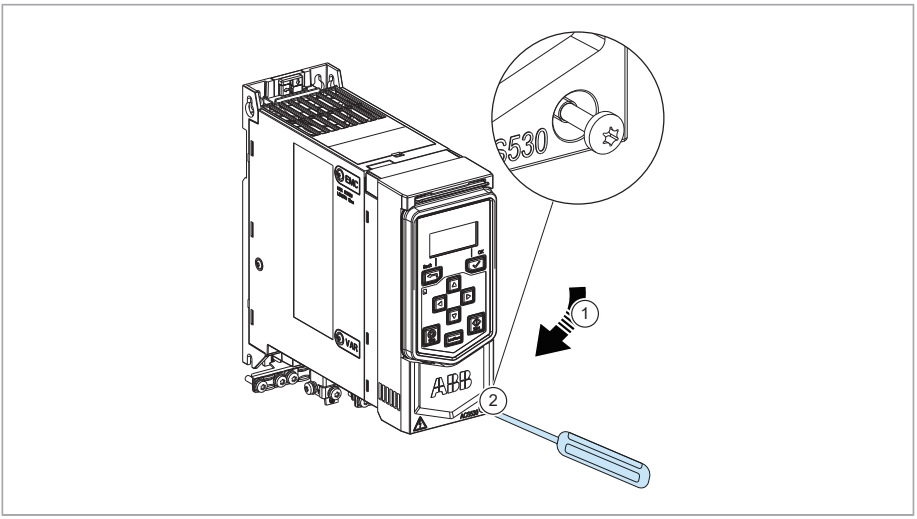

EN

Reinstalling covers, frame size R3, R4

1. Reinstall the module cover. Put the tabs on the cover top in their counterparts on the housing and then press the cover. (1a.1b).
2. Tighten the two retaining screws with a screwdriver.

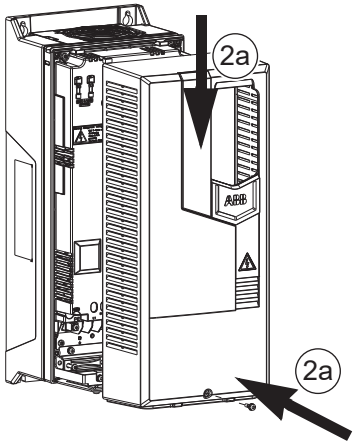

EN

Reinstalling side plates and covers, frames size R5...R8

1. Reinstall the module cover. Put the tabs on the cover top in their counterparts on the housing and then press the cover.
2. Tighten the two retaining screws with a screwdriver.

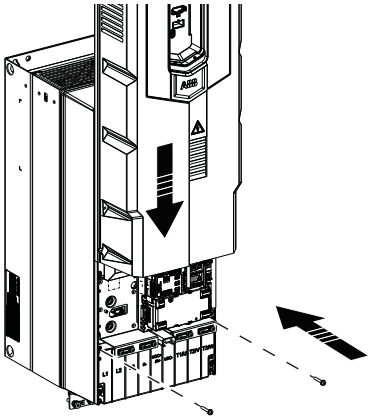

If cable conduit box is used, perform the following:

Frames	Action
R5	1. Slide the cover upwards (1a) and tighten the retaining screws (1b). 2. Reinstall the module cover (2a) and press the cover at bottom. Tighten the two retaining screws (2b) with a screwdriver.

Frames	Action	
	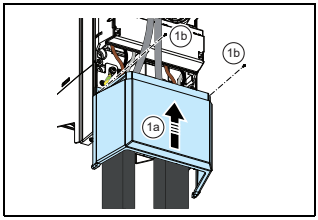	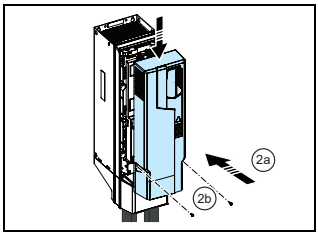
R6...R8	1. Install the side plates (1a) of the cable box. Tighten the retaining screws (1b) with a screw driver. 2. Slide the cover (2a) of the cable box on the module from below until the cover snaps into place. 3. Reinstall the module cover (3a). Tighten the two retaining screws (3b) with a screwdriver.	
	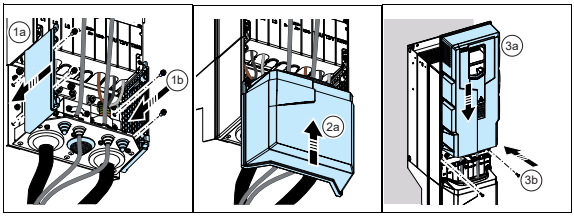	

Start up and use

This section describes how to install and start-up the drive using the basic control panel.

Only limited information may be available in this manual. For detailed information of all Menus and Sub menus, see the *ACS-BP-S basic control panel user manual* (3AXD50000032527 [English]).

Before you start

Make sure that the drive is installed as described in section Install the drive (page 5).

Using the control panel

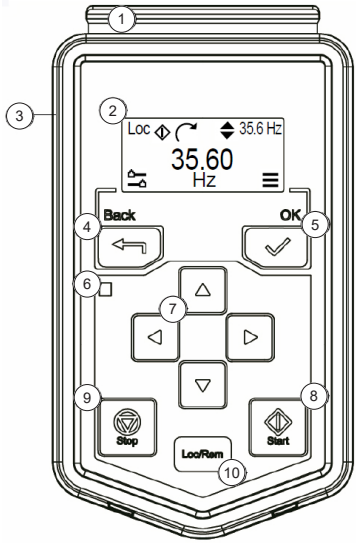

1	**Clip** – Press the clip downward to remove the panel from the drive.
2	**Display** – Shows basic home view 1 by default. See parameter 49.19 Basic panel home view 1.
3	**RJ-45 connector slot** – Located on the back side of the control panel.
4	**Back button** – Moves back to the previous menus. In the Home screen, this button navigates to the Options menu.
5	**OK button** – Confirms the selected action.
6	**Status LEDs** – • **Continuous green** – Indicates that drive is functioning normally. • **Blinking green** – Indicates an active warning in the drive. • **Continuous red** – Indicates an active fault in the drive.
7	**Arrow buttons** – Allows scrolling up/down/left/right on text pages. In the Home screen, the left and right arrow buttons navigate to different (default or user-defined) home screens (see parameter *49.19*, *49.20* and *49.21*).
8	**Start button**– Starts the drive.
9	**Stop button** – Stops the drive.
10	**Loc/Rem button** – Switches between Local/Remote controls. Local control is through control panel and Remote control is through PC or external devices.

EN

Display

The control panel display shows the following elements:

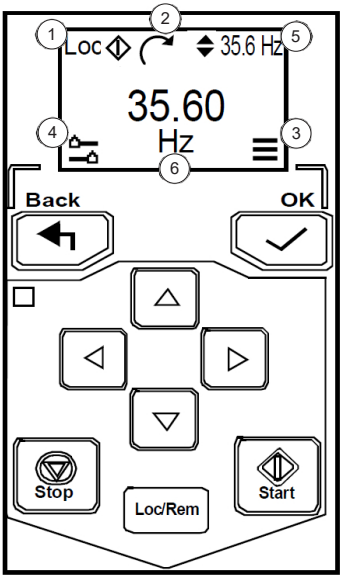

1	**Control location and related icons**: Indicates how the drive is controlled. • **Loc**: The drive is in local control, that is, controlled from the control panel. • **Rem**: The drive is in remote control, that is, controlled through I/O or fieldbus.
2	**Rotation direction**: Shows the forward (clockwise) or reverse (counter-clockwise) rotation of motor.
3	**Main**: Navigates to the Main menu. See description in below sections.
4	**Option**: Navigates to the Options menu. See description in below sections.
5	**Reference value**: Allows to define the reference value of speed, frequency or current and its unit using the Up/Down arrow buttons.
6	**Actual value**: Displays the value of the parameter selected in parameter *49.19 Basic panel home view 1* by default.

EN

Main menu

1	Motor data
2	Motor control
3	Connection macro
4	Diagnostics
5	Energy Efficiency
6	Backup data
7	Parameter settings
8	Complete parameter list

Sub menus

The sub-menu items allows you to change settings and set actions. Some sub menus also have menus and/or option lists. Each sub-menu item has access to

frequently used parameters. For the complete parameter list, go to *Parameter settings* ⚙☰.

Note: The content of the sub menus depend on the drive type.

Motor data

Values in this menu are based on the motor rating plate. See parameter group *98 User motor parameters*.

Note: Values cannot be changed while drive is running.

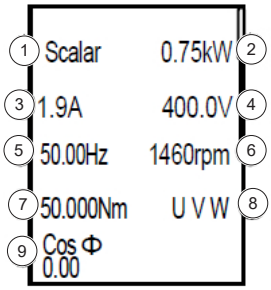

1	1) Motor control mode
2	2) Motor nominal power
3	3) Motor nominal current
4	4) Motor nominal voltage
5	5) Motor nominal frequency
6	6) Motor nominal speed
7	7) Motor nominal torque
8	8) Motor phase order - U V W, U W V
9	9) Motor nominal Cos Φ

Motor control

See parameter group *97 Motor control*.

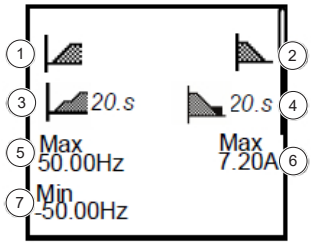

1	**Start mode** – Automatic, constant time, Fast
2	**Stop mode** – Coast, Ramp
3	**Acceleration time** - Time for speed to change from zero to the speed defined by parameter.
4	**Deceleration time** - Time for speed to change from the speed defined by parameter to zero.
5	**Maximum frequency/ Speed** - Maximum allowed frequency/speed.
6	**Maximum current** - Maximum allowed current.
7	**Minimum frequency/ Speed** - Minimum allowed frequency/speed.

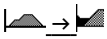

Selected start mode is **Automatic**.

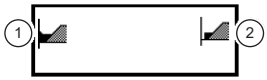

1	1) **Automatic** - Default start mode. Guarantees optimal motor start in most cases. It includes the flying start function (starting into a rotating motor) and the automatic restart function. The drive motor control program identifies the flux as well as the mechanical state of the motor and starts the motor instantly under all conditions.
2	2) **Constant** - Enables constant pre-magnetizing time (the motor start is synchronized with the release of a mechanical brake).
3	3) **Fast** - The pre-magnetizing time is determined automatically, being typically 200 ms to 2 s depending on motor size. This mode does not have a shortcut icon.

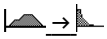

Selected stop mode is **Coast**.

1	**Coast** - default stop mode. Stops by switching off the output semiconductors of the drive.
2	**Ramp** - Stops along the active deceleration ramp.

EN

I/O Connection macro

Values are based on drive type. See parameter *96.04 Macro select*.

1	**Macro** - Displays the selected macro name. For example, **ABB standard (2-wire)**.
2	**I/O Connections** - Displays the selected macro-specific I/O connections. See menu description below.

I/O → 1 2

Selected macro is ABB standard (2-wire)

EN

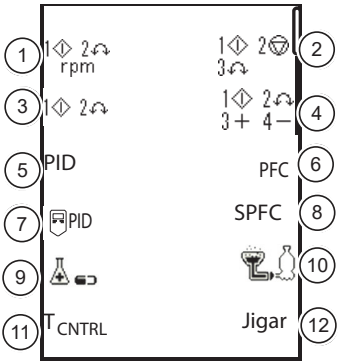

1	1) **ABB standard (2-wire)** - Default macro for general purpose.
2	2) **3-wire macro** - Suitable when the drive is controlled using momentary push buttons.
3	3) **ABB standard (vector)** - Similar to standard macro but uses vector control.
4	4) **Motor potentiometer** - Enables adjusting the motor speed using the two-push buttons.
5	5) **PID** - Suitable for closed-loop control systems such as pressure control, flow control, etc.
6	6) **PFC** - Pump and fan control logic for controlling multiple pumps or fans through relay outputs of the drive.
7	7) **Panel PID** - Suitable for applications where drive is always controlled by PID and the reference comes from an analog input AI1.
8	8) **SPFC** - Variant of PFC and can be used to generate a smaller pressure spike when a new auxiliary motor is put into operation.
9	9) **Pharma** - Suitable for pharmaceutical applications.
10	10) **Plastic extrusion** - Suitable for plastic extrusion application.
11	11) **Torque control** - Similar to standard macro but uses torque control.
12	12 **Jigar** - Suitable for Jigar machine operations.

I/O → I/O

Displays the status of all I/O connections.

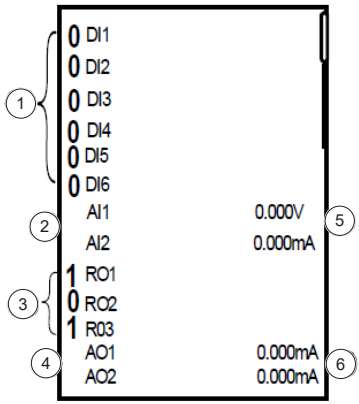

1	**DI** - Digital Inputs DI1...DI6
2	**AI** - Analog Inputs AI1...AI2
3	**RO** - Relay Outputs RO1...RO3
4	**AO1** - Analog Outputs AO1...AO2
5	AI1 and AI2 values
6	AO1 and AO2 values

EN

EN

Diagnostics

Displays the active faults and warnings and how to fix and reset. For information about fault and warning codes, see section Diagnostics (page 139).

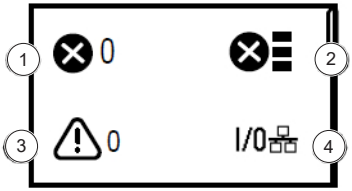

1	**Active Fault** - Displays active faults.
2	**Fault History** - Lists the fault history.
3	**Active Warnings** - Displays active warnings.
4	**I/O status** - I/O settings.

Energy Efficiency

Optimizes the motor flux so that total energy consumption and motor noise level are reduced when drive operates below the nominal load.

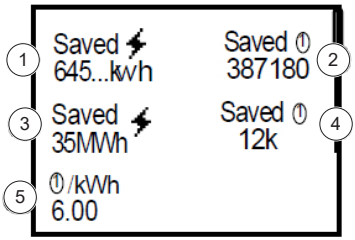

1	**Saved energy in kWh** - Energy saved in kWh compared to direct-on-line motor connection.
2	**Saved money** - Monetary savings compared to direct-on-line motor connection.
3	**Saved energy in MWh** - Energy saved in MWh compared to direct-on-line motor connection.
4	**Saved money x 1000** - Monetary savings in thousands compared to direct-on-line motor connection.
5	**Cost per kWh** - Energy cost (in INR) per kWh.

Backup data

Restore and Backup data between drive and panel.

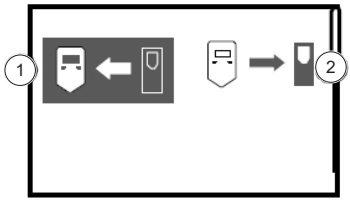

1	Backup from the drive to the control panel.
2	Restore the back up from the panel to the drive. A progress view appears during the backup.

EN

Parameter settings

Contains the complete parameter list and modified parameter list.See Parameter listing (page 53).

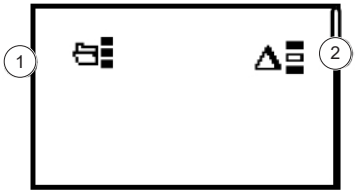

1	Access to complete parameter list from the main menu.
2	Modified parameters list.

Complete parameter list

Contains the complete parameter list. See Parameter listing (page 53).

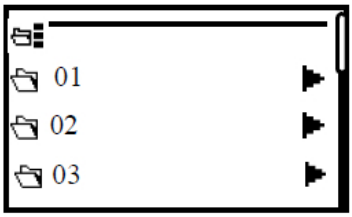

1	Access to the complete parameter list.

Options menu

In the home screen, press **Back** button to navigate to the Options menu. The menu includes the following control panel elements:

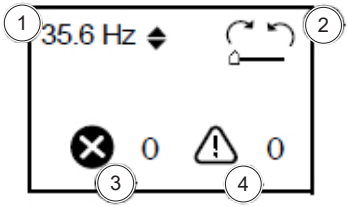

1	**Reference value**: Speed (rpm) or frequency (Hz)
2	**Rotation direction**: Forward or reverse
3	**Faults**: Active fault code
4	**Warnings**: Active warning code

Setting speed or frequency reference

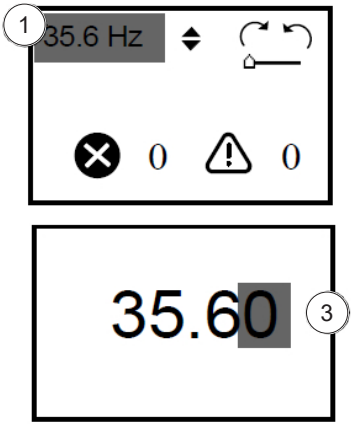

1	In the Options menu , move to the speed or frequency reference (1) item using the arrow buttons.
2	Press the OK button to open the item.
3	Use arrow buttons to set the speed or frequency value.

EN

4	Press OK button to confirm the changes.

Note: Frequency value can be +ve or -ve and it indicates forward (clockwise) or reverse (counter-clockwise) rotation of the motor respectively.

Changing the rotation direction

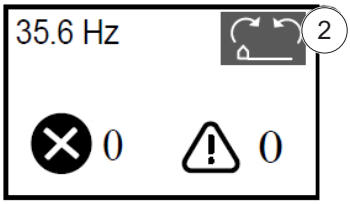

1	In the Options menu, move to the Rotational direction (2) item using the arrow buttons.
2	Press the OK button to change the direction of motor (clockwise or counter-clockwise).

View active faults/warnings

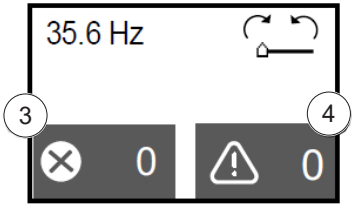

In the Options menu, view active faults (3) or warnings (4). See the fault/warning codes.

Fault and warning messages

Fault messages

The display shows the active fault message when a problem is detected. When a fault message code is displayed: 1. Identify and eliminate the cause. See list of *Fault messages*. 2. Press **Reset** in the Fault view.	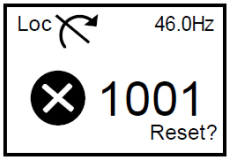

EN

For faults with aux codes, press right arrow to view the aux code.	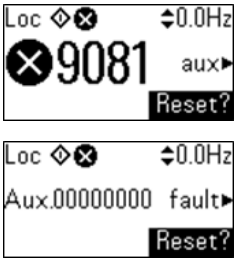

Warning messages

EN

The display shows warning message codes when a problem is detected. To view the warning messages list: 1. Open the **Main menu** ☰. 2. Select **Diagnostics** and open the Warning messages list. See list of *Warning messages*.	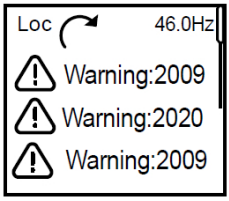

For more information on fault and warning messages, see the firmware manual.

Auto configuration of I/O's and fieldbus module

You can configure the connected optional modules or/and fieldbus modules automatically.

1. Switch off the drive and connect the required modules. For more information on optional modules and its installation, see chapter *Electrical installation* in the hardware manual.
2. Switch on the drive and set parameter *07.35 Drive configuration* bit list values to 0.
3. Restart the drive.
   The drive configures the connected modules, its respective parameters and the fieldbus settings.

For example, to auto configure the BIO-01 module and/or FPBA fieldbus modules, set parameter *07.35 Drive configuration* bit list values to 0 and restart the drive. The drive configures the following parameters automatically:

- sets parameter *07.35 Drive configuration* bits 5 (FPBA-01) and 8(BIO-01) to ON,
- enables BIO-01 related parameters, and

Drive and panel communication failure

The drive does not respond to the panel commands during communication failure.	
The drive and the panel are not compatible.	

Status light

EN

	Continuous green	Indicates that drive is functioning normally.
	Green, blinking	Indicates an active warning in the drive.
	Red, continuous	Indicates an active fault in the drive.

Basic panel mounting template

For installation of basic panel on cabinet door on any other location, you can use the below mounting template drawing for dimension details.

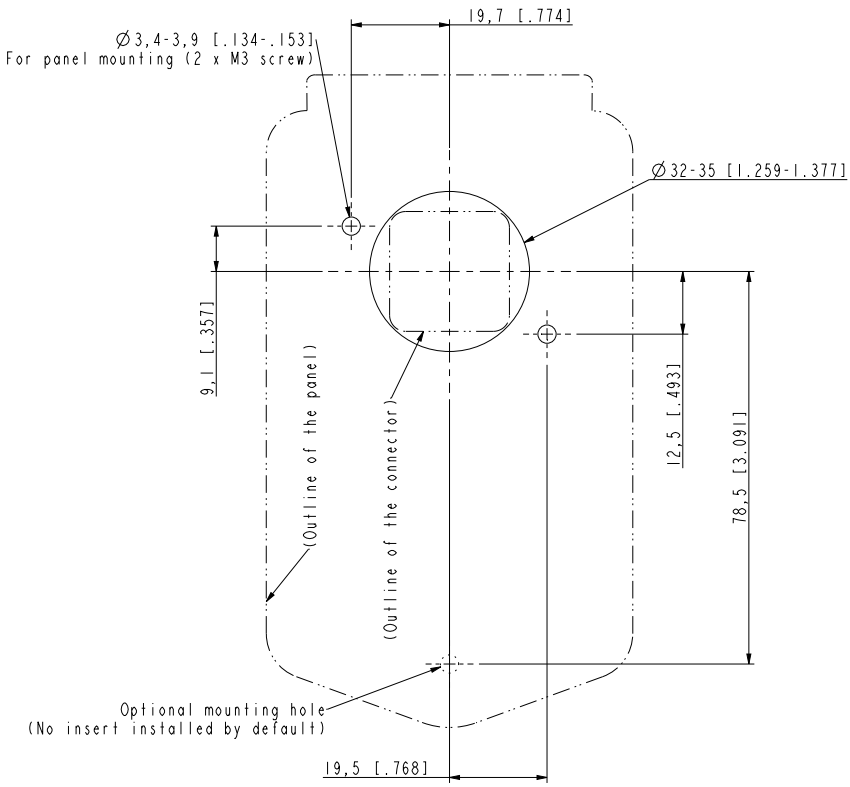

NOTE: Before proceeding check the template scale by measuring printed dimensions.
Template may not be true-to-size. Do NOT drill until measurements are verified.

EN

Parameter listing

Index	Name	Range/List	Unit	Default
01 Actual values				
01.01	Motor speed used	-30000.00…30000.00	rpm	-
01.02	Motor speed estimated	-30000.00…30000.00	rpm	-
01.03	Motor speed%	-1000.00…1000.00	%	-
01.06	Output frequency	-500.00…500.00	Hz	-
01.07	Motor current	0.00…30000.00	A	-
01.08	Motor current% of motor nom	0.0…1000.0	%	-
01.09	Motor current% of drive nom	0.0…1000.0	%	-
01.10	Motor torque	-1600.0…1600.0	%	-
01.11	DC voltage	0.00…2000.00	V	-
01.13	Output voltage	0…2000	V	-
01.14	Output power	-32768.00…32767.00	kW	-
01.15	Output power% of motor nom	-300.00…300.00	%	-
01.17	Motor shaft power	-32768.00…32767.00	kW or hp	-
01.18	Inverter GWh motoring	0…65535	GWh	-
01.19	Inverter MWh motoring	0…1000	MWh	-
01.20	Inverter kWh motoring	0…1000	kWh	-
01.24	Flux actual%	0…200	%	-
01.30	Nominal torque scale	0…400000	N·m	-
01.31	Ambient temperature	-40 ... 120 °C **Note:** This parameter is applicable only for frame sizes R6 or larger.	°C or °F	0
01.50	Current hour kWh	0.00 ... 100000.00	kWh	-

EN

EN

Index	Name	Range/List	Unit	Default
01.51	Previous hour kWh	0.00…100000.00	kWh	-
01.52	Current day kWh	0.00…100000.00	kWh	-
01.53	Previous day kWh	0.00…100000.00	kWh	-
01.54	Cumulative inverter energy	-2000000000.0…2000000000.0	kWh	-
01.55	Inverter GWh counter (reset-table)	0…65535	GWh	-
01.56	Inverter MWh counter (reset-table)	0…1000	MWh	-
01.57	Inverter kWh counter (reset-table)	0…1000	kWh	-
01.58	Cumulative inverter energy (resettable)	-2000000000.0…2000000000.0	kWh	-
01.61	Abs motor speed used	0.00 … 30000.00	rpm	-
01.62	Abs motor speed%	0.00 … 1000.00	%	-
01.63	Abs output frequency	0.00 … 500.00	Hz	-
01.64	Abs motor torque	0.00 … 1600.0	%	-
01.65	Abs output power	0.00 … 32767.00	kW	-
01.66	Abs output power% motor nom	0.00 … 300.00	%	-
01.68	Abs motor shaft power	0.00 … 32767.00	kW or hp	-
03 Input references				
03.01	Panel reference	-100000.00 … 100000.00	-	0.00
03.02	Panel reference remote	-100000.00 … 100000.00	-	0.00
03.05	FB A reference 1	-100000.00 … 100000.00	-	0.00
03.06	FB A reference 2	-100000.00 … 100000.00	-	0.00
03.09	EFB reference 1	-30000.00 … 30000.00	-	0.00
03.10	EFB reference 2	-30000.00 … 30000.00	-	0.00
04 Warnings and faults				
04.01	Tripping fault	0x0000…0xffff	-	0x0000

Index	Name	Range/List	Unit	Default
04.02	Active fault 2	0x0000...0xffff	-	0x0000
04.03	Active fault 3	0x0000...0xffff	-	0x0000
04.06	Active warning 1	0x0000...0xffff	-	0x0000
04.07	Active warning 2	0x0000...0xffff	-	0x0000
04.08	Active warning 3	0x0000...0xffff	-	0x0000
04.11	Latest fault	0x0000...0xffff	-	0x0000
04.12	2nd latest fault	0x0000...0xffff	-	0x0000
04.13	3rd latest fault	0x0000...0xffff	-	0x0000
04.16	Latest warning	0x0000...0xffff	-	0x0000
04.17	2nd latest warning	0x0000...0xffff	-	0x0000
04.18	3rd latest warning	0x0000...0xffff	-	0x0000
04.40	Event word 1	0x0000...0xffff	-	0b0000

Bit	Name	Bit	Name	Bit	Name	Bit	Name
0	User bit 0	1	User bit 1	2..14	Re-served	15	Re-served

04.41	Event word 1 bit 0 code	0x0000...0xffff	-	0x2310h
04.43	Event word 1 bit 1 code	0x0000...0xffff	-	0x3210h
04.45, ...04.47, 04.49...	...	...	...	...
04.71	Event word 1 bit 15 code	0x0000...0xffff	-	0x2330h
05 Diagnostics				
05.01	On-time counter	0...65535	days	0
05.02	Run-time counter	0...65535	days	0
05.03	Hours run	0.0…429496729.5	h	0.0
05.04	Fan on-time counter	0...65535	days	0
05.10	Control board temperature	-100 … 300	°C	0
05.11	Inverter temperature	-40.0 … 160.0	%	0.0
05.20	Diagnostic word 1	0b0000...0b1111	-	0b0000

EN

EN

Index	Name	Range/List	Unit	Default

Bit	Name	Bit	Name	Bit	Name
0	Any warning or fault	4	Overcurrent flt	8	Reserved
1	Any warning	5	Reserved	9	Device over-temp flt
2	Any fault	6	DC over-voltage	10...15	Reserved
3	Reserved	7	DC under-voltage		

Index	Name	Range/List	Unit	Default
05.21	Diagnostic word 2	0b0000...0b1111	-	0b0000

Bit	Name	Bit	Name	Bit	Name
0...9	Reserved	10	Motor over-temp flt	11...15	Reserved

Index	Name	Range/List	Unit	Default
05.22	Diagnostic word 3	0b0000...0b1111	-	0b0000

Bit	Name	Bit	Name	Bit	Name
0...8	Reserved	10	Reserved	12...15	Reserved
9	kWh pulse	11	Fan com-mand		

Index	Name	Range/List	Unit	Default
05.80	Motor speed at fault	-30000.00...30000.00	rpm	0.00
05.81	Output frequency at fault	-500.00...500.00	Hz	0.00
05.82	DC voltage at fault	0.00...2000.00	V	0.00
05.83	Motor current at fault	0.00...30000.00	A	0.00
05.84	Motor torque at fault	-1600.00...1600.00	%	0.0
05.85	Main status word at fault	See parameter 06.11 Main status word.	-	0x0000
05.86	DI delayed status at fault	See parameter 10.02 DI delayed status.	-	0b0000
05.87	Inverter temperature at fault	-40...160	°C	0
05.88	Reference used at fault	-30000.00...30000.00	Hz	0.00

Index	Name	Range/List	Unit	Default
05.99	BIO-01 DIP switch status	- **Note:** This feature is not available with the standard BIO-01. For information on the availability on new BIO-01 module, contact ABB sales team.	-	-

Bit	Name
0	0 = OFF = DO1 on port S1, 1 = ON = AO1 on port S1
1	0 = OFF = DI3 on port S2 1 = ON = DO1 on port S2
2...5	Reserved

EN

06 Control and status words				
06.01	Main control word	0x0000...0xffff	-	0x0000

Bit	Name	Bit	Name	Bit	Name
0	Off1 control	6	Ramp in zero	12	User bit 0
1	Off2 control	7	Reset	13	User bit 1
2	Off3 control	8	Inching 1	14	User bit 2
3	Run	9	Inching 2	15	User bit 3
4	Ramp out zero	10	Remote cmd		
5	Ramp hold	11	Ext ctrl loc		

06.05	AI supervision force	0b0000...0b1111	-	0b0111
06.11	Main status word	0x0000...0xffff	-	0x0000

EN

Index	Name	Range/List	Unit	Default

Bit	Name	Bit	Name	Bit	Name
0	Ready to switch ON	6	Switch-on inhibited	12	User bit 1
1	Ready run	7	Warning	13	User bit 2
2	Ready ref	8	At set point	14	User bit 3
3	Tripped	9	Remote	15	Reserved
4	Off 2 inactive	10	Above limit		
5	Off 3 inactive	11	User bit 0		

06.16	Drive status word 1	0b0000...0b1111	-	0b0000

Bit	Name	Bit	Name	Bit	Name
0	Enabled	5	Started	10	Ext1 active
1	Inhibited	6	Modulating	11	Ext2 active
2	DC charged	7	Limiting	12	Reserved
3	Ready to start	8	Local control	13	Start request
4	Following reference	9	Network control	14	Running
				15	Reserved

06.17	Drive status word 2	0b0000...0b111	-	0b0000

Bit	Name	Bit	Name	Bit	Name
0	Identification run done	5	Safe reference active	11…12	Reserved
1	Magnetized	6	Last speed active	13	Start delay active
2	Torque control	7...8	Reserved	14...15	Reserved
3	Speed control	9	Jogging active		
4	Reserved	10	Above limit		

Index	Name	Range/List	Unit	Default
06.18	Start inhibit status word	0b0000...0xffff	-	0b0000

Bit	Name	Bit	Name	Bit	Name
0	Not ready run	6	Reserved	12	Em Off2
1	Ctrl location changed	7	STO	13	Em Off3
2	SSW inhibit	8	Current calibration ended	14	Auto reset inhibit
3	Fault reset	9	ID run ended	15	Jogging active
4	Lost start enable	10	Reserved		
5	Lost run enable	11	Em Off1		

06.19	Speed control status word	0b0000...0b1111	-	0b0000

Bit	Name	Bit	Name	Bit	Name
0	Zero speed	2...6	Reverse	8...15	Reserved
1	Forward	7	Any constant speed request		

06.20	Constant speed status word	0b0000...0b1111	-	0b0000

Bit	Name	Bit	Name	Bit	Name
0	Constant speed 1	3	Constant speed 4	6	Constant speed 7
1	Constant speed 2	4	Constant speed 5	7...15	Reserved
2	Constant speed 3	5	Constant speed 6		

06.21	Drive status word 3	0b0000...0b1111	-	0b0000

EN

EN

Index	Name	Range/List	Unit	Default

Bit	Name	Bit	Name
0	DC hold active	2	Motor pre-heating active
1	Post-magnetizing active	3…15	Reserved

06.29	MSW bit 10 selection	False[0], True[1], Above limit[2], Other...	-	Above limit[2]
06.30	MSW bit 11 selection	False[0], True[1], Ext ctrl loc[2], Other...	-	Ext ctrl loc[2]
06.31	MSW bit 12 selection	False[0], True[1], Ext run enable [2], Other...	-	Ext run enable [2]
06.32	MSW bit 13 selection	False[0], True[1], Other...	-	False[0]
06.33	MSW bit 14 selection	False[0], True[1], Other...	-	False[0]
07 System info				
07.03	Drive rating id	-	-	Not selected
07.04	Firmware name	-	-	-
07.05	Firmware version	0.00.0.0...255.255.255.255		
07.06	Loading package name	-	-	-
07.07	Loading package version	0.00.0.0...255.255.255.255	-	0.00.0.0
07.11	CPU usage	0…100	%	0
07.35	Drive configuration	0x0000...0xffff	-	0x0000

Bit	Name	Bit	Name	Bit	Name	Bit	Name
0	Reserved	4	FECA-01	8	BIO-01	12	FMBT-21
1	Base unit	5	FPBA-01	9	RIIO-01	13	Reserved
2	Reserved	6	FCAN-01	10	FSCA-01	14	FPNO-21
3	FENA-21	7	Reserved	11	FEIP-21	15	FEPL-02

Index	Name	Range/List	Unit	Default
07.36	Drive configuration 2	0x0000...0xffff	-	0x0000

Bit	Name	Bit	Name	Bit	Name	Bit	Name
0	FLON-01	2	FCNA-01	4	CMOD-02	6	CHDI-01
1	FDNA-01	3	CMOD-01	5	CPTC-01	5…15	Reserved

10 Standard DI, RO				
10.01	DI status	0b0000...0b1111	-	0b0000

Bit	Name	Bit	Name	Bit	Name	Name	Bit
0	DI1	2	DI3	4	DI5	6…15	Reserved
1	DI2	3	DI4	5	DI6		

10.02	DI delayed status	See parameter 10.01 DI status.	-	0b0000
10.03	DI force selection	See parameter 10.01 DI status.	-	0b0000
10.04	DI force data	See parameter 10.01 DI status.	-	0b0000
10.05	DI1 ON delay	0.00...3000.00	s	0.00
10.06	DI1 OFF delay	0.00...3000.00	s	0.00
10.07	DI2 ON delay	0.00...3000.00	s	0.00
10.08	DI2 OFF delay	0.00...3000.00	s	0.00
10.09	DI3 ON delay	0.00...3000.00	s	0.00
10.10	DI3 OFF delay	0.00...3000.00	s	0.00
10.11	DI4 ON delay	0.00...3000.00	s	0.00
10.12	DI4 OFF delay	0.00...3000.00	s	0.00
10.13	DI5 ON delay	0.00...3000.00	s	0.00
10.14	DI5 OFF delay	0.00...3000.00	s	0.00
10.15	DI6 ON delay	0.00...3000.00	s	0.00
10.16	DI6 OFF delay	0.00...3000.00	s	0.00

EN

EN

Index	Name	Range/List	Unit	Default
10.21	RO status	0b0000...0b1111	-	0b0000

Bit	Name	Bit	Name	Bit	Name	Bit	Name
0	RO1	1	RO2	2	RO3	3...15	Reserved

10.22	RO force selection	See parameter 10.21 RO status	-	0b0000
10.23	RO forced data	See parameter 10.21 RO status	-	0b0000
10.24	RO1 source	0...2, 4...24, 27...35, 45...48	-	Ready run[2]

Not energized[0]	Above limit[12]	Ext2 active[23]	RO/DIO control word bit1[41]
Energized[1]	Warning[13]	Remote control[24]	RO/DIO control word bit2[42]
Ready run[2]	Fault[14]	Timed function 1[27]	PFC1[45]
Enabled[4]	Fault (-1) [15]	Timed function 2[28]	PFC2[46]
Started[5]	Fault/Warning[16]	Timed function 3[29]	PFC3[47]
Magnetized[6]	Overcurrent[17]	Reserved[30...32]	PFC4[48]
Running [7]	Overvoltage[18]	Supervision 1[33]	Event word 1 [53]
Ready ref[8]	Drive temp[19]	Supervision 2[34]	User load curve[61]
At setpoint[9]	Undervoltage[20]	Supervision 3[35]	RO/DIO control word[62]
Reverse[10]	Motor temp[21]	Start delay[39]	Other [bit]
Zero speed[11]	Brake command[22]	RO/DIO control word bit0[40]	

10.25	RO1 ON delay	0.0 … 3000.0	s	0
10.26	RO1 OFF delay	0.0 … 3000.0	s	0
10.27	RO2 source	See parameter 10.24 RO1 source	-	Running [7]
10.28	RO2 ON delay	0.0 … 3000.0	s	0

Index	Name	Range/List	Unit	Default
10.29	RO2 OFF delay	0.0 … 3000.0	s	0
10.30	RO3 source	See parameter 10.24 RO1 source	-	Fault (-1) [15]
10.31	RO3 ON delay	0.0 … 3000.0	s	0
10.32	RO3 OFF delay	0.0 … 3000.0	s	0
10.99	RO/DIO control word	0b0000...0b1111	-	0b0000

Bit	Name	Bit	Name	Bit	Name	Bit	Name
0	RO1	1	RO2	2	RO3	3...15	Reserved

10.101	RO1 toggle counter	0...4294967000	-	-
10.102	RO2 toggle counter	0...4294967000	-	-
10.103	RO2 toggle counter	0...4294967000	-	-
11 Standard DIO, FI, FO				
11.21	DI5 configuration	Digital input[0], Frequency input [1]	-	Digital input[0]
11.38	Freq in 1 actual value	0…16000	Hz	-
11.39	Freq in 1 scaled value	-32768.000 … 32767.000	-	-
11.42	Freq in 1 Min	0…16000	Hz	0
11.43	Freq in 1 Max	0…16000	Hz	16000
11.44	Freq in 1 at scaled Min	-32768.000 … 32767.000	-	0.000
11.45	Freq in 1 at scaled Max	-32768.000 … 32767.000	-	50.000
12 Standard AI				
12.02	AI force selection	0b000...0b1111	-	0b0000

Bit	Name	Bit	Name	Bit	Name
0	AI1	1	AI2	2...15	Reserved

12.03	AI supervision function	0...4	-	No action[0]

EN

EN

Index	Name	Range/List	Unit	Default
	No action[0] / Warning [2] / Speed ref safe[4] / Fault[1] / Last speed[3]			
12.04	AI supervision selection	0b000...0b1111	-	0b0000
	Bit / **Name** / **Bit** / **Name** / **Bit** / **Name** 0 / AI1 < MIN / 2 / AI2 < MIN / 4...15 / Reserved 1 / AI1 > MAX / 3 / AI2 > MAX			
12.11	AI1 actual value	0.000…11.000	V	0
12.12	AI1 scaled value	-32768.000 … 32767.000	-	0
12.13	AI1 forced value	0.000…11.000	V	0
12.15	AI1 unit selection	V[2], mA[10]	-	V[2]
12.16	AI1 filter time	0.000 … 30.000	s	0.100
12.17	AI1 Min	0.000…11.000	V	0.000
12.18	AI1 Max	0.000…11.000	V	10.000
12.19	AI1 scaled at AI1 Min	-32768.000 … 32767.000	-	0.000
12.20	AI1 scaled at AI1 Max	-32768.000 … 32767.000	-	50.000
12.21	AI2 actual value	0.000…22.000	mA	0.000
12.22	AI2 scaled value	-32768.000 … 32767.000	-	0.000
12.23	AI2 forced value	0.000…22.000	mA	0.000
12.25	AI2 unit selection	V[2], mA[10]	-	mA
12.26	AI2 filter time	0.000 … 30.000	s	0.100
12.27	AI2 Min	0.000…22.000	mA	4.000
12.28	AI2 Max	0.000…22.000	mA	20.000
12.29	AI2 scaled at AI2 Min	-32768.000 … 32767.000	-	0.000
12.30	AI2 scaled at AI2 Max	-32768.000 … 32767.000	-	50.000

Index	Name	Range/List	Unit	Default
12.101	AI1 percent value	0.00...100.00	%	0.00
12.102	AI2 percent value	0.00...100.00	%	0.00
12.110	AI dead band	0.00...100.00	%	0.40%
13 Standard AO				
13.02	AO force selection	0b0000…0b1111	-	0b0000

Bit	Name	Bit	Name	Bit	Name
0	AO1	1	AO2	2...15	Reserved

13.11	AO1 actual value	0.000 … 22.000	mA	-
13.12	AO1 source	0...1, 3...8, 12, 14, 16, 20, 21, 26...28, 30...32, 37, 38	-	Output frequency[3]

Zero[0]	DC voltage[7]	Abs motor speed used[26]	AO1 data storage[37]
Motor speed used[1]	Output power[8]	Abs motor speed%[27]	AO2 data storage[38]
Output frequency[3]	Freq ref used [14]	Abs output frequency[28]	Other...
Motorcurrent[4]	Process PID out[16]	Abs motor torque[30]	
Motor current% of motor nominal[5]	Temp sensor 1 excitation[20]	Abs output power[31]	
Motor torque[6]	Temp sensor 2 excitation[21]	Abs motor shaft power[32]	

13.13	AO1 forced value	0.000...22.000	mA	0.000
13.15	AO1 unit selection	V[2], mA[10]	-	mA[10]
13.16	AO1 filter time	0.000 … 30.000	s	0.100
13.17	AO1 source Min	-32768.0 … 32767.0	-	0.0
13.18	AO1 source Max	-32768.0 … 32767.0	-	50.0
13.19	AO1 out at AO1 src min	0.000 … 22.000	mA	0.000
13.20	AO1 out at AO1 src Max	0.000 … 22.000	mA	20.000
13.21	AO2 actual value	0.000 … 22.000	mA	0.000

EN

EN

Index	Name	Range/List	Unit	Default
13.22	AO2 source	See parameter 13.12 AO1 source	-	Motor current[4]
13.23	AO2 forced value	0.000 … 22.000	mA	0.000
13.26	AO2 filter time	0.000 … 30.000	s	0.100
13.27	AO2 source min	-32768.0 … 32767.0	-	0.0
13.28	AO2 source Max	-32768.0 … 32767.0	-	3.2
13.29	AO2 out at AO2 src min	0.000 … 22.000	mA	4.000
13.30	AO2 out at AO2 src Max	0.000 … 22.000	mA	20.000
13.91	AO1 data storage	-327.68 … 327.67	-	0.00
13.92	AO2 data storage	-327.68 … 327.67	-	0.00
15 I/O extension module				
15.01	Extension module type	None[0], BREL[5] **Note:** BREL-01 is applicable only for frames R0...R2	-	None[0]
15.02	Detected extension module	None[0], BREL[5]	-	None[0]
15.04	RO/DO status	0000h…FFFFh	-	0000h

Bit	Name	Bit	Name	Bit	Name
0	RO4	3	RO7	6...15	Reserved
1	RO5	4	Reserved		
2	RO6	5	DO1		

15.05	RO/DO force selection	0000h…FFFFh	-	0000h

Bit	Name	Bit	Name	Bit	Name
0	RO4	3	RO7	6...15	Reserved
1	RO5	4	Reserved		
2	RO6	5	DO1		

15.06	RO/DO forced data	0000h…FFFFh	-	0000h

Index	Name	Range/List	Unit	Default

Bit	Name	Bit	Name	Bit	Name
0	RO4	3	RO7	6...15	Reserved
1	RO5	4	Reserved		
2	RO6	5	DO1		

15.07	RO4 source	-	-	Not energized[0]

Not energized[0]	Warning[13]	Timed function 1[27]	PFC1[45]
Energized[1]	Fault[14]	Timed function 2[28]	PFC2[46]
Ready run[2]	Fault (-1)[15]	Timed function 3[29]	PFC3[47]
Reserved[3]	Fault/Warning[16]	Reserved[30...32]	PFC4[48]
Enabled[4]	Overcurrent[17]	Supervision 1[33]	PFC5[49]
Started[5]	Overvoltage[18]	Supervision 2[34]	PFC6[50]
Magnetized[]6	Drive temp[19]	Supervision 3[35]	Reserved[51...52
Running[7]	Undervoltage[20]	Reserved[36...38]	Event word 1[53]
Ready ref[8]	Motor temp[21]	Start delay[39]	User load curve[61]
At setpoint[9]	Brake command[22]	RO/DIO control word bit0[40]	RO/DIO control word[62]
Reverse[10]	Ext2 active[23]	RO/DIO control word bit1[41]	Other...
Zero speed[11]	Remote control[24]	RO/DIO control word bit2[42]	
Above limit[12]	Reserved[25...26]	Reserved[43..44]	

15.08	RO4 ON delay	0.0 … 3000.0	s	0.0
15.09	RO4 OFF delay	0.0 … 3000.0	s	0.0
15.10	RO5 source	See parameter 15.07 RO4 source	-	Not energized[0]
15.11	RO5 ON delay	0.0 … 3000.0	s	0.0
15.12	RO5 OFF delay	0.0 … 3000.0	s	0.0

EN

EN

Index	Name	Range/List	Unit	Default
15.13	RO6 source	See parameter 15.07 RO4 source	-	Not energized[0]
15.14	RO6 ON delay	0.0 … 3000.0	s	0.0
15.15	RO6 OFF delay	0.0 … 3000.0	s	0.0
15.16	RO7 source	See parameter 15.07 RO4 source	-	Not energized[0]
15.17	RO7 ON delay	0.0 … 3000.0	s	0.0
15.18	RO7 OFF delay	0.0 … 3000.0	s	0.0
19 Operation mode				
19.01	Actual operation mode	1, 2, 10, 20	-	Scalar (Hz)[10]

Zero[1]	Min[4]	Reserved[7...9]
Speed[2]	Max[5]	Scalar (Hz)[10]
Torque[3]	Add[6]	Forced magn[20]

Index	Name	Range/List	Unit	Default
19.11	Ext1/Ext2 selection	0...8, 19...21, 25...27, 32...34	-	EXT1[0]

EXT1[0]	DI2[4]	DI6[8]	Supervision 1[25]	FBA A connection loss[33]
EXT2[1]	DI3[5]	Timed function 1[19]	Supervision 2[26]	EFB connection loss[35]
FBA A MCW bit 11[2]	DI4[6]	Timed function 2[20]	Supervision 3[27]	Other...
DI1[3]	DI5[7]	Timed function 3[21]	EFB MCW bit 11[32]	

Index	Name	Range/List	Unit	Default
19.12	Ext1 control mode	Zero[1], Speed[2], Torque[3], Minimum[4], Maximum[5]	-	Speed[2]
19.14	Ext2 control mode	See parameter 19.12 Ext1 control mode	-	Speed[2]
19.16	Local control mode	Speed[0], Torque[1]	-	Speed[0]
19.17	Local control disable	No[0], Yes[1]	-	No[0]
20 Start/stop/direction				
20.01	Ext1 commands	0...6, 11, 12, 14	-	In1 Start; In2 Dir[2]

Index	Name	Range/List	Unit	Default

Not selected[0]	In1P Start; In2 Stop[4]	Fieldbus A[12]
In1 Start[1]	In1P Start; In2 Stop; In3 Dir[5]	Embedded fieldbus[14]
In1 Start; In2 Dir[2]	In1P Start fwd; In2P Start rev; In3 Stop[6]	
In1 Start fwd; In2 Start rev[3]	Control panel[11]	

20.02	Ext1 start trigger type	Edge[0], Level[1]	-	Level[1]
20.03	Ext1 in1 source	0...7, 18...20, 24...26	-	DI1[2]

Always off[0]	DI2[3]	DI5[6]	Timed function 2[19]	Supervision 2[25]
Always on[1]	DI3[4]	DI6[7]	Timed function 3[20]	Supervision 3[26]
DI1[2]	DI4[5]	Timed function [18]	Supervision 1[24]	Other...

20.04	Ext1 in2 source	See parameter 20.03 Ext1 in1 source	-	DI2[3]
20.05	Ext1 in3 source	See parameter 20.03 Ext1 in1 source	-	Always off[0]
20.06	Ext2 commands	0...6, 11, 12, 14	-	Not selected[0]

Not selected[0]	In1 Start fwd; In2 Start rev[3]	In1P Start fwd; In2P Start rev; In3 Stop[6]	Embedded field-bus[14]
In1 Start[1]	In1P Start; In2 Stop[4]	Control panel[11]	Other...
In1 Start; In2 Dir[2]	In1P Start; In2 Stop; In3 Dir[5]	Fieldbus A[12]	

20.07	Ext2 start trigger type	Edge[0], Level[1]	-	Level[1]
20.08	Ext2 in1 source	See parameter 20.03 Ext1 in1 source	-	Always off[0]
20.09	Ext2 in2 source	See parameter 20.03 Ext1 in1 source	-	Always off[0]

EN

EN

Index	Name	Range/List	Unit	Default
20.10	Ext2 in3 source	See parameter 20.03 Ext1 in1 source	-	Always off[0]
20.11	Run enable stop mode	Coast[0], Ramp[1], Torque limit[2]	-	Coast[0]
20.12	Run enable 1 source	0...7, 18...20, 24...26, 30, 32	-	Selected[1]

Not selected[0]	DI3[4]	Timed function [18]	Supervision 2[25]	Other...
Selected[1]	DI4[5]	Timed function 2[19]	Supervision 3[26]	
DI1[2]	DI5[6]	Timed function 3[20]	FBA A MCW bit 3[30]	
DI2[3]	DI6[7]	Supervision 1[24]	EFB MCW bit 3[32]	

20.19	Enable start command	See parameter 20.03 Ext1 in1 source	-	Selected[1]
20.21	Direction	Request[0], Forward[1], Reverse[2]	-	Request[2]
20.22	Enable to rotate	See parameter 20.03 Ext1 in1 source	-	Selected[1]
20.25	Jogging enable	See parameter 20.03 Ext1 in1 source	-	Not selected[0]
20.26	Jogging 1 start source	See parameter 20.03 Ext1 in1 source	-	Not selected[0]
20.27	Jogging 2 start source	See parameter 20.03 Ext1 in1 source	-	20.28Not selected[0]
20.28	Remote to local action	Keep running[0]. Stop[1]	-	Keep running[0]
20.30	Enable signal warning function	000h...FFFh		0000h

Bit	Name	Bit	Name	Bit	Name
0	Enable to rotate	1	Run enable missing	3...15	Reserved

21 Start/stop mode

Index	Name	Range/List	Unit	Default
21.01	Start mode	Fast[0], Const time[1], Automatic[2]	-	Automatic[2]
21.02	Magnetization time	0…10000	ms	500
21.03	Stop mode	Coast[0], Ramp[1], Torque limit[2]	-	Coast[0]
21.04	Emergency stop mode	Ramp stop (Off1)[0], Coast stop (Off2)[1] Eme ramp stop (Off3)[2]	-	Ramp stop (Off1)[1]
21.05	Emergency stop source	0, 1, 3...8	-	Inactive (true)[1]

Active (false)[0]	DI1[3]	DI3[5]	DI5[7]	Other...
Inactive (true)[1]	DI2[4]	DI4[6]	DI6[8]	

21.06	Zero speed limit	0…30000	rpm	30.00
21.07	Zero speed delay	0…30000	ms	0
21.08	DC current control	0b0000…0b1111	-	0b0000

Bit	Name	Bit	Name	Bit	Name
0	DC hold	1	Post mag-netization	2...15	Reserved

21.09	DC hold speed	0.00 … 1000.00	rpm	5.00
21.10	DC current reference	0.0 … 100.0	%	30.0
21.11	Post magnetization time	0…3000	s	0
21.14	Pre-heating input source	0...13	-	Off[0]

Off[0]	DI2[3]	DI5[6]	Supervision 2[9]	Timed function 2[12]
On[1]	DI3[4]	DI6[7]	Supervision 3[10]	Timed function 3[13]
DI1[2]	DI4[5]	Supervision 1[8]	Timed function 1[11]	Other...

21.15	Pre-heating time delay	10...3000	s	60
21.16	Pre-heating current	0.0 … 30.0	%	0.0

EN

EN

Index	Name	Range/List	Unit	Default
21.18	Auto restart time	0.0…10.0	s	10.0
21.19	Scalar start mode	0...4	-	Normal
	Normal[0] / Automatic[2] / Automatic+boost[4] / Flying start+boost[6] / Const time[1] / Torque boost[3] / Flying start [5]			
21.21	DC hold frequency	0.00…1000.00	Hz	5.00
21.22	Start delay	0.00…60.00	s	0.00
21.26	Torque boost current	15.0…300.0	%	100.0
21.27	Torque boost time	0.0...60.0	s	20.0
21.30	Speed compensated stop mode	0...3	-	Off[0]
	Off[0] / Speed comp FWD[1] / Speed comp REV[2] / Speed comp bi-polar[3]			
21.31	Speed compensated stop delay	0.00…1000.00	s	0.00
21.32	Speed comp stop threshold	0…100	%	10
21.34	Force auto restart	Disable[0], Enable[1]	-	Disable[0]
22 Speed reference selection				
22.01	Speed reference unlimited	-30000.00...30000.00	rpm	0.00
22.11	Ext1 speed ref1	0...2, 4, 5, 8, 9, 15...19	-	AI1 scaled[1]
	Zero[0] / FB A ref1[4] / EFB ref2[9] / Frequency input[17] / Other... / AI1 scaled[1] / FB A ref2[5] / Motor potentiometer[15] / Control panel (ref saved)[18] / AI2 scaled[2] / EFB ref1[8] / PID[16] / Control panel (ref copied)[19]			
22.12	Ext1 speed ref2	See parameter 22.11 Speed ref safe	-	Zero[0]
22.13	Ext1 speed function	0...5	-	Ref1[0]

Index	Name	Range/List	Unit	Default

Ref1[0]	Sub (ref1 - ref2)[2]	Min (ref1, ref2)[4]
Add (ref1 + ref2)[1]	Mul (ref1 × ref2)[3]	Max (ref1, ref2)[5]

22.18	Ext2 speed ref1	See parameter 22.11 Speed ref safe	-	Zero[0]
22.19	Ext2 speed ref2	See parameter 22.11 Speed ref safe	-	Zero[0]
22.20	Ext2 speed function	See parameter 22.13 Ext1 speed function	-	Ref1[0]
22.21	Constant speed function	0b0000…0b1111	-	0b0001

Bit	Name	Bit	Name	Bit	Name
0	Constant speed mode	1	Direction enable	2...15	Reserved

22.22	Constant speed sel1	0...7, 18...20, 24...26	-	DI3[4]

Always off[0]	DI2[3]	DI5[6]	Timed function 2[19]	Supervision 2[25]
Always on[1]	DI3[4]	DI6[7]	Timed function 3[20]	Supervision 3[26]
DI1[2]	DI4[5]	Timed function [18]	Supervision 1[24]	Other...

22.23	Constant speed sel2	See parameter 22.22 Constant speed sel1	-	DI4[5]
22.24	Constant speed sel3	See parameter 22.22 Constant speed sel1	-	Always off[0]
22.26	Constant speed 1	-30000.00 … 30000.00	rpm	300.00
22.27	Constant speed 2	-30000.00 … 30000.00	rpm	600.00
22.28	Constant speed 3	-30000.00 … 30000.00	rpm	900.00
22.29	Constant speed 4	-30000.00 … 30000.00	rpm	1200.00
22.30	Constant speed 5	-30000.00 … 30000.00	rpm	1500.00
22.31	Constant speed 6	-30000.00 … 30000.00	rpm	2400.00
22.32	Constant speed 7	-30000.00 … 30000.00	rpm	3000.00
22.41	Speed ref safe	-30000.00 … 30000.00	rpm	0.00

EN

EN

Index	Name	Range/List	Unit	Default
22.42	Jogging 1 ref	-30000.00 … 30000.00	rpm	0.00
22.43	Jogging 2 ref	-30000.00 … 30000.00	rpm	0.00
22.51	Critical speed function	0b0000…0b1111	-	0b0000

Bit	Name	Bit	Name	Bit	Name
0	Enable	1	Sign mode	2...15	Reserved

22.52	Critical speed 1 low	-30000.00 … 30000.00	rpm	0.00
22.53	Critical speed 1 high	-30000.00 … 30000.00	rpm	0.00
22.54	Critical speed 2 low	-30000.00 … 30000.00	rpm	0.00
22.55	Critical speed 2 high	-30000.00 … 30000.00	rpm	0.00
22.56	Critical speed 3 low	-30000.00 … 30000.00	rpm	0.00
22.57	Critical speed 3 high	-30000.00 … 30000.00	rpm	0.00
22.70	Motor potentiometer reference enable	Not selected[0], Selected[1], While running[2]	-	Selected[1]
22.71	Motor potentiometer function	0...4	-	Disabled[0]

Disabled[0]	Enabled (resume always)[2]	Enabled (resume/init to Actual[4]
Enabled (init at stop /power-up)[1]	Enable (init to actual)[3]	

22.72	Motor potentiometer initial value	-32768.00 … 32767.00	-	0.00
22.73	Motor potentiometer up source	0...7, 18...20, 24...26	-	Not used[0]

Not used[0]	DI2[3]	DI5[6]	Timed function 2[19]	Supervision 2[25]
Not used[1]	DI3[4]	DI6[7]	Timed function 3[20]	Supervision 3[26]
DI1[2]	DI4[5]	Timed function [18]	Supervision 1[24]	Other...

22.74	Motor potentiometer down source	See parameter 22.73 Motor potentiometer up source	-	Not used[0]

Index	Name	Range/List	Unit	Default
22.76	Motor potentiometer min value	-32768.00 … 32767.00	-	-50.00
22.77	Motor potentiometer Max value	-32768.00 … 32767.00	-	50.00
22.78	Motor potentiometer ramp up	0.0...3600.0	s	40.0
22.79	Motor potentiometer ramp down	0.0...3600.0	s	40.0
22.80	Motor potentiometer ref act	-32768.00 … 32767.00	-	0.00
22.86	Speed reference actual 6	-30000.00...30000.00	rpm	0.00
22.87	Speed reference actual 7	-30000.00...30000.00	rpm	0.00
23 Speed reference ramp				
23.01	Speed ref ramp input	-30000.00 … 30000.00	rpm	0.00
23.02	Speed ref ramp output	-30000.00 … 30000.00	rpm	0.00
23.11	Ramp set selection	0...7, 20	-	DI5[6]
	Acc/Dec time 1[0] / DI2[3] / DI5[6] / EFB DCU CW bit 10[20] Acc/Dec time 2[1] / DI3[4] / DI6[7] / Other[bit]... DI1[2] / DI4[5] / FBA A[18]			
23.12	Acceleration time 1	0.000 …1800.000	s	20.000
23.13	Deceleration time 1	0.000 …1800.000	s	20.000
23.14	Acceleration time 2	0.000 …1800.000	s	60.000
23.15	Deceleration time 2	0.000 …1800.000	s	60.000
23.20	Acc time jogging	0.000 …1800.000	s	60.000
23.21	Dec time jogging	0.000 …1800.000	s	60.000
23.23	Emergency stop time	0.000 …1800.000	s	3.000
23.28	Variable slope enable	Off[0], On[1]	-	Off[0]
23.29	Variable slope rate	2…30000	ms	50
23.32	Shape time 1	0.000...1800.000	s	0.000
23.33	Shape time 2	0.000...1800.000	s	0.000
24 Speed reference conditioning				

EN

Index	Name	Range/List	Unit	Default
24.01	Used speed reference	-30000.00…30000.00	rpm	0.00
24.02	Used speed feedback	-30000.00…30000.00	rpm	0.00
24.03	Speed error filtered	-30000.00…30000.00	rpm	0.00
24.12	Speed error filter time	0…10000	ms	0
25 Speed control				
25.01	Torque reference speed control	-1600.0 … 1600.0	%	0.0
25.02	Speed proportional gain	0.00 … 250.00	-	5.00
25.03	Speed integration time	0.00 … 1000.00	s	2.50
25.04	Speed derivation time	0.000 … 10.000	s	0.000
25.05	Derivation filter time	0…10000	ms	8
25.06	Acc comp derivation time	0.00 … 1000.00	s	0.00
25.07	Acc comp filter time	0.0 … 1000.0	ms	8.0
25.30	Flux adaption enable	Disable[0], Enable[1]	-	Enable[1]
25.33	Speed controller autotune	Off[0], On[1]	-	Off[0]
25.34	Speed controller autotune mode	Smooth[0], Normal[1], Tight[2]	-	Normal[1]
25.37	Mechanical time constant	0.00...1000.00	s	0.00
25.38	Autotune torque step	0.00...100.00	%	10.00
25.39	Autotune speed step	0.00...100.00	%	10.00
25.40	Autotune repeat times	1...10	-	10
25.53	Torque prop reference	-30000.0 … 30000.0	%	0.0
25.54	Torque integral reference	-30000.0 … 30000.0	%	0.0
25.55	Torque derive reference	-30000.0 … 30000.0	%	0.0
25.56	Torque acc compensation	-30000.0 … 30000.0	%	0.0
26 Torque reference chain				
26.01	Torque reference to TC	-1600.0…1600.0	%	-
26.02	Torque reference used	-1600.0…1600.0	%	-
26.08	Minimum torque ref	-1000.0…0.0	%	-300.0%
26.09	Maximum torque ref	0.0…1000.0	%	300.0%

EN

Index	Name	Range/List	Unit	Default
26.11	Torque ref1 source	-	-	Zero[0]

Zero[0]	FB A ref1[4]	EFB ref2[9]	Frequency input[17]	Other...
AI1 scaled[1]	FB A ref2[5]	Motor potentiometer [15]	Control panel (ref saved)[18]	
AI2 scaled[2]	EFB ref1[8]	PID[16]	Control panel (ref copied)[19]	

26.12	Torque ref2 source	See parameter 26.11 Torque ref1 source	-	Zero[0]
26.13	Torque ref1 function	0...5	-	Ref1[0]

Ref1[0]	Sub (ref1 - ref2)[2]	Min (ref1, ref2)[4]
Add (ref1 + ref2)[1]	Mul (ref1 × ref2)[3]	Max (ref1, ref2)[5]

26.14	Torque ref1/2 selection	0...8	-	Torque reference 1[0]

Torque reference 1[0]	DI1[3]	DI4[6]	Other...
Torque reference 2[1]	DI2[4]	DI5[7]	
Follow Ext1/Ext2 selection[2]	DI3[5]	DI6[8]	

26.17	Torque ref filter time	0.000…30.000	s	0.000
26.18	Torque ramp up time	0.000…60.000	s	0.000
26.19	Torque ramp down time	0.000…60.000	s	0.000
26.20	Torque reversal	0...13	-	Always off[0]

Always off[0]	DI2[3]	DI5[6]	Timed function 2[9]	Supervision 2[12]
Always on[1]	DI3[4]	DI6[7]	Timed function 3[10]	Supervision 3[13]
DI1[2]	DI4[5]	Timed function [8]	Supervision 1[11]	Other...

EN

EN

Index	Name	Range/List	Unit	Default
26.70	Torque reference act 1	-1600.0…1600.0	-	-
26.71	Torque reference act 2	-1600.0…1600.0	-	-
26.72	Torque reference act 3	-1600.0…1600.0	-	-
26.73	Torque reference act 4	-1600.0…1600.0	-	-
26.74	Torque ref ramp out	-1600.0…1600.0	-	-
26.75	Torque reference act 5	-1600.0…1600.0	-	-
26.76	Torque reference act6	-1600.0…1600.0	-	-
26.81	Rush control gain	0.0...10000.0	-	5.0
26.82	Rush control integration time	0.0...10.0	s	2.0
28 Frequency reference chain				
28.01	Frequency ref ramp input	-500.00 … 500.00	Hz	0.00
28.02	Frequency ref ramp output	-500.00 … 500.00	Hz	0.00
28.11	EXT1 frequency ref1	0...2, 4, 5, 8, 9, 15...19	-	AI scaled[1]

Zero[0]	FB A ref1[4]	EFB ref2[9]	Frequency input[17]	Other...
AI1 scaled[1]	FB A ref2[5]	Motor potentiometer [15]	Control panel (ref saved)[18]	
AI2 scaled[2]	EFB ref1[8]	PID[16]	Control panel (ref copied)[19]	

28.12	EXT1 frequency ref2	See parameter 28.11 EXT1 frequency ref1	-	Zero[0]
28.13	EXT1 frequency function	0...5	-	Ref1[0]

Ref1[0]	Sub (ref1 - ref2)[2]	Min (ref1, ref2)[4]
Add (ref1 + ref2)[1]	Mul (ref1 × ref2)[3]	Max (ref1, ref2)[5]

28.15	Ext2 frequency ref1	See parameter 28.11 EXT1 frequency ref1	-	Zero[0]
28.16	Ext2 frequency ref2	See parameter 28.11 EXT1 frequency ref1	-	Zero[0]

Index	Name	Range/List	Unit	Default
28.17	Ext2 frequency function	See parameter 28.13 EXT1 frequency function	-	Ref1[0]
28.21	Constant frequency function	0b0000…0b1111	-	0b0001

Bit	Name	Bit	Name			Bit	Name
0	Constant freq mode	1	Direction enable	2	Frequency step	3...15	Reserved

28.22	Constant frequency sel1	0...7, 18...20, 24...26	-	DI3[4]

Always off[0]	DI2[3]	DI5[6]	Timed function 2[19]	Supervision 2[25]	
Always on[1]	DI3[4]	DI6[7]	Timed function 3[20]	Supervision 3[26]	
DI1[2]	DI4[5]	Timed function [18]	Supervision 1[24]	Other...	

28.23	Constant frequency sel2	See parameter 28.22 Constant frequency sel1	-	DI4[4]
28.24	Constant frequency sel3	See parameter 28.22 Constant frequency sel1	-	Always off[0]
28.26	Constant frequency 1	-500.00 … 500.00	Hz	5.00
28.27	Constant frequency 2	-500.00 … 500.00	Hz	10.00
28.28	Constant frequency 3	-500.00 … 500.00	Hz	15.00
28.29	Constant frequency 4	-500.00 … 500.00	Hz	20.00
28.30	Constant frequency 5	-500.00 … 500.00	Hz	25.00
28.31	Constant frequency 6	-500.00 … 500.00	Hz	40.00
28.32	Constant frequency 7	-500.00 … 500.00	Hz	50.00
28.41	Frequency ref safe	-500.00 … 500.00	Hz	0.00
28.42	Jogging 1 frequency ref	-500.00 … 500.00	Hz	0.00
28.43	Jogging 2 frequency ref	-500.00 … 500.00	Hz	0.00

EN

EN

Index	Name	Range/List	Unit	Default
28.51	Critical frequency function	0b0000…0b1111	-	0b0000

Bit	Name	Bit	Name	Bit	Name
0	Crit freq	1	Sign mode	2...15	Reserved

28.52	Critical frequency 1 low	-500.00 … 500.00	Hz	0.00
28.53	Critical frequency 1 high	-500.00 … 500.00	Hz	0.00
28.54	Critical frequency 2 low	-500.00 … 500.00	Hz	0.00
28.55	Critical frequency 2 high	-500.00 … 500.00	Hz	0.00
28.56	Critical frequency 3 low	-500.00 … 500.00	Hz	0.00
28.57	Critical frequency 3 high	-500.00 … 500.00	Hz	0.00
28.71	Freq ramp set selection	0...7, 20	-	DI5

Acc/Dec time 1[0]	DI2[3]	DI5[6]	EFB DCU CW bit 10[20]
Acc/Dec time 2[1]	DI3[4]	DI6[7]	Other...
DI1[2]	DI4[5]	FBA A [18]	

28.72	Freq acceleration time 1	0.000 …1800.000	s	20.000
28.73	Freq deceleration time 1	0.000 …1800.000	s	20.000
28.74	Freq acceleration time 2	0.000 …1800.000	s	60.000
28.75	Freq deceleration time 2	0.000 …1800.000	s	60.000
28.76	Freq ramp in zero source	0...7	-	Inactive[1]

Act-ive[0]	Inact-ive[1]	DI1[2]	DI2[3]	DI3[4]	DI4[5]	DI5[6]	DI6[7]	Other...

28.82	Shape time 1	0.000...1800.000	s	0.000
28.83	Shape time 2	0.000...1800.000	s	0.000
28.92	Frequency ref act 3	-500.00 … 500.00	Hz	0.00
28.96	Frequency ref act 7	-500.00 … 500.00	Hz	0.00
28.97	Frequency ref unlimited	-500.00 … 500.00	Hz	0.00

30 Limits

Index	Name	Range/List	Unit	Default
30.01	Limit word 1	0b0000…0b1111	-	0b0000

Bit	Name	Bit	Name	Bit	Name
0	Torq lim	5	Tlim max speed	9	Max freq ref lim
1…2	Reserved	6	Tlim min speed	10	Min freq ref lim
3	Torq ref max	7	Max speed ref lim	11...15	Reserved
4	Torq ref min	8	Min speed ref lim		

30.02	Torque limit status	0b0000…0b1111	-	0b0000

Bit	Name	Bit	Name	Bit	Name	Bit	Name
0	Under-voltage	4	Internal current	8	Thermal	11	IGBT overtem-perature
1	Over-voltage	5	Load angle	9	Max cur-rent	12	IGBT overload
2	Minim-um torque	6	Motor pullout	10	User cur-rent	13…15	Re-served
3	Maxim-um torque	7	Re-served	11	Thermal IGBT		

*Only one out of bits 0…3, and one out of bits 9…11 can be ON simultaneously. The bit typically indicates the limit that is exceeded first.

30.09	Current limit monitor time	0...120	s	10.00
30.10	Current limit actions	No action[0], Warn-ing[1], Fault[2]	-	No action[0]
30.11	Minimum speed	-30000.00 … 30000.00	rpm	-1500.00
30.12	Maximum speed	-30000.00 … 30000.00	rpm	1500.00
30.13	Minimum frequency	-500.00 … 500.00	Hz	-50.00
30.14	Maximum frequency	-500.00 … 500.00	Hz	50.00
30.17	Maximum current	0.00 … 3.24	A	2.92

EN

EN

Index	Name	Range/List	Unit	Default
30.18	Torq lim sel	-	-	Toque limit set 1[0]

Torque limit set 1[0]	DI1[2]	DI3[4]	DI5[6]	Re-served[8...10]	Other...
Torque limit set 2[1]	DI2[3]	DI4[5]	DI6[7]	EFB[11]	

30.19	Minimum torque 1	-1600.0 … 0.0	%	-300.0
30.20	Maximum torque 1	0.0 … 1600.0	%	300.0
30.21	Min torque 2 source	-	-	Minimum torque 2[16]

Zero[0]	AI1 scaled[1]	AI2 scaled[2]	Re-served[3...14]	PID[15]	Minimum torque 2[16]	Other...

30.22	Max torque 2 source	-	-	Maximum torque 2[16]

Zero[0]	AI1 scaled[1]	AI2 scaled[2]	Re-served[3...14]	PID[15]	Maximum torque 2[16]	Other...

30.23	Minimum torque 2	-1600.0 … 0.0	%	-300.0
30.24	Maximum torque 2	0.0 … 1600.0	%	300.0
30.26	Power motoring limit	0.00…600.00	%	300.00
30.27	Power generating limit	-600.00…0.00	%	-300.00
30.30	Overvoltage control	Disable[0], Enable[1]	-	Enable[1]
30.31	Undervoltage control	Disable[0], Enable[1]	-	Enable[1]
30.35	Thermal current limitation	Disable[0], Enable[1]	-	Enable[1]
30.36	Speed limit selection	0...10	-	Not selected[0]

Not selec-ted[0]	Ext2 active[3]	DI2[6]	DI4[8]	DI6[10]
Selected[1]	Torque con-trol[4]	DI3[7]	DI5[9]	Other...
Ext1 active[2]	DI1[5]			

Index	Name	Range/List	Unit	Default
30.37	Minimum speed source	0...2, 11	-	Minimum speed[11]
	Zero[0] / AI1 scaled[1] / AI2 scaled[2] / Maximum speed[12] / Other...			
30.38	Maximum speed source	0...2, 12	-	Maximum speed[12]
	Zero[0] / AI1 scaled[1] / AI2 scaled[2] / Maximum speed[12] / Other...			
31 Fault functions				
31.01	External event 1 source	0, 1, 3...8	-	Inactive (true)[1]
	Active (false)[0] / Inactive (true)[1] / DI1[3] / DI2[4] / DI3[5] / DI4[6] / DI5[7] / DI6[8]			
31.02	External event 1 type	Fault[0], Warning[1]	-	Fault[0]
31.03	External event 2 source	See parameter 31.01 External event 1 source	-	Inactive (true)[1]
31.04	External event 2 type	Fault[0], Warning[1]	-	Fault[0]
31.05	External event 3 source	See parameter 31.01 External event 1 source	-	Inactive (true)[1]
31.06	External event 3 type	Fault[0], Warning[1]	-	Fault[0]
31.07	External event 4 source	See parameter 31.01 External event 1 source	-	Inactive (true)[1]
31.08	External event 4 type	Fault[0], Warning[1]	-	Fault[0]
31.09	External event 5 source	See parameter 31.01 External event 1 source	-	Inactive (true)[1]
31.10	External event 5 type	Fault[0], Warning[1]	-	Fault[0]

EN

EN

Index	Name	Range/List	Unit	Default
31.11	Fault reset selection	-	-	Not used[0]

Not used[0]	DI3[4]	Timed function [18]	Supervision 2[25]	Other...
Not used[1]	DI4[5]	Timed function 2[19]	Supervision 3[26]	
DI1[2]	DI5[6]	Timed function 3[20]	FBA A MCW bit 7[30]	
DI2[3]	DI6[7]	Supervision 1[24]	EFB MCW bit 7[32]	

31.12	Autoreset selection	0x0000…0xffff	-	0x0000

Bit	Name	Bit	Name	Bit	Name
0	Overcurrent	6	EarthFault	13	External fault 3
1	Overvoltage	7	Shortcircuit	14	External fault 4
2	Under-voltage	8..9	Reserved	15	External fault 5
3	AI supervision fault	10	Selectable fault		
4	Reserved	11	External fault 1		
5	OverFrequency	12	External fault 2		

31.13	Selectable fault	0x0000…0xffff	-	0x0000
31.14	Number of trials	0…5	-	0
31.15	Total trials time	1.0 … 600.0	s	30.0
31.16	Delay time	0.0 … 120.0	s	0.0
31.19	Motor phase loss	No action[0], Fault[1]	-	Fault[1]
31.20	Earth fault	No action[0], Warning[1], Fault[2]	-	Fault[2]
31.21	Supply phase loss	No action[0], Fault[1]	-	Fault[1]

Index	Name	Range/List	Unit	Default
31.22	STO indication run/stop	Supply phase loss	-	Fault/Fault [0]
		Fault/Fault[0] / Fault/Warning[1] / Fault/Event[2] / Warning/Warning[3]] / Event/Event[4] / No indication/No indication[5]		
31.23	Wiring or earth fault	No action[0], Fault[1]	-	Fault[1]
31.24	Stall function	No action[0], Warning[1], Fault[2]	-	No action[0]
31.25	Stall current limit	0.0 … 1600.0	%	200.0
31.26	Stall speed limit	0.00 … 10000.00	rpm	150.00
31.27	Stall frequency limit	0.00 … 1000.00	Hz	15.00
31.28	Stall time	0…3600	s	20
31.30	Over-speed trip margin	0.00 … 10000.00	rpm	500.00
31.31	Frequency trip margin	0.00 … 10000.00	Hz	15.00
31.35	Main fault function	Fault[0], Warning[1], No action[2]	-	Warning[1]
31.36	Aux fan fault function	Fault[0], Warning[1], No action[2] **Note:** This parameter is only applicable for frames R3 or larger.	-	Warning[1]
31.40	Disable warning messages	000h...FFFh	-	0000h

Bit	Name	Bit	Name
0	Reserved	5	Emergency stop (off2)
1	DC link under-voltage	6	Emergency stop (off1 or off3)
2...4	Reserved	7...15	Reserved

EN

EN

Index	Name	Range/List	Unit	Default
32 Supervision				
32.01	Supervision status	0b0000…0b1111	-	0b0000

Bit	Name	Bit	Name	Bit	Name
0	Supervision 1 active	3	Supervision 4 active	6...15	Reserved
1	Supervision 2 active	4	Supervision 5 active		
2	Supervision 3 active	5	Supervision 6 active		

32.05	Supervision 1 function	0...7	-	Disabled[0]

Disabled[0]	High[2]	Abs high[4]	Abs both[6]
Low[1]	Abs low[3]	Both[5]	Hysteresis[7]
Low falling[8]	High rising[9]		

32.06	Supervision 1 action	No action[0], Warning[1], Fault[2], Fault if running[3]	-	No action[0]
32.07	Supervision 1 signal	0, 1, 3, 4, 6...10, 23...27	-	Frequency[3]

Zero[0]	Current[4]	Output power[8]	Inverter temperature[23]	Process PID setpoint[26]
Speed[1]	Torque[6]	AI1[9]	Process PID output[24]	Process PID deviation[27]
Frequency[3]	DC voltage[7]	AI2[10]	Process PID feedback[25]	Other...

32.08	Supervision 1 filter time	0.000 … 30.000	s	0.000
32.09	Supervision 1 low	-21474836.00… 21474836.00	-	0.00
32.10	Supervision 1 high	-21474836.00… 21474836.00	-	0.00
32.11	Supervision 1 hysteresis	0.00...100000.00	-	0.00
32.15	Supervision 2 function	See parameter 32.05 Supervision 1 function	-	Disabled[0]

Index	Name	Range/List	Unit	Default
32.16	Supervision 2 action	No action[0], Warning[1], Fault[2], Fault if running[3]	-	No action[0]
32.17	Supervision 2 signal	See parameter 32.07 Supervision 1 signal	-	Current[4]
32.18	Supervision 2 filter time	0.000…30.000	s	0.000
32.19	Supervision 2 low	-21474836.00 … 21474836.00	-	0.00
32.20	Supervision 2 high	-21474836.00 … 21474836.00	-	0.00
32.21	Supervision 2 hysteresis	0.00...100000.00	-	0.00
32.25	Supervision 3 function	See parameter 32.05 Supervision 1 function	-	Disabled[0]
32.26	Supervision 3 action	No action[0], Warning[1], Fault[2], Fault if running[3]	-	No action[0]
32.27	Supervision 3 signal	See parameter 32.07 Supervision 1 signal	-	Torque[6]
32.28	Supervision 3 filter time	0.000 … 30.000	s	0.000
32.29	Supervision 3 low	-21474830.00… 21474830.00	-	0.00
32.30	Supervision 3 high	-21474836.00… 21474836.00	-	0.00
32.31	Supervision 3 hysteresis	0.00...100000.00	-	0.00
32.35	Supervision 4 function	See parameter 32.05 Supervision 1 function	-	Disabled[0]
32.36	Supervision 4 action	No action[0], Warning[1], Fault[2], Fault if running[3]	-	No action[0]
32.37	Supervision 4 signal	See parameter 32.07 Supervision 1 signal	-	Zero[0]
32.38	Supervision 4 filter time	0.000 … 30.000	s	0.000
32.39	Supervision 4 low	-21474836.00… 21474836.00	-	0.00
32.40	Supervision 4 high	-21474836.00 … 21474836.00	-	0.00
32.41	Supervision 4 hysteresis	0.00...100000.00	-	0.00

EN

Index	Name	Range/List	Unit	Default
32.45	Supervision 5 function	See parameter 32.05 Supervision 1 function	-	Disabled[0]
32.46	Supervision 5 action	No action[0], Warning[1], Fault[2], Fault if running[3]	-	No action[0]
32.47	Supervision 5 signal	See parameter 32.07 Supervision 1 signal	-	Zero[0]
32.48	Supervision 5 filter time	0.000…30.000	s	0.000
32.49	Supervision 5 low	-21474836.00… 21474836.00	-	0.00
32.50	Supervision 5 high	-21474836.00… 21474836.00	-	0.00
32.51	Supervision 5 hysteresis	0.00...100000.00	-	0.00
32.55	Supervision 6 function	See parameter 32.05 Supervision 1 function	-	Disabled[0]
32.56	Supervision 6 action	No action[0], Warning[1], Fault[2], Fault if running[3]	-	No action[0]
32.57	Supervision 6 signal	See parameter 32.07 Supervision 1 signal	-	Zero[0]
32.58	Supervision 6 filter time	0.000 … 30.000	s	0.000
32.59	Supervision 6 low	-21474836.00… 21474836.00	-	0.00
32.60	Supervision 6 high	-21474836.00… 21474836.00	-	0.00
32.61	Supervision 6 hysteresis	0.00...100000.00	-	0.00
34 Timed functions				
34.01	Timed functions status	0b0000…0b1111	-	0b0000
	Timed function 3			

Bit	Name	Bit	Name	Bit	Name	Bit	Name
0	Timed function 1	1	Timed function 2	2	Timed function 3	3...15	Reserved

34.02	Timer status	0b0000…0b1111	-	0b0000

Index	Name	Range/List	Unit	Default

Bit	Name	Bit	Name	Bit	Name	Bit	Name	Bit	Name
0	Timer 1	3	Timer 4	6	Timer 7	9	Timer 10	12...15	Re-served
1	Timer 2	4	Timer 5	7	Timer 8	10	Timer 11		
2	Timer 3	5	Timer 6	8	Timer 9	11	Timer 12		

34.04	Season/exception day status	0b0000…0b1111	-	0b0000

Bit	Name	Bit	Name	Bit	Name
0	Season 1	3	Season 4	11	Exception holiday
1	Season 2	4...9	Reserved	12...15	Reserved
2	Season 3	10	Exception workday		

34.10	Timed functions	0...7	-	Disabled[0]

Dis-abled[0]	En-abled[1]	DI1[2]	DI2[3]	DI3[4]	DI5[6]	DI4[5]	DI6[7]	Other...

34.11	Timer 1 configuration	0b0000…0b1111	-	0b0111

Bit	Name	Bit	Name	Bit	Name	Bit	Name
0	Monday	4	Friday	8	Season 2	12	Holidays
1	Tuesday	5	Sat-urday	9	Season 3	13	Work-days
2	Wednes-day	6	Sunday	10	Season 4	14...15	Re-served
3	Thursday	7	Season 1	11	Excep-tions		

34.12	Timer 1 start time	00:00:00…23:59:59	-	00:00:00
34.13	Timer 1 duration	00 00:00…07 00:00	-	00:00:00

EN

EN

Index	Name	Range/List	Unit	Default
34.14	Timer 2 configuration	See parameter 34.11 Timer 1 configuration	-	0b0111
34.15	Timer 2 start time	00:00:00…23:59:59	-	00:00:00
34.16	Timer 2 duration	00 00:00…07 00:00	-	00:00:00
34.17	Timer 3 configuration	See parameter 34.11 Timer 1 configuration	-	0b0111
34.18	Timer 3 start time	00:00:00…23:59:59	-	00:00:00
34.19	Timer 3 duration	00 00:00…07 00:00	-	00:00:00
34.20	Timer 4 configuration	See parameter 34.11 Timer 1 configuration	-	0b0111
34.21	Timer 4 start time	00:00:00…23:59:59	-	00:00:00
34.22	Timer 4 duration	00 00:00…07 00:00	-	00:00:00
34.23	Timer 5 configuration	See parameter 34.11 Timer 1 configuration	-	0b0111
34.24	Timer 5 start time	00:00:00…23:59:59	-	00:00:00
34.25	Timer 5 duration	00 00:00…07 00:00	-	00:00:00
34.26	Timer 6 configuration	See parameter 34.11 Timer 1 configuration	-	0b0111
34.27	Timer 6 start time	00:00:00…23:59:59	-	00:00:00
34.28	Timer 6 duration	00 00:00…07 00:00	-	00:00:00
34.29	Timer 7 configuration	See parameter 34.11 Timer 1 configuration	-	0b0111
34.30	Timer 7 start time	00:00:00…23:59:59	-	00:00:00
34.31	Timer 7 duration	00 00:00…07 00:00	-	00:00:00
34.32	Timer 8 configuration	See parameter 34.11 Timer 1 configuration	-	0b0111
34.33	Timer 8 start time	00:00:00…23:59:59	-	00:00:00
34.34	Timer 8 duration	00 00:00…07 00:00	-	00:00:00
34.35	Timer 9 configuration	See parameter 34.11 Timer 1 configuration	-	0b0111
34.36	Timer 9 start time	00:00:00…23:59:59	-	00:00:00
34.37	Timer 9 duration	00 00:00…07 00:00	-	00:00:00

Index	Name	Range/List	Unit	Default
34.38	Timer 10 configuration	See parameter 34.11 Timer 1 configuration	-	0b0111
34.39	Timer 10 start time	00:00:00…23:59:59	-	00:00:00
34.40	Timer 10 duration	00 00:00…07 00:00	-	00:00:00
34.41	Timer 11 configuration	See parameter 34.11 Timer 1 configuration	-	0b0111
34.42	Timer 11 start time	00:00:00…23:59:59	-	00:00:00
34.43	Timer 11 duration	00 00:00…07 00:00	-	00:00:00
34.44	Timer 12 configuration	See parameter 34.11 Timer 1 configuration	-	0b0111
34.45	Timer 12 start time	00:00:00…23:59:59	-	00:00:00
34.46	Timer 12 duration	00 00:00…07 00:00	-	00:00:00
34.60	Season 1 start date	-	-	1.1
34.61	Season 2 start date	-	-	1.1
34.62	Season 3 start date	-	-	1.1
34.63	Season 4 start date	-	-	1.1
34.70	Number of active exceptions	0…16	-	3
34.71	Exception types	0b0000…0b1111	-	0b0000

Bit	Name	Bit	Name	Bit	Name	Bit	Name
0	Exception 1	4	Exception 5	8	Exception 9	12	Exception 13
1	Exception 2	5	Exception 6	9	Exception 10	13	Exception 14
2	Exception 3	6	Exception 7	10	Exception 11	14	Exception 15
3	Exception 4	7	Exception 8	11	Exception 12	15	Exception 16

34.72	Exception 1 start	-	-	1.1
34.73	Exception 1 length	0…60	days	0
34.74	Exception 2 start	-	-	1.1
34.75	Exception 2 length	0…60	days	0

EN

EN

Index	Name	Range/List	Unit	Default
34.76	Exception 3 start	-	-	1.1
34.77	Exception 3 length	0…60	days	0
34.78	Exception day 4	-	-	1.1
34.79	Exception day 5	-	-	1.1
34.80	Exception day 6	-	-	1.1
34.81	Exception day 7	-	-	1.1
34.82	Exception day 8	-	-	1.1
34.83	Exception day 9	-	-	1.1
34.84	Exception day 10	-	-	1.1
34.85	Exception day 11	-	-	1.1
34.86	Exception day 12	-	-	1.1
34.87	Exception day 13	-	-	1.1
34.88	Exception day 14	-	-	1.1
34.89	Exception day 15	-	-	1.1
34.90	Exception day 16	-	-	1.1
34.100	Timed function 1	0b0000…0b1111	-	0b0000

Bit	Name	Bit	Name	Bit	Name	Bit	Name	Bit	Name
0	Timer 1	3	Timer 4	6	Timer 7	9	Timer 10	12...15	Re-served
1	Timer 2	4	Timer 5	7	Timer 8	10	Timer 11		
2	Timer 3	5	Timer 6	8	Timer 9	11	Timer 12		

34.101	Timed function 2	See parameter 34.100 Timed function 1	-	0b0000
34.102	Timed function 3	See parameter 34.100 Timed function 1	-	0b0000
34.110	Boost time function	0b0000…0b1111	-	0b0000

Index	Name	Range/List	Unit	Default

Bit	Name	Bit	Name
0	Timed function 1	2	Timed function 3
1	Timed function 2	04…15	Reserved

Index	Name	Range/List	Unit	Default
34.111	Boost time activation source	0...7	-	Off[0]

	Off[0]	On[1]	DI1[2]	DI2[3]	DI3[4]	DI4[5]	DI5[6]	DI6[7]	Other...

Index	Name	Range/List	Unit	Default
34.112	Boost time duration	00 00:00…07 00:00	-	00:00:00
35 Motor thermal protection				
35.01	Motor estimated temperature	-60…1000 °C	°C	0
35.02	Measured temperature 1	-60…5000 °C	°C	0
35.03	Measured temperature 2	-60…5000 °C	°C,	0
35.05	Motor overload level	0.0...300.0%	%	0.0
35.11	Temperature 1 source	-	-	Estimated temperature[1]

Disabled[0]	Direct temperature[11]	PTC analog I/O [20]
Estimated temperature[1]	KTY83 analog I/O[12]	Therm(0)[21]
KTY84 analog I/O[2]	1 × Pt1000 analog I/O[13]	Therm(1)[22]
1 × Pt100 analog I/O[5]	2 × Pt1000 analog I/O[14]	
2 × Pt100 analog I/O[6]	3 × Pt1000 analog I/O[15]	
3 × Pt100 analog I/O[7]	NI 1000[16]	
PTC DI6 [8]	PTC extension module[19]	

Index	Name	Range/List	Unit	Default
35.12	Temperature 1 fault limit	-60…5000 °C	°C	130 °C
35.13	Temperature 1 warning limit	-60…5000 °C	°C	110 °C
35.14	Temperature 1 AI source	0...2	-	Not selected[0]

Not selected[0]	AI1 actual value[1]	AI2 actual value[2]	Other...

Index	Name	Range/List	Unit	Default
35.21	Temperature 2 source	See parameter 35.11 Temperature 1 source	-	Estimated temperature[1]

EN

EN

Index	Name	Range/List	Unit	Default
35.22	Temperature 2 fault limit	-60…5000 °C	°C	130 °C
35.23	Temperature 2 warning limit	-60…5000 °C	°C	110 °C
35.24	Temperature 2 AI source	See parameter 35.14 Temperature 1 AI source	-	Not selected[0]
35.50	Motor ambient temperature	-60…100 °C	°C	20
35.51	Motor load curve	50…150	%	110
35.52	Zero speed load	25…150	%	70
35.53	Break point	1.00 … 500.00	Hz	45.00
35.54	Motor nominal temperature rise	0…300 °C	°C	80
35.55	Motor thermal time constant	100…10000	s	256
35.56	Motor overload action	No action[0], Warning only[1], and Warning and fault[2]	-	Warning and fault[2]
35.57	Motor overload class	Class 5[0], Class 10[1], Class 20[2], Class 30,[3] Class 40[4]	-	Class 20[2]
36 Load analyzer				
36.01	PVL signal source	-	-	Motor current[4]

Not selected[0]	Motor torque[6]	Speed ref ramp out[11]	Process PID out[16]
Motor speed used[1]	DC voltage[7]	Torque ref used[13]	Other...
Output frequency[3]	Output power[8]	Freq ref used[14]	
Motor current[4]	Speed ref ramp in[10]	Reserved[15]	

36.02	PVL filter time	0.00 … 120.00	s	2.00
36.09	Reset loggers	Done[0], PVL[2]	-	Done[0]
36.10	PVL peak value	-32768.00 … 32767.00	-	0.00
36.11	PVL peak date	1/1/1980...6/5/2159	-	1/1/1980
36.12	PVL peak time	00:00:00...23:59:59	-	00:00:00

Index	Name	Range/List	Unit	Default
36.13	PVL current at peak	-32768.00 … 32767.00	A	0.00
36.14	PVL DC voltage at peak	0.00 … 2000.00	V	0.00
36.15	PVL speed at peak	-30000.00-30000.00	rpm	0.00
36.16	PVL reset date	1/1/1980...6/5/2159	-	1/1/1980
36.17	PVL reset time	00:00:00...23:59:59	-	00:00:00
37 User load curve				
37.01	ULC output status word	0b0000…0b1111	-	0b0000

Bit	Name	Bit	Name	Bit	Name
0	Under load limit	2	Overload limit	4...15	Reserved
1	Within load range	3	Outside load limit		

37.02	ULC supervision signal	0...3	-	Motor torque%[3]

Not selected[0]	Motor current%[2]	Output power % of drive nominal[4]	Other...
Motor speed%[1]	Motor torque%[3]	Output power % of motor nominal[5]	

37.03	ULC overload actions	0...3	-	Disabled[0]

Disabled[0]	Warning[1]	Fault[2]	Warning/Fault[3]

37.04	ULC underload actions	See parameter 37.03 ULC overload actions	-	Disabled[0]
37.11	ULC speed table point 1	-30000.0… 30000.0	rpm	150.0
37.12	ULC speed table point 2	-30000.0… 30000.0	rpm	750.0
37.13	ULC speed table point 3	-30000.0… 30000.0	rpm	1290.0
37.14	ULC speed table point 4	-30000.0… 30000.0	rpm	1500.0
37.15	ULC speed table point 5	-30000.0… 30000.0	rpm	1800.0
37.21	ULC underload point 1	-1600.0… 1600.0	%	10.0
37.22	ULC underload point 2	-1600.0… 1600.0	%	15.0
37.23	ULC underload point 3	-1600.0… 1600.0	%	25.0

EN

EN

Index	Name	Range/List	Unit	Default
37.24	ULC underload point 4	-1600.0… 1600.0	%	30.0
37.25	ULC underload point 5	-1600.0… 1600.0	%	30.0
37.31	ULC overload point 1	-1600.0… 1600.0	%	300.0
37.32	ULC overload point 2	-1600.0… 1600.0	%	300.0
37.33	ULC overload point 3	-1600.0… 1600.0	%	300.0
37.34	ULC overload point 4	-1600.0… 1600.0	%	300.0
37.35	ULC overload point 5	-1600.0… 1600.0	%	300.0
37.41	ULC overload timer	0.0...10000.0	s	20.0
37.42	ULC underload timer	0.0...10000.0	s	20.0
40 Process PID set 1				
40.01	Process PID output actual	-200000.00 … 200000.00	-	0.00
40.02	Process PID feedback actual	-200000.00 … 200000.00	-	0.00
40.03	Process PID setpoint actual	-200000.00 … 200000.00	-	0.00
40.04	Process PID deviation actual	-200000.00 … 200000.00	-	0.00
40.05	Process PID trim output act	-200000.00 … 200000.00	-	0.00
40.06	Process PID status word	0b0000…0b1111	-	0b0000

Bit	Name	Bit	Name	Bit	Name	Bit	Name	Bit	Name
0	PID active	3	PID sleep mode	6	Tracking mode	9	Deadband active	12	Internal setpoint active
1	Setpoint frozen	4	Sleep boost	7	Output limit high	10	PID set	13...15	Reserved
2	Output frozen	5	Trim mode	8	Output limit low	11	Reserved		

40.07	Set 1 PID operation mode	0...2	-	Off[0]

Index	Name	Range/List	Unit	Default
	Off[0]	On[1]	On when drive running[2]	
40.08	Set 1 feedback 1 source	0...3, 8...10	-	AI2 percent[9]
	Not selected[0]	Freq in scaled[3]	Feedback data storage[10]	
	AI1 scaled[1]	AI1 percent[8]	Other.	
	AI2 scaled[2]	AI2 percent[9]		
40.09	Set 1 feedback 2 source	See parameter 40.08 Set 1 feedback 1 source	-	Not selected[0]
40.10	Set 1 feedback function	0...11	-	In1[0]
	In1[0]	In1*In2[3]	MAX(In1,In2)[6]	sqrt(In1-In2)[9]
	In1+In2[1]	In1/In2[4]	AVE(In1,In2)[7]	sqrt(In1+In2)[10]
	In1-In2[2]	MIN(In1,In2)[5]	sqrt(In1)[8]	sqrt(In1)+sqrt(In2)[11]
40.11	Set 1 feedback filter time	0.000 … 30.000	s	0.000
40.14	Set 1 setpoint scaling	-200000.00...200000.00	-	0.00
40.15	Set 1 output scaling	-200000.00...200000.00	-	0.00
40.16	Set 1 setpoint 1 source	0, 2...4, 8, 10...16, 19, 20, 24	-	AI1 percent[11]
	Not selected[0]	Motor potentiometer[8]	Control panel (ref saved)[13]	EFB ref1[19]
	Internal setpoint[2]	Freq in scaled[10]	Control panel (ref copied)[14]	EFB ref2[20]
	AI1 scaled[3]	AI1 percent[11]	FB A ref1[15]	Setpoint data storage[24]
	AI2 scaled[4]	AI2 percent[12]	FB A ref2[16]	Other...
40.17	Set 1 setpoint 2 source	See parameter 40.16 Set 1 setpoint 1 source	-	Not selected[0]
40.18	Set 1 setpoint function	See parameter 40.10 Set 1 feedback function	-	In1[0]
40.19	Set 1 internal setpoint sel1	0...7, 18...23	-	Not selected[0]

EN

EN

Index	Name	Range/List	Unit	Default
		Not selected[0] Selected[1] DI1[2] DI2[3] DI3[4] DI4[5] DI5[6] DI6[7] Timed function [18] Timed function 2[19] Timed function 3[20] Supervision 1[21] Supervision 2[22] Supervision 3[23] Other...		
40.20	Set 1 internal setpoint sel2	See parameter 40.19 Set 1 internal setpoint sel1	-	Not selected[0]
40.21	Set 1 internal setpoint 1	-200000.00 … 200000.00	PID unit 1	0.00
40.22	Set 1 internal setpoint 2	-200000.00 … 200000.00	PID unit 1	0.00
40.23	Set 1 internal setpoint 3	-200000.00 … 200000.00	PID unit 1	0.00
40.24	Set 1 internal setpoint 0	-200000.00 … 200000.00	PID unit 1	0.00
40.26	Set 1 setpoint min	-200000.00 … 200000.00	PID unit 1	0.00
40.27	Set 1 setpoint Max	-200000.00 … 200000.00	PID unit 1	200000.00
40.28	Set 1 setpoint increase time	0.0 … 1800.0	s	0.0
40.29	Set 1 setpoint decrease time	0.0 … 1800.0	s	0.0
40.30	Set 1 setpoint freeze enable	See parameter 40.19 Set 1 internal setpoint sel1	-	Not selected[0]
40.31	Set 1 deviation inversion	Not inverted (Ref - Fbk)[0], Inverted (Fbk - Ref)[1]	-	Not inverted (Ref - Fbk)[0]
40.32	Set 1 gain	0.01 … 100.00	-	1.00
40.33	Set 1 integration time	0.0 … 9999.0	s	60.0
40.34	Set 1 derivation time	0.000 … 10.000	s	0.000
40.35	Set 1 derivation filter time	0.0 … 10.0	s	0.0
40.36	Set 1 output min	-200000.00 … 200000.00	-	0.00

Index	Name	Range/List	Unit	Default
40.37	Set 1 output max	-200000.00 … 200000.00	-	100.00
40.38	Set 1 output freeze enable	See parameter 40.19 Set 1 internal setpoint sel1	-	Not selected[0]
40.39	Set 1 deadband range	0.00 … 200000.00	-	0.00
40.40	Set 1 deadband delay	0.0 … 3600.0	s	0.0
40.43	Set 1 sleep level	0.0 … 200000.0	-	0.0
40.44	Set 1 sleep delay	0.0 … 3600.0	s	60.0
40.45	Set 1 sleep boost time	0.0 … 3600.0	s	0.0
40.46	Set 1 sleep boost step	0.00 … 200000.00	PID unit 1	0.00
40.47	Set 1 wake-up deviation	-200000.00 … 200000.00	PID unit 1	0.00
40.48	Set 1 wake-up delay	0.00 … 60.00	s	0.50
40.49	Set 1 tracking mode	See parameter 40.19 Set 1 internal setpoint sel1	-	Not selected[0]
40.50	Set 1 tracking ref selection	0...4	-	Not selected[0]
	Not selected[0] / AI1 scaled[1] / AI2 scaled[2] / FB A ref1[3] / FB A ref2[4] / Other...			
40.51	Set 1 trim mode	Off[0], Direct[1], Proportional[2], Combined[3]	-	Off[0]
40.52	Set 1 trim selection	Torque[1], Speed[2], Frequency[3]	-	Speed[2]
40.53	Set 1 trimmed ref pointer	0...4	-	Not selected[0]
	Not selected[0] / AI1 scaled[1] / AI2 scaled[2] / FB A ref1[3] / FB A ref2[4] / Other...			
40.54	Set 1 trim mix	0.000...1.000	-	0.000
40.55	Set 1 trim adjust	-100.000...100.000	-	1.000
40.56	Set 1 trim source	PID ref[1], PID output[2]	-	PID output[2]
40.57	PID set1/set2 selection	0...7, 18...23	-	PID set 1[0]

EN

EN

Index	Name	Range/List	Unit	Default

PID set 1[0]	DI2[3]	DI5[6]	Timed function 2[19]	Supervision 2[22]
PID set 2[1]	DI3[4]	DI6[7]	Timed function 3[20]	Supervision 3[23]
DI1[2]	DI4[5]	Timed function [18]	Supervision 1[21]	Other...

40.58	Set 1 increase prevention	No[0], Limiting[1], Other...	-	No
40.59	Set 1 decrease prevention	No[0], Limiting[1], Other...	-	No
40.60	Set 1 PID activation source	0...8	-	On[1]

Off[0]	Follow Ext1/Ext2 selection [2]	DI2[4]	DI4[6]	DI6[8]
On[1]	DI1[3]	DI3[5]	DI5[7]	Other...

40.61	Setpoint scaling actual	-200000.00 … 200000.00	-	0.00
40.62	PID internal setpoint actual	-200000.00 … 200000.00	PID unit 1	0.00
40.65	Trim auto connection	Disable [0], Enable[1]	-	Disable[0]
40.79	Set 1 units	0...31	Depends on selection	°C[8]

User text[0]	inH2O[7]	l/min[14]	ft^3/m[21]	gal/m[28]
%[1]	°C[8]	l/h[15]	ft^3/h[22]	in wg[29]
bar[2]	°F[9]	m^3/s[16]	ppm[23]	MPa[30]
kPa[3]	mbar[10]	m^3/m[17]	inHg[24]	ftWC[31]
Pa[4]	m^3/h[11]	km^3/h[18]	kCFM[25]	
psi[5]	dm^3/h[12]	gal/s[19]	inWC[26]	
CFM[6]	l/s[13]	ft^3/s[20]	GPM[27]	

40.80	Set 1 PID output min source	None[0], Set1 output min[1], other...	-	Set1 output min[1]

Index	Name	Range/List	Unit	Default
40.81	Set 1 PID output max source	None[0], Set1 output max[1], other...	-	Set1 output max[1]
40.89	Set 1 setpoint multiplier	-200000.00 … 200000.00	-	1.00
40.90	Set 1 feedback multiplier	-200000.00 … 200000.00	-	1.00
40.91	Feedback data storage	-327.68…327.68	-	0.00
40.92	Setpoint data storage	-327.68…327.68	-	0.00
40.96	Process PID output%	-100.00...100.00	%	0.00
40.97	Process PID feedback%	-100.00...100.00	%	0.00
40.98	Process PID setpoint%	-100.00...100.00	%	0.00
40.99	Process PID deviation%	-100.00...100.00	%	0.00
41 Process PID set 2				
41.08	Set 2 feedback 1 source	See parameter 40.08 Set 1 feedback 1 source	-	AI2 percent[9]
41.09	Set 2 feedback 2 source	See parameter 40.09 Set 1 feedback 2 source	-	Not selected[0]
41.10	Set 2 feedback function	See parameter 40.10 Set 1 feedback function	-	In1[0]
41.11	Set 2 feedback filter time	0.000 … 30.000	s	0.000
41.14	Set 2 setpoint scaling	-200000.00 … 200000.00	-	0.00
41.15	Set 2 output scaling	-200000.00 … 200000.00	-	0.00
41.16	Set 2 setpoint 1 source	See parameter 40.16 Set 1 setpoint 1 source	-	AI percent[11]
41.17	Set 2 setpoint 2 source	See parameter 40.17 Set 1 setpoint 2 source	-	Not selected[0]
41.18	Set 2 setpoint function	See parameter 40.18 Set 1 setpoint function	-	In1[0]
41.19	Set 2 internal setpoint sel1	See parameter 40.19 Set 1 internal setpoint sel1	-	Not selected[0]
41.20	Set 2 internal setpoint sel2	See parameter 40.20 Set 1 internal setpoint sel2	-	Not selected[0]

EN

EN

Index	Name	Range/List	Unit	Default
41.21	Set 2 internal setpoint 1	-200000.00 … 200000.00	PID unit 1	0.00
41.22	Set 2 internal setpoint 2	-200000.00 … 200000.00	PID unit 1	0.00
41.23	Set 2 internal setpoint 3	-200000.00 … 200000.00	PID unit 1	0.00
41.24	Set 1 internal setpoint 0	-200000.00 … 200000.00	PID unit 1	0.00
41.26	Set 2 setpoint min	-200000.00 … 200000.00	PID unit 1	0.00
41.27	Set 2 setpoint max	-200000.00 … 200000.00	PID unit 1	200000.00
41.28	Set 2 setpoint increase time	0.0 … 1800.0	s	0.0
41.29	Set 2 setpoint decrease time	0.0 … 1800.0	s	0.0
41.30	Set 2 setpoint freeze enable	See parameter 40.30 Set 1 setpoint freeze enable	-	Not selected[0]
41.31	Set 2 deviation inversion	See parameter 40.31 Set 1 tracking mode	-	Not inverted (Ref - Fbk)[0]
41.32	Set 2 gain	0.01 … 100.00	-	1.00
41.33	Set 2 integration time	0.0 … 9999.0	s	60.0
41.34	Set 2 derivation time	0.000 … 10.000	s	0.000
41.35	Set 2 derivation filter time	0.0 … 10.0	s	0.0
41.36	Set 2 output min	-200000.00 … 200000.00	-	0.00
41.37	Set 2 output max	-200000.00 … 200000.00	-	100.00
41.38	Set 2 output freeze enable	See parameter 40.38 Set 1 output freeze enable	-	Not selected[0]
41.39	Set 1 deadband range	0.00 … 200000.00	-	0.00
41.40	Set 1 deadband delay	0.0 … 3600.0	s	0.0
41.43	Set 2 sleep level	0.0 … 200000.0	-	0.0
41.44	Set 2 sleep delay	0.0 … 3600.0	s	60.0

Index	Name	Range/List	Unit	Default
41.45	Set 2 sleep boost time	0.0 … 3600.0	s	0.0
41.46	Set 2 sleep boost step	0.00 … 200000.00	PID unit 1	0.00
41.47	Set 2 wake-up deviation	-200000.00 … 200000.00	PID unit 1	0.00
41.48	Set 2 wake-up delay	0.00 … 60.00	s	0.50
41.49	Set 2 tracking mode	See parameter 40.49 Set 1 tracking mode	-	Not selected[0]
41.50	Set 2 tracking ref selection	See parameter 40.50 Set 1 tracking ref selection	-	Not selected[0]
41.51	Set 2 trim mode	See parameter 40.51 Set 1 trim mode	-	Off[0]
41.52	Set 2 trim selection	See parameter 40.52 Set 1 trim selection	-	Speed[2]
41.53	Set 2 trimmed ref pointer	See parameter 40.53 Set 1 trimmed ref pointer	-	Not selected[0]
41.54	Set 2 trim mix	See parameter 40.54 Set 1 trim mix	-	0.000
41.55	Set 2 trim adjust	See parameter 40.55 Set 2 trim adjust	-	1.000
41.56	Set 2 trim source	See parameter 40.56 Set 1 trim source	-	PID output[2]
41.58	Set 2 increase prevention	See parameter 40.58 Set 1 increase prevention	-	No
41.59	Set 2 decrease prevention	See parameter 40.59 Set 1 decrease prevention	-	No
41.60	Set 2 PID activation source	0...8	-	On[1]
	Off[0] / Follow Ext1/Ext2 selection [2] / DI2[4] / DI4[6] / DI6[8]			
	On[1] / DI1[3] / DI3[5] / DI5[7] / Other...			
41.79	Set 2 units	See parameter 40.79 Set 1 units	Depends on selection	°C[8]

EN

EN

Index	Name	Range/List	Unit	Default
41.80	Set 1 PID output min source	None[0], Set2 output min[1], other...	-	Set2 output min[1]
41.81	Set 1 PID output max source	None[0], Set2 output max[1], other...	-	Set2 output max[1]
41.89	Set 2 setpoint multiplier	See parameter 40.89 Set 1 setpoint multiplier	-	1.00
41.90	Set 2 feedback multiplier	See parameter 40.90 Set 1 feedback multiplier	-	1.00
43 Brake chopper This parameter group is applicable only for frames R0...R3.				
43.01	Braking resistor temperature	0.0 … 120.0	%	-
43.06	Brake chopper function	0...3	-	Disabled[0]
	Disabled[0] / Enabled with thermal model[1] / Enabled without thermal model[2] / Overvoltage peak protection[3]			
43.07	Brake chopper run enable	Off[0], On[1], Other...	-	On[1]
43.08	Brake resistor thermal tc	0…10000	s	0
43.09	Brake resistor Pmax cont	0.00 … 10000.00	kW	0.00
43.10	Brake resistance	0.0 … 1000.0	ohm	0.0
43.11	Brake resistor fault limit	0…150	%	105
43.12	Brake resistor warning limit	0…150	%	95
44 Mechanical brake control				
44.01	Brake control status	0b0000…0b1111	-	0b0000
44.06	Brake control enable	0...7, 18...20, 24...26	-	Not selected[0]

Not selected[0]	DI2[3]	DI5[6]	Timed function 2[19]	Supervision 2[25]
Selected[1]	DI3[4]	DI6[7]	Timed function 3[20]	Supervision 3[26]
DI1[2]	DI4[5]	Timed function [18]	Supervision 1[24]	Other...

44.08	Brake open delay	0.00 … 5.00	s	0.00

Index	Name	Range/List	Unit	Default
44.13	Brake close delay	0.00 … 60.00	s	0.00
44.14	Brake close level	0.00 … 1000.00	rpm	100.00
45 Energy efficiency				
45.01	Saved GW hours	0…65535	GWh	0
45.02	Saved MW hours	0…999	MWh	0
45.03	Saved kW hours	0.0 … 999.9	kWh	0.0
45.04	Saved energy	0...214748368.0	kWh	0.0
45.05	Saved money x1000	0…4294967295	INR	0
45.06	Saved money	0.00 … 999.99	INR	0.00
45.07	Saved amount	0.00 … 21474830.00	INR	0.00
45.08	CO2 reduction in kilotons	0…65535	metric kiloton	0
45.09	CO2 reduction in tons	0.0 … 999.9	metric ton	0.0
45.10	Total saved CO2	0.0 … 214748304.0	metric ton	0.0
45.11	Energy optimizer	Disable[0], Enable[1]	-	Disable[0]
45.12	Energy tariff 1	0.000 … 4294966.296	INR	5.000
45.13	Energy tariff 2	0.000 … 4294966.296	INR	6.000
45.14	Tariff selection	0...7	-	Energy tariff 1[0]
	Energy tariff 1[0] / Energy tariff 2[1] / DI1[2] / DI2[3] / DI3[4] / DI4[5] / DI5[6] / DI6[7] / Other...			
45.17	Tariff currency unit	Local currency[100], EUR[101], USD[102]	Local currency	Local currency[100]
45.18	CO2 conversion factor	0.000 … 65.535	tn/ MWh	0.500
45.19	Comparison power	0.0 … 10000000.0	kW	0.00
45.21	Energy calculations reset	Done[0], Reset[1]	-	Done[0]
45.24	Hourly peak power value	-3000.00 … 3000.00	kW	0.00
45.25	Hourly peak power time	00:00:00...00:00:00	-	00:00:00
45.26	Hourly total energy (reset-table)	-3000.00 … 3000.00	kWh	0.00

EN

EN

Index	Name	Range/List	Unit	Default
45.27	Daily peak power value (resettable)	-3000.00 … 3000.00	kW	0.00
45.28	Daily peak power time	00:00:00...00:00:00	-	00:00:00
45.29	Daily total energy (resettable)	-30000.00 … 30000.00	kWh	0.00
45.30	Last day total energy	-30000.00 … 30000.00	kWh	0.00
45.31	Monthly peak power value (resettable)	-3000.00 … 3000.00	kW	0.00
45.32	Monthly peak power date	1/1/1980...6/5/2159	-	1/1/1980
45.33	Monthly peak power time	00:00:00...00:00:00	-	00:00:00
45.34	Monthly total energy (resettable)	-1000000.00 … 1000000.00	kWh	0.00
45.35	Last month total energy	-1000000.00 … 1000000.00	kWh	0.00
45.36	Lifetime peak power value	-3000.00 … 3000.00	kW	0.00
45.37	Lifetime peak power date	1/1/1980...6/5/2159	-	1/1/1980
45.38	Lifetime peak power time	00:00:00...00:00:00	-	00:00:00
46 Monitoring/scaling settings				
46.01	Speed scaling	0.10 … 30000.00	rpm	1500.00
46.02	Frequency scaling	0.10 … 1000.00	Hz	50.00
46.03	Torque scaling	0.1 … 1000.0	%	100.0
46.04	Power scaling	0.10…30000.00	kW or hp	1000.00
46.05	Current scaling	0…30000	A	10000
46.06	Speed ref zero scaling	0.00 … 30000.00	rpm	0.00
46.07	Frequency ref zero scaling	0.00 … 1000.00	Hz	0.00
46.11	Filter time motor speed	2…20000	ms	500
46.12	Filter time output frequency	2…20000	ms	500
46.13	Filter time motor torque	2…20000	ms	100
46.14	Filter time power	2…20000	ms	100
46.21	At speed hysteresis	0.00 … 30000.00	rpm	50.00
46.22	At frequency hysteresis	0.00 … 1000.00	Hz	2.00
46.31	Above speed limit	0.00 … 30000.00	rpm	1500.00

Index	Name	Range/List	Unit	Default
46.32	Above frequency limit	0.00 … 1000.00	Hz	50.00
46.33	Above torque limit	0.0 … 1600.0	%	300.0
46.41	kWh pulse scaling	0.001...1000.000	kWh	1.000
46.43	Power decimals	0...3	-	2
46.44	Current decimals	0...3	-	1
47 Data storage				
47.01	Data storage 1 real32	-2147483.000…2147483.000	-	0.000
47.02	Data storage 2 real32	-2147483.000…2147483.000	-	0.000
47.03	Data storage 3 real32	-2147483.000…2147483.000	-	0.000
47.04	Data storage 4 real32	-2147483.000…2147483.000	-	0.000
47.11	Data storage 1 int32	-2147483648 … 2147483647	-	0
47.12	Data storage 2 int32	-2147483648 … 2147483647	-	0
47.13	Data storage 3 int32	-2147483648 … 2147483647	-	0
47.14	Data storage 4 int32	-2147483648 … 2147483647	-	0
47.21	Data storage 1 int16	-32768 … 32767	-	0
47.22	Data storage 2 int16	-32768 … 32767	-	0
47.23	Data storage 3 int16	-32768 … 32767	-	0
47.24	Data storage 4 int16	-32768 … 32767	-	0
49 Panel port communication				
49.01	Node ID number	1…32	-	1
49.03	Baud rate	1...5	-	115.2 kbps[4]
	38.4 kbps[1] / 57.6 kbps[2] / 86.4 kbps[3] / 115.2 kbps[4] / 230.4 kbps[5]			
49.04	Communication loss time	0.3 … 3000.0	s	10.0
49.05	Communication loss action	0...3	-	Fault[1]
	No action[0] / Fault[1] / Last speed[2] / Speed ref safe[3]			
49.06	Refresh settings	Done[0], Configure[1]	-	Done[0]

EN

EN

Index	Name	Range/List	Unit	Default
49.19	Basic panel home view 1	0, 1, 3...8, 10, 11, 14, 16, 20, 21, 26...28, 30...32, 37	-	Auto[0]

Auto[0]	DC voltage[7]	Temp sensor 1 excitation[20]	Abs output power[31]
Motor speed used[1]	Output power[8]	Temp sensor 2 excitation[21]	Abs motor shaft power[32]
Output frequency[3]	Speed ref ramp in[10]	Abs motor speed used[26]	AO1 data storage[37]
Motor current[4]	Speed ref ramp out[11]	Abs motor speed%[27]	AO2 data storage[38]
Motor current% of motor nominal[5]	Freq ref used[14]	Abs output frequency[28]	
Motor torque[6]	Process PID out[16]	Abs motor torque[30]	

49.20	Basic panel home view 2	See parameter 49.19 Basic panel home view 1	-	Auto[0]
49.21	Basic panel home view 3	See parameter 49.19 Basic panel home view 1	-	Auto[0]
49.219	Basic panel home view 4	See parameter 49.19 Basic panel home view 1	-	Auto[0]
49.220	Basic panel home view 5	See parameter 49.19 Basic panel home view 1	-	Auto[0]
49.221	Basic panel home view 6	See parameter 49.19 Basic panel home view 1	-	Auto[0]
50 Fieldbus adapter (FBA)				
50.01	FBA A enable	Disable[0], Enable[1]	-	Disable[0]
50.02	FBA A comm loss func	0...5	-	No action[0]

No action[0]	Fault[1]	Last speed[2]	Speed ref safe[3]	Fault always[4]	Warning[5]

50.03	FBA A comm loss t out	0.3 … 6553.5	s	0.3

Index	Name	Range/List	Unit	Default
50.04	FBA A ref1 type	0...5	-	Speed or frequency[0]
	Speed or frequency[0] / General[2] / Speed[4] / Frequency[5] / Transparent[1] / Torque[3]			
50.05	FBA A ref2 type	See parameter 50.04 FBA A ref1 type	-	Speed or frequency[0]
50.06	FBA A SW sel	Auto[0], Transparent mode[1]	-	Auto[0]
50.07	FBA A actual 1 type	See parameter 50.04 FBA A ref1 type	-	Speed or frequency[0]
50.08	FBA A actual 2 type	See parameter 50.04 FBA A ref1 type	-	Speed or frequency[0]
50.09	FBA A SW transparent source	-	-	Not selected
50.10	FBA A act1 transparent source	-	-	Not selected
50.11	FBA A act2 transparent source	-	-	Not selected
50.12	FBA A debug mode	Disable[0], Fast[1]	-	Disable
50.13	FBA A control word	0.0.0.0.0...FF.FF.FF.FF	-	0.0.0.0
50.14	FBA A reference 1	-2147483648 … 2147483647	-	0
50.15	FBA A reference 2	-2147483648 … 2147483647	-	0
50.16	FBA A status word	0.0.0.0.0...FF.FF.FF.FF	-	0.0.0.0
50.17	FBA A actual value 1	-2147483648 … 2147483647	-	0
50.18	FBA A actual value 2	-2147483648 … 2147483647	-	0
51 FBA A settings				
51.01	FBA A type	0, 1, 32, 37, 101, 128, 132, 135, 136, 485, 47808	-	None[0]

EN

EN

Index	Name	Range/List	Unit	Default
	None[0] / DeviceNet[37] / PROFInet IO[132] / RS-485 comm[485] PROFIBUS-DP[1] / ControlNet[101] / EtherCAT[135] / BACnet[47808] CANopen[32] / Ethernet[128] / ETH Pwrlink[136]			
51.02	FBA A Par2	0…65535	-	0
…	…	…	…	…
51.26	FBA A Par26	0…65535	-	0
51.27	FBA A par refresh	Done[0], Configure[1]	-	Done[0]
51.28	FBA A par table ver	0x0000…0xffff	-	0x0000
51.29	FBA A drive type code	0…65535	-	0
51.30	FBA A mapping file ver	0…65535	-	0
51.31	D2FBA A comm status	0…6	-	Not configured [0]
	Not configured[0] / Time out[2] / Off-line[4] / Reset[6] Initializing[1] / Configuration error[3] / On-line[5]			
51.32	FBA A comm SW ver	0x0000…0xffff	-	0x0000
51.33	FBA A appl SW ver	0x0000…0xffff	-	0x0000
52 FBA A data in				
52.01	FBA A data in1	0…6, 11…16, 24	-	None
	None[0] / Ref2 16bit[3] / Act2 16bit[6] / Ref2 32bit[13] / Act2 32bit[16] CW 16bit[1] / SW 16bit[4] / CW 32bit[11] / SW 32bit[14] / SW2 16bit[24] Ref1 16bit[2] / Act1 16bit[5] / Ref1 32bit[12] / Act1 32bit[15] / Other…			
…	…	…	…	…
52.12	FBA A data in12	See parameter 52.01 FBA A data in1	-	None
53 FBA A data out				
53.01	FBA A data out1	0…3, 11…13, 21	-	None[0]

Index	Name	Range/List	Unit	Default

None[0]	Ref1 16bit[2]	CW 32bit[11]	Ref2 32bit[13]	Other...
CW 16bit[1]	Ref2 16bit[3]	Ref1 32bit[12]	CW2 16bit[21]	

...	...	...	...	...
53.12	FBA A data out12	See parameter 53.01 FBA A data out1	-	None
58 Embedded fieldbus				
58.01	Protocol	None[0], Modbus RTU[1]	-	None[0]
58.02	Protocol ID	0000h...FFFFh	-	0
58.03	Node address	0...255	-	0
58.04	Baud rate	0...7	-	19.2 kbps[3]

Autodetect[0]	9.6 kbps[2]	38.4 kbps[4]	76.8 kbps[4]
4.8 kbps[1]	19.2 kbps[3]	57.6 kbps[5]	115.2 kbps[5]

58.05	Parity	0...3	-	8 EVEN 1[2]

8 NONE 1[0]	8 NONE 2[1]	8 EVEN 1[2]	8 ODD 1[3]

58.06	Communication control	Enabled[0], Refresh settings[1], Silent mode[2]	-	Enabled[0]
58.07	Communication diagnostics	0000h...FFFFh	-	0000000000000000b

Bit	Name	Bit	Name	Bit	Name	Bit	Name
0	Init failed	4	Wiring error	8	No packets	13	Protocol 1
1	Addr config err	5	Parity error	9	Noise or addressing error	14	Protocol 2
2	Silent mode	6	Baud rate error	11	CW/Ref loss	15	Internal error
3	Auto-bauding	7	No bus activity	12	Not active		

EN

EN

Index	Name	Range/List	Unit	Default
58.08	Received packets	0…4294967295	-	0
58.09	Transmitted packets	0…4294967295	-	0
58.10	All packets	0…4294967295	-	0
58.11	UART errors	0…4294967295	-	0
58.12	CRC errors	0…4294967295	-	0
58.14	Communication loss action	0…5	-	Fault[1]
	No action[0] / Fault[1] / Last speed[2] / Speed ref safe[3] / Fault always[4] / Warning[5]			
58.15	Communication loss mode	Any message[1], Cw / Ref1 / Ref2[2]	-	Cw / Ref1 / Ref2[2]
58.16	Communication loss time	0.0…6000.0	s	60
58.17	Transmit delay	0…65535	ms	3.0
58.18	EFB control word	0000h…FFFFh	-	
58.19	EFB status word	0000h…FFFFh	-	
58.25	Control profile	ABB Drives[0], DCU Profile[5]	-	ABB Drives[0]
58.26	EFB ref1 type	0…5	-	Speed or frequency[0]
	Speed or frequency[0] / Transparent[1] / General[2] / Torque[3] / Speed[4] / Frequency[5]			
58.27	EFB ref2 type	See parameter 58.26	-	Torque[3]
58.28	EFB act1 type	See parameter 58.26	-	Speed or frequency[0]
58.29	EFB act2 type	See parameter 58.26	-	Speed or frequency[0]
58.31	EFB act1 transparent source	-	-	
58.32	EFB act2 transparent source	-	-	
58.33	Addressing mode	Mode 0[0], Mode 1[1], Mode 2[2]	-	Mode 0[0]
58.34	Word order	HI-LO[0], LO-HI[1]	-	LO-HI[1]

Index	Name	Range/List	Unit	Default
58.101	Data I/O 1	0...6, 11...16, 21, 24, 31, 32, 33, 40, 41, Other...	-	CW 16bit[1]

None[0]	SW 16bit[4]	Ref1 32bit[12]	Act2 32bit[16]	AO1 data storage[32]
CW 16bit[1]	Act1 16bit[5]	Ref2 32bit[13]	CW2 16bit[21]	AO2 data storage[34]
Ref1 16bit[2]	Act2 16bit[6]	SW 32bit[14]	SW2 16bit[24]	Feedback data storage[40]
Ref2 16bit[3]	CW 32bit[11]	Act1 32bit[15]	RO/DIO control word[31]	Setpoint data storage[41]

58.102	Data I/O 2	See parameter 58.101	-	Ref1 16bit[2]
58.103	Data I/O 3	See parameter 58.101	-	Ref2 16bit[3]
58.104	Data I/O 4	See parameter 58.101	-	SW 16bit[4]
58.105	Data I/O 5	See parameter 58.101	-	Act1 16bit[5]
58.106	Data I/O 6	See parameter 58.101	-	Act2 16bit[6]
58.107	Data I/O 7	See parameter 58.101	-	None[0]
...				
58.114	Data I/O 14	See parameter 58.101	-	None[0]
70 Override				
70.01	Override status	0b0000…0b1111	-	0b0000

Bit	Name	Bit	Name	Bit	Name
0	Override enabled	3	Override direction is reverse	12	Test mode active
1	Override active	4	Override stop mode is active	13...15	Reserved
2	Override direction is forward	5...11	Reserved		

70.02	Override enable	Off[0], On[1]	-	Off[0]
70.03	Override activation source	0...13	-	Not Used[0]

EN

EN

Index	Name	Range/List	Unit	Default

Not used[0]	DI2[3]	DI5[6]	-DI2[9]	-DI5[12]
Used[1]	DI3[4]	DI6[7]	-DI3[10]	-DI6[13]
DI1[2]	DI4[5]	-DI1[8]	-DI4[11]	Other...

70.04	Override reference source	0...6	-	Override freq[3]

Constant speed/freq[0]	AI2[2]	Motor potentiometer[4]	Process PID set 1[6]
AI1[1]	Override speed/freq[3]	Stop[5]	

70.05	Override direction	0...13	-	Forward[0]

Forward[0]	DI2[3]	DI5[6]	-DI2[9]	-DI5[12]
Reverse[1]	DI3[4]	DI6[7]	-DI3[10]	-DI6[13]
DI1[2]	DI4[5]	-DI1[8]	-DI4[11]	Other...

70.06	Override frequency	-500.0...500.0	Hz	0.0
70.07	Override speed	-30000.0...30000.0	rpm	0.0
70.20	Override fault handling	Fault on high priority[0], Autoreset[1]	-	Fault on high priority[0]
70.21	Override auto reset trials	0...5	-	5
70.22	Override auto reset time	5.0...120.0 s	s	5.0 s
71 External PID 1				
71.01	External PID act value	-200000.00…200000.00	%	0.00
71.02	Feedback act value	-200000.00…200000.00	%	0.00
71.03	Setpoint act value	-200000.00…200000.00	%	0.00
71.04	Deviation act value	-200000.00…200000.00	%	0.00
71.06	PID status word	0000h…FFFFh	-	-

Index	Name	Range/List	Unit	Default

Bit	Name	Bit	Name	Bit	Name
0	PID active	3...6	Reserved	9	Reserved
1	Reserved	7	Output limit high	10...11	Deadband active
2	Output frozen	8	Output limit low	12	Internal set-point active
				13...15	Reserved

Index	Name	Range/List	Unit	Default
71.07	PID operation mode	See parameter 40.07 Process PID operation mode.	-	Off[0]
71.08	Feedback 1 source	See parameter 40.08 Set 1 feedback 1 source.	-	Not selected[0]
71.11	Feedback filter time	0.000...30.000	s	0.000
71.14	Setpoint scaling	-200000.00…200000.00	-	1500.00
71.15	Output scaling	-200000.00…200000.00	-	1500.00
71.16	Setpoint 1 source	See parameter 40.16 Set 1 setpoint 1 source.	-	Not selected[0]
71.19	Internal setpoint sel1	See parameter 40.19 Set 1 internal setpoint sel1.	-	Not selected[0]
71.20	Internal setpoint sel2	See parameter 40.20 Set 1 internal setpoint sel2.	-	Not selected[0]
71.21	Internal setpoint 1	-200000.00…200000.00	%	0.00
71.22	Internal setpoint 2	-200000.00…200000.00	%	0.00
71.23	Internal setpoint 3	-200000.00…200000.00	%	0.00
71.26	Setpoint min	-200000.00... 200000.00	%	0.00
71.27	Setpoint max	-200000.00... 200000.00	%	200000.00
71.31	Deviation inversion	See parameter 40.31 Set 1 deviation inver-sion.	-	Not inverted (Ref - Fbk)[0]
71.32	Gain	0.01...100.00	-	1.00

EN

Index	Name	Range/List	Unit	Default
71.33	Integration time	0.0...999.0	s	60.0
71.34	Derivation time	0.000...10.000	s	0.000
71.35	Derivation filter time	0.0...10.0	s	0.0
71.36	Output min	-200000.00... 200000.00	%	-200000.00
71.37	Output max	-200000.00... 200000.00	%	200000.00
71.38	Output freeze enable	See parameter 40.38 Set 1 output freeze.	-	Not selected[0]
71.39	Deadband range	0.0…200000.0	%	0.0
71.40	Deadband delay	0.0…3600.0	s	0.0
71.58	Increase prevention	No[0], Limiting[1], Process PID min lim[2], Process PID max lim[3], Other...	-	No[0]
71.59	Decrease prevention	No[0], Limiting[1], Process PID min lim[2], Process PID max lim[3], Other...	-	No[0]
71.62	Internal setpoint actual	-200000.00… 200000.00	%	0.00
71.79	External PID units	0...31	Depends on selection	%[1]

User text[0]	inH2O[7]	l/min[14]	ft3/m[21]	gal/m[28]
%[1]	°C[8]	l/h[15]	ft3/h[22]	in wg[29]
bar[2]	°F[9]	m3/s[16]	ppm[23]	MPa[30]
kPa[3]	mbar[10]	m3/m[17]	inHg[24]	ftWC[31]
Pa[4]	m3/h[11]	km3/h[18]	kCFM[25]	
psi[5]	dm3/h[12]	gal/s[19]	inWC[26]	
CFM[6]	l/s[13]	ft3/s[20]	GPM[27]	

76 PFC configuration				
76.01	PFC status	0b0000…0b1111	-	0b0000

Index	Name	Range/List	Unit	Default

Bit	Name	Bit	Name	Bit	Name
0	PFC 1 running	2	PFC 3 running	4...15	Reserved
1	PFC 2 running	3	PFC 4 running		

76.02	PFC system status	0...9, 100...103, 200...202, 300...302, 400, 500, 600, 700, 800, 801,	-	PFC disabled[0]

PFC disabled[0]	PFC inactive (invalid operation mode)[6]	Running with VSD + 2 Aux[102]	Stopping Aux2[301]	PID sleep[800]
PFC enabled (not started)[1]	Drive motor interlocked[7]	Running with VSD + 3 Aux[103]	Stopping Aux3[302]	PID sleep boost[801]
SPFC enabled (not started)[2]	All motors interlocked[8]	Starting Aux1[200]	Autochange active[400]	
MPFC enabled[3]	PFC inactive (ext1 active)[9]	Starting Aux2[201]	No auxiliary motors available to be started[500]	
Invalid configuration[4]	Running with VSD[100]	Starting Aux3[202]	Regulator bypass active[600]	
PFC inactive (local control)[5]	Running with VSD + 1 Aux[101]	Stopping Aux1[300]	MPFC connection ok[700]	

76.11	Pump/fan status 1	0b0000…0b1111	-	0b0000

Bit	Name	Bit	Name	Bit	Name
0	Ready	3	Reserved	6…10	Reserved
1	Reserved	4	Reserved	11	Interlocked
2	Running	5	In PFC control	12…15	Reserved

EN

EN

Index	Name	Range/List	Unit	Default
76.12	Pump/fan status 2	See parameter 76.11 Pump/fan status 1	-	0b0000
76.13	Pump/fan status 3	See parameter 76.11 Pump/fan status 1	-	0b0000
76.14	Pump/fan status 4	See parameter 76.11 Pump/fan status 1	-	0b0000
76.21	PFC configuration	Off[0], PFC[2], SPFC[3]	-	Off[0]
76.25	Number of motors	1…4	-	1
76.26	Min number of motors allowed	0…4	-	1
76.27	Max number of motors allowed	1…4	-	1
76.30	Start point 1	0…32767	Hz	48
76.31	Start point 2	0…32767	Hz	48
76.32	Start point 3	0…32767	Hz	48
76.41	Stop point 1	0…32767	Hz	25
76.42	Stop point 2	0…32767	Hz	25
76.43	Stop point 3	0…32767	Hz	25
76.55	Start delay	0.00…12600.00	s	10.00
76.56	Stop delay	0.00…12600.00	s	10.00
76.57	PFC speed hold on	0.00…1000.00	s	0.00
76.58	PFC speed hold off	0.00…1000.00	s	0.00
76.59	PFC contactor delay	0.20…600.00	s	0.50
76.60	PFC ramp acceleration time	0.00…1800.00	s	1.00
76.61	PFC ramp deceleration time	0.00…1800.00	s	1.00
76.70	PFC autochange	0...13	-	Not selected[0]

Not selected[0]	DI2[3]	DI5[6]	Timed function 2[9]	All stop[12]
Selected[1]	DI3[4]	DI6[7]	Timed function 3[10]	Even wear[13]
DI1[2]	DI4[5]	Timed function 1[8]	Fixed interval[11]	Other...

Index	Name	Range/List	Unit	Default
76.71	PFC autochange interval	0.00…42949672.95	h	1.00
76.72	Maximum wear imbalance	0.00…1000000.00	h	10.00
76.73	Autochange level	0.0…300.0	%	100.0
76.74	Autochange auxiliary PFC	All motors[0], Aux motors only[1]	-	Aux motors only[1]
76.81	PFC interlock 1	0...10	-	Available. PFC motor is available [1]

Interlocked. PFC motor is not in use[0]	DI2[3]	DI5[6]	Timed function 2[9]
Available. PFC motor is available[1]	DI3[4]	DI6[7]	Timed function 3[10]
DI1[2]	DI4[5]	Timed function 1[8]	Other...

76.82	PFC interlock 2	See parameter 76.25 PFC interlock 1	-	Available. PFC motor is available [1]
76.83	PFC interlock 3	See parameter 76.25 PFC interlock 1	-	Available. PFC motor is available [1]
76.84	PFC interlock 4	See parameter 76.25 PFC interlock 1	-	Available. PFC motor is available [1]
76.95	Regulator bypass control	Disable[0], Enable[1], Other...	-	Disable[0]
77 PFC maintenance and monitoring				
77.10	PFC runtime change	0...5	-	Done[0]

Done[0]	Reset PFC2 run time[3]
Set any PFC run time[1]	Reset PFC3 run time[4]
Reset PFC1 run time[2]	Reset PFC4 run time[5]

77.11	Pump/fan 1 running time	0.00…42949672.95	h	0.00
77.12	Pump/fan 2 running time	0.00…42949672.95	h	0.00
77.13	Pump/fan 3 running time	0.00…42949672.95	h	0.00

EN

EN

Index	Name	Range/List	Unit	Default
77.14	Pump/fan 4 running time	0.00…42949672.95	h	0.00
90 Feedback selection				
90.03	Load speed	-32768.00...32768.00	rpm	0.00
90.52	LoadSpeed filter time	0...10000	ms	10
90.61	Gear numerator	-2147483648...2147483648	-	1
90.62	Gear denominator	-2147483648...2147483648	-	1
90.99	Load speed unit	0, 7, 41...43, 45	-	rpm

No unit[0]	m/s[41]	ft/s[43]
rpm[7]	m/min[42]	ft/min[45]

95 HW configuration					
95.01	Supply voltage	Automatic/not selected[0], 380…415 V[2]	-	380...415 V[2]	
95.02	Adaptive voltage limits	Disable[0], Enable[1]	-	Disable[0]	
95.03	Estimated AC supply voltage	0…65535	V	0	
95.04	Control board supply	Internal 24V[0], External 24V[1]	-	Internal 24V[0]	
95.15	Special HW settings	0b0000…0b1111	-	0b0000	

Bit	Name	Bit	Name	Bit	Name
0	Reserved	1	ABB Sine filter	2...15	Reserved

95.20	HW options word 1	0b0000…0b1111	-	0b0000

Bit	Name	Bit	Name	Bit	Name
0	Supply frequency 60 Hz	13	du/dt filter activation	15	Reserved
1…12	Reserved	14	Output contactor		

95.21	HW options word 1	0b0000…0b1111	-	0b0000

Index	Name	Range/List	Unit	Default

Bit	Name	Bit	Name
0...5	Reserved	7	Cabinet fan type
6	Cabinet drive	8...15	Reserved

95.26	Motor disconnect switch	Disable[0], Enable[1]	-	Disable[0]
95.200	Cooling fan mode	Auto [0], Always on [1]	-	Always on [1]
96 System				
96.01	Language	Not selected[0], English[1033], Hindi (India)[2052]	-	Not selected[0]
96.02	Pass code	-	-	0
96.03	Access levels active	0b0000…0b1111	-	0b0000

Bit	Name	Bit	Name
0	End user	10	Override lock
1	Service	11	OEM access level 1
2	Reserved	12	OEM access level 2
3	Reserved	13	OEM access level 3
4	Reserved	14	Parameter lock
5...9	Reserved	15	Reserved

96.04	Macro select	-	-	Done[0]

Done[0]	PID[14]	SPFC[18]	Jigar[30]
ABB standard[1]	Panel PID[15]	Pharma Application[19]	
3-wire[11]	PFC[16]	Plastic Extrusion[20]	
Motor potentiometer [13]	ABB standard (vector)[17]	Torque control[28]	

96.05	Macro active	See parameter 96.04 Macro select	-	ABB standard[1]
96.06	Parameter restore	0, 2, 8, 32, 62, 512, 1024, 34560	-	Done[0]

EN

Index	Name	Range/List	Unit	Default
	Done[0] / Reset all fieldbus settings[32] / Reset end user texts[1024] Reset motor data[2] / Clear all[62] / All to factory defaults[34560] Restore defaults[8] / Reset home view[512]			
96.07	Parameter save manually	Done[0], Save[1]	-	Done[0]
96.08	Control board boot	No action[0], Reboot[1]	-	No action[0]
96.10	User set status	0...11	-	n/a[0]
	n/a[0] / Faulted[3] / User3 IO active[6] / User2 backup[9] Loading[1] / User1 IO active[4] / User4 IO active[7] / User3 backup[10] Saving[2] / User2 IO active[5] / User1 backup[8] / User4 backup[11]			
96.11	User set save/load	0...5, 18...21	-	No action[0]
	No action[0] / Load set 2[3] / Save to set 1[18] / Save to set 4[21] User set I/O mode[1] / Load set 3[4] / Save to set 2[19] Load set 1[2] / Load set 4[5] / Save to set 3[20]			
96.12	User set I/O mode in1	0...7, 18...20, 24...26	-	Not selected[0]
	Not selected[0] / DI2[3] / DI5[6] / Timed function 2[19] / Supervision 2[25] Selected[1] / DI3[4] / DI6[7] / Timed function 3[20] / Supervision 3[26] DI1[2] / DI4[5] / Timed function [18] / Supervision 1[24] / Other...			
96.13	User set I/O mode in2	See parameter 96.12 User set I/O mode in1	-	Not selected[0]
96.16	Unit selection	0b0000…0b1111	-	0b0000

EN

Index	Name	Range/List	Unit	Default

Bit	Name	Bit	Name	Bit	Name
0	Power unit	1	Reserved	2	Temperature unit
3	Reserved	4	Torque unit	5…15	Reserved

96.20	Time sync primary source	0, 3, 6, 8, 9	-	Panel link[8]

Internal[0]	Embedded FB[6]	Ethernet tool link[9]	Fieldbus A[3]	Panel link[8]

96.24	Full days since 1st Jan 1980	1…59999	-	12055
96.25	Time in minutes within 24h	1…1439	min	0 min
96.26	Time in ms within one minute	0…59999	ms	0 ms
96.51	Clear fault and event logger	Done[0], Reset[1]	-	Done [0]
96.78	550 compatibility mode	Disable[0], Enable[1]	-	Disable[0]
96.100	Change user pass code	10000000…99999999	-	-
96.101	Confirm user pass code	10000000…99999999	-	-
96.102	User lock functionality	0000h…FFFFh	-	0000h

Disable ABB access levels[0]	Reserved[3...5]	Reserved[8...10]	Disable OEM access level 3[13]
Freeze parameter lock state[1]	Protect AP[6]	Disable OEM access level 1[11]	Reserved[14...15]
Disable file download[2]	Disable panel Bluetooth[7]	Disable OEM access level 2[12]	

97 Motor control				
97.01	Switching frequency reference	2 kHz[2], 4 kHz[4], 8 kHz[8] 12 kHz[12] **Note:** 2 kHz option is not available in R0...R2 frames.	-	4 kHz[4]

EN

EN

Index	Name	Range/List	Unit	Default
97.02	Minimum switching frequency	1.5 kHz[1.5], 2 kHz[2], 4 kHz[4], 8 kHz[8], 12 kz[12] **Note:** 1.5 kHz option is available only in R0...R2 frames.	-	1.5 kHz[1]
97.03	Slip gain	0…200	%	100
97.04	Voltage reserve	-4…50	%	-2
97.05	Flux braking	Disabled[0], Moderate[1], Full[2]	-	Disabled[0]
97.08	Optimizer minimum torque	0.0...1600.0	%	0.0
97.13	IR compensation	0.00 … 50.00	%	3.50
97.20	U/F ratio	Linear[0], Squared[20]	-	Linear[0]
97.48	UDC stabilizer	-	-	Disabled[0]
	Disabled[0] / Enabled mild[100] / Enabled strong[500] Enabled min[50] / Enabled medium[300] / Enabled max[800]			
97.49	Slip gain for scalar	0...200	%	0
97.94	IR comp max frequency	1.0...200.0	%	80.0
97.135	UDC ripple	0.0...200.0	V	0.0
98 User motor parameters				
98.01	User motor model mode	Not selected[0], Motor parameters[1]	-	Not selected[0]
98.02	Rs user	0.00000…0.50000	p.u.	0.00000 p.u
98.03	Rr user	0.00000…0.50000	p.u.	0.00000 p.u
98.04	Lm user	0.00000…10.00000	p.u.	0.00000 p.u
98.05	SigmaL user	0.00000…1.00000	p.u.	0.00000 p.u
98.09	Rs user SI	0.00000…100.00000	ohm	0.00000 ohm
98.10	Rr user SI	0.00000…100.00000	ohm	0.00000 ohm
98.11	Lm user SI	0.00…100000.00	mH	0.00 mH
98.12	SigmaL user SI	0.00…100000.00	mH	0.00 mH
99 Motor data				

Index	Name	Range/List	Unit	Default
99.03	Motor type	Asynchronous motor[0]	-	Asynchronous motor[0]
99.04	Motor control mode	Vector[0], Scalar[1]	-	Scalar[1]
99.06	Motor nominal current	0.0 … 32767.0	A	1.8
99.07	Motor nominal voltage	0.0 … 32767.0	V	400.0
99.08	Motor nominal frequency	0.00 … 500.00	Hz	50.00
99.09	Motor nominal speed	0 … 30000	rpm	1430
99.10	Motor nominal power	0.00...10000.00	kW or hp	0.75
99.11	Motor nominal cos Φ	0.00 … 1.00	-	0.00
99.12	Motor nominal torque	0.000…4000000.000 N·m or 0.000…2950248.597 lb·ft	N·m	0.000
99.13	ID run requested	0...3, 7 **Note:** Adaptive ID run is applicable for R0...R5 frames and Advanced ID run is applicable for R6...R8 frames.	-	None[0]
		None[0] / Reduced[2] / Autophasing[4] / Adaptive[7] Normal[1] / Standstill[3] / Advanced[6]		
99.14	Last ID run performed	See parameter 99.13 ID run requested	-	None[0]
99.15	Motor polepairs calculated	0…1000	-	0
99.16	Motor phase order	U V W[0], U W V[1]	-	U V W[0]

EN

EN

Technical data

Contents of this chapter

The chapter contains the technical specifications of the drive, for example ratings, sizes and technical requirements as well as provisions for fulfilling the requirements for CE, UL and other approval marks.

Ratings

IEC ratings

EN

Drive Type ACS560	Nominal In	Max. current	Output ratings									Frame size
			Nominal use			Light overload use			Heavy-duty use			
	I_{1N}	I_{max}	I_N	P_N		I_{Ld} (Continuous)	P_{Ld}		I_{Hd} (Continuous)	P_{Hd}		
	A	A	A	kW	Hp	A	kW	Hp	A	kW	Hp	
3 phases U_N = 400 V (380...415 V)												
02A6-4	2.6	3.2	2.6	0.75	1	2.5	0.75	1	1.8	0.55	0.75	R0
03A3-4	3.3	4.7	3.3	1.1	1.5	3.1	1.1	1.5	2.6	0.75	1	R0
04A0-4	4	5.9	4	1.5	2	3.8	1.5	2	3.3	1.1	1.5	R0
05A6-4	5.6	7.2	5.6	2.2	3	5.3	3	3	4	1.5	2	R0
07A2-4	7.2	10.1	7.2	3	4	6.8	2.2	4	5.6	2.2	3	R0
09A4-4	9.4	13	9.4	4	5	8.9	4	5	7.2	3	4	R0
12A6-4	12.6	16.9	12.6	5.5	7.5	12	5.5	7.5	9.4	4	5	R1
017A-4	17	22.7	17	7.5	10	16.2	7.5	10	12.6	5.5	7.5	R2
025A-4	25	30.6	25	11	15	23.8	11	15	17	7.5	10	R2
033A-4	33	44.3	33	15	20	30.4	15	20	24.6	11	15	R3
039A-4	39	56.9	39	18.5	25	36.1	18.5	25	31.6	15	20	R3
046A-4	46	67.9	46	22	30	42.8	22	30	37.7	18.5	25	R3
062A-4	62	76	62	30	40	58	30	40	44.6	22	30	R4
073A-4	73	104	73	37	50	68.4	37	50	61	30	40	R4
088A-4	88	122	88	45	60	82.7	45	60	72	37	50	R5
106A-4	106	148	106	55	75	99.8	55	75	87	45	60	R5
145A-4	145	178	145	75	100	138	75	100	105	55	75	R6
169A-4	169	247	169	90	120	161	90	120	145	75	100	R7
206A-4	206	287	206	110	150	196	110	150	169	90	120	R7

Drive Type ACS560	Nominal In	Max. current	Output ratings									Frame size
			Nominal use			Light overload use			Heavy-duty use			
	I_{1N}	I_{max}	I_N	P_N		I_{Ld} (Continuous)	P_{Ld}		I_{Hd} (Continuous)	P_{Hd}		
	A	A	A	kW	Hp	A	kW	Hp	A	kW	Hp	
246A-4	246	350	246	132	180	234	132	180	206	110	150	R8
293A-4	293	418	293	160	215	278	160	215	246 1)	132	180	R8

1) Continuous current when its used in heavy duty applications, allows 130% of IHd for 1 minute every 10 minutes at 40 °C.

EN

Fuses (IEC)

uR and aR fuse

Drive type ACS560	Minimum short circuit current 1)	Input current	uR and aR				
			Rated current I_N	I^2t	Rated voltage	Bussmann designation type	IEC 60269 size
	A	A	A	A^2s	V		
3 phases U_N = 400 V (380...480 V)							
02A6-4	48	4.2	25	125	690	170M2694	00
03A3-4	48	5.3	25	125	690	170M2694	00
04A0-4	80	6.4	32	275	690	170M2695	00
05A6-4	80	9.0	32	275	690	170M2695	00
07A2-4	128	11.5	40	490	690	170M2696	00
09A4-4	128	15.0	40	1000	690	170M2696	00
12A6-4	200	20.2	50	1800	690	170M2697	00
017A-4	256	27.2	63	3600	690	170M2698	00
025A-4	400	40.0	80	1450	690	170M2699	00
033A-4	170	32.0	63	1450	690	170M1565	000
039A-4	170	38.0	63	2550	690	170M1565	000
046A-4	280	45.0	80	4650	690	170M1566	000
062A-4	380	62.0	100	8500	690	170M1567	1
073A-4	480	73.0	125	16000	690	170M1568	000
088A-4	480	88.0	160	15000	690	170M1569	1
106A-4	700	106.0	200	28500	690	170M3815	1
145A-4	1000	145.0	250	46500	690	170M3816	1
169A-4	1280	169.0	315	68500	690	170M3817	1
206A-4	1520	206.0	350	105000	690	170M3818	1

Drive type ACS560	Minimum short circuit current [1]	Input current	uR and aR				
			Rated current I_N	I^2t	Rated voltage	Bussmann designation type	IEC 60269 size
	A	A	A	A^2s	V		
246A-4	2050	246.0	450	145000	690	170M5809	2
293A-4	2200	293.0	500	275000	690	170M5810	2

[1] minimum short-circuit current of the device

gG fuses

Drive type ACS560	Minimum short circuit current [1]	Input current	gG (IEC 60269)				
			Rated current I_N	I^2t	Rated voltage	ABB designation type	IEC 60269 size
	A	A	A	A^2s	V		
3 phases U_N = 400 V (380...480 V)							
02A6-4	48	4.2	6	110	500	OFAF000H6	000
03A3-4	48	5.3	6	110	500	OFAF000H6	000
04A0-4	80	6.4	10	360	500	OFAF000H10	000
05A6-4	80	9.0	10	360	500	OFAF000H10	000
07A2-4	128	11.5	16	740	500	OFAF000H16	000
09A4-4	128	15.0	16	740	500	OFAF000H16	000
12A6-4	200	20.2	25	2500	500	OFAF000H25	000
017A-4	256	27.2	32	4500	500	OFAF000H32	000
025A-4	320	40.0	50	15500	500	OFAF000H50	000
033A-4	320	33.0	40	7700	500	OFAF000H40	000
039A-4	400	39.0	50	16000	500	OFAF000H50	000
046A-4	500	45.0	63	20100	500	OFAF000H63	000
062A-4	800	62.0	80	37500	500	OFAF000H80	000
073A-4	1000	73.0	100	65000	500	OFAF000H100	000
088A-4	1000	88.0	100	65000	500	OFAF000H100	000
106A-4	1300	106.0	125	103000	500	OFAF000H125	00
145A-4	1700	145.0	160	185000	500	OFAF000H160	00
169A-4	3300	169.0	250	600000	500	OFAF000H250	0
206A-4	5500	206.0	315	710000	500	OFAF000H315	1
246A-4	6400	246.0	355	920000	500	OFAF000H355	1
293A-4	7800	293.0	425	1300000	500	OFAF000H425	2

[1] minimum short-circuit current of the device

gR fuses

Drive type ACS560-	Minimum short circuit current [1]	Input current	gG (IEC 60269)				
			Rated current I_N	I^2t	Rated voltage	ABB designation type	IEC 60269 size
	A	A	A	A^2s	V		
3-phase UN = 380...480 V							
02A6-4	48	4.2	25	125	690	170M2694	00
03A3-4	48	5.3	25	125	690	170M2694	00
04A0-4	80	6.4	32	275	690	170M2695	00
05A6-4	80	9.0	32	275	690	170M2695	00
07A2-4	128	11.5	40	490	690	170M2696	00
09A4-4	128	15.0	40	490	690	170M2696	00
12A6-4	200	20.2	50	1000	690	170M2697	00
017A-4	256	27.2	63	1800	690	170M2698	00
025A-4	400	40.0	80	3600	690	170M2699	00
033A-4	170	32.0	63	1450	690	170M1565	000
039A-4	170	38.0	63	1450	690	170M1565	000
046A-4	280	45.0	80	2550	690	170M1566	000
062A-4	380	62	100	4650	690	170M1567	000
073A-4	480	73	125	8500	690	170M1568	000
088A-4	480	88	160	16000	690	170M1569	000
106A-4	700	106	200	15000	690	170M3815	1
145A-4	1000	145	250	28500	690	170M3816	1
169A-4	1280	169	315	46500	690	170M3817	1
206A-4	1520	206	350	68500	690	170M3818	1
246A-4	2050	246	450	105000	690	170M5809	2
293A-4	2200	293	500	145000	690	170M5810	2

[1] minimum short-circuit current of the device

EN

Typical power cable sizes

Drive type ACS560	Framesize	IEC [1]		US	
		Cu cable type	Al cable type [2]	Cu cable type	Al cable type [3]
		mm^2	mm^2	AWG/kcmil	AWG/kcmil
3-phase U_N = 400 V (380…480 V)					
02A6-4	R0	3 × 1.5 + 1.5	-	16	-
03A3-4	R0	3 × 1.5 + 1.5	-	16	-
04A0-4	R0	3 × 1.5 + 1.5	-	16	-
05A6-4	R0	3 × 1.5 + 1.5	-	16	-
07A2-4	R0	3 × 1.5 + 1.5	-	16	-
09A4-4	R0	3 × 2.5 + 2.5	-	14	-
12A6-4	R1	3 × 2.5 + 2.55	-	14	-
017A-4	R2	3 × 2.5 + 2.5	-	14	-
025A-4	R2	3 × 6 + 6	-	10	-
033A-4	R3	3 × 10 + 10	-	8	-
039A-4	R3	3 × 10 + 10	-	8	-
046A-4	R3	3 × 16 + 16	-	6	-
062A-4	R4	3 × 25 + 16	3 × 35	4	-
073A-4	R4	3 × 35 + 16	3 × 50	2	-
088A-4	R5	3 × 35 + 16	3 × 70	2	-
106A-4	R5	3 × 50 + 25	3 × 70	1/0	-
145A-4	R6	3 × 95 + 50	3 × 120	3/0	-
169A-4	R7	3 × 120 + 70	3 × 150	250 MCM	-
206A-4	R7	3 × 150 + 70	3 × 240	300 MCM	-
246A-4	R8	2 × (3 × 70 + 35)	2 × (3 × 95)	2 × 2/0	-
293A-4	R8	2 × (3 × 95 + 50)	2 × (3 × 120)	2 × 3/0	-

1) The cable sizing is based on maximum parallel layout of 6 cables laid on a cable ladder side by side, ambient temperature 30 °C, PVC insulation, surface temperature 70 °C (EN 60204-1 and IEC 60364-5-52/2001). For other conditions, size the cables according to local safety regulations, appropriate input voltage and the load current of the drive.

2) Aluminum cables must not be used with frames R0…R4.

3) In the USA, aluminum cables must not be used.

EN

Dimensions, weights and free space requirements

Frame	Dimensions and weight				
	IP20				
	W	D	H1	H2	Weight
	mm	mm	mm	mm	kg
R0	73	207	223	x	1.6
R1	97	207	223	x	1.9
R2	172	207	220	x	2.9
R3	203	229	490	x	14.9
R4	203	257	636	x	19
R5	203	296	719	600	28.3
R6	252	369	722	548	42.4
R7	284	371	839	600	54
R8	300	394	943	680	69

EN

Standard frames

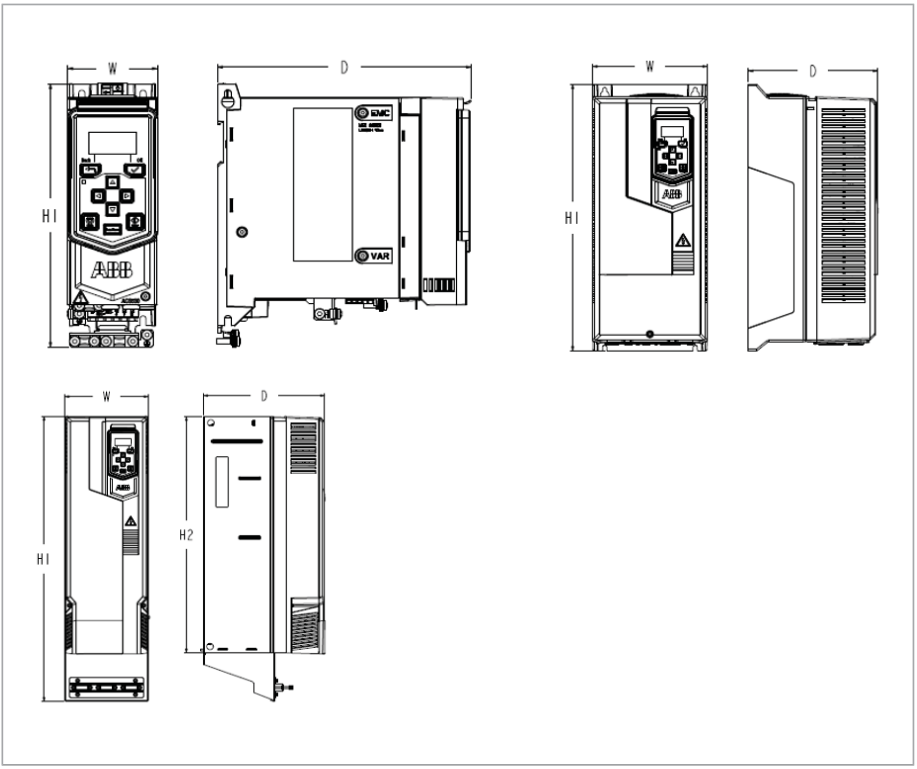

Symbols	
IP20	
H1	Height of front side
H2	Height of back side (without cable connecting box)
W	Width
D	Depth

See the detailed dimension drawings in the drive hardware manual

Energy efficiency data (ecodesign)

Energy efficiency data according to IEC-61800-9-2 is available from the ecodesign tool (https://ecodesign.drivesmotors.abb.com).

Applicable standards

EN

The drive complies with the following standards. The compliance with the European Low Voltage Directive is verified according to standard EN 61800-5-1.

EN 60204-1:2006 + AC:2010	*Safety of machinery. Electrical equipment of machines. Part 1: General requirements. Provisions for compliance:* The final assembler of the machine is responsible for installing - emergency-stop device - supply disconnecting device.
IEC/EN 60529:1992 + A2: 2013	*Degrees of protection provided by enclosures (IP code)*
EN 61000-3-12:2011	*Electromagnetic compatibility (EMC) - Part 3-12: Limits - Limits for harmonic currents produced by equipment connected to public low-voltage systems with input current*
IEC/EN 61800-3:2004 + A1:2012	*Adjustable speed electrical power drive systems. Part 3: EMC requirements and specific test methods*
IEC/EN 61800-5-1:2007	*Adjustable speed electrical power drive systems. Part 5-1: Safety requirements – electrical, thermal and energy*
IEC 61800-9-2:2017	Adjustable speed electrical power drive systems – Part 9-2: Ecodesign for power drive systems, motor starters, power electronics and their driven applications – Energy efficiency indicators for power drive systems and motor starters
IEC 60664-1:2007	*Insulation coordination for equipment within low-voltage systems. Part 1: Principles, requirements and tests.*

CE marking

A CE mark is attached to the drive to verify that the drive follows the provisions of the European Low Voltage, EMC RoHirectives.The CE marking also verifies that the drive, in regard to its safety functions (such as Safe torque off), conforms with the Machinery Directive as a safety component.

Compliance with the European Low Voltage Directive

Power and productivity
for a better world™

EU Declaration of Conformity

We

Manufacturer: ABB India Limited.
Address: Plot No 5 & 6,2nd Phase,
Peenya Industrial Area
Bangalore, 560058, India.
Phone: +91 80 22949359

declare under our sole responsibility that the following product:

Frequency converter

ACS560-01(frame sizes R0-R8)

is in conformity with the relevant requirements of European Union Directives, which have been notified in this single declaration that consists of individual Declarations of conformity, provided that the equipment is selected, installed and used according to given instructions.

The harmonised standards and other standards, which have been applied, are specified on the individual Declarations of conformity for particular EU directive.

EU Directives		
Low Voltage Directive	2014/35/EU	LVD
EMC Directive	2014/30/EU	EMC
Machinery Directive	2006/42/EC	MD
RoHS Directive	2011/65/EU	ROHS

Individual EU Declaration of Conformity:

Product	LVD	EMC	MD	ROHS
ACS560-01	3AXD10000549782		3AXD10000549855	3AXD10000550609

Bangalore, 04 Oct 2016

Manufacturer representative: Madhusudhan A R

Vice President

ABB India Limited.

3AXD10000549832

1 (1)

EN

The compliance with the European Low Voltage Directive has been verified according to standard EN 61800-5-1:2007. The declaration of conformity (3AXD10000549832) is available on the Internet. See section *Document library on the Internet* on the inside of the back cover.

Compliance with the European EMC Directive

The EMC Directive defines the requirements for immunity and emissions of electrical equipment used within the European Union. The EMC product standard (EN 61800- 3:2004 + A1:2012) covers requirements stated for drives.

The declaration (3AXD10000549782) is available on the Internet. See section *Document library on the Internet* on the inside of the back cover.

Compliance with the European ROHS II Directive 2011/65/EU

The RoHS II Directive defines the restriction of the use of certain hazardous substances in electrical and electronic equipment. The declaration (3AXD10000550609) is available on the Internet. See section *Document library on the Internet* on the inside of the back cover.

Compliance with the European Machinery Directive 2006/42/EC 2nd Edition – June 2010

EU Declaration of Conformity

Machinery Directive 2006/42/EC

We
Manufacturer: ABB India Limited
Address: Plot No 5 &6 , 2nd Phase , Peenya Industrial Area ,Bangalore,560058, India
Phone: +91 80 22949359

Declare under our sole responsibility that the following product:

Frequency converter

ACS560 (frames R0-R8)

identified with serial numbers beginning with 9

with regard to the safety function

Safe torque-off

is in conformity with all the relevant safety component requirements of the EU Machinery Directive 2006/42/EC, when the listed safety function is used for safety component functionality.

The following harmonized standards have been applied:

EN 61800-5-2:2007	Adjustable speed electrical power drive systems – Part 5-2: Safety requirements - Functional
EN 62061:2005 + AC:2010 + A1:2013 + A2:2015	Safety of machinery – Functional safety of safety-related electrical, electronic and programmable electronic control systems
EN ISO 13849-1:2015	Safety of machinery – Safety-related parts of control systems. Part 1: General principles for design
EN ISO 13849-2:2012	Safety of machinery – Safety-related parts of the control systems. Part 2: Validation
EN 60204-1:2018	Safety of machinery – Electrical equipment of machines – Part 1: General requirements

1/2

3AXD10000549832 Rev. 3
IMS template code: 3AFE011906, Rev. C

EN

EN

The following other standard has been applied:

IEC 61508:2010, parts 1-2/3	Functional safety of electrical / electronic / programmable electronic safety-related systems
IEC 61800-5-2:2016	Adjustable speed electrical power drive systems – Part 5-2: Safety requirements - Functional

The product referred in this declaration of conformity fulfils the relevant provisions of other European Union directives which are notified in a single EU declaration of conformity 3AXD10000549832.

Person authorized to compile the technical file 3AXD10000549485 :
Name and address: Jussi Vesti, Hiomotie 13, 00380 Helsinki, Finland

Bangalore, 27 May 2020

Signed for and on behalf of:

AR Madhusudhan
Vice President, MODP
ABB India Limited

Laxmikantha shenoy
Manager , Prodcut Engineering
ABB India Limited

2/2

3AXD10000549832 Rev. 3
IMS template code: 3AFE011906, Rev. C

The drive is a machinery component that can be integrated into a wide range of machinery categories as specified in European Commission's *Guide to application of the Machinery Directive 2006/42/EC 2nd Edition – June 2010*. The declaration (3AXD10000549855) is available on the Internet. See section *Document library on the Internet* on the inside of the back cover.

Diagnostics

Warning messages

Code (hex)	Warning/Aux code (aux code visible only on assistant control panel and drive composer)	Cause	What to do
64FF	Fault reset	A fault has been reset.	Event. Informative only.
A2B1	Overcurrent	Output current exceeded internal fault limit.	Check motor load, acceleration times, earth fault in motor or motor cables, contactors opening and closing, start-up data, power factor correction in capacitors or surge absorbers in motor cable.
A2B3	Earth leakage	Load unbalance typically due to earth fault in motor or motor cable.	Check for no power factor correction capacitors or surge absorbers in motor cable, and no earth fault in motor or motor cables.

EN

Code (hex)	Warning/Aux code (aux code visible only on assistant control panel and drive composer)	Cause	What to do
A2B4	Short circuit	Short-circuit in motor cable(s) or motor.	Check motor and motor cable for cabling errors. Check motor and motor cable (including phasing and delta/star connection). Check for an earth fault in motor or motor cables by measuring the insulation resistances of motor and motor cable. See chapter *Electrical installation*, section *Checking the insulation of the assembly* in the *Hardware manual* of the drive. Check there are no power factor correction capacitors or surge absorbers in motor cable. For frames R6 to R8, check the auxiliary code.
		Short circuit in the upper transistor of the U-phase.	
		Short circuit in the lower transistor of the U-phase.	
		Short circuit in the upper transistor of the V-phase.	
		Short circuit in the lower transistor of the V-phase.	
		Short circuit in the upper transistor of the WU-phase.	
		Short circuit in the lower transistor of the W-phase.	
		DC capacitor short circuit.	
		State feedback from output phases does not match control signals. For frames R6 and R7.	
A2BA	IGBT overload	Excessive IGBT junction to case temperature.	Check motor cable, ambient conditions, air flow and fan operation, heatsink fins for dust pick-up, motor power against drive power.
A3A1	DC link overvoltage	Intermediate circuit DC voltage too high.	Check Overvoltage control parameter, no static or transient overvoltage in mains voltage, brake chopper/resistor, and deceleration time. Use coast-to-stop. Retrofit drive with chopper and resistor.
A3A2	DC link undervoltage	Intermediate circuit DC voltage too low (when the drive is stopped).	Check the supply voltage setting and fuses.
A3AA	DC not charged	The voltage of the intermediate DC circuit has not rose to operating level.	Check the supply voltage and supply voltage setting.

Code (hex)	Warning/Aux code (aux code visible only on assistant control panel and drive composer)	Cause	What to do
A490	Incorrect temperature sensor setup	Sensor type mismatch	Check the temperature setting parameters.
A491	External temperature 1	Measured temperature 1 exceeded warning limit.	Check the parameter 35.02 Measured temperature 1, cooling of the motor, value of 35.13 Temperature 1 warning limit.
A492	External temperature 2	Measured temperature 2 exceeded warning limit.	Check the parameter 35.03 Measured temperature 2, cooling of the motor, value of 35.23 Temperature 2 warning limit.
A4A0	Control board temperature.	Control board temperature is excessive. 1 – Sensor fault.	Check the sensor and change the control board.
A4A1	IGBT overtemperature	Estimated drive IGBT temperature is excessive.	Check ambient condition, air flow and fan operation, heatsink fins for dust pick-up, motor power against drive power.
A4A9	Cooling	Drive module temperature is excessive.	Check ambient temperature, drive module cooling air flow and fan operation, dust pick-up in the inside of cabinet and heatsink of drive module. Clean whenever necessary.
A4B0	Excess temperature	Power unit module temperature is excessive.	Check ambient conditions, air flow and fan operation, dust pick-up in heatsink fins, motor power against drive power.
A4B1	Excess temperature difference	High temperature difference between the IGBTs of different phases.	Check motor cabling and drive module(s) cooling.
A4F6	IGBT temperature	Drive IGBT temperature is excessive.	Check ambient conditions, air flow and fan operation, dust pick-up in heatsink fins and motor power against drive power.
A580	PU communication	Communication errors between drive control unit and power unit.	Check connections between drive control unit and power unit and value of parameter 95.04 Control board supply.

EN

EN

Code (hex)	Warning/Aux code (aux code visible only on assistant control panel and drive composer)	Cause	What to do
A581	Fan	Cooling fan feedback missing.	Check the auxiliary code to identify the fan. Code 0 denotes main fan 1. Other codes (format XYZ): “X” specifies state code (1: ID run, 2: normal). “Y” = 0, “Z” specifies the index of the fan (1: Main fan 1, 2: Main fan 2, 3: Main fan 3). Check fan operation and connection. Replace fan if faulty.
A582	Auxiliary fan missing	An auxiliary cooling fan is stuck or disconnected. 0001 – Auxiliary fan 1 missing 0002 – Auxiliary fan 2 missing	Check connection(s). Replace fan if faulty.
A590	Drive HW initialization.	Drive hardware setup is initializing. 0001 - Initializing HW settings for the first time.	See auxiliary code.
A591	Drive HW initialization	Initialization of the drive hardware.	Check the auxiliary code. See actions for each code below.
	0000	Drive hardware setup is initializing.	Wait for the setup to initialize.
	0001	Initializing HW settings for the first time.	Wait for the setup to initialize.
A5A0	Safe torque off	Safe torque off function is active.	Check safety circuit connections and parameter 95.04 Control board supply.
A5EA	Measurement circuit temperature	Fault in drive internal temperature measurement.	Contact your local ABB representative.
A5EB	PU board powerfail	Power unit power supply failure.	Contact your local ABB representative.
A5ED	Measurement circuit ADC	Measurement circuit fault.	Contact your local ABB representative.
A5EE	Measurement circuit DFF	Measurement circuit fault.	Contact your local ABB representative.

Code (hex)	Warning/Aux code (aux code visible only on assistant control panel and drive composer)	Cause	What to do
A5EF	PU state feedback	State feedback from output phases not matching with control signals.	Contact your local ABB representative.
A5F0	Charging feedback	Charging feedback signal missing.	Check the feedback signal coming from the charging system.
A5F1	Redundant measurement	Duplicated measurements are beyond limits.	Contact your local ABB representative.
A5F2	Overtemperature hw	Excessive hardware temperature.	Contact your local ABB representative.
A682	Flash erase speed	Flash erase speed exceeded.	Avoid forcing unnecessary parameter saves by parameter 96.07 Parameter save manually or cyclic parameter writes (such as user logger triggering through parameters).Check the auxiliary code (format XYYY YZZZ). “X” specifies the source of warning (1: generic flash erase supervision). “ZZZ” specifies the flash subsector number that generated the warning.
A684	Power fail saving	Power fail saving warning.	Contact your local ABB representative.
A6A4	Motor nominal value	The motor parameters are set incorrectly. The drive is not dimensioned correctly.	Check the settings of motor configuration in parameter groups 98 and 99 and check if drive is sized correctly for the motor.
	1 – Slip frequency is too small		5 – Nominal voltage is outside limits
	2 – Synchronous and nominal speeds differ too much		6 – Nominal power is higher than apparent power.
	3 – Nominal speed is higher than synchronous speed with 1 pole pair		7 – Nominal power not consistent with nominal speed and torque
	4 – Nominal current is outside limits		
A6A5	No motor data	Parameters in group 99 are not set.	Set the required parameters in group 99.

EN

Code (hex)	Warning/Aux code (aux code visible only on assistant control panel and drive composer)	Cause	What to do
A6A6	Voltage category unselected	Voltage category is not defined.	Set voltage category in parameter 95.01 Supply voltage.
A6A7	System time not set	System time is not set.	
A6B0	User lock is open	The user lock is open, ie. user lock configuration parameters 96.100...96.102 are visible.	Close the user lock by entering an invalid pass code in parameter 96.02 Pass code.
A6B1	User pass code not confirmed	New pass code is entered in parameter 96.100 and not confirmed in 96.101.	Confirm the new pass code by entering the same code in 96.101.
A6D1	FBA A parameter conflict	PLC requested functionality is not activated.	Check PLC programming.
A6E5	AI parametrization	Current/voltage hardware setting of an analog input does not correspond to parameter settings.	Adjust the hardware setting on the drive control unit or the parameter 12.15/12.25.
A6E6	ULC configuration	User load curve configuration error.	Check the auxiliary code (format XXXX ZZZZ). “ZZZZ” indicates the problem (see actions for each code below).
	0000	Speed points inconsistent.	Check that each speed point (parameters 37.11…37.15) has a higher value than the previous point.
	0002	Underload point above overload point.	Check that each overload point (37.31…37.35) has a higher value than the corresponding underload point (37.21…37.25).
	0003	Overload point below underload point.	
A7A1	Mechanical brake closing failed	Mechanical brake control warning.	Check mechanical brake connection. Check mechanical brake settings in parameter group 44 Mechanical brake control. Check that acknowledgment signal matches the actual status of the brake.

Code (hex)	Warning/Aux code (aux code visible only on assistant control panel and drive composer)	Cause	What to do
A7A5	Mechanical brake opening not allowed	Open conditions of mechanical brake cannot be fulfilled.	Check mechanical brake settings in parameter group 44 Mechanical brake control. Check that the acknowledgment signal (if used) matches the actual status of the brake.
A7AC	I/O Module internal error	Calibration data is not stored in the I/O module. Analog signals are not working with full accuracy.	Replace I/O module.
AFF5	Override new start required	Override new start required	The safe torque off function was active and has been reset while in Override. A new start signal is required in order to start the drive again.
AFF8	Motor heating active	Pre-heating is being performed	Informative warning. Motor preheating is active. Current specified by parameter 21.16 Pre-heating time delay is being passed through the motor.
AFFE	Override active	Override active warning.	Informative warning. See parameter 70.02 Override enable.
A780	Motor stall (Programmable warning: 31.24 Stall function)	Motor is operating in stall region.	Check motor load, drive ratings and fault function parameters.
A783	Motor overload	Motor current is too high.	Check for overloaded motor Adjust the parameters used for the motor overload function. (35.51…35.53, 35.55, 35.56).

EN

EN

Code (hex)	Warning/Aux code (aux code visible only on assistant control panel and drive composer)	Cause	What to do
A784	Motor disconnect	All three output phases are disconnected from motor.	Check if parameter 95.26 enables the use of a motor disconnect switch. If not, check the following: • All switches between drive and motor are closed. • All cables between drive and motor are connected and secured. If no issue was detected and drive output was actually connected to motor, contact ABB.
A791	Brake resistor	Brake resistor fault.	Check brake resistor.
A792	Brake resistor wiring	Brake resistor short circuit or fault in brake chopper.	Check brake chopper and brake resistor connections.
A793	BR excess temperature	Brake resistor temperature exceeded warning limit.	Stop the drive. Let resistor cool down. Check resistor overload protection function settings, warning limits, resistor dimensioning and braking cycle limits.
	1 - Resistance value too low 2 - Thermal time constant not given 3 - maximum continuous power not given		
A794	BR data	No brake resistor data.	Check resistor data settings.
A79C	BC IGBT excess temperature	Brake chopper IGBT temperature exceeded internal warning limit.	Let chopper cool down. Check ambient temperature, cooling fan, air flow, cabinet cooling, resistor overload protection function settings, chopper resistor value, braking cycle and supply voltage.
A7AB	Built in/Extension I/O configuration failure	The I/O built in/extension module is not connected to the device properly.	Make sure that the I/O built in/extension module is connected to the device.

Code (hex)	Warning/Aux code (aux code visible only on assistant control panel and drive composer)	Cause	What to do
A7A2	Mechanical brake opening failed	Status of mechanical brake acknowledgment is not as expected during brake open.	Check mechanical brake connection. Check mechanical brake settings in parameter group 44 Mechanical brake control. Check that acknowledgment signal matches the actual status of brake.
A7C1	FBA A communication	Cyclical communication between drive and fieldbus adapter module A or between PLC and fieldbus adapter module A is lost.	Check the status of fieldbus communication and cable connections.
A7CE	EFB comm loss	Communication lost in embedded fieldbus (EFB).	Check the status of the fieldbus master and cable connections to the EIA-485/X5 terminals 29, 30 and 31 on the control unit.
A7EE	Panel loss	Communication lost between control panel or PC tools and drive.	Check PC tool or control panel connection. Disconnect and reconnect the control panel.
A88F	Cooling fan	Maintenance timer limit exceeded.	Replace the drive cooling fan. Parameter 05.04 Fan on-time counter shows the running time of the cooling fan.
A8A0	AI supervision	Analog signal is beyond limits.	Check the signal level, input wiring, and the defined limits.
	0001 – AI1 less minimum		0003 – AI2 less minimum
	0002 – AI1 greater maximum		0004 – AI2 greater maximum
A8A1	RO life warning	The relay has changed states more than the recommended number of times.	Change the control board or stop using the relay output.
	0001 – Relay output 1		0003 – Relay output 3
	0002 – Relay output 2		

EN

EN

Code (hex)	Warning/Aux code (aux code visible only on assistant control panel and drive composer)	Cause	What to do
A8A2	RO toggle warning	The relay output is changing states faster than recommended.	Replace the signal connected to the relay output source with a less frequently changing signal.
	0001 – Relay output 1 0002 – Relay output 2 0003 – Relay output 3		
A8B0	Signal supervision 1	Warning generated by the signal supervision function 1.	Check the source of the warning (parameter 32.07 Supervision 1 signal).
A8B1	Signal supervision 2	Warning generated by the signal supervision function 2.	Check the source of the warning (parameter 32.17 Supervision 2 signal).
A8B2	Signal supervision 3	Warning generated by the signal supervision function 3.	Check the source of the warning (parameter 32.27 Supervision 3 signal).
A8B3	Signal supervision 4	Warning generated by the signal supervision function 4.	Check the source of the warning (parameter 32.37 Supervision 4 signal).
A8B4	Signal supervision 5	Warning generated by the signal supervision function 5.	Check the source of the warning (parameter 32.47 Supervision 5 signal).
A8B5	Signal supervision 6	Warning generated by the signal supervision function 6.	Check the source of the warning (parameter 32.57 Supervision 6 signal).
A8B6	Current limit warning	Motor actual current exceeded the limit defined in parameter 30.17 Maximum current.	Reduce the motor load. Check for any jam or stall in motor.
A8BE	ULC overload warning	User load curve: Signal has been too long over the overload curve.	See parameter 37.03 ULC overload actions.
	0001	Overload occurred between speed point 37.11 ULC speed table point 1 and 37.12 ULC speed table point 2.	Check the load.

Code (hex)	Warning/Aux code (aux code visible only on assistant control panel and drive composer)	Cause	What to do
	0002	Overload occurred between speed point 37.12 ULC speed table point 2 and 37.13 ULC speed table point 3.	Check the load.
	0003	Overload occurred between speed point 37.13 ULC speed table point 3 and 37.14 ULC speed table point 4.	Check the load.
	0004	Overload occurred between speed point 37.14 ULC speed table point 4 and 37.15 ULC speed table point 5.	Check the load.
A8BF	ULC underload warning	User load curve: Signal has been too long under the underload curve.	See parameter 37.04 ULC underload actions.
	0001	Underload occurred between speed point 37.11 ULC speed table point 1 and 37.12 ULC speed table point 2.	Check the load.
	0002	Underload occurred between speed point 37.12 ULC speed table point 2 and 37.13 ULC speed table point 3.	Check the load.
	0003	Underload occurred between speed point 37.13 ULC speed table point 3 and 37.14 ULC speed table point 4.	Check the load.
	0004	Underload occurred between speed point 37.14 ULC speed table point 4 and 37.15 ULC speed table point 5.	Check the load.

EN

Code (hex)	Warning/Aux code (aux code visible only on assistant control panel and drive composer)	Cause	What to do
A8C0	ULC invalid speed table	User load curve: X-axis points (speed) are not valid.	See parameter 37.11 ULC speed table point 1.
A8C5	ULC invalid underload table	User load curve: Underload curve points are not valid.	See parameter 37.21 ULC underload point 1.
A8C6	ULC invalid overload table	User load curve: Overload curve points are not valid.	See parameter 37.31 ULC overload point 1.
A981	External warning 1	Fault in external device 1.	Check external device and parameter 31.01 External event 1 source.
A982	External warning 2	Fault in external device 2.	Check external device and parameter 31.03 External event 2 source.
A983	External warning 3	Fault in external device 3.	Check external device and parameter 31.05 External event 3 source.
A984	External warning 4	Fault in external device 4.	Check external device and parameter 31.07 External event 4 source.
A985	External warning 5	Fault in external device 5.	Check external device and parameter 31.09 External event 5 source.
A991	Safe motor temperature	You configured a season which starts before the previous season.	Configure the seasons with increasing start dates, See parameters 34.60 Season 1 start date…34.63 Season 4 start date.
AF88	Season configuration warning	You configured a season which starts before the previous season.	Configure the seasons with increasing start dates, See parameters 34.60 Season 1 start date…34.63 Season 4 start date.
AF90	Speed controller autotuning	The speed controller autotune routine did not complete successfully.	Check the auxiliary code (format XXXX YYYY). “YYYY” indicates the problem (see actions for each code below).
	0000	The drive was stopped before the autotune routine finished.	Repeat autotune until successful.

Code (hex)	Warning/Aux code (aux code visible only on assistant control panel and drive composer)	Cause	What to do
	0001	The drive was started but was not ready to follow the autotune command.	Make sure the prerequisites of the autotune run are fulfilled. See section Before activating the autotune routine (page 46) in firmware manual.
	0002	Required torque reference could not be reached before the drive reached maximum speed.	Decrease torque step (parameter 25.38) or increase speed step (25.39).
	0003	Motor could not accelerate/decelerate to maximum/minimum speed.	Increase torque step (parameter 25.38) or decrease speed step (25.39).
	0005	Motor could not decelerate with full autotune torque.	Decrease torque step (parameter 25.38) or speed step (25.39).
AFAA	Autoreset	A fault is about to be autoreset.	Informative warning.
AFE1	Emergency stop (off2)	Emergency stop (mode selection off2) command.	Check that it is safe to continue operation. Then return emergency stop push button to normal position. Restart drive.
AFE2	Emergency stop (off1 or off3)	Emergency stop (mode selection off1 or off3) command.	
AFE9	Start delay	Start delay is active and the drive will start the motor after a predefined delay.	Informative warning.
AFF5	Override new start required	The Safe torque off function was active and has been reset while in Override.	A new start signal is required to start the drive again.
AFEB	Run enable missing	No run enable signal is received.	Check setting of parameter 20.12 Run enable 1 source. Switch on the signal or check wiring of selected source.

EN

EN

Code (hex)	Warning/Aux code (aux code visible only on assistant control panel and drive composer)	Cause	What to do
AFEC	External power signal missing	95.04 Control board supply is set to External 24V but no voltage is connected to the control unit.	Check the external 24 V DC power supply to the control unit, or change the setting of parameter 95.04.
AFED	Enable to rotate	Signal to rotate is not received within a fixed time delay of 120 s.	Switch on the enable to rotate signal (eg. in digital inputs). Check parameter 20.22 Enable to rotate.
AFF6	Identification run	Motor ID run will occur at next start.	Informative warning.
B5F6	Identification run	Motor ID run completed successfully.	Informative warning.
B5A0	STO event)	Safety circuit signal(s) connected to connector STO is lost.	Check safety circuit connections.
D501	No more available PFC motors	No more PFC motors can be started because they can be interlocked or in the Hand mode.	Check that there are no interlocked PFC motors, see parameters: 76.81…76.84. If all motors are in use, the PFC system is not adequately dimensioned to handle the demand.
D502	All motors interlocked	All the motors in the PFC system are interlocked.	Check that there are no interlocked PFC motors, see parameters 76.81…76.84.
D503	VSD controlled PFC motor interlocked	The motor connected to the drive is interlocked (unavailable).	Motor connected to the drive is interlocked and thus cannot be started. Remove the corresponding interlock to start the drive controlled PFC motor. See parameters 76.81…76.84.
FA90	STO diagnostics failure	The software is not working properly.	Restart the control unit.

Fault messages

Code (hex)	Fault / Aux. code aux code visible only on assistant control panel and drive composer))	Cause	What to do
1080	Backup/Restore timeout	During backup/restore, communication is lost between panel/PC tool and drive.	Request backup or restore again.
1081	Rating ID fault	Drive software is not able to read the drive rating ID.	Reset the fault or cycle the power to the drive. If the fault persists, contact your local ABB representative.
2281	Calibration	Measured offset of output phase current measurement or difference between output phase U2 and W2 current measurement is too great (the values are updated during current calibration).	Try performing the current calibration again. If the fault persists, contact your local ABB representative.

EN

Code (hex)	Fault / Aux. code aux code visible only on assistant control panel and drive composer))	Cause	What to do
2310	Overcurrent	Output current has exceeded internal fault limit. In addition to an actual overcurrent situation, this fault may also be caused by an earth fault or supply phase loss.	Check the auxiliary code (format XXXYYYZZ): “ZZ” indicates the overcurrent type and phase that triggered the fault: bit 7 =1 indicates SW overcurrent bit 0: Phase U bit 1: Phase V bit 2: Phase W For example: Aux code 0x83 indicates SW overcurrent of phase U and V. If there is no aux code, this indicates that hardware overcurrent is triggered. Check motor load. Check acceleration times in parameter group 23 Speed reference ramp (speed control), 26 Torque reference chain (torque control) or 28 Frequency reference chain (frequency control). Also check parameters 46.01 Speed scaling, 46.02 Frequency scaling and 46.03 Torque scaling. Check motor and motor cable (including phasing and delta/star connection). Check there are no contactors opening and closing in motor cable. Check that the start-up data in parameter group 99 corresponds to the motor rating plate. Check that there are no power factor correction capacitors or surge absorbers in motor cable. Check for an earth fault in motor or motor cables by measuring the insulation resistances of motor and motor cable. See chapter Electrical installation, section Checking the insulation of the assembly in the Hardware manual of the drive.

Code (hex)	Fault / Aux. code aux code visible only on assistant control panel and drive composer))	Cause	What to do
2330	Earth leakage	Load unbalance typically due to earth fault in motor or motor cable.	Check there are no power factor correction capacitors or surge absorbers in motor cable and there is no earth fault in motor or motor cables.
2340	Short circuit	Short-circuit in motor cable(s) or motor.	Check motor and motor cable for cabling errors. Check there are no power factor correction capacitors or surge absorbers in motor cable. For frames R6 to R8, check the auxiliary code.
	0001	Short circuit in the upper transistor of the U-phase.	
	0002	Short circuit in the lower transistor of the U-phase.	
	0004	Short circuit in the upper transistor of the V-phase.	
	0008	Short circuit in the lower transistor of the V-phase.	
	0010	Short circuit in the upper transistor of the W-phase.	
	0020	Short circuit in the lower transistor of the W-phase.	
	0040	DC capacitor short circuit.	
	0080	State feedback from output phases does not match control signals. For frames R6 and R7.	
2381	IGBT overload	Excessive IGBT junction to case temperature.	Check motor cable.
2392	BU earth leakage	Total earth leakage of inverter modules is excessive.	Check there are no power factor correction capacitors or surge absorbers in motor cable. Measure insulation resistances of motor cables and motor. Contact your local ABB representative.

EN

EN

Code (hex)	Fault / Aux. code aux code visible only on assistant control panel and drive composer))	Cause	What to do
3130	Input phase loss	Intermediate circuit DC voltage is oscillating due to missing input power line phase or blown fuse.	Check input power line fuses and there is no input power supply imbalance.
3181	Wiring or earth fault	Incorrect input power and motor cable connection.	Check input power connections.
3210	DC link overvoltage	Excessive intermediate circuit DC voltage.	Check overvoltage control is on, supply voltage matches the nominal input voltage of the drive. Check supply line for static or transient overvoltage, brake chopper, brake resistor and deceleration time. Use coast-to-stop function (if applicable).
3220	DC link undervoltage	Intermediate circuit DC voltage is not sufficient.	Check supply cabling, fuses and switchgear.
3291	BU DC link difference	Difference in DC voltages between parallel-connected inverter modules.	Check the auxiliary code (format XXXY YYZZ). “XXX” specifies the source of the first error (see “YYY”). “YYY” specifies the module through which BCU control unit channel the fault was received (1: Channel 1, 2: Channel 2, 4: Channel 3, 8: Channel 4, …, 800: Channel 12).

Code (hex)	Fault / Aux. code aux code visible only on assistant control panel and drive composer))	Cause	What to do
3381	Output phase loss	Motor circuit fault due to missing motor connection (any of the three phases not connected). In scalar control mode, the drive detects fault only when the output frequency is above 10% of the motor nominal frequency. Connect motor cable. If the drive is in scalar mode and nominal current of the motor is less than 1/6 of the nominal output current of the drive, set parameter 31.19 Motor phase loss to No action [0].	Connect motor cable. If the drive is in scalar mode and nominal current of the motor is less than 1/6 of the nominal output current of the drive, set parameter 31.19 Motor phase loss to No action [0].
4110	Control board temperature	Control board temperature is too high.	Check proper cooling of the drive and auxiliary cooling fan.
4210	IGBT overtemperature	Estimated drive IGBT temperature is excessive.	Check ambient conditions, air flow and fan, dust pick-up in heatsink fins and motor power.
4290	Cooling	Drive module temperature is excessive.	Check ambient temperature, air flow and fan operation, dust pick-up in heatsink. Clean whenever necessary.
42F1	IGBT temperature	Drive IGBT temperature is excessive.	Check ambient conditions, air flow and fan, dust pick-up in heatsink fins and motor power.
4310	Excess temperature	Power unit module temperature is excessive.	Check ambient conditions, air flow and fan, dust pick-up in heatsink fins and motor power.
4380	Excess temperature difference	High temperature difference between the IGBTs of different phases.	Check motor cabling and drive module(s) cooling.
4981	External temperature 1	Measured temperature 1 has exceeded fault limit.	Check parameter 35.02 Measured temperature 1, motor cooling and fault limit for measured temperature 1.

EN

EN

Code (hex)	Fault / Aux. code aux code visible only on assistant control panel and drive composer))	Cause	What to do
4982	External temperature 2	Measured temperature 2 has exceeded fault limit.	Check parameter 35.03 Measured temperature 2, motor cooling and fault limit for measured temperature 1.
4991	Safe motor temperature	The CPTC-02 module indicates overtemperature: • motor temperature is too high, or • the thermistor is in shortcircuit.	Check the cooling of the motor. Check the motor load and drive ratings. Check the wiring of the temperature sensor. Repair wiring if faulty. Measure the resistance of the sensor. Replace the sensor if faulty.
5080	Fan	Cooling fan feedback missing.	See A581 Fan (page 70).
5081	Auxiliary fan broken	An auxiliary cooling fan is stuck or disconnected. 0001 – Auxiliary fan 1 broken 0002 – Auxiliary fan 2 broken	Check auxiliary fan(s) and connection(s). Replace fan if faulty.
5089	SMT circuit malfunction	Safe motor temperature fault is generated and STO event/fault/warning is not generated.	Check connection between the relay output of the module and the STO terminal.
5090	STO hardware failure	STO hardware diagnostics detected an hardware failure.	Contact ABB for hardware replacement.
5091	Safe torque off	Safe torque off function is active.	Check safety circuit connections parameter 95.04 Control board supply.
5092	PU logic error	Power unit memory is cleared.	Contact ABB.
5093	Rating ID mismatch	Mismatch of drive hardware and memory information.	Cycle power to the drive. You may have to repeat this.
5094	Measurement circuit temperature	Fault in internal temperature measurement.	Contact ABB.

Code (hex)	Fault / Aux. code aux code visible only on assistant control panel and drive composer))	Cause	What to do
5095	Redundant measurement	Duplicated measurements are beyond limits.	Contact ABB.
5096	Overtemperature hw	Excessive hardware temperature.	Contact your local ABB representative.
5098	I/O communication loss	Communication failure to standard I/O.	Try resetting the fault or cycle the power to the drive.
5681	PU communication	Communication errors between drive control unit and power unit.	Check connections and parameter 95.04 Control board supply.
5682	Power unit lost	Connection lost between drive control unit and power unit.	Check connections.
5690	PU communication internal	Internal communication error.	Contact ABB.
5691	Measurement circuit ADC	Measurement circuit fault.	Contact ABB.
5692	PU board powerfail	Power unit power supply failure.	Contact ABB.
5693	Measurement circuit DFF	Measurement circuit fault.	Contact ABB.
5695	Reduced run	Configured power units not found.	Configure the power units.
5697	Charging feedback	Charging feedback signal missing.	Check feedback signal from charging system
5698	Unknown PU fault	The power unit logic generated a fault which is not known by software.	Check the logic and software compatibility.
50A0	Fan	Cooling fan stuck or disconnected.	Check fan operation and connection. Replace fan if faulty.
6181	FPGA version incompatible	Firmware and FPGA versions are incompatible.	Reboot the control unit with parameter 96.08 Control board boot or by cycling power. If the problem persists, contact ABB.

EN

EN

Code (hex)	Fault / Aux. code aux code visible only on assistant control panel and drive composer))	Cause	What to do
6306	FBA A mapping file	Fieldbus adapter A mapping file read error.	Contact ABB.
6481	Task overload	Internal fault. Note: This fault cannot be reset.	Reboot the control unit using parameter 96.08 Control board boot or by cycling power. If the problem persists, contact ABB.
6487	Stack overflow	Internal fault.	Reboot the control unit. If the problem persists, contact ABB.
64A3	Application loading	Application file incompatible or corrupted.	Check the auxiliary code. See actions for each code below.
	8006	Not enough memory for the application.	Reduce the size of the application. Reduce the number of parameter mappings. See the drive-specific log generated by Automation Builder.
	8007	The application contains the wrong system library version.	Update the system library or reinstall Automation Builder. See the drive-specific log generated by Automation Builder.
	8008	The application is empty.	In Automation Builder, give a “Clean” command and reload the application.
	8009	The application contains invalid tasks.	In Automation Builder, check application task configuration, give a “Clean all” command, and reload the application.
	800A	The application contains an unknown target (system) library function.	Update the system library or reinstall Automation Builder. See the drive-specific log generated by Automation Builder.
64A1	Internal file load	File read error.	Reboot the control unit. If the problem persists, contact ABB.
64A4	Rating ID fault	Rating ID load error.	Contact ABB.
64A6	Adaptive program	Fault in adaptive program.	Check the fault code extension.

Code (hex)	Fault / Aux. code aux code visible only on assistant control panel and drive composer))	Cause	What to do
64B1	Internal SSW fault	A fatal error in the power-up phase of System Software (SSW).	SSW runs in partial functionality mode.
	1 - Starting OS time tick failed 2 - Creating system tasks failed 3 - Initializing file system failed 4 - Checking file system failed 5 - Initializing WoRm volumes failed 6 - Loading FPGA configuration failed 7 - Loading application program failed		
64B2	User set fault	Loading user parameter set failed.	Make sure a valid user parameter set exists. Reload if uncertain.
64B3	Macro parameterization error	Macro parameterization failed, eg. Parameter default value that cannot be changed has been attempted to write.	
64E1	Kernel overload	Operating system error. **Note:** This fault cannot be reset.	Reboot the control unit using parameter 96.08 Control board boot or by cycling power. If the problem persists, contact ABB.
6581	Parameter system	Parameter load or save failed.	Try forcing a save using parameter 96.07 Parameter save manually.
6591	Backup/Restore timeout	During backup creating or restoring operation a panel or PC-tool has failed to communicate with the drive as part of this operation.	Check panel or PC-tool communication and if it is still in backup or restore state.
65A1	FBA A parameter conflict	Requested functionality is not activated.	Check PLC programming. Check parameter groups 50 Fieldbus adapter (FBA) and 51 FBA A settings.

EN

EN

Code (hex)	Fault / Aux. code aux code visible only on assistant control panel and drive composer))	Cause	What to do
6681	EFB communication loss (Programmable fault: 58.14 Communication loss action)	Communication failed in embedded fieldbus (EFB) communication.	Check the status of the fieldbus master (online/offline/error etc.). Check cable connections to the EIA-485/X5 terminals 29, 30 and 31 on the control unit.
6682	EFB configuration file	Embedded fieldbus (EFB) configuration file could not be read.	Reload the firmware or replace the unit. Contact ABB.
6683	EFB invalid parameterization	Embedded fieldbus (EFB) parameter settings inconsistent or not compatible with selected protocol.	Check parameter group 58 Embedded fieldbus.
6684	EFB load fault	Embedded fieldbus (EFB) protocol firmware could not be loaded.	Reload the firmware or replace the unit. Contact ABB.
		Version mismatch between EFB protocol firmware and drive firmware.	
6685	EFB fault 2	Fault reserved for the EFB protocol application.	Check the documentation of the protocol.
6686	EFB fault 3		
6882	Text 32-bit table overflow	Internal fault.	Reset the fault. If fault persists, contact ABB.
6885	Text file overflow	Internal fault. The table size is too short for opening language file.	Reset the fault. If fault persists, contact ABB.
7081	Control panel loss	Control panel or PC tool ceased communicating.	Check connections. Disconnect and reconnect the control panel.
7082	I/O module comm loss	Communication between I/O module and drive is not working properly.	Check the I/O module installation.
7085	Incompatible option module	Fieldbus option module not supported.	Replace the module with a supported type.

Code (hex)	Fault / Aux. code aux code visible only on assistant control panel and drive composer))	Cause	What to do
7086	I/O module AI overvoltage	Overvoltage detected in AI. AI is changed to voltage mode from mA mode. AI will return automatically back to mA mode when the AI signal level is within acceptable limits.	Check AI signal levels.
7087	I/O module configuration	I/O module configuration not supported or illegal.	Check the auxiliary code. See actions for each code below.
	0001	S1/S2 DIP switch position on BIO-01 has changed after power up.	Reboot control unit either by cycling the power or through parameter 96.08 Control board boot to activate new DIP switch position.
	0002	S1/S2 DIP switch positions are such that DO1 would be in both S1 and S2 pins. This is not a supported combination.	Change S1/S2 DIP switch positions to a supported combination, see parameter 05.99 BIO-01 DIP switch status.
71A2	Mechanical brake closing failed	Mechanical brake control fault. Activated e.g., if brake acknowledgment is not as expected during brake closing.	Check mechanical brake connection. Check mechanical brake settings in parameter group 44 Mechanical brake control. Check that the acknowledgment signal matches the actual status of the brake.
71A5	Mechanical brake opening not allowed	Open conditions of mechanical brake cannot be fulfilled.	Check mechanical brake settings in parameter group 44 Mechanical brake control. Check that the acknowledgment signal (if used) matches the actual status of the brake.
7100	Excitation current	Excitation current feedback low or missing	Contact your local ABB representative.
7121	Motor stall	Motor is operating in stall region.	Check motor load, drive ratings and fault function parameters.

EN

EN

Code (hex)	Fault / Aux. code aux code visible only on assistant control panel and drive composer))	Cause	What to do
7122	Motor overload	Motor current is too high.	Check for overloaded motor Adjust the parameters used for the motor overload function. (35.51…35.53, 35.55, 35.56)
7181	Brake resistor	Brake resistor broken or not connected.	Check connections and brake resistor dimensioning.
7183	BR excess temperature	Brake resistor temperature has exceeded the limit.	Stop drive. Let resistor cool down. Check resistor overload protection function settings and fault limit settings. Check braking cycle limits.
7184	Brake resistor wiring	Brake resistor short circuit or brake chopper control fault.	Check connections.
7191	BC short circuit	Short circuit in brake chopper IGBT.	Check the electrical specifications. Replace brake chopper.
7192	BC IGBT excess temp	Brake chopper IGBT temperature exceeded internal fault limit.	Let chopper cool down. Check ambient temperature, cooling fan, air flow, resistor overload protection function settings, braking cycle limits and supply voltage.
71A3	Mech brake opening failed	Mechanical brake control is faulty. Brake open acknowledgment is not matching the actual status.	Check connections, brake settings and brake acknowledgment signal.
7310	Overspeed	Motor is turning faster than highest allowed speed.	Check the minimum/maximum speed settings, parameters 30.11 Minimum speed and 30.12 Maximum speed, motor braking torque, torque control, brake chopper and resistor(s).
73B0	Emergency ramp failed	Emergency stop did not finish within expected time.	Check predefined ramp times (23.11…23.15 for mode Off1, 23.23 for mode Off3).
73F0	Overfrequency	Maximum allowed output frequency exceeded.	Check the auxiliary code.

Code (hex)	Fault / Aux. code aux code visible only on assistant control panel and drive composer))	Cause	What to do
	00FA	Motor is turning faster than the highest allowed frequency due to incorrectly set minimum/maximum frequency or the motor rushes because of too high supply voltage or incorrect supply voltage selection in parameter 95.01 Supply voltage.	Check minimum/maximum frequency settings, parameters 30.13 Minimum frequency and 30.14 Maximum frequency. Check used supply voltage and voltage selection parameter 95.01 Supply voltage.
	Other	-	Contact your local ABB representative, quoting the auxiliary code.
7510	FBA A communication (Programmable fault: 50.02 FBA A comm loss func)	Cyclical communication between drive and fieldbus adapter module A or between PLC and fieldbus adapter module A is lost.	Check the status of fieldbus communication. Check parameter groups 50 Fieldbus adapter (FBA), 51 FBA A settings, 52 FBA A data in and 53 FBA A data out. Check cable connections and communication of master.
8001	ULC underload fault	User load curve: Signal has been too long under the underload curve.	See parameter 37.04 ULC underload actions.
	001	Underload occurred between speed point 37.11 ULC speed table point 1 and 37.12 ULC speed table point 2.	Check the load.
	002	Underload occurred between speed point 37.12 ULC speed table point 2 and 37.13 ULC speed table point 3.	Check the load.
	003	Underload occurred between speed point 37.13 ULC speed table point 3 and 37.14 ULC speed table point 4.	Check the load.

EN

EN

Code (hex)	Fault / Aux. code aux code visible only on assistant control panel and drive composer))	Cause	What to do
	004	Underload occurred between speed point 37.14 ULC speed table point 4 and 37.15 ULC speed table point 5.	Check the load.
8002	ULC overload fault	User load curve: Signal has been too long over the overload curve.	See parameter 37.03 ULC overload actions.
	001	Overload occurred between speed point 37.11 ULC speed table point 1 and 37.12 ULC speed table point 2.	Check the load.
	002	Overload occurred between speed point 37.12 ULC speed table point 2 and 37.13 ULC speed table point 3.	Check the load.
	003	Overload occurred between speed point 37.13 ULC speed table point 3 and 37.14 ULC speed table point 4.	Check the load.
	004	Overload occurred between speed point 37.14 ULC speed table point 4 and 37.15 ULC speed table point 5.	Check the load.
8009	Current limit	Motor actual current exceeded the limit defined in parameter 30.17 Maximum current.	Reduce the motor load. Check for any jam or stall in motor. See parameter 30.17 Maximum current.
80A0	AI supervision	An analog signal is outside the limits specified for the analog input.	Check signal level, auxiliary code, wiring connected to the input and the minimum/maximum limits of the input in parameter group 12 Standard AI.

Code (hex)	Fault / Aux. code aux code visible only on assistant control panel and drive composer))	Cause	What to do
	1 - AI1LessMIN 2 - AI1GreaterMAX 3 - AI2LessMIN 4 - AI2GreaterMAX		
80B0	Signal supervision 1	Fault generated by the signal supervision function 1.	Check the source of the fault (parameter 32.07 Supervision 1 signal).
80B1	Signal supervision 2	Fault generated by the signal supervision function 2.	Check the source of the fault (parameter 32.17 Supervision 2 signal).
80B2	Signal supervision 3	Fault generated by the signal supervision function 3.	Check the source of the fault (parameter 32.27 Supervision 3 signal).
80B3	Signal supervision 4	Fault generated by the signal supervision function 4.	Check the source of the fault (parameter 32.37 Supervision 4 signal).
80B4	Signal supervision 5	Fault generated by the signal supervision function 5.	Check the source of the fault (parameter 32.47 Supervision 5 signal).
80B5	Signal supervision 6	Fault generated by the signal supervision function 6.	Check the source of the fault (parameter 32.57 Supervision 6 signal).
9081	External fault 1	Fault in external device 1.	Check external device and parameter 31.01 External event 1 source.
9082	External fault 2	Fault in external device 2.	Check external device and parameter 31.03 External event 2 source.
9083	External fault 3	Fault in external device 3.	Check external device and parameter 31.05 External event 3 source.
9084	External fault 4	Fault in external device 4.	Check external device and parameter 31.07 External event 4 source.
9085	External fault 5	Fault in external device 5.	Check external device and parameter 31.09 External event 5 source.
A2A1	Current calibration	Current offset and gain measurement calibration will occur at next start.	Informative warning. (See parameter 99.13 ID run requested)

EN

EN

Code (hex)	Fault / Aux. code aux code visible only on assistant control panel and drive composer))	Cause	What to do
FA81	Safe torque off 1	Safe torque off function is active, ie. STO circuit 1 is broken.	Check safety circuit connections and parameter 95.04 Control board supply.
FA82	Safe torque off 2	Safe torque off function is active, ie. STO circuit 2 is broken.	
FF61	ID run	Motor ID run was not completed successfully.	Check • nominal motor values in parameter group 98 User motor parameters. • that no external control system is connected to the drive. • that no operation limits prevent the completion of the ID run. Restore parameters to default settings and try again. • that the motor shaft is not locked. Cycle the power to the drive (and its control unit, if powered separately).

Code (hex)	Fault / Aux. code aux code visible only on assistant control panel and drive composer))	Cause	What to do
	1 - Maximum current limit too low		B - (Asynchronous motors only) Speed dropped to zero during ID run.
	2 - Maximum speed limit or calculated field weakening point too low		C - (Permanent magnet motors only). First acceleration did not finish within reasonable time.
	3 - Maximum torque limit too low		D - (Permanent magnet motors only). Second acceleration did not finish within reasonable time.
	4 - Current measurement calibration not finished within reasonable time		E...10 - Internal error
	5...8 - Internal error		11 - (Synchronous reluctance motors only). Pulse test error.
	9 - (Asynchronous motors only). Acceleration not finished within reasonable time.		12 - Motor too large for advanced standstill ID run.
	A - (Asynchronous motors only) .Deceleration not finished within reasonable time.		13 - (Asynchronous motors only). Motor data error.
FF63	STO diagnostics failure.	SW internal malfunction.	Reboot the control unit (using parameter 96.08 Control board boot or by cycling power.
FF81	FB A force trip	A fault trip command through fieldbus adapter A.	Check the fault information provided by the PLC.
FF8E	EFB force trip	A fault trip command through embedded fieldbus interface.	Check the fault information provided by the PLC.

HI -त्वरति इंस्टालेशन और स्टार्ट-अप गाइड

This guide instructs how to install and start-up the ACS560 drive of all frame sizes (R0...R8). For complete information, see the drive *ACS560 standard control program firmware manual* (3AXD50000044997[English]) and *ACS560 drives (0.75 to 160 kW, 1.0 to 215 hp) hardware manual* (3AXD50000044998[English]).

[illegible]

सुरक्षा नर्देशों का पालन करें

[illegible]

- [illegible]
- [illegible]
  5 [illegible]
- [illegible]
- [illegible]
- [illegible]
- [illegible]

कैपेसटिर में सुधार करें

[illegible]

[illegible] XXXX [illegible]

YY: 13, 14, 15, … 2013, 2014, 2015 [illegible]

WW: 01, 02, 03, … 1, 2, 3, [illegible]

[illegible] 9 [illegible])

पावर केबल्स का चयन करें

[illegible]

कूलगि सुनश्चिति करें

[illegible]

- 50 °C (+122 °F) for R0...R2 [illegible]
- 40 °C (+104 °F) for R3...R8 frames

[illegible]

■ ड्राइव और इनपुट पावर केबल की रक्षा करें

[illegible]

[illegible]

[illegible]

- [illegible] DIN [illegible] R0 [illegible] R2 [illegible]
  [illegible]
- [illegible] (R0 [illegible] R3) [illegible]

ड्राइव इंस्टाल करने के लिए आवश्यक उपकरण

- [illegible]
- Screwdriver (Flat head, Phillips head, and Torx)
- [illegible] ([illegible])
- [illegible]
- [illegible]

DIN इंस्टालेशन रेल पर ड्राइव इंस्टाल करना (केवल फ़्रेम R0...R2)

1. [illegible]
2. [illegible]

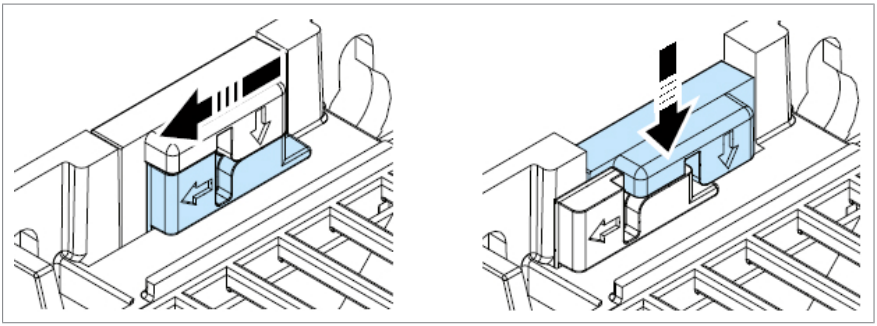

3. DIN [illegible]
4. DIN [illegible]
5. [illegible]
6. [illegible]
7. [illegible]

DIN इंस्टालेशन रेल से ड्राइव को हटाना (केवल फ़्रेम R0...R2)

[illegible]

पेंच के साथ ड्राइव इंस्टाल करना (फ्रेम R0...R8)

All drives of frames R0...R8 can be installed on a wall with screws. See the required screw sizes in below mounting dimensions table. See also [illegible]

[illegible] !
[illegible] (R6...R8) [illegible] (45...70 kg) [illegible]

- [illegible]
- [illegible]
- [illegible]

1. [illegible]

[illegible]	[illegible]									
	[illegible]	R0	R1	R2	R3	R4	R5	R6	R7	R8
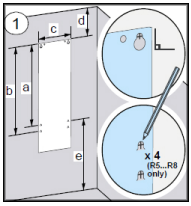	[illegible] (mm)	M5			M6		M8			
	a	191			473	619	581	531	583	658
	b	-					612	571	623	701
	[illegible]	50	75	148	160			213	245	263
	d	75			-					
	e	75			200					
	[illegible] (kg)	4.47	4.57	7.54	14.86	23.0	28.0	45.0	55.0	70.0

2. [illegible]
3. [illegible]
4. [illegible]
5. [illegible]

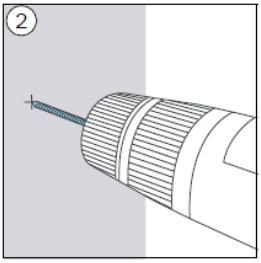

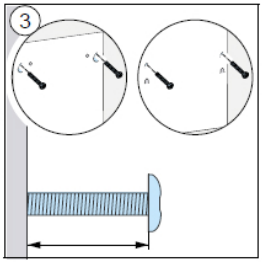

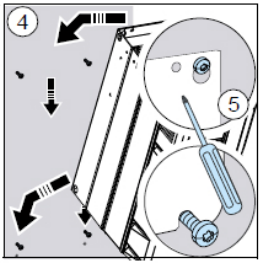

HI

R0 [illegible]

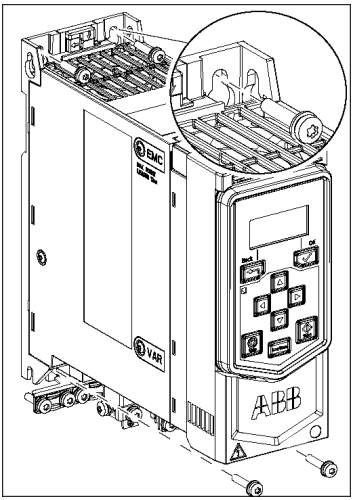

6. R5...R8: [illegible] (6a), [illegible] (6b) [illegible] (6c)
7. R5...R8: [illegible]
8. R5...R8: [illegible]

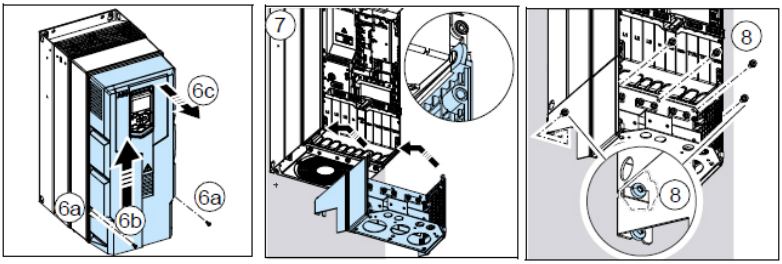

Measuring the insulation resistance of the motor and motor cable

Obey the safety instructions of the drive. If you ignore them, injury or death, or damage to the equipment can occur. If you are not a qualified electrical professional, do not do installation, commissioning or maintenance work.

1. Follow the electrical safety precautions. See Electrical safety instructions in the hardware manual.
2. Make sure that the motor cable is disconnected from the drive output terminals.
3. Measure the insulation resistance between each phase conductor and the protective earth conductor. Use a measuring voltage of 1000 V DC. The insulation resistance of an ABB motor must be more than 100 Mohm (reference value at 25 °C [77 °F]). For the insulation resistance of other motors, refer to the manufacturer's instructions.

   [Translation missing] Moisture inside the motor reduces the insulation resistance. If you think that there is moisture in the motor, dry the motor and do the measurement again.

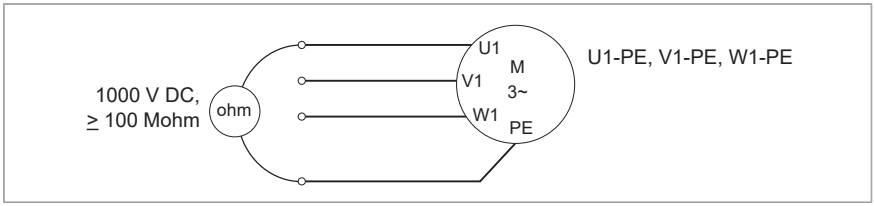

HI

[illegible]

कनेक्शन आरेख

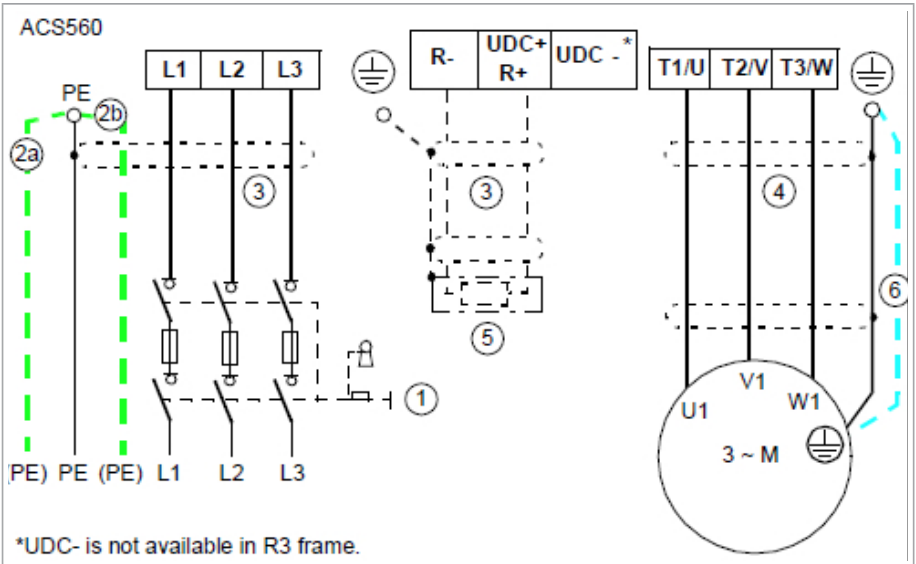

1	[illegible]
2	[illegible]
3	360° grounding is recommended if shielded cable is used. Ground the other end of the input cable shield or PE conductor at the distribution board.
4	360° grounding is required.
5	[illegible]
6	[illegible] IEC 61439-1 [illegible]

[illegible]
30 kW [illegible]

HI

कनेक्शन प्रक्रिया: फ्रेम R0...R2

If the drive is connected on an IT (ungrounded) system, make sure that the EMC filter and Varistor (VAR) is disconnected. For more information, see hardware manual.

1. [illegible]

- [illegible] (1a) [illegible]
- [illegible] (1b) [illegible]

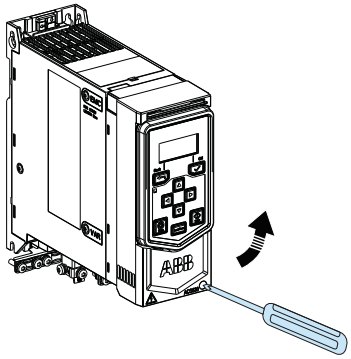

[illegible]

2. [illegible] (2a) [illegible]

[Translation missing] The bare shield will be grounded 360°.

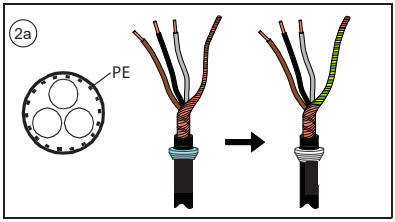

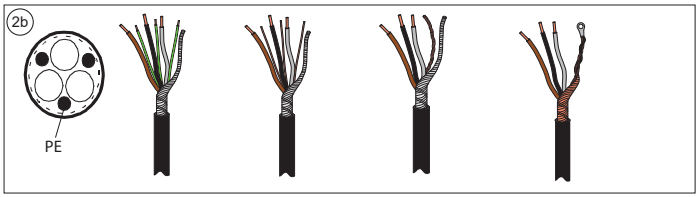

3. [illegible]

- Ground the shield 360° by tightening the clamp of the power cable grounding shelf onto the stripped part of the cable (3a).
- [illegible]
- [illegible]

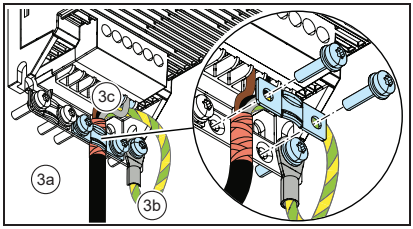

- [illegible]

[illegible]	R0...R1		R2	
	N·m	lbf·ft	N·m	lbf·ft
T1/U. T2/V. T3/W	0.5…0.6	0.4	1.2…1.5	0.9…1.1

HI

[illegible]

4. [illegible]

[Translation missing] The bare shield will be grounded 360°. Mark the pigtail made from the shield as a PE conductor with yellow-and-green color

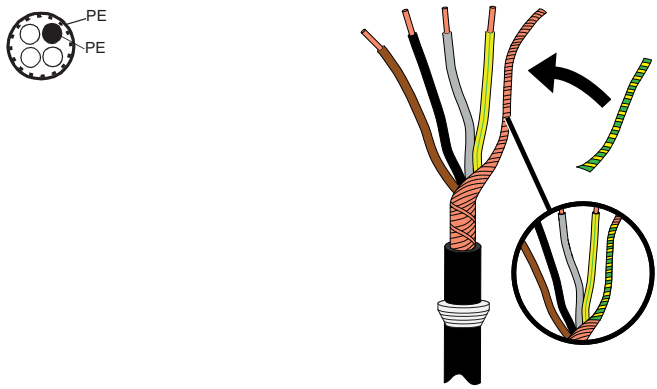

HI

5. [illegible]

- [illegible] (6a) [illegible]
- [illegible] L1, L2, L3 [illegible]

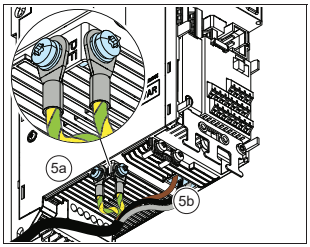

- [illegible]:

[illegible]	R0…R1		R2	
	N·m	lbf·ft	N·m	lbf·ft
L1, L2, L3	0.5…0.6	0.4	1.2…1.5	0.9…1.1

6. [illegible]

7. Ground the shield 360° (6a).

>8. [illegible]

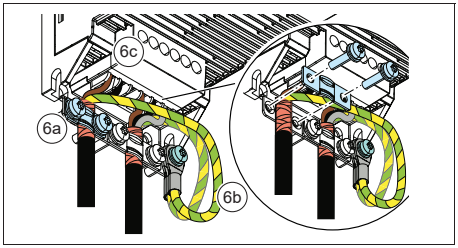

9. [illegible]

[illegible]	R0…R1		R2	
	N·m	lbf·ft	N·m	lbf·ft
UDC+/R+, R-	0.5…0.6	0.4	1.2…1.5	0.9…1.1

HI

[illegible]

10. Ground the motor cable shield at the motor end. For minimum radio frequency interference, ground the motor cable shield 360° at the lead-through of the motor terminal box.

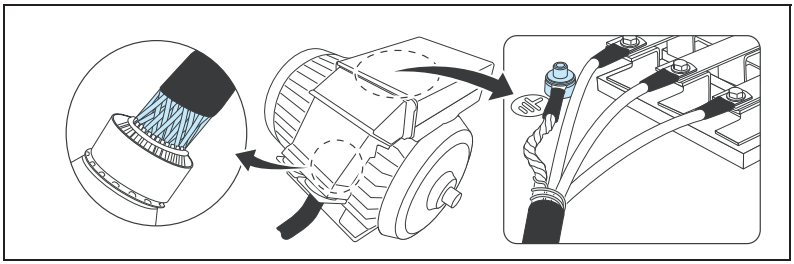

कनेक्शन प्रक्रिया, फ्रेम R3 ... R4

If the drive is connected on an IT (ungrounded) system, make sure you have disconnected the EMC filter and Varistor (VAR). See EMC (196).

1. [illegible]

- (1a) [illegible]
- [illegible]

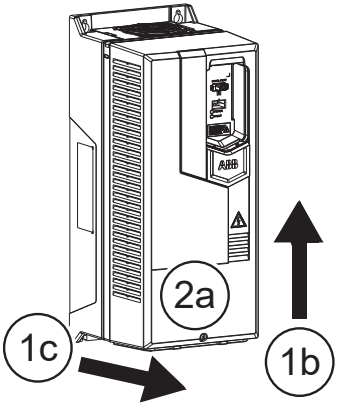

[illegible]

2. [illegible]

[Translation missing] The bare shield will be grounded 360°.

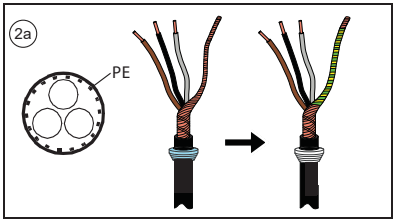

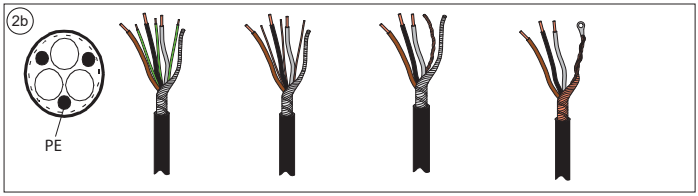

3. [illegible]

If the power cable is temporarily removed from the grounding shelf, connect the motor and input power cables except the 360° grounding, and then reinstall the grounding shelf.

- Ground the shield 360° by tightening the clamp of the power cable grounding shelf onto the stripped part of the cable (4a).
- [illegible] (4b) [illegible]
- [illegible] T1/U, T2/V, T3/W [illegible]
- [illegible]:

[illegible]	R3		R4	
	N·m	lbf·ft	N·m	lbf·ft
T1/U. T2/V. T3/W.	2.5…4.5	1.8…3.3	4.0	3.0

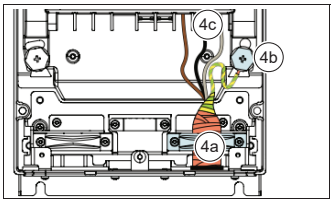

[illegible]:

- [illegible]
- After reinstalling the grounding shelf, you can make the 360° grounding for the cables.

[illegible]

4. [illegible]

[illegible] [Translation missing] The bare shield is grounded 360°. Mark the pigtail made from the shield as a PE conductor with yellow-and-green color.

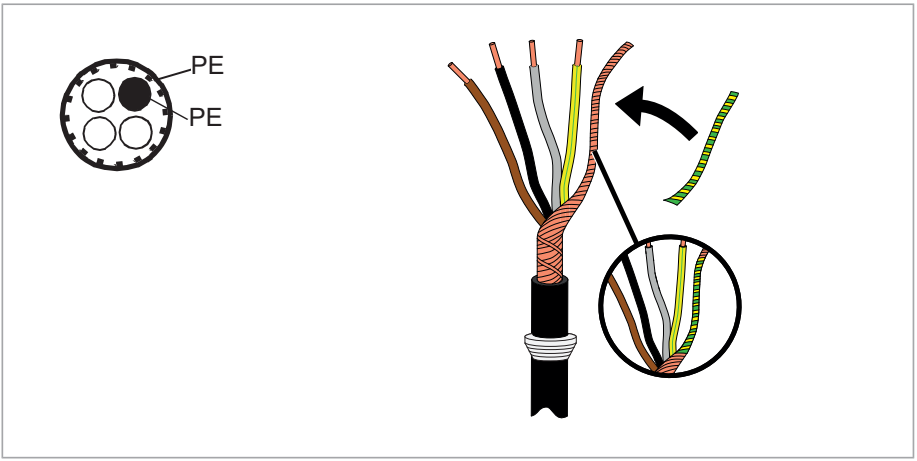

HI

5. [illegible]

- Ground the shield 360° by tightening the clamp of the power cable grounding shelf onto the stripped part of the cable (6a).
- [illegible] (6b) [illegible]
- [illegible] L1, L2, L3 [illegible]
- [illegible]

[illegible]	R3		R4	
	N·m	lbf·ft	N·m	lbf·ft
L1, L2, L3	2.5…4.5	1.8…3.3	4.0	3.0

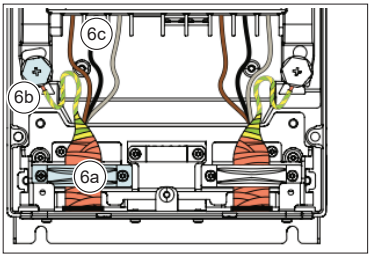

6. [illegible]

7. Ground the shield 360° (7a).

8. [illegible] (7b) [illegible]

9. R3 [illegible] R4 [illegible] (7c) [illegible]

10. [illegible]

[illegible]	R3	
	N.m	lbf.ft
R+, R-	2.5...4.5	1.8...3.3

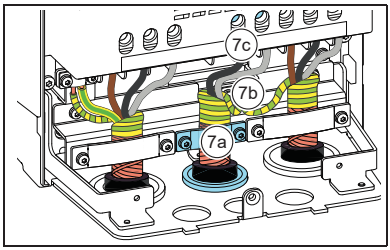

[illegible]

11. [illegible]

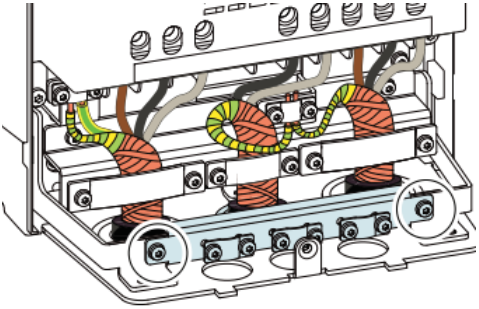

12. Ground the motor cable shield at the motor end. For minimum radio frequency interference, ground the motor cable shield 360° at the lead-through of the motor terminal box.

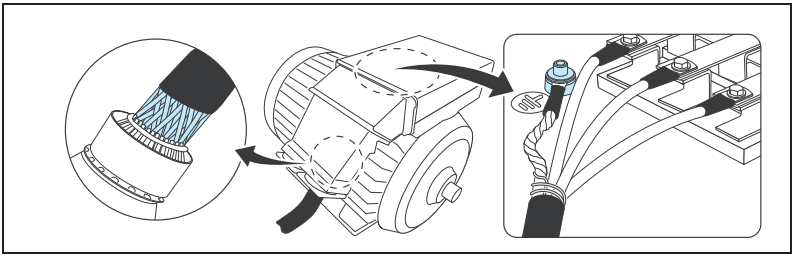

कनेक्शन प्रक्रिया, फ्रेम **R5...R8**

If the drive will be connected on an IT (ungrounded) system, make sure you have disconnected the EMC filter and Varistor (VAR). See EMC (196).

1. [illegible]
2. [illegible]
   - [illegible]
   - [illegible]

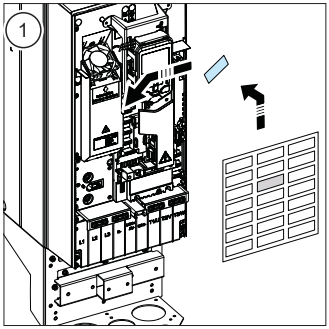

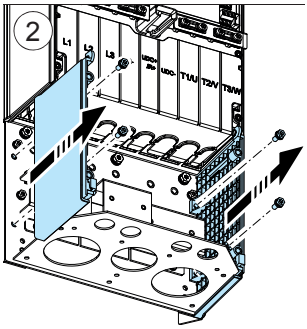

3. [illegible]
4. [illegible]
5. R8: [illegible]

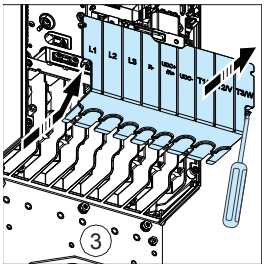

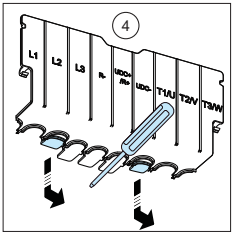

R8 [illegible]

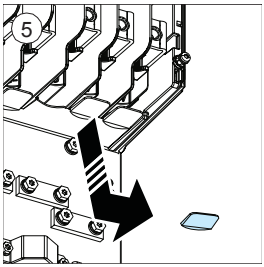

HI

6. [illegible]

7. Prepare the ends of the input power cable and motor cable as illustrated in the figure. If you use aluminum cables, put grease on the peeled aluminum cable before connecting it to the drive. Two different motor cable types are shown in the figures (7a, 7b).

[illegible] [Translation missing] The bare shield is grounded 360°. Mark the pigtail made from the shield as a PE conductor with yellow-and-green color.

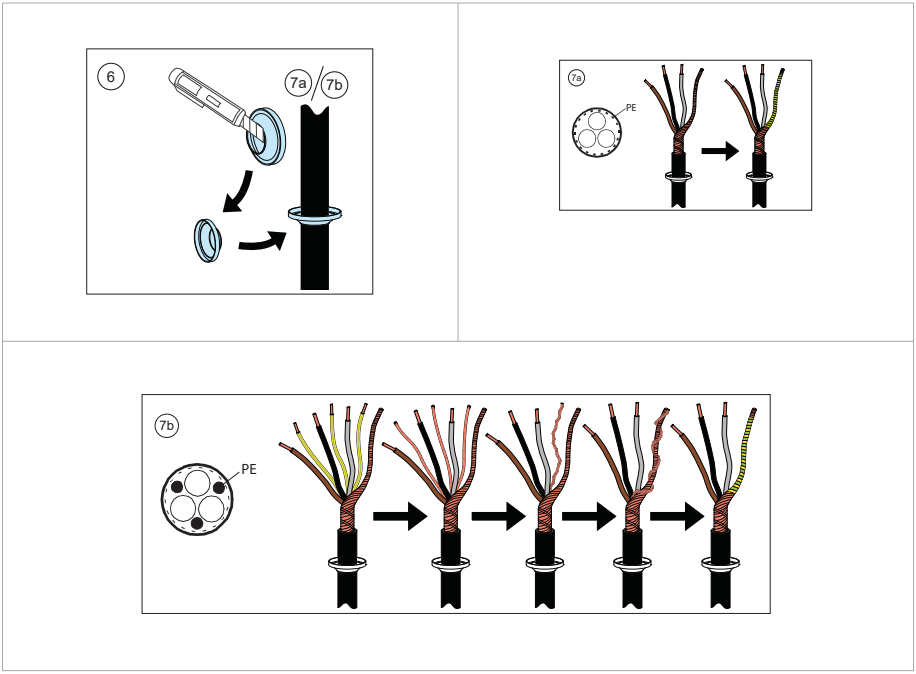

8. [illegible]

9. [illegible]

- Ground the shield 360° under the grounding clamps.
- [illegible]
- [illegible]

[illegible]

- [illegible]
- [illegible]

[illegible]

10. [illegible]

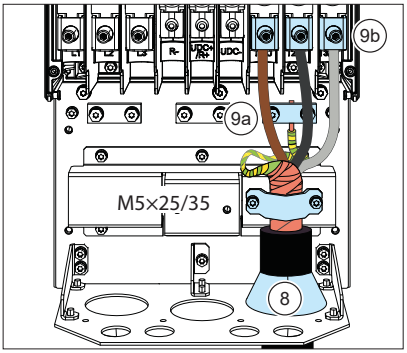

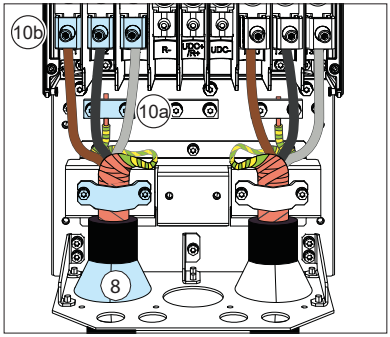

HI

[illegible]	L1, L2, L3, T1/U, T2/V, T3/W		PE ⏚			
	N·m	lbf·ft	N·m	lbf·ft	N·m	lbf·ft
R5	5.6	4.1	2.2	1.6	1.2	0.9
R6	30	22.1	9.8	7.2	1.2	0.9
R7	40	29.5	9.8	7.2	1.2	0.9
R8	40	29.5	9.8	7.2	1.2	0.9

T1/U, T2/V [illegible] T3/W [illegible]

- [illegible]
- [illegible]
- [illegible]

[illegible]

- [illegible] N·m (22 lbf·ft) [illegible]
- [illegible] R8 [illegible] N·m (30 lbf·ft) [illegible] R8 [illegible] N·m (52 lbf·ft) [illegible]

L1, L2 [illegible] L3 [illegible]

- [illegible]
- [illegible]
- [illegible]

[illegible] tightening can damage the drive and cause danger.

- [illegible] 30 N·m (22 lbf·ft) [illegible]
- [illegible] R8: 40 N·m (30 lbf·ft) [illegible] R8: 70 N·m (52 lbf·ft) [illegible]

11. [illegible] R8: [illegible] (11b) [illegible]

R8: [illegible]

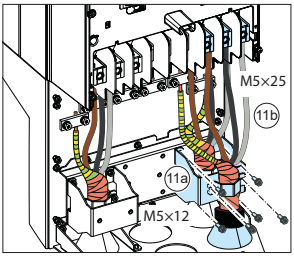

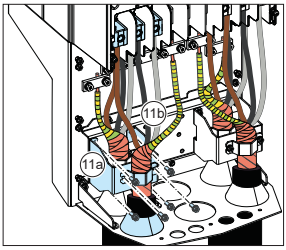

12. [illegible]
13. [illegible]
14. [illegible]

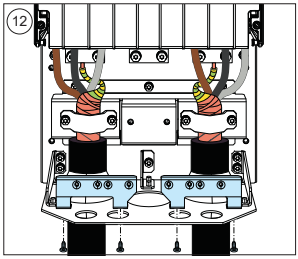

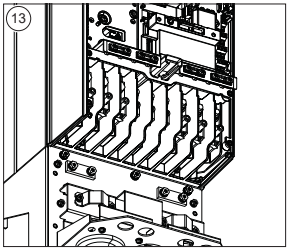

HI

15. Ground the motor cable shield at the motor end. For minimum radio frequency interference, ground the motor cable shield 360° at the lead-through of the motor terminal box.

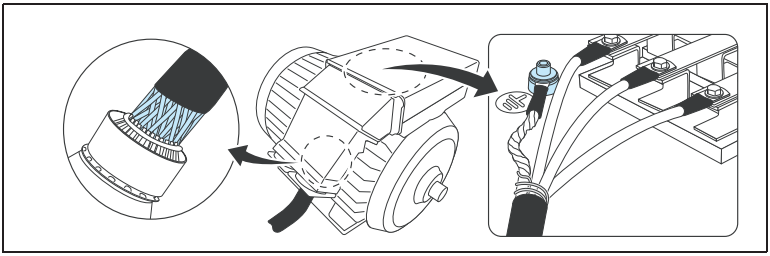

HI

DC [illegible]

UDC+ [illegible] UDC- [illegible] (R4 [illegible] R8 [illegible])

[illegible]

[illegible] A B [illegible] (C) [illegible]

I/O (ABB मानक)

कनेक्शन आरेख

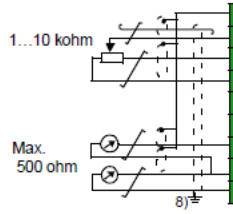

X1	Reference voltage and analog inputs and outputs	
1	SCR	Signal cable shield (screen)
2	AI1	External frequency reference: 0…10 V[1) 4)] *22.11*
3	AGND	Analog input circuit, common
4	+10V	10 V DC reference voltage
5	AI2	Not configured [2)]
6	AGND	Analog input circuit, common
7	AO1	Output frequency: 0/4…20 mA or 0...10V *13.12*
8	AO2	Output current: 0/4…20 mA *13.22*
9	AGND	Analog output circuit common

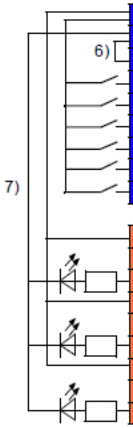

X2, X3	Aux. voltage output and programmable digital inputs	
10	+24V	Aux. voltage output +24 VDC, max. 250 mA[3)]
11	DGND	Aux. voltage output common
12	DCOM	Digital input common for all
13	DI1	Stop (0) / Start (1) *20.03*
14	DI2	Forward (0) / reverse (1) *20.03*
15	DI3	Constant frequency selection[4)] *28.22*
16	DI4	Constant frequency selection[4)] *28.23*
17	DI5	Ramp selection: Ramp 1 (0) / Ramp 2 (1)[5)] *28.71*
18	DI6	Not configured

X6,X7, X8	Relay outputs	
19	RO1C	**Ready run** *10.24* 250 V AC / 30 V DC 2 A
20	RO1A	
21	RO1B	
22	RO2C	**Running** *10.27* 250 V AC / 30 V DC 2 A
23	RO2A	
24	RO2B	
25	RO3C	**Fault (-1)** *10.30* 250 V AC / 30 V DC 2 A
26	RO3A	
27	RO3B	

X5	Built-in Modbus	
29	B+	Internal Modbus RTU (EIA-485).
30	A-	
31	DGND	

(Frame R0~R2)		
S100	TERM&BIAS	Termination resistor and bias resistor switch

(Frame R3~R8)		
S100	TERM	Termination resistor switch
S200	BIAS	Bias resistor switch

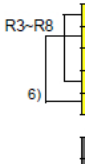

X4	Safety torque off		
	R0~R2	R3~R8	
33	-	OUT1	Safety torque off function. Factory connection. Both circuits must be closed for the drive to start. See *Safe torque off function* in the drive *hardware* manual.
34	SGND	OUT2	
35	OUT1	SGND	
36	[9)] IN1	IN1	
37	[6)] IN2	IN2	

X10	24 V AC/DC (frames R6~R8 only)	
40	24 V AC/DC- in	24V AC/DC input, for control unit power supply when external main power is disconnected.
41	24 V AC/DC+ in	
	Redundant auxiliary voltage output (frames R0~R2)	
42	+24 V	Aux. voltage output +24 V DC, max. 250 mA[3)]
43	DGND	Aux. voltage output common
44	DCOM	Digital input common for all

HI

[illegible] (53).

[illegible]

- (RO1...RO3): 0.14…1.5 mm^2 ([illegible])
- tightening torques: 0.5…0.6 N·m (0.4 lbf·ft)

[illegible]:

1) [0(4)...20 mA, R_{in} < 500 ohm] [0(2)...10 V, R_{in} > 200 kohm] 12...15 AI1 [illegible]

2) [0(4)...20 mA, R_{in} = 100 ohm] or [0(2)...10 V, R_{in} > 200 kohm] 12...25 AI2 [illegible]

3) [illegible] +24V (X2:10) [illegible] 600 W (250 mA / 24 V) - [illegible] (DI1...DI2, RO1, DI3...DI6 - RO2~RO3) [illegible]

4) [illegible]

HI

28.22 [illegible]	28.23 [illegible]	[illegible]
0	0	AI1 [illegible]
1	0	[illegible]
0	1	[illegible]

5) [illegible]

DI5 28.71 [illegible]	[illegible]	[illegible]
		[illegible])
0	[illegible] / [illegible]	28.72 [illegible]
		28.73 Freq deceleration time 1
1	[illegible] / [illegible]	28.74 [illegible]
		28.75 [illegible]

6) [illegible]

7) RO1~RO2 [illegible]

8) [illegible]

9) Ground the outer shield of the cable 360° under the grounding clamp on the grounding shelf for the control cables.

10) [illegible]

11) [illegible]

[illegible]

ACS560-01 [illegible]

- CMOD-02 power extension module (for R3...R5 frames)
- BAPO-01 power extension module (for R0...R2 frames)
- BIO-01 I/O [illegible] (R0...R2 frames [illegible])
- Fieldbus module (in frames R0...R2 frames, fieldbus module can be used with BIO-01 also)
  [illegible]

For more information on optional modules, see hardware manual.

हार्डवेयर का विवरण

[illegible]

The BIO-01 front option module (Option +L515) is an I/O extension module for R0...R2 frames and can also be used with any of the fieldbus optional module. The BIO-01 I/O extension module provides:

- [illegible] (DI3, DI4, DI5)
- [illegible] (AI1), [illegible]
- 1 [illegible] (DO1) [illegible]

The digital output (DO1) is referred as DIO1 in the firmware. This works only in output mode. You can also use DI4 and DI5 as frequency inputs and DO1 as a frequency output.

BIO-01 [illegible]

[illegible]

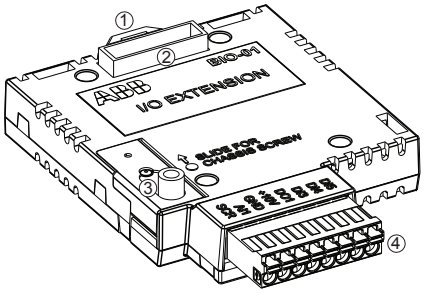

1. Locking tab
2. Fieldbus option module slot
3. Chassis screw
4. I/O connector

HI

BIO-01 वद्युत कनेक्शन

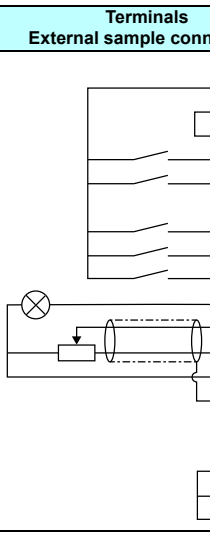

Terminals External sample connection	Description	Base unit	Internal connection
	Aux. voltage output and prog. digital input		
+24V	Aux. output +24 V DC, max. 200 mA	X	
DGND	Aux. voltage output common	X	
DCOM	Digital input common for all	X	
DI1	Stop (0)/Start (1)	X	
DI2	Forward (0)/Reverse (1)	X	
	Digital and analog I/O extension BIO-01		
DI3	Constant frequency/speed selection		
DI4	Constant frequency/speed selection		
DI5	Ramp set 1 (0)/Ramp set 2 (1)		
DO1	Not configured		
AI1	Output frequency/speed ref: 0...10 V		
+10V	Ref. voltage +10 V DC (max. 10 mA)		
GND	Analog circuit common / DO common		
SCR	Signal cable shield / DO screen		
	Safe torque off (STO)		
SGND	Safe torque off. Factory connection. Both circuits must be closed for the drive to start.	X	
IN1		X	
IN2		X	
OUT1		X	

HI

BIO-01 इंस्टॉल करें

By default, RIIO-01 module is provided in ACS560 standard R0...R2 drives. You can remove the RIIO-01 module and can install BIO-01 and/or fieldbus adapter module (+Fxxx).

BIO-01 [illegible]

1. [illegible]
2. [illegible]

   [illegible] R0 ... R2 [illegible]

   a. [illegible]
   b. [illegible]

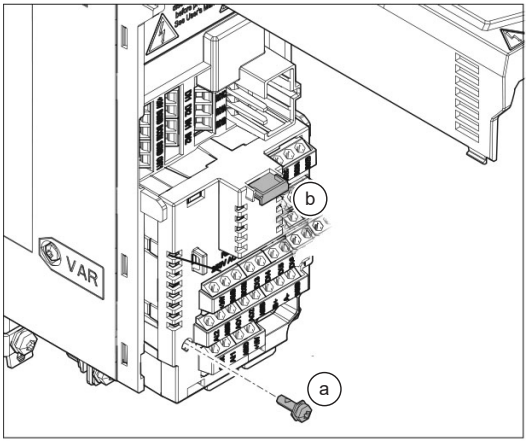

c. [illegible]

[illegible]

3. Align the BIO-01 module with the option module slot in the front of the drive.
4. Push the BIO-01 option module into position.

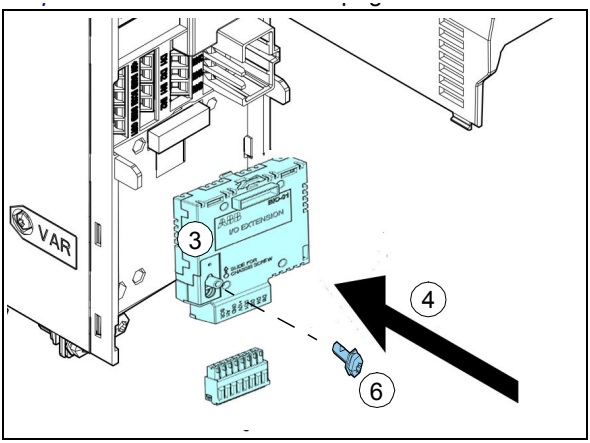

5. [illegible]

[To be translated (TP-62)] If required, you can install fieldbus module on top of the BIO-01 module.

BIO-01 [illegible]

IT ([illegible])

EMC फ़िल्टर

[illegible]

[illegible]!
[illegible]

[illegible]

ग्राउंड-टू-फेज़ वेरिस्टर

[illegible]

[illegible]!
[illegible]

[illegible]

[illegible]

[illegible]	EMC [illegible] (EMC)	Ground- to-phase varistor (VAR)	[illegible] [1]	[illegible] [2]	IT ([illegible] ohms]) [3]
R0...R3	EMC (1 screw)	-	[illegible]	[illegible]	[illegible]
	-	VAR (1 screw)	[illegible]	[illegible]	[illegible]
R4...R5	EMC (2 screws)	-	[illegible]	R4 R5 [illegible]	[illegible]
	-	VAR (1 screw)	[illegible]	[illegible]	[illegible]
R6...R8	EMC (2 screws)	-	[illegible]	[illegible]	[illegible]
	-	VAR(1 screw)	[illegible]	[illegible]	[illegible]

	EMC [illegible] (EMC)	Ground- to-phase varistor (VAR)	TN (TN-S) [1] [illegible]	TN [2] [illegible]	IT ([illegible] ohms]) [3]
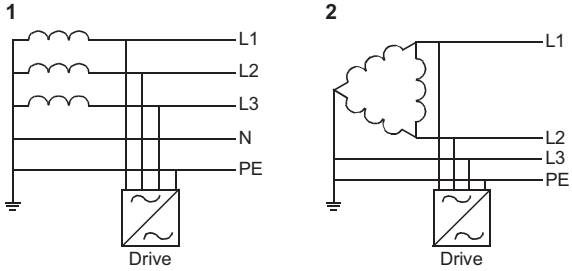					

HI

[illegible]

कवरों को पुनर्स्थापित करना, फ्रेम आकार **R0...R2**

1. [illegible]
2. [illegible]

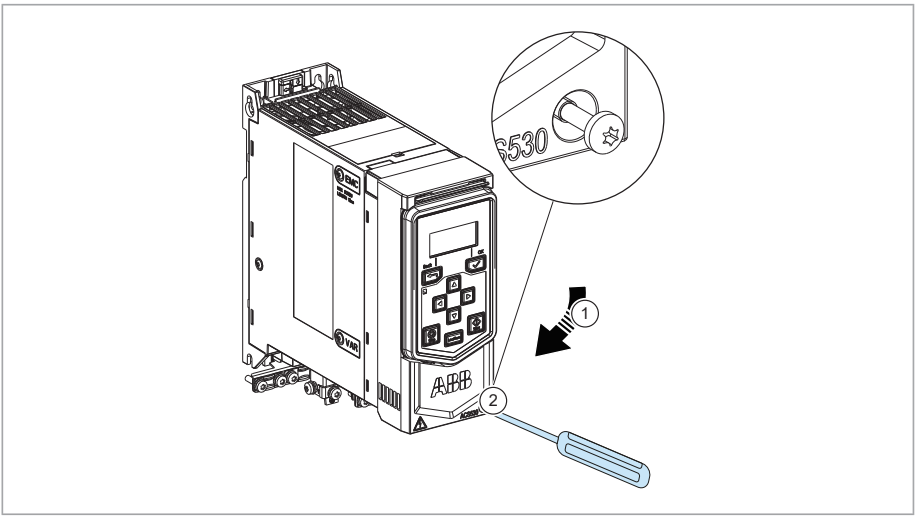

कवरों को पुनर्स्थापित करना, फ्रेम आकार **R3, R4**

1. [illegible]
2. [illegible]

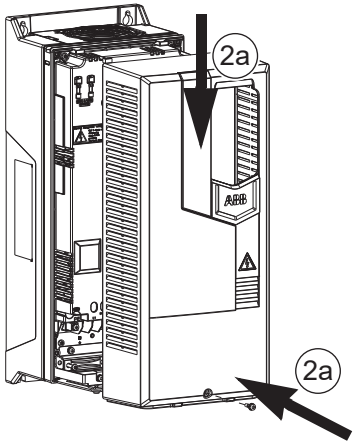

साइड प्लेट्स और कवरों को पुनर्स्थापित करना, फ्रेम आकार **R5...R8**

1. [illegible]
2. [illegible]

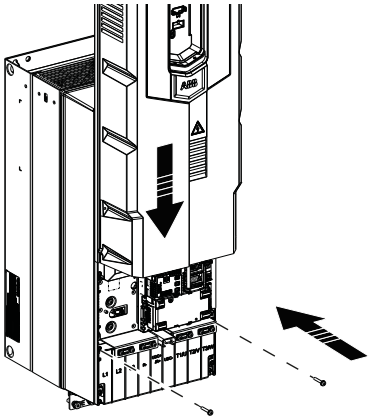

[illegible]

[illegible]	[illegible]
R5	1. [illegible] 2. [illegible]

[illegible]	[illegible]	
	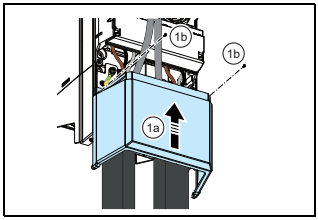	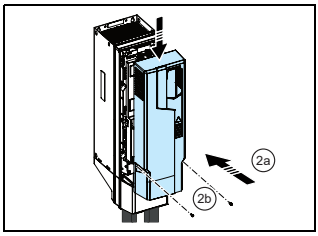
R6...R8	1. [illegible] (1a) [illegible] (1b) [illegible] 2. [illegible] (2a) [illegible] 3. [illegible] (3a) [illegible] (3b) [illegible]	
	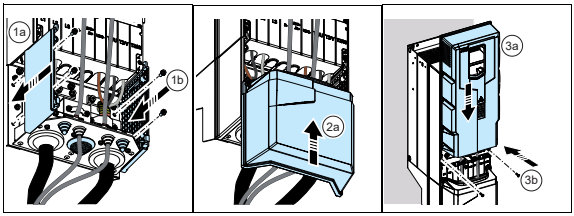	

HI

[illegible]

[illegible]

[illegible] 32527 [[illegible]])

शुरू करने से पहले

[illegible]

नियंत्रण पैनल का प्रयोग

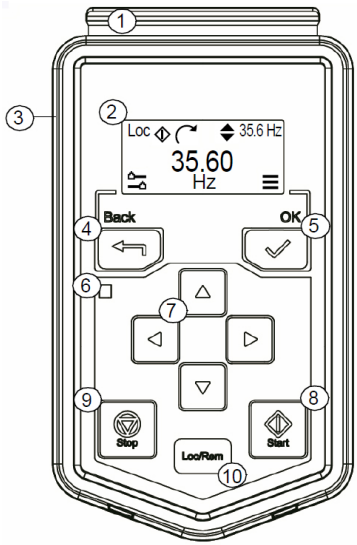

1	[illegible]
2	[illegible] Set parameter 49.19 [illegible]
3	**RJ-45** [illegible]
4	[illegible]
5	**OK** [illegible]
6	**LEDs** [illegible] • [illegible] • [illegible] • [illegible]
7	[illegible] (49.21). [illegible])
8	[illegible]
9	[illegible]
10	[illegible]

HI

डिस्प्ले

[illegible]

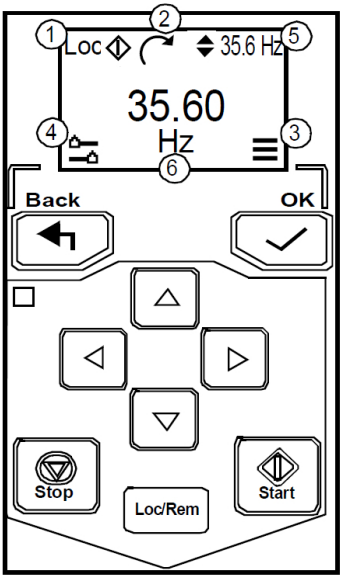

1	[illegible] • [illegible] • [illegible]
2	[illegible]
3	[illegible]
4	[illegible]
5	[illegible]
6	[illegible]

HI

मुख्य मेनू

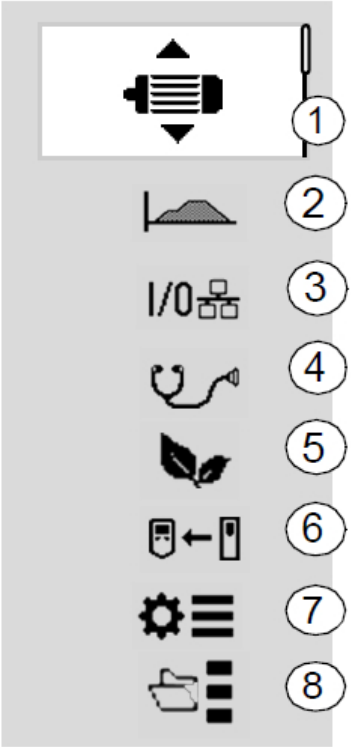

1	Motor data
2	Motor control
3	Connection macro
4	□ □ □ □ □ □ □ □ □ □ □ □
5	Energy Efficiency
6	Backup data
7	Parameter settings
8	Complete parameter list

□ □ □ □ □ □

[illegible]

[illegible]

[illegible]

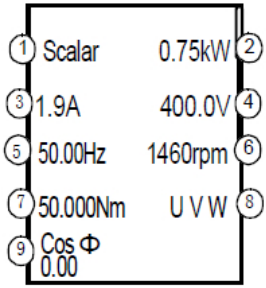

1	1) [illegible]
2	2) [illegible]
3	3) [illegible]
4	4) [illegible]
5	5) [illegible]
6	6) [illegible]
7	7) [illegible]
8	8) [illegible], U W V
9	9) [illegible]

[illegible]

[illegible]

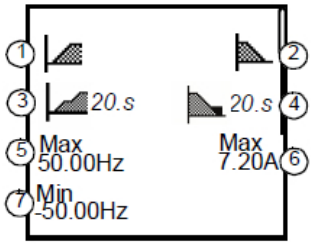

1	**Start mode** – Automatic, constant time, Fast
2	**Stop mode** – Coast, Ramp
3	**Acceleration time** - Time for speed to change from zero to the speed defined by parameter.
4	**Deceleration time** - Time for speed to change from the speed defined by parameter to zero.
5	**Maximum frequency/ Speed** - Maximum allowed frequency/speed.
6	**Maximum current** - Maximum allowed current.
7	**Minimum frequency/ Speed** - Minimum allowed frequency/speed.

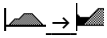

[redacted]

1	1) [redacted]
2	2) [redacted]
3	3) [redacted]

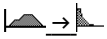

[redacted]

1	**Coast** - default stop mode. Stops by switching off the output semiconductors of the drive.
2	**Ramp** - Stops along the active deceleration ramp.

I/O [illegible]

[illegible]

1	**Macro** - Displays the selected macro name. For example, **ABB standard (2-wire)**.
2	**I/O Connections** - Displays the selected macro-specific I/O connections. See menu description below.

I/O → 1 2

[illegible]

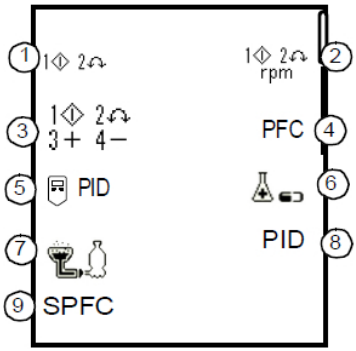

1	1) **ABB** [illegible]
2	2) **3-** [illegible]
3	3) **ABB** [illegible]
4	4) [illegible]
5	5) **PID -** [illegible] ,
6	6) **PFC -** [illegible]
7	7) **PID** [illegible]
8	8) **SPFC** - PFC [illegible]
9	9) [illegible]
10	10) [illegible]
11	11) [illegible]
12	12 **Jigar** - Suitable for Jigar machine operations.

I/O → I/O

[illegible]

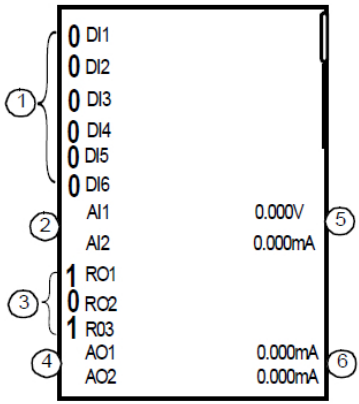

1	**DI** - Digital Inputs DI1...DI6
2	**AI** - Analog Inputs AI1...AI2
3	**RO** - Relay Outputs RO1...RO3
4	**AO1** - Analog Outputs AO1...AO2
5	AI1 and AI2 values
6	AO1 and AO2 values

[illegible]

[illegible] Diagnostics (139). [illegible]

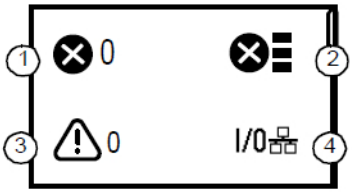

1	**Active Fault** - Displays active faults.
2	**Fault History** - Lists the fault history.
3	**Active Warnings** - Displays active warnings.
4	**I/O status** - I/O settings.

[illegible]

[illegible]

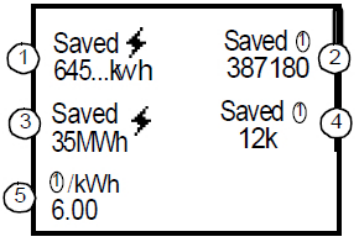

1	**Saved energy in kWh** - Energy saved in kWh compared to direct-on-line motor connection.
2	**Saved money** - Monetary savings compared to direct-on-line motor connection.
3	**Saved energy in MWh** - Energy saved in MWh compared to direct-on-line motor connection.
4	**Saved money x 1000** - Monetary savings in thousands compared to direct-on-line motor connection.
5	**Cost per kWh** - Energy cost (in INR) per kWh.

[illegible]

[illegible]

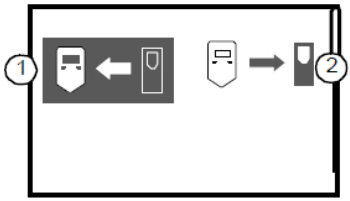

1	Backup from the drive to the control panel.
2	Restore the back up from the panel to the drive. [illegible]

[illegible]

[illegible] listing (53). [illegible]

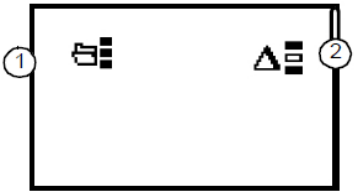

1	Access to complete parameter list from the main menu.
2	Modified parameters list.

[illegible]

[illegible] listing (53). [illegible]

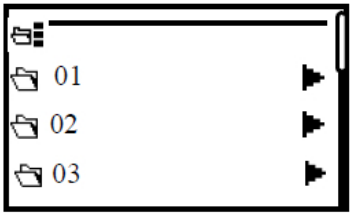

1	Access to the complete parameter list.

HI

■ वकिल्प मेनू

[illegible]

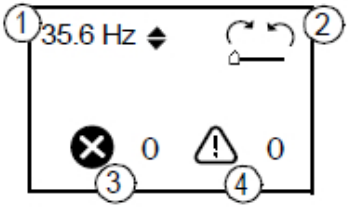	
1	**Reference value**: Speed (rpm) or frequency (Hz)
2	**Rotation direction**: Forward or reverse
3	**Faults**: Active fault code
4	**Warnings**: Active warning code

[illegible]

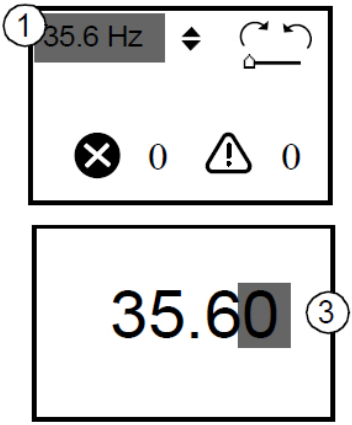	
1	[illegible]
2	[illegible]
3	[illegible]
4	[illegible]

[illegible]

[illegible]

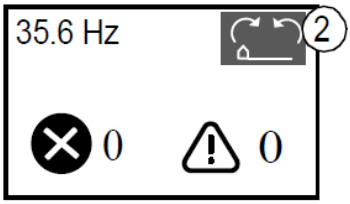

1	[illegible]
2	[illegible]

[illegible] /[illegible]

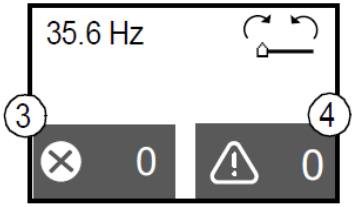

[illegible]

[illegible]

[illegible]

[illegible] 1. [illegible] 2. [illegible]	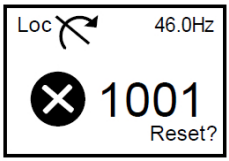

HI

For faults with aux codes, press right arrow to view the aux code.	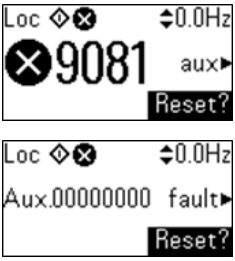

[illegible]

[illegible] 1. [illegible] 2. [illegible]	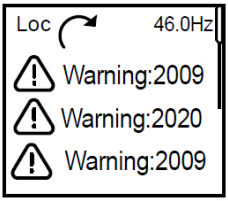

[illegible]

HI

[illegible]

[illegible]

1. [illegible]
2. [illegible]
3. [illegible]

[illegible] BIO-01 [illegible]

- [illegible] BIO-01 [illegible]
- BIO-01 [illegible]

HI

[illegible]

[illegible]	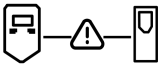
[illegible]	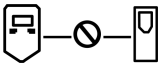

[illegible]

	[illegible]	[illegible]
	[illegible], [illegible]	[illegible]
	[illegible], [illegible]	[illegible]

[illegible]

[illegible]

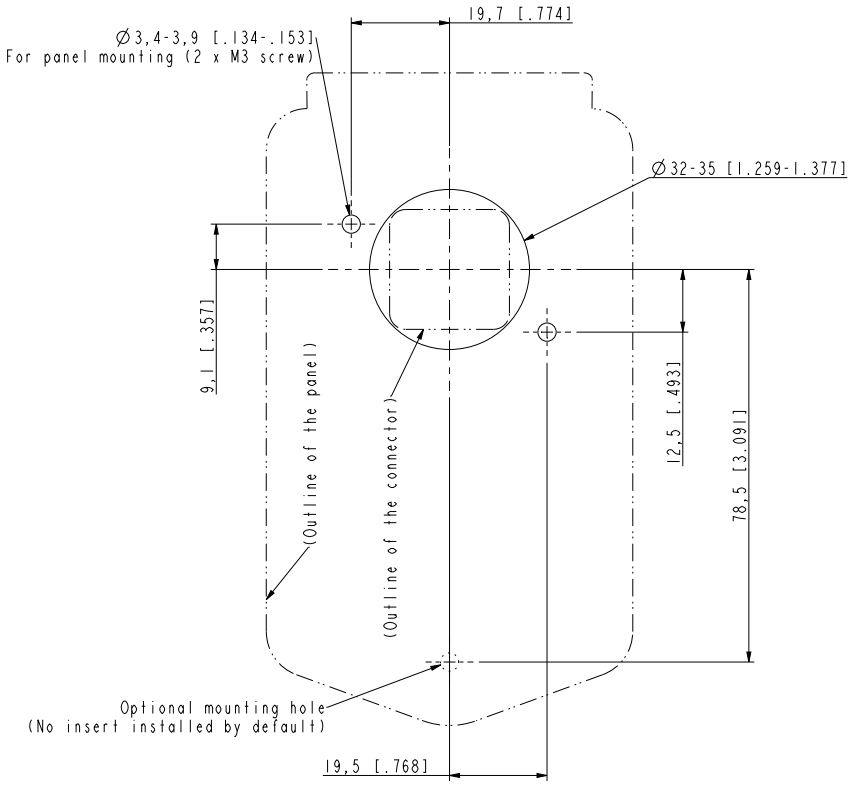

NOTE: Before proceeding check the template scale by measuring printed dimensions.
Template may not be true-to-size. Do NOT drill until measurements are verified.

पैरामीटर सूची

[illegible]	[illegible]	[illegible]	[illegible]	[illegible]
01 [illegible]				
01.01	[illegible]	-30000.00...30000.00	rpm	-
01.02	[illegible]	-30000.00...30000.00	rpm	-
01.03	[illegible]	-1000.00...1000.00	%	-
01.06	[illegible]	-500.00...500.00	Hz	-
01.07	[illegible]	0.00...30000.00	A	-
01.08	[illegible]	0.0...1000.0	%	-
01.09	[illegible]	0.0...1000.0	%	-
01.10	[illegible]	-1600.0...1600.0	%	-
01.11	DC [illegible]	0.00...2000.00	V	-
01.13	[illegible]	0...2000	V	-
01.14	[illegible]	-32768.00...32767.00	kW	-
01.15	[illegible]	-300.00...300.00	%	-
01.17	[illegible]	-32768.00...32767.00	kW or hp	-
01.18	GWh [illegible]	0...65535	GWh	-
01.19	MWh [illegible]	0...1000	MWh	-
01.20	kWh [illegible]	0...1000	kWh	-
01.24	[illegible]	0...200	%	-
01.30	[illegible]	0...400000	N·m	-
01.31	[illegible]	-40 ... 120 °C [To be translated (TP-61 TP-62 TP-57)] This parameter is applicable only for frame sizes R6 or larger.	°C or °F	0
01.50	kWh [illegible]	0.00 ... 100000.00	kWh	-
01.51	kWh [illegible]	0.00...100000.00	kWh	-

HI

[illegible]	[illegible]	[illegible]	[illegible]	[illegible]
01.52	kWh [illegible]	0.00…100000.00	kWh	-
01.53	kWh [illegible]	0.00…100000.00	kWh	-
01.54	[illegible]	-200000000.0…200000000.0	kWh	-
01.55	GWh ([illegible])	0…65535	GWh	-
01.56	MWh ([illegible])	0…1000	MWh	-
01.57	kWh ([illegible])	0…1000	kWh	-
01.58	([illegible])	-200000000.0…200000000.0	kWh	-
01.61	[illegible]	0.00 … 30000.00	rpm	-
01.62	Abs [illegible] %	0.00 … 1000.00	%	-
01.63	Abs [illegible]	0.00 … 500.00	Hz	-
01.64	Abs [illegible]	0.00 … 1600.0	%	-
01.65	Abs [illegible]	0.00 … 32767.00	kW	-
01.66	% [illegible]	0.00 … 300.00	%	-
01.68	Abs [illegible]	0.00 … 32767.00	kW or hp	-
03 [illegible]				
03.01	[illegible]	-100000.00 … 100000.00	-	0.00
03.02	[illegible]	-100000.00 … 100000.00	-	0.00
03.05	FB A 1 [illegible]	-100000.00 … 100000.00	-	0.00
03.06	FB A 2 [illegible]	-100000.00 … 100000.00	-	0.00
03.09	EFB 1 [illegible]	-30000.00 … 30000.00	-	0.00
03.10	EFB 2 [illegible]	-30000.00 … 30000.00	-	0.00
04 [illegible]				
04.01	[illegible]	0x0000...0xffff	-	0x0000
04.02	2 [illegible]	0x0000...0xffff	-	0x0000
04.03	3 [illegible]	0x0000...0xffff	-	0x0000
04.06	1 [illegible]	0x0000...0xffff	-	0x0000
04.07	2 [illegible]	0x0000...0xffff	-	0x0000
04.08	3 [illegible]	0x0000...0xffff	-	0x0000
04.11	[illegible]	0x0000...0xffff	-	0x0000

HI

[illegible]	[illegible]	[illegible]	[illegible]	[illegible]
04.12	[illegible]	0x0000...0xffff	-	0x0000
04.13	[illegible]	0x0000...0xffff	-	0x0000
04.16	[illegible]	0x0000...0xffff	-	0x0000
04.17	[illegible]	0x0000...0xffff	-	0x0000
04.18	[illegible]	0x0000...0xffff	-	0x0000
04.40	Event word 1	0x0000...0xffff	-	0b0000

Bit	[illegible]	Bit	[illegible]	Bit	[illegible]	Bit	[illegible]
0	[illegible]	1	[illegible]	2..14	[illegible]	15	[illegible]

04.41	Event word 1 bit 0 code	0x0000...0xffff	-	0x2310h
04.43	Event word 1 bit 1 code	0x0000...0xffff	-	0x3210h
04.45, ...04.47, 04.49...	...	...	...	...
04.71	Event word 1 bit 15 code	0x0000...0xffff	-	0x2330h
05 [illegible]				
05.01	[illegible]	0...65535	[illegible]	0
05.02	[illegible]	0...65535	[illegible]	0
05.03	[illegible]	0.0…429496729.5	h	0.0
05.04	[illegible]	0...65535	[illegible]	0
05.10	[illegible]	-100 … 300	°C	0
05.11	[illegible]	-40.0 … 160.0	%	0.0
05.20	[illegible]	0b0000...0b1111	-	0b0000

Bit	[illegible]	Bit	[illegible]	Bit	[illegible]
0	[illegible]	4	[illegible]	8	[illegible]
1	[illegible]	5	[illegible]	9	[illegible]
2	[illegible]	6	DC [illegible]	10...15	[illegible]
3	[illegible]	7	DC [illegible]		

05.21	[illegible]	0b0000...0b1111	-	0b0000

HI

[illegible]	[illegible]	[illegible]	[illegible]	[illegible]
	Bit [illegible]	**Bit** [illegible]	**Bit** [illegible]	
	0...9 [illegible]	10 [illegible]	11...15 [illegible]	
05.22	[illegible]	0b0000...0b1111	-	0b0000
	Bit [illegible]	**Bit** [illegible]	**Bit** [illegible]	
	0...8 [illegible]	10 [illegible]	12...15 [illegible]	
	9 kWh [illegible]	11 [illegible]		
05.80	[illegible]	-30000.00...30000.00	rpm	0.00
05.81	[illegible]	-500.00...500.00	Hz	0.00
05.82	[illegible]	0.00...2000.00	V	0.00
05.83	[illegible]	0.00...30000.00	A	0.00
05.84	[illegible]	-1600.00...1600.00	%	0.0
05.85	[illegible]	06.11 [illegible]	-	0x0000
05.86	DI [illegible]	10.02 DI [illegible]	-	0b0000
05.87	[illegible]	-40...160	°C	0
05.88	[illegible]	-30000.00...30000.00	Hz	0.00
05.99	BIO-01 DIP switch status	- [illegible] [Translation missing] This feature is not available with the standard BIO-01. For information on the availability on new BIO-01 module, contact ABB sales team.	-	-
	Bit	[illegible]		
	0	0 = OFF = DO1 on port S1, 1 = ON = AO1 on port S1		
	1	0 = OFF = DI3 on port S2 1 = ON = DO1 on port S2		
	2...5	[illegible]		
06 [illegible]				

HI

[illegible]	[illegible]	[illegible]	[illegible]	[illegible]
06.01	[illegible]	0x0000...0xffff	-	0x0000

Bit	[illegible]	Bit	[illegible]	Bit	[illegible]
0	Off1 [illegible]	6 [illegible]	[illegible]	12	[illegible]
1	Off2 [illegible]	7 [illegible]	[illegible]	13	[illegible]
2	Off3 [illegible]	8 [illegible]	1 [illegible]	14	[illegible]
3	[illegible]	9	2 [illegible]	15	[illegible]
4	[illegible]	10	[illegible]		
5	[illegible]	11	[illegible]		

06.05	AI supervision force	0b0000...0b1111	-	0b0111
06.11	[illegible]	0x0000...0xffff	-	0x0000

Bit	[illegible]	Bit	[illegible]	Bit	[illegible]
0	[illegible]	6	[illegible] -[illegible]	12	[illegible]
1	[illegible]	7	[illegible]	13	[illegible]
2	[illegible]	8	[illegible]	14	[illegible]
3	[illegible]	9	[illegible]	15	[illegible]
4	Off2 [illegible]	10 [illegible]	[illegible]		
5	Off3 [illegible]	11 [illegible]	[illegible]		

06.16	[illegible]	0b0000...0b1111	-	0b0000

Bit	[illegible]	Bit	[illegible]	Bit	[illegible]
0	[illegible]	5	[illegible]	10	Ext1 [illegible]
1	[illegible]	6	[illegible]	11 [illegible]	Ext2 [illegible]
2	DC [illegible]	7	[illegible]	12	[illegible]
3	[illegible]	8	[illegible]	13	[illegible]
4	[illegible]	9 [illegible]	[illegible]	14	[illegible]
				15	[illegible]

06.17	[illegible]	0b0000...0b111	-	0b0000

HI

[illegible]	[illegible]	[illegible]	[illegible]	[illegible]

Bit	[illegible]	Bit	[illegible]	Bit	[illegible]
0	[illegible]	5	[illegible]	11…12	[illegible]
1	[illegible]	6	[illegible]	13	[illegible]
2	[illegible]	7…8	[illegible]	14…15	[illegible]
3	[illegible]	9	[illegible]		
4	[illegible]	10	[illegible]		

06.18	[illegible]	0b0000…0xffff	-	0b0000

Bit	[illegible]	Bit	[illegible]	Bit	[illegible]
0	[illegible]	6	[illegible]	12	Off2 [illegible]
1	[illegible]	7	STO	13	Off3 [illegible]
2	SSW [illegible]	8	[illegible]	14 [illegible]	[illegible]
3	[illegible]	9	ID [illegible]	15	[illegible]
4	[illegible]	10	[illegible]		
5	[illegible]	11	Off1 [illegible]		

06.19	[illegible]	0b0000…0b1111	-	0b0000

Bit	[illegible]	Bit	[illegible]	Bit	[illegible]
0	[illegible]	2…6	[illegible]	8…15	[illegible]
1	[illegible]	7	[illegible]		

06.20	[illegible]	0b0000…0b1111	-	0b0000

Bit	[illegible]	Bit	[illegible]	Bit	[illegible]
0	1[illegible]	3	4[illegible]	6	7[illegible]
1	2[illegible]	4	5[illegible]	7…15	[illegible]
2	3[illegible]	5	6[illegible]		

06.21	3[illegible]	0b0000…0b1111	-	0b0000

Bit	[illegible]	Bit	[illegible]
0	DC [illegible]	2	[illegible]
1	[illegible]	3…15	[illegible]

HI

[illegible]	[illegible]	[illegible]	[illegible]	[illegible]
06.29	MSW [illegible]	[illegible] [0], [illegible] [1], [illegible] [2],	-	[illegible] [2]
06.30	MSW [illegible]	[illegible] [0], [illegible] [1], [illegible] [2], [illegible]	-	[illegible] [2]
06.31	MSW [illegible]	[illegible] [0], [illegible] [1], [illegible] enable [2], Other...	-	[illegible] [2]
06.32	MSW [illegible]	[illegible] [0], [illegible] [1],	-	[illegible] [0]
06.33	MSW [illegible]	[illegible] [0], [illegible] [1],	-	[illegible] [0]
07 [illegible]				
07.03	[illegible]	-	-	[illegible]
07.04	[illegible]	-	-	-
07.05	[illegible]	0.00.0.0...255.255.255.255		
07.06	[illegible]	-	-	-
07.07	[illegible]	0.00.0.0...255.255.255.255	-	0.00.0.0
07.11	CPU [illegible]	0…100	%	0
07.35	[illegible]	0x0000...0xffff	-	0x0000

Bit	[illegible]	Bit	[illegible]	Bit	[illegible]	Bit	[illegible]
0	[illegible]	4	FECA-01	8	BIO-01	12	FMBT-21
1	[illegible]	5	FPBA-01	9	RIIO-01	13	[illegible]
2	[illegible]	6	FCAN-01	10	FSCA-01	14	FPNO-21
3	FENA-21	7	[illegible]	11	FEIP-21	15	FEPL-02

07.36	[illegible]	0x0000...0xffff	-	0x0000

Bit	[illegible]	Bit	[illegible]	Bit	[illegible]	Bit	[illegible]
0	FLON-01	2	FCNA-01	4	CMOD-02	6	CHDI-01
1	FDNA-01	3	CMOD-01	5	CPTC-01	5…15	[illegible]

`0 [illegible] DI, RO [illegible]				
10.01	DI [illegible]	0b0000...0b1111	-	0b0000

HI

[illegible]	[illegible]	[illegible]	[illegible]	[illegible]
	Bit [illegible] **Bit** [illegible] **Bit** [illegible] [illegible] **Bit** 0 DI1 2 DI3 4 DI5 6…15 [illegible] 1 DI2 3 DI4 5 DI6			
10.02	DI [illegible]	[illegible]	-	0b0000
10.03	DI [illegible]	[illegible]	-	0b0000
10.04	DI [illegible]	[illegible]	-	0b0000
10.05	DI1 ON [illegible]	0.00...3000.00	s	0.00
10.06	DI1 OFF [illegible]	0.00...3000.00	s	0.00
10.07	DI2 ON [illegible]	0.00...3000.00	s	0.00
10.08	DI2 OFF [illegible]	0.00...3000.00	s	0.00
10.09	DI3 ON [illegible]	0.00...3000.00	s	0.00
10.10	DI3 OFF [illegible]	0.00...3000.00	s	0.00
10.11	DI4 ON [illegible]	0.00...3000.00	s	0.00
10.12	DI4 OFF [illegible]	0.00...3000.00	s	0.00
10.13	DI5 ON [illegible]	0.00...3000.00	s	0.00
10.14	DI5 OFF [illegible]	0.00...3000.00	s	0.00
10.15	DI6 ON [illegible]	0.00...3000.00	s	0.00
10.16	DI6 OFF [illegible]	0.00...3000.00	s	0.00
10.21	RO [illegible]	0b0000...0b1111	-	0b0000
	Bit [illegible] **Bit** [illegible] **Bit** [illegible] **Bit** [illegible] 0 RO1 1 RO2 2 RO3 3...15 [illegible]			
10.22	RO [illegible]	[illegible]	-	0b0000
10.23	RO [illegible]	[illegible]	-	0b0000

HI

[illegible]	[illegible]	[illegible]	[illegible]	[illegible]
10.24	RO1 [illegible]	0...2, 4...24, 27...35, 45...48	-	[illegible] [2]

[illegible] [0]	[illegible] [12]	Ext2 [illegible] [23]	RO/DIO [illegible] 1 [41]
[illegible] [1]	[illegible] [13]	[illegible] [24]	RO/DIO [illegible] 2 [42]
[illegible] [2]	[illegible] [14]	1 [27] [illegible]	PFC1 [45]
[illegible] [4]	[illegible] [15] (-1)	2 [28] [illegible]	PFC2 [46]
[illegible] [5]	[illegible] / [illegible]	3 [29] [illegible]	PFC3 [47]
[illegible] [6]	[illegible] [17]	[illegible] [30...32]	PFC4 [48]
[illegible] [7]	[illegible] [18]	1 [33] [illegible]	Event word 1 [53]
[illegible] [8]	[illegible] [19]	2 [34] [illegible]	[illegible] [61]
[illegible] [9]	[illegible] [20]	3 [35] [illegible]	RO/DIO [illegible] [62]
[illegible] [10]	[illegible] [21]	[illegible] [39]	Other [bit]
[illegible] [11]	[illegible] [22]	RO/DIO [illegible] 0 [40]	

10.25	RO1 [illegible]	0.0 … 3000.0	s	0
10.26	RO1 [illegible]	0.0 … 3000.0	s	0
10.27	RO2 [illegible]	10.24 RO1 [illegible]	-	[illegible] [7]
10.28	RO2 [illegible]	0.0 … 3000.0	s	0
10.29	RO2 [illegible]	0.0 … 3000.0	s	0
10.30	RO3 [illegible]	10.24 RO1 [illegible]	-	[illegible] [15] (-1)
10.31	RO3 [illegible]	0.0 … 3000.0	s	0
10.32	RO3 [illegible]	0.0 … 3000.0	s	0
10.99	RO/DIO [illegible]	0b0000...0b1111	-	0b0000

Bit	[illegible]	Bit	[illegible]	Bit	[illegible]	Bit	[illegible]
0	RO1	1	RO2	2	RO3	3...15	[illegible]

10.101	RO1 [illegible]	0...4294967000	-	-
10.102	RO2 [illegible]	0...4294967000	-	-
10.103	RO2 [illegible]	0...4294967000	-	-
11 [illegible] DIO, FI, FO [illegible]				
11.21	DI5 [illegible]	[illegible] [0], [1] [illegible]	-	[illegible] [0]
11.38	1 [illegible]	0…16000	Hz	-

HI

[illegible]	[illegible]	[illegible]	[illegible]	[illegible]
11.39	1 [illegible]	-32768.000 … 32767.000	-	-
11.42	1 [illegible]	0…16000	Hz	0
11.43	Freq in 1 Max	0…16000	Hz	16000
11.44	1 [illegible]	-32768.000 … 32767.000	-	0.000
11.45	1 [illegible]	-32768.000 … 32767.000	-	50.000
12 AI [illegible]				
12.02	AI [illegible]	0b000...0b1111	-	0b0000

Bit	[illegible]	Bit	[illegible]	Bit	[illegible]
0	AI1	1	AI2	2...15	[illegible]

12.03	AI [illegible]	0...4	-	[illegible] [0] [illegible]

[illegible] [0] [illegible]	[2] [illegible]	[illegible] [4]
[illegible] [1]	[illegible] [3]	

12.04	AI [illegible]	0b000...0b1111	-	0b0000

Bit	[illegible]	Bit	[illegible]	Bit	[illegible]
0	AI1 < [illegible]	[illegible] 2 [illegible]	AI2 < [illegible]	[illegible] 4...15	[illegible]
1	AI1 > [illegible]	[illegible] 3 [illegible]	AI2 > [illegible]	[illegible]	

12.11	AI1 [illegible]	0.000…11.000	V	0
12.12	AI1 [illegible]	-32768.000 … 32767.000	-	0
12.13	AI1 [illegible]	0.000…11.000	V	0
12.15	AI1 [illegible]	V[2], mA[10]	-	V[2]
12.16	AI1 [illegible]	0.000 … 30.000	s	0.100
12.17	AI1 [illegible]	0.000…11.000	V	0.000
12.18	AI1 [illegible]	0.000…11.000	V	10.000
12.19	AI1 [illegible]	-32768.000 … 32767.000	-	0.000
12.20	AI1 [illegible]	-32768.000 … 32767.000	-	50.000
12.21	AI2 [illegible]	0.000…22.000	mA	0.000
12.22	AI2 [illegible]	-32768.000 … 32767.000	-	0.000
12.23	AI2 [illegible]	0.000…22.000	mA	0.000

HI

[illegible]	[illegible]	[illegible]	[illegible]	[illegible]
12.25	AI2 [illegible]	V[2], mA[10]	-	mA
12.26	AI2 [illegible]	0.000 … 30.000	s	0.100
12.27	AI2 [illegible]	0.000…22.000	mA	4.000
12.28	AI2 [illegible]	0.000…22.000	mA	20.000
12.29	AI2 [illegible] AI2 [illegible]	-32768.000 … 32767.000	-	0.000
12.30	AI2 [illegible] AI2 [illegible]	-32768.000 … 32767.000	-	50.000
12.101	AI1 [illegible]	0.00...100.00	%	0.00
12.102	AI2 [illegible]	0.00...100.00	%	0.00
12.110	AI dead band	0.00...100.00	%	0.40%
13 [illegible] AO [illegible]				
13.02	AO [illegible]	0b0000…0b1111	-	0b0000

Bit	[illegible]	Bit	[illegible]	Bit	[illegible]
0	AO1	1	AO2	2...15	[illegible]

13.11	AO1 [illegible]	0.000 … 22.000	mA	-
13.12	AO1 [illegible]	0...1, 3...8, 12, 14, 16, 20, 21, 26...28, 30...32, 37, 38	-	[illegible] [

[illegible] [0]	DC [illegible] [7]	[illegible] [26]	AO1 [illegible] [37]
[illegible] [1]	[illegible] [8]	Abs [illegible] % [27]	AO2 [illegible] [38]
[illegible]	[illegible] [13] [illegible] [14]	Abs [illegible] [28]	
[illegible] [4]	PID [illegible] [16]	Abs [illegible] [30]	
[illegible] [5]	1 [illegible] [20]	[illegible] [31]	
[illegible] [6]	2 [illegible] [21]	[illegible] [32]	

13.13	AO1 [illegible]	0.000...22.000	mA	0.000
13.15	AO1 [illegible]	V[2], mA[10]	-	mA[10]
13.16	AO1 [illegible]	0.000 … 30.000	s	0.100
13.17	AO1 [illegible]	-32768.0 … 32767.0	-	0.0
13.18	AO1 [illegible]	-32768.0 … 32767.0	-	50.0
13.19	AO1 [illegible] AO1 [illegible]	0.000 … 22.000	mA	0.000
13.20	AO1 [illegible] AO1 [illegible]	0.000 … 22.000	mA	20.000
13.21	AO2 [illegible]	0.000 … 22.000	mA	0.000

HI

[illegible]	[illegible]	[illegible]	[illegible]	[illegible]
13.22	AO2 [illegible]	[illegible]	-	[illegible] [4]
13.23	AO2 [illegible]	0.000 … 22.000	mA	0.000
13.26	AO2 [illegible]	0.000 … 30.000	s	0.100
13.27	AO2 [illegible]	-32768.0 … 32767.0	-	0.0
13.28	AO2 [illegible]	-32768.0 … 32767.0	-	3.2
13.29	AO2 [illegible]	0.000 … 22.000	mA	4.000
13.30	AO2 out at AO2 src max	0.000 … 22.000	mA	20.000
13.91	AO1 [illegible]	-327.68 … 327.67	-	0.00
13.92	AO2 [illegible]	-327.68 … 327.67	-	0.00
15 I/O extension module				
15.01	Extension module type	None[0], BREL[5] [illegible] [Translation missing] BREL-01 is applicable only for frames R0...R2	-	[illegible] [0]
15.02	Detected extension module	None[0], BREL[5]	-	[illegible] [0]
15.04	RO/DO status	0000h...FFFFh	-	0000h

Bit	[illegible]	Bit	[illegible]	Bit	[illegible]
0	RO4	3	RO7	6...15	[illegible]
1	RO5	4	[illegible]		
2	RO6	5	DO1		

15.05	RO/DO force selection	0000h...FFFFh	-	0000h

Bit	[illegible]	Bit	[illegible]	Bit	[illegible]
0	RO4	3	RO7	6...15	[illegible]
1	RO5	4	[illegible]		
2	RO6	5	DO1		

15.06	RO/DO forced data	0000h...FFFFh	-	0000h

HI

[illegible]		[illegible]	[illegible]	[illegible]
	Bit / [illegible] / **Bit** / [illegible] / **Bit** / [illegible] 0 / RO4 / 3 / RO7 / 6...15 / [illegible] 1 / RO5 / 4 / [illegible] / / 2 / RO6 / 5 / DO1 / /			
15.07	RO4 source	-	-	[illegible] [0]
	[illegible] [0] / [illegible] [13] / [illegible] [27] / PFC1[45] [illegible] [1] / [illegible] [14] / [illegible] [28] / PFC2[46] [illegible] [2] / Fault (-1)[15] / [illegible] [29] / PFC3[47] Reserved[3] / [illegible] / [illegible] [16] [illegible] [30...32] / PFC4[48] [illegible] [4] / [illegible] [17] / [illegible] [33] [illegible] / PFC5[49] [illegible] [5] [illegible] / [illegible] [18] / [illegible] [34] [illegible] / PFC6[50] Magnetized[6] / [illegible] [19] / [illegible] [35] [illegible] / Reserved[51...52] Running[7] / [illegible] [20] / Reserved[36...38] / Event word 1[53] [illegible] [8] / [illegible] [21] / [illegible] [39] / [illegible] [61] [illegible] [9] [illegible] / [illegible] [22] / RO/DIO [illegible] [40] / RO/DIO [illegible] [62] [illegible] [10] / Ext2 [illegible] [23] / RO/DIO [illegible] [41] / [illegible] ... [illegible] [11] / [illegible] [24] / RO/DIO [illegible] [42] [illegible] [illegible] [12] / Reserved[25...26] / Reserved[43..44] /			
15.08	RO4 ON delay	0.0 … 3000.0	s	0.0
15.09	RO4 OFF delay	0.0 … 3000.0	s	0.0
15.10	RO5 source	See parameter 15.07 RO4 source	-	[illegible] [0]
15.11	RO5 ON delay	0.0 … 3000.0	s	0.0
15.12	RO5 OFF delay	0.0 … 3000.0	s	0.0
15.13	RO6 source	See parameter 15.07 RO4 source	-	[illegible] [0]
15.14	RO6 ON delay	0.0 … 3000.0	s	0.0
15.15	RO6 OFF delay	0.0 … 3000.0	s	0.0
15.16	RO7 source	See parameter 15.07 RO4 source	-	[illegible] [0]

HI

[illegible]	[illegible]	[illegible]	[illegible]	[illegible]
15.17	RO7 ON delay	0.0 … 3000.0	s	0.0
15.18	RO7 OFF delay	0.0 … 3000.0	s	0.0
19 [illegible]				
19.01	[illegible]	1, 2, 10, 20	-	(Hz)[10] [illegible]

[illegible] [1]	[illegible] [4]	[illegible] [7...9]
[illegible] [2]	[illegible] [5]	(Hz)[10] [illegible]
[illegible] [3]	[illegible] [6]	mag[20]

19.11	Ext1/Ext2 [illegible]	0...8, 19...21, 25...27, 32...34	-	EXT1[0]

EXT1[0]	DI2[4]	DI6[8]	[illegible][25] [illegible]	FBA A [illegible][33]
EXT2[1]	DI3[5]	[illegible][19] [illegible]	[illegible][26] [illegible]	EFB [illegible][35]
FBA A MCW [illegible] 11[2]	DI4[6]	[illegible][20] [illegible]	[illegible][27] [illegible]	[illegible] ...
DI1[3]	DI5[7]	[illegible][21] [illegible]	EFB MCW [illegible][32]	

19.12	Ext1 [illegible]	[illegible][31], [illegible][34]	[illegible]	[illegible] [2]
19.14	Ext2 [illegible]	[illegible] Ext1 [illegible]	-	[illegible] [2]
19.16	[illegible]	[illegible][0], [illegible] [1]	-	[illegible] [0]
19.17	[illegible]	[illegible][0], [illegible]	-	[illegible] [0]
20 [illegible] / [illegible] / [illegible]				
20.01	Ext1 [illegible]	0...6, 11, 12, 14	-	In1 [illegible] In2 [illegible] [2]

[illegible][0]	In1P [illegible] In2 [illegible];[4]	A[12] [illegible]
In1 [illegible] [1]	In1P [illegible] In2 [illegible] In3 [illegible];[illegible] [5]	[illegible][14]
In1 [illegible] In2 [illegible] [2]	In1P [illegible] In2 [illegible] In3 [illegible];[illegible] [6]	
In1 [illegible] In2 [illegible];[illegible] [3]	[illegible][11] [illegible]	

20.02	Ext1 [illegible]	[illegible][0], [illegible] [1]	-	[illegible] [1]
20.03	Ext1 in1 [illegible]	0...7, 18...20, 24...26	-	DI1[2]

[illegible][0]	DI2[3]	DI5[6]	[illegible][19] [illegible]	[illegible][25] [illegible]
[illegible][1]	DI3[4]	DI6[7]	[illegible][20] [illegible]	[illegible][26] [illegible]
DI1[2]	DI4[5]	[illegible][18] [illegible]	[illegible][24] [illegible]	[illegible] ...

HI

[illegible]	[illegible]	[illegible]	[illegible]	[illegible]
20.04	Ext1 in2 [illegible]	[illegible]	-	DI2[3]
20.05	Ext1 in3 [illegible]	[illegible]	-	[illegible][0]
20.06	Ext2 [illegible]	0...6, 11, 12, 14	-	[illegible][0]

[illegible][0]	In1 [illegible]	In1P [illegible]	[illegible][6] [illegible][14]
In1 [illegible] [1]	In1P [illegible]	[illegible][11]	[illegible] ...
In1 [illegible] [2]	In1P [illegible]	[illegible]	

20.07	Ext2 [illegible]	[illegible][0], [illegible] [1]	-	[illegible] [1]
20.08	1 [illegible]	[illegible]	-	[illegible][0]
20.09	Ext2 in2 [illegible]	[illegible]	-	[illegible][0]
20.10	Ext2 in3 [illegible]	[illegible]	-	[illegible][0]
20.11	[illegible]	Coast[0], Ramp[1], Torque limit[2]	-	[illegible] [0]
20.12	[illegible]	0...7, 18...20, 24...26, 30, 32	-	[illegible] [1]

[illegible][0]	DI3[4]	[illegible]	[illegible]	[illegible] ...
[illegible] [1]	DI4[5]	[illegible]	[illegible]	
DI1[2]	DI5[6]	[illegible]	FBA A MCW [illegible] 3[30]	
DI2[3]	DI6[7]	[illegible]	EFB MCW [illegible]	

20.19	[illegible]	[illegible]	-	[illegible] [1]
20.21	[illegible]	[illegible][0], [illegible][2]	-	[illegible] [2]
20.22	[illegible]	[illegible]	-	[illegible] [1]
20.25	[illegible]	[illegible]	-	[illegible][0]
20.26	[illegible]	[illegible]	-	[illegible][0]
20.27	[illegible]	[illegible]	-	20.28Not selected[0]
20.28	Remote to local action	Keep running[0]. Stop[1]	-	Keep running[0]
20.30	Enable signal warning function	000h...FFFh		0000h

Bit	[illegible]	Bit	[illegible]	Bit	[illegible]
0	[illegible]	1	[illegible]	3...15	[illegible]

HI

[illegible]	[illegible]	[illegible]	[illegible]
21 [illegible] / [illegible]			
21.01	[illegible]	[illegible] [0], [illegible] [1], Automatic[2]	-	[illegible] [2]
21.02	[illegible]	0…10000	ms	500
21.03	[illegible]	Coast[0], Ramp[1], Torque limit[2]	-	[illegible] [0]
21.04	[illegible]	Ramp stop (Off1)[0], Coast stop (Off2)[1] Eme ramp stop (Off3)[2]	-	[illegible] (Off1)[1]
21.05	[illegible]	0, 1, 3...8	-	[illegible] (DI1)[1] [illegible]

[illegible] (DI1)[3]	DI1[0]	DI3[5]	DI5[7]	[illegible] ...
[illegible] (DI2)[1]	DI2[4]	DI4[6]	DI6[8]	

21.06	[illegible]	0…30000	rpm	30.00
21.07	[illegible]	0…30000	ms	0
21.08	DC [illegible]	0b0000…0b1111	-	0b0000

Bit	[illegible]	Bit	[illegible]	Bit	[illegible]
0	DC [illegible]	1	[illegible]	2…15	[illegible]

21.09	DC [illegible]	0.00 … 1000.00	rpm	5.00
21.10	DC [illegible]	0.0 … 100.0	%	30.0
21.11	[illegible]	0…3000	s	0
21.14	[illegible]	0...13	-	[illegible] [0]

[illegible] [0]	DI2[3]	DI5[6]	2[9] [illegible]	2[12] [illegible]
On[1]	DI3[4]	DI6[7]	3[10] [illegible]	3[13] [illegible]
DI1[2]	DI4[5]	1[8] [illegible]	1[11] [illegible]	[illegible] ...

21.15	[illegible]	10...3000	s	60
21.16	[illegible] -[illegible]	0.0 … 30.0	%	0.0
21.18	[illegible]	0.0…10.0	s	10.0
21.19	[illegible]	0...4	-	[illegible]

[illegible] [0]	[illegible] [2]	[illegible] [4]	[illegible] [6]
[illegible] [1]	[illegible] [3]	[illegible] [5]	

HI

[illegible]	[illegible]	[illegible]	[illegible]	[illegible]
21.21	DC [illegible]	0.00…1000.00	Hz	5.00
21.22	[illegible]	0.00…60.00	s	0.00
21.26	[illegible]	15.0…300.0	%	100.0
21.27	Torque boost time	0.0...60.0	s	20.0
21.30	[illegible]	0...3	-	[illegible] [0]
	[illegible] [0] / [illegible] [1] / [illegible] [2] / [illegible] [3]			
21.31	[illegible]	0.00…1000.00	s	0.00
21.32	[illegible]	0…100	%	10
21.34	[illegible]	[illegible] [0], [1]	-	[illegible] [0]
22 [illegible]				
22.01	Speed reference unlimited	-30000.00...30000.00	rpm	0.00
22.11	Ext1 [illegible] 1	0...2, 4, 5, 8, 9, 15...19	-	AI1 [illegible] [1]
	[illegible] [0] / FB A [illegible] [1] / EFB [illegible] [4] / [illegible] [9] / [illegible] [17] / [illegible] ... / AI1 [illegible] [2] / FB A [illegible] [5] / [illegible] [10] / [illegible] [18] / AI2 [illegible] [3] / EFB [illegible] [6] / PID [illegible] [8] / [illegible] [19]			
22.12	Ext1 [illegible] 2	22.11 [illegible]	-	[illegible] [0]
22.13	Ext1 [illegible]	0...5	-	[illegible] 1[0]
	[illegible] 1[0] / [illegible] 1 2)[2] / [illegible] 1, 2)[4] / [illegible] 1 2)[1] / Mul (ref1 × ref2)[3] / [illegible] 1, 2)[5]			
22.18	Ext2 [illegible] 1	22.11 [illegible]	-	[illegible] [0]
22.19	Ext2 speed ref2	22.11 [illegible]	-	[illegible] [0]
22.20	Ext2 [illegible]	22.11 Ext1 [illegible]	-	[illegible] 1[0]
22.21	[illegible]	0b0000…0b1111	-	0b0001
	Bit / [illegible] / **Bit** / [illegible] / **Bit** / [illegible] 0 / [illegible] / 1 / [illegible] / 2...15 / [illegible]			

HI

[illegible]	[illegible]	[illegible]	[illegible]	[illegible]
22.22	[illegible]	0...7, 18...20, 24...26	-	DI3[4]

[illegible][0]	DI2[3]	DI5[6]	[illegible][19]	[illegible][25]
[illegible][1]	DI3[4]	DI6[7]	[illegible][20]	[illegible][26]
DI1[2]	DI4[5]	[illegible][18]	[illegible][24]	[illegible] ...

22.23	[illegible]	[illegible]	-	DI4[5]
22.24	[illegible]	[illegible]	-	[illegible][0]
22.26	[illegible]	-30000.00 … 30000.00	rpm	300.00
22.27	[illegible]	-30000.00 … 30000.00	rpm	600.00
22.28	[illegible]	-30000.00 … 30000.00	rpm	900.00
22.29	[illegible]	-30000.00 … 30000.00	rpm	1200.00
22.30	[illegible]	-30000.00 … 30000.00	rpm	1500.00
22.31	[illegible]	-30000.00 … 30000.00	rpm	2400.00
22.32	[illegible]	-30000.00 … 30000.00	rpm	3000.00
22.41	[illegible]	-30000.00 … 30000.00	rpm	0.00
22.42	[illegible]	-30000.00 … 30000.00	rpm	0.00
22.43	[illegible]	-30000.00 … 30000.00	rpm	0.00
22.51	[illegible]	0b0000…0b1111	-	0b0000

Bit	[illegible]	Bit	[illegible]	Bit	[illegible]
0	[illegible]	1	[illegible]	2...15	[illegible]

22.52	[illegible]	-30000.00 … 30000.00	rpm	0.00
22.53	[illegible]	-30000.00 … 30000.00	rpm	0.00
22.54	[illegible]	-30000.00 … 30000.00	rpm	0.00
22.55	[illegible]	-30000.00 … 30000.00	rpm	0.00
22.56	[illegible]	-30000.00 … 30000.00	rpm	0.00
22.57	[illegible]	-30000.00 … 30000.00	rpm	0.00
22.70	Motor potentiometer reference enable	Not selected[0], Selected[1], While running[2]	-	[illegible] [1]
22.71	[illegible]	0...4	-	[illegible] [0]

HI

[illegible]	[illegible]	[illegible]	[illegible]
	[illegible] [0]	[illegible] [2]	Enabled (resume/init to Actual[4]
	[illegible] [1]	[illegible] [3]	
22.72	[illegible]	-32768.00 … 32767.00	-	0.00
22.73	[illegible]	0...7, 18...20, 24...26	-	[illegible] [0]
	[illegible] [0]	DI2[3]	DI5[6]	[illegible] [19]	[illegible] [25] [illegible]
	[illegible] [1]	DI3[4]	DI6[7]	[illegible] [20]	[illegible] [26] [illegible]
	DI1[2]	DI4[5]	[illegible] [18]	[illegible] [24] [illegible]	[illegible] ...
22.74	[illegible]	[illegible] 73 [illegible]	-	[illegible] [0]
22.76	[illegible]	-32768.00 … 32767.00	-	-50.00
22.77	[illegible]	-32768.00 … 32767.00	-	50.00
22.78	[illegible]	0.0...3600.0	s	40.0
22.79	[illegible]	0.0...3600.0	s	40.0
22.80	[illegible]	-32768.00 … 32767.00	-	0.00
22.86	Speed reference actual 6	-30000.00...30000.00	rpm	0.00
22.87	Speed reference actual 7	-30000.00...30000.00	rpm	0.00
23 [illegible]				
23.01	[illegible]	-30000.00 … 30000.00	rpm	0.00
23.02	[illegible]	-30000.00 … 30000.00	rpm	0.00
23.11	[illegible]	0...7, 20	-	DI5[6]
	[illegible] [0]	DI2[3]	DI5[6]	EFB DCU CW bit 10[20]
	[illegible] [1]	DI3[4]	DI6[7]	[illegible]
	DI1[2]	DI4[5]	FBA A[18]	
23.12	[illegible]	0.000 …1800.000	s	20.000
23.13	[illegible]	0.000 …1800.000	s	20.000
23.14	[illegible]	0.000 …1800.000	s	60.000
23.15	[illegible]	0.000 …1800.000	s	60.000
23.20	[illegible]	0.000 …1800.000	s	60.000

HI

[illegible]	[illegible]	[illegible]	[illegible]	[illegible]
23.21	[illegible]	0.000 …1800.000	s	60.000
23.23	[illegible]	0.000 …1800.000	s	3.000
23.28	[illegible]	[illegible][0], [illegible] [1]	-	[illegible] [0]
23.29	[illegible]	2…30000	ms	50
23.32	[illegible]1 [illegible]	0.000...1800.000	s	0.000
23.33	[illegible]2 [illegible]	0.000...1800.000	s	0.000
24 Speed reference conditioning				
24.01	Used speed reference	-30000.00…30000.00	rpm	0.00
24.02	Used speed feedback	-30000.00…30000.00	rpm	0.00
24.03	Speed error filtered	-30000.00…30000.00	rpm	0.00
24.12	Speed error filter time	0…10000	ms	0
25 [illegible]				
25.01	[illegible]	-1600.0 … 1600.0	%	0.0
25.02	[illegible]	0.00 … 250.00	-	5.00
25.03	[illegible]	0.00 … 1000.00	s	2.50
25.04	[illegible]	0.000 … 10.000	s	0.000
25.05	[illegible]	0…10000	ms	8
25.06	[illegible]	0.00 … 1000.00	s	0.00
25.07	[illegible]	0.0 … 1000.0	ms	8.0
25.30	[illegible]	[illegible][0], [illegible] [1]	-	[illegible] [1]
25.33	Speed controller autotune	[illegible][0], [illegible] [1]	-	[illegible] [0]
25.34	Speed controller autotune mode	Smooth[0], Normal[1], Tight[2]	-	[illegible] [1]
25.37	Mechanical time constant	0.00...1000.00	s	0.00
25.38	Autotune torque step	0.00...100.00	%	10.00
25.39	Autotune speed step	0.00...100.00	%	10.00
25.40	Autotune repeat times	1...10	-	10
25.53	[illegible]	-30000.0 … 30000.0	%	0.0
25.54	[illegible]	-30000.0 … 30000.0	%	0.0
25.55	[illegible]	-30000.0 … 30000.0	%	0.0
25.56	[illegible]	-30000.0 … 30000.0	%	0.0

HI

[illegible]	[illegible]	[illegible]	[illegible]	[illegible]
26 [illegible]				
26.01	TC [illegible]	-1600.0…1600.0	%	-
26.02	[illegible]	-1600.0…1600.0	%	-
26.08	[illegible]	-1000.0…0.0	%	-300.0%
26.09	[illegible]	0.0…1000.0	%	300.0%
26.11	[illegible] 1	-	-	[illegible] [0]

[illegible] [0]	FB A [illegible]	EFB[4] [illegible]	[illegible][9] [illegible][17]	[illegible] …
AI1 [illegible]	FB A [illegible]	[illegible][5] [illegible]	[illegible][10] [illegible][18]	
AI2 [illegible]	EFB[3] [illegible]	PID[6]	[illegible][11] [illegible][19]	

26.12	[illegible] 2	26.11 [illegible] 1	-	[illegible] [0]
26.13	[illegible] 1	0…5	-	[illegible] 1[0]

[illegible] 1[0]	[illegible] 1, 2)[2]	[illegible] 1, 2)[4]
[illegible] 1, 2)[1]	Mul (ref1 × ref2)[3]	[illegible] 1, 2)[5]

26.14	ref1/2 [illegible]	0…8	-	1[0] [illegible]

1[0] [illegible]	DI1[3]	DI4[6]	[illegible] …
2[1] [illegible]	DI2[4]	DI5[7]	
Ext1/Ext2 [illegible]	DI3[5]	DI6[8]	

26.17	[illegible]	0.000…30.000	s	0.000
26.18	[illegible]	0.000…60.000	s	0.000
26.19	[illegible]	0.000…60.000	s	0.000
26.20	Torque reversal	0…13	-	[illegible] [0]

[illegible] [0]	DI2[3]	DI5[6]	[illegible][9] [illegible]	Supervision 2[12]
[illegible] [1]	DI3[4]	DI6[7]	[illegible][10] [illegible]	Supervision 3[13]
DI1[2]	DI4[5]	Timed function [8]	Supervision 1[11]	[illegible] …

26.70	1 [illegible]	-1600.0…1600.0	-	-
26.71	2 [illegible]	-1600.0…1600.0	-	-

HI

[illegible]	[illegible]	[illegible]	[illegible]	[illegible]
26.72	[illegible]	-1600.0…1600.0	-	-
26.73	[illegible]	-1600.0…1600.0	-	-
26.74	[illegible]	-1600.0…1600.0	-	-
26.75	[illegible]	-1600.0…1600.0	-	-
26.76	Torque reference act6	-1600.0…1600.0	-	-
26.81	[illegible]	0.0...10000.0	-	5.0
26.82	[illegible]	0.0...10.0	s	2.0
28 [illegible]				
28.01	[illegible]	-500.00 … 500.00	Hz	0.00
28.02	[illegible]	-500.00 … 500.00	Hz	0.00
28.11	Ext1 [illegible] 1 [illegible]	0...2, 4, 5, 8, 9, 15...19	-	AI scaled[1]

[illegible] [0]	FB A [illegible]	EFB [illegible]	[illegible] [17]	[illegible] ...
AI1 [illegible]	FB A [illegible]	[illegible]	[illegible]	
AI2 [illegible]	EFB [illegible]	PID [illegible]	[illegible]	

28.12	Ext1 [illegible] 2 [illegible]	28.11 Ext1 [illegible]	- [illegible]	[illegible] [0]
28.13	Ext1 [illegible]	0...5	-	[illegible] 1[0]

[illegible] 1[0]	[illegible] 1 2)[2]	[illegible] 1, 2)[4]
[illegible] 1 2)[1]	Mul (ref1 × ref2)[3]	[illegible] 1, 2)[5]

28.15	Ext2 [illegible] 1 [illegible]	28.11 Ext1 [illegible]	- [illegible]	[illegible] [0]
28.16	Ext2 [illegible] 2 [illegible]	28.11 Ext1 [illegible]	- [illegible]	[illegible] [0]
28.17	Ext2 [illegible]	28.13 Ext1 [illegible]	- [illegible]	[illegible] 1[0]
28.21	[illegible]	0b0000…0b1111	-	0b0001

Bit	[illegible]	Bit	[illegible]			Bit	[illegible]
0	[illegible]	1 [illegible]	[illegible]	2	Frequency step	3...15	[illegible]

28.22	[illegible]	0...7, 18...20, 24...26	-	DI3[4]

HI

[illegible]		[illegible]	[illegible]	[illegible]
	[illegible] [0]	DI2[3]	DI5[6]	[illegible] [19] [illegible] [25] [illegible]
	[illegible] [1]	DI3[4]	DI6[7]	[illegible] [20] [illegible] [26] [illegible]
	DI1[2]	DI4[5]	[illegible] [18] [illegible] [24] [illegible] ...	
28.23	[illegible]	[illegible]	[illegible]	DI4[4]
28.24	[illegible]	[illegible]	[illegible]	[illegible] [0]
28.26	[illegible]	-500.00 … 500.00	Hz	5.00
28.27	[illegible]	-500.00 … 500.00	Hz	10.00
28.28	[illegible]	-500.00 … 500.00	Hz	15.00
28.29	[illegible]	-500.00 … 500.00	Hz	20.00
28.30	[illegible]	-500.00 … 500.00	Hz	25.00
28.31	[illegible]	-500.00 … 500.00	Hz	40.00
28.32	[illegible]	-500.00 … 500.00	Hz	50.00
28.41	[illegible]	-500.00 … 500.00	Hz	0.00
28.42	Jogging 1 frequency ref	-500.00 … 500.00	Hz	0.00
28.43	Jogging 2 frequency ref	-500.00 … 500.00	Hz	0.00
28.51	[illegible]	0b0000…0b1111	-	0b0000

Bit	[illegible]	Bit	[illegible]	Bit	[illegible]
0	[illegible]	1	[illegible]	2...15	[illegible]

28.52	[illegible]	-500.00 … 500.00	Hz	0.00
28.53	[illegible]	-500.00 … 500.00	Hz	0.00
28.54	[illegible]	-500.00 … 500.00	Hz	0.00
28.55	[illegible]	-500.00 … 500.00	Hz	0.00
28.56	[illegible]	-500.00 … 500.00	Hz	0.00
28.57	[illegible]	-500.00 … 500.00	Hz	0.00
28.71	[illegible]	0...7, 20	-	DI5

[illegible] [0]	[illegible] DI2[3]	DI5[6]	EFB DCU CW bit 10[20]
[illegible] [1]	[illegible] DI3[4]	DI6[7]	[illegible] ...
DI1[2]	DI4[5]	FBA A [18]	

HI

[illegible]	[illegible]	[illegible]	[illegible]	[illegible]
28.72	[illegible]	0.000 …1800.000	s	20.000
28.73	[illegible]	0.000 …1800.000	s	20.000
28.74	[illegible]	0.000 …1800.000	s	60.000
28.75	[illegible]	0.000 …1800.000	s	60.000
28.76	[illegible]	0...7	-	[illegible] [1]

[illegible]	[illegible]	DI1[2]	DI2[3]	DI3[4]	DI4[5]	DI5[6]	DI6[7]	[illegible]

...

28.82	[illegible]	0.000...1800.000	s	0.000
28.83	[illegible]	0.000...1800.000	s	0.000
28.92	[illegible]	-500.00 … 500.00	Hz	0.00
28.96	[illegible]	-500.00 … 500.00	Hz	0.00
28.97	[illegible]	-500.00 … 500.00	Hz	0.00
30 [illegible]				
30.01	[illegible]	0b0000…0b1111	-	0b0000

Bit	[illegible]	Bit	[illegible]	Bit	[illegible]
0	[illegible]	5	Tlim [illegible]	9	[illegible]
1…2	[illegible]	6	Tlim [illegible]	10	[illegible]
3	[illegible]	7	[illegible]	11...15	[illegible]
4	[illegible]	8	[illegible]		

30.02	[illegible]	0b0000…0b1111	-	0b0000

Bit	[illegible]	Bit	[illegible]	Bit	[illegible]	Bit	[illegible]
0	[illegible]	4	[illegible]	8	[illegible]	11	IGBT [illegible]
1	[illegible]	5	[illegible]	9	[illegible]	12	IGBT [illegible]
2	[illegible]	6	[illegible]	10	[illegible]	13…15	[illegible]
3	[illegible]	7	[illegible]	11	IGBT [illegible]		
* [illegible]							

30.09	[illegible]	0...120	s	10.00
30.10	[illegible]	[illegible] [0], [illegible] [21],	-	[illegible] [0] [illegible]
30.11	[illegible]	-30000.00 … 30000.00	rpm	-1500.00

HI

[illegible]	[illegible]	[illegible]	[illegible]	[illegible]
30.12	[illegible]	-30000.00 … 30000.00	rpm	1500.00
30.13	[illegible]	-500.00 … 500.00	Hz	-50.00
30.14	[illegible]	-500.00 … 500.00	Hz	50.00
30.17	[illegible]	0.00 … 3.24	A	2.92
30.18	[illegible]	-	-	Toque limit set 1[0]
	[illegible] [0] DI1[2] DI3[4] DI5[6] [illegible] [8]...[10] … [illegible] [1] DI2[3] DI4[5] DI6[7] EFB[11]			
30.19	[illegible]	-1600.0 … 0.0	%	-300.0
30.20	[illegible]	0.0 … 1600.0	%	300.0
30.21	[illegible]	-	-	[illegible]
	[illegible] [0] AI1 [illegible] AI2 [illegible] [1] [illegible] [3]...[14] [illegible] PID[15] [illegible] [16] [illegible] …			
30.22	[illegible]	-	-	[illegible]
	[illegible] [0] AI1 [illegible] AI2 [illegible] [1] [illegible] [3]...[14] [illegible] PID[15] [illegible] [16] [illegible] …			
30.23	[illegible]	-1600.0 … 0.0	%	-300.0
30.24	[illegible]	0.0 … 1600.0	%	300.0
30.26	Power motoring limit	0.00…600.00	%	300.00
30.27	Power generating limit	-600.00…0.00	%	-300.00
30.30	[illegible]	[illegible] [0] [1]	-	[illegible] [1]
30.31	[illegible]	[illegible] [0] [1]	-	[illegible] [1]
30.35	[illegible]	[illegible] [0] [1]	-	[illegible] [1]
30.36	[illegible]	0...10	-	[illegible] [0]
	[illegible] [0] Ext2 [illegible] [3] DI2[6] DI4[8] DI6[10] [illegible] [1] [illegible] [4] DI3[7] DI5[9] [illegible] … Ext1 [illegible] [2] DI1[5]			
30.37	[illegible]	0...2, 11	-	[illegible] [11]
	[illegible] [0] AI1 [illegible] AI2 [illegible] [1] [illegible] [2] [illegible] [12] [illegible] …			

HI

[illegible]	[illegible]	[illegible]	[illegible]
30.38	[illegible]	0...2, 12	-	[illegible] [12]

[illegible] [0]	AI1 [illegible]	AI2 [illegible]	[illegible] [12]	[illegible] ...

31 [illegible]				
31.01	[illegible]	0, 1, 3...8	-	[illegible] [1] [illegible]

[illegible]	[illegible] [1]	[illegible] [3]	DI2[4]	DI3[5]	DI4[6]	DI5[7]	DI6[8]

31.02	[illegible]	[illegible] [0], [illegible] [1]	-	[illegible] [0]
31.03	[illegible]	[illegible]	-	[illegible] [1] [illegible]
31.04	[illegible]	[illegible] [0], [illegible] [1]	-	[illegible] [0]
31.05	[illegible]	[illegible]	-	[illegible] [1] [illegible]
31.06	[illegible]	[illegible] [0], [illegible] [1]	-	[illegible] [0]
31.07	[illegible]	[illegible]	-	[illegible] [1] [illegible]
31.08	[illegible]	[illegible] [0], [illegible] [1]	-	[illegible] [0]
31.09	[illegible]	[illegible]	-	[illegible] [1] [illegible]
31.10	[illegible]	[illegible] [0], [illegible] [1]	-	[illegible] [0]
31.11	[illegible]	-	-	[illegible] [0]

[illegible] [0]	DI3[4]	[illegible] [18]	[illegible] [25] [illegible]	[illegible] ...
[illegible] [1]	DI4[5]	[illegible] [19]	[illegible] [26] [illegible]	
DI1[2]	DI5[6]	[illegible] [20]	FBA A MCW bit 7[30]	
DI2[3]	DI6[7]	[illegible] [24] [illegible]	EFB MCW bit 7[32]	

31.12	Autoreset selection	0x0000…0xffff	-	0x0000

Bit	[illegible]	Bit	[illegible]	Bit	[illegible]
0	[illegible]	6	EarthFault	13	[illegible]
1	[illegible]	7	Shortcircuit	14	[illegible]
2	[illegible]	8..9	[illegible]	15	[illegible]
3	AI [illegible]	10	[illegible]		
4	[illegible]	11	[illegible]		
5	OverFrequency	12	[illegible]		

HI

[illegible]	[illegible]	[illegible]	[illegible]	[illegible]
31.13	[illegible]	0x0000...0xffff	-	0x0000
31.14	[illegible]	0...5	-	0
31.15	[illegible]	1.0 ... 600.0	s	30.0
31.16	[illegible]	0.0 ... 120.0	s	0.0
31.19	[illegible]	[illegible] [0], [illegible] [1]	-	[illegible] [1]
31.20	[illegible]	[illegible] [0], [illegible] [1], [illegible] [2],	-	[illegible] [2]
31.21	Supply phase loss	[illegible] [0], [illegible] [1]	-	[illegible] [1]
31.22	STO [illegible] / [illegible]	Supply phase loss	-	[illegible] [0] [illegible] / [illegible]
	[illegible] / [illegible] [0]	[illegible] / [illegible] [1]	[illegible] / [illegible] [2]	
	[illegible] / [illegible]	[illegible] [4] [illegible]	[illegible] [5] [illegible]	
31.23	[illegible]	[illegible] [0], [illegible] [1]	-	[illegible] [1]
31.24	[illegible]	[illegible] [0], [illegible] [1], [illegible] [2],	-	[illegible] [0] [illegible]
31.25	[illegible]	0.0 ... 1600.0	%	200.0
31.26	[illegible]	0.00 ... 10000.00	rpm	150.00
31.27	[illegible]	0.00 ... 1000.00	Hz	15.00
31.28	[illegible]	0...3600	s	20
31.30	[illegible]	0.00 ... 10000.00	rpm	500.00
31.31	[illegible]	0.00 ... 10000.00	Hz	15.00
31.35	Main fault function	Fault[0], Warning[1], No action[2]	-	[illegible] [1]
31.36	Aux fan fault function	Fault[0], Warning[1], No action[2] [illegible] [Translation missing] This parameter is only applicable for frames R3 or larger.	-	[illegible] [1]
31.40	Disable warning messages	000h...FFFh	-	0000h

HI

[illegible]	[illegible]	[illegible]	[illegible]

Bit	[illegible]	Bit	[illegible]
0	[illegible]	5	[illegible]
1	DC [illegible]	6	[illegible]
2...4	[illegible]	7...15	[illegible]

32 [illegible]				
32.01	[illegible]	0b0000…0b1111	-	0b0000

Bit	[illegible]	Bit	[illegible]	Bit	[illegible]
0	1 [illegible]	3	4 [illegible]	6...15	[illegible]
1	2 [illegible]	4	5 [illegible]		
2	3 [illegible]	5	6 [illegible]		

32.05	1 [illegible]	0...7	-	[illegible] [0]

[illegible] [0]	[illegible] [2]	[illegible] [4]	[illegible] [6]
[illegible] [1]	[illegible] [3]	[illegible] [5]	[illegible] [7]
Low falling[8]	High rising[9]		

32.06	1 [illegible]	[illegible] [0], [illegible] [1], [illegible] [3]	-[illegible] [2],	[illegible] [0] [illegible]
32.07	1 [illegible]	0, 1, 3, 4, 6...10, 23...27	-	[illegible] [3]

[illegible] [0]	[illegible] [4]	[illegible] [8]	[illegible] [23]	PID [illegible] [26]
[illegible] [1]	[illegible] [6]	AI1[9]	PID [illegible] [24]	PID [illegible] [27]
[illegible]	DC [illegible] [3] [illegible]	AI2[10]	PID [illegible] [25]	[illegible] ...

32.08	1 [illegible]	0.000 … 30.000	s	0.000
32.09	1 [illegible]	-21474836.00… 21474836.00	-	0.00
32.10	1 [illegible]	-21474836.00… 21474836.00	-	0.00
32.11	1 [illegible]	0.00...100000.00	-	0.00
32.15	2 [illegible]	32.05 [illegible]	-	[illegible] [0]
32.16	2 [illegible]	[illegible] [0], [illegible] [1], [illegible] [3]	-[illegible] [2],	[illegible] [0] [illegible]
32.17	2 [illegible]	32.07 [illegible]	-	[illegible] [4]

HI

[illegible]	[illegible]	[illegible]	[illegible]	[illegible]
32.18	[illegible]	0.000…30.000	s	0.000
32.19	[illegible]	-21474836.00 … 21474836.00	-	0.00
32.20	[illegible]	-21474836.00 … 21474836.00	-	0.00
32.21	[illegible]	0.00...100000.00	-	0.00
32.25	[illegible]	[illegible]	-	[illegible] [0]
32.26	[illegible]	[illegible] [0], [illegible] [1], [illegible] -[illegible] [2], [illegible] [0] [illegible]		
32.27	[illegible]	[illegible]	-	[illegible] [6]
32.28	[illegible]	0.000 … 30.000	s	0.000
32.29	[illegible]	-21474830.00… 21474830.00	-	0.00
32.30	[illegible]	-21474836.00… 21474836.00	-	0.00
32.31	[illegible]	0.00...100000.00	-	0.00
32.35	[illegible]	[illegible]	-	[illegible] [0]
32.36	[illegible]	[illegible] [0], [illegible] [1], [illegible] -[illegible] [2], [illegible] [0] [illegible]		
32.37	[illegible]	[illegible]	-	[illegible] [0]
32.38	[illegible]	0.000 … 30.000	s	0.000
32.39	[illegible]	-21474836.00… 21474836.00	-	0.00
32.40	[illegible]	-21474836.00 … 21474836.00	-	0.00
32.41	[illegible]	0.00...100000.00	-	0.00
32.45	[illegible]	[illegible]	-	[illegible] [0]
32.46	[illegible]	[illegible] [0], [illegible] [1], [illegible] -[illegible] [2], [illegible] [0] [illegible]		
32.47	[illegible]	[illegible]	-	[illegible] [0]
32.48	[illegible]	0.000…30.000	s	0.000
32.49	[illegible]	-21474836.00… 21474836.00	-	0.00
32.50	[illegible]	-21474836.00… 21474836.00	-	0.00
32.51	[illegible]	0.00...100000.00	-	0.00
32.55	[illegible]	[illegible]	-	[illegible] [0]

HI

[illegible]	[illegible]	[illegible]	[illegible]	[illegible]
32.56	[illegible]	[illegible] [0], [illegible] [1], [illegible] [2], [illegible] [0] [illegible]	-	[illegible]
32.57	[illegible]	[illegible]	-	[illegible] [0]
32.58	[illegible]	0.000 … 30.000	s	0.000
32.59	[illegible]	-21474836.00… 21474836.00	-	0.00
32.60	[illegible]	-21474836.00… 21474836.00	-	0.00
32.61	[illegible]	0.00...100000.00	-	0.00
34 [illegible]				
34.01	[illegible]	0b0000…0b1111	-	0b0000

HI

[illegible]

Bit	[illegible]	Bit	[illegible]	Bit	[illegible]	Bit	[illegible]
0	[illegible] 1	[illegible] 1	[illegible] 2	[illegible] 2	[illegible] 3	[illegible] 3...15	[illegible]

34.02	[illegible]	0b0000…0b1111	-	0b0000

Bit	[illegible]	Bit	[illegible]	Bit	[illegible]	Bit	[illegible]	Bit	[illegible]
0	[illegible] 1	[illegible] 3	[illegible] 4	[illegible] 6	[illegible] 7	[illegible] 9	[illegible] 10	[illegible] 12...15	[illegible]
1	Timer 2	4	[illegible] 5	[illegible] 7	[illegible] 9	[illegible] 10	[illegible] 11	[illegible]	
2	[illegible] 3	[illegible] 5	[illegible] 6	[illegible] 8	[illegible] 9	[illegible] 11	[illegible] 12	[illegible]	

34.04	[illegible]	0b0000…0b1111	-	0b0000

Bit	[illegible]	Bit	[illegible]	Bit	[illegible]
0	[illegible] 1	3	[illegible] 4	11	[illegible]
1	[illegible] 2	4...9	[illegible]	12...15	[illegible]
2	[illegible] 3	10	[illegible]		

34.10	[illegible]	0...7	-	[illegible] [0]

[illegible]	[illegible] [0]	[illegible] [1]	DI1[2]	DI2[3]	DI3[4]	DI5[6]	DI4[5]	DI6[7]	[illegible] ...

34.11	[illegible] 1	0b0000…0b1111	-	0b0111

Bit		Bit		Bit		Bit	
0		4		8		12	
1		5		9		13	
2		6		10		14...15	
3		7		11			

34.12		00:00:00...23:59:59	-	00:00:00
34.13		00 00:00...07 00:00	-	00:00:00
34.14			-	0b0111
34.15		00:00:00...23:59:59	-	00:00:00
34.16		00 00:00...07 00:00	-	00:00:00
34.17			-	0b0111
34.18		00:00:00...23:59:59	-	00:00:00
34.19		00 00:00...07 00:00	-	00:00:00
34.20			-	0b0111
34.21		00:00:00...23:59:59	-	00:00:00
34.22		00 00:00...07 00:00	-	00:00:00
34.23			-	0b0111
34.24		00:00:00...23:59:59	-	00:00:00
34.25		00 00:00...07 00:00	-	00:00:00
34.26			-	0b0111
34.27		00:00:00...23:59:59	-	00:00:00
34.28		00 00:00...07 00:00	-	00:00:00
34.29			-	0b0111
34.30		00:00:00...23:59:59	-	00:00:00
34.31		00 00:00...07 00:00	-	00:00:00
34.32			-	0b0111
34.33		00:00:00...23:59:59	-	00:00:00
34.34		00 00:00...07 00:00	-	00:00:00
34.35			-	0b0111
34.36		00:00:00...23:59:59	-	00:00:00

HI

[illegible]	[illegible]	[illegible]	[illegible]	[illegible]
34.37	9 [illegible]	00 00:00…07 00:00	-	00:00:00
34.38	10 [illegible]	34.11 [illegible]	- [illegible]	0b0111
34.39	10 [illegible]	00:00:00…23:59:59	-	00:00:00
34.40	10 [illegible]	00 00:00…07 00:00	-	00:00:00
34.41	11 [illegible]	34.11 [illegible]	- [illegible]	0b0111
34.42	11 [illegible]	00:00:00…23:59:59	-	00:00:00
34.43	11 [illegible]	00 00:00…07 00:00	-	00:00:00
34.44	12 [illegible]	34.11 [illegible]	- [illegible]	0b0111
34.45	12 [illegible]	00:00:00…23:59:59	-	00:00:00
34.46	12 [illegible]	00 00:00…07 00:00	-	00:00:00
34.60	1 [illegible]	-	-	1.1
34.61	2 [illegible]	-	-	1.1
34.62	3 [illegible]	-	-	1.1
34.63	4 [illegible]	-	-	1.1
34.70	[illegible]	0…16	-	3
34.71	[illegible]	0b0000…0b1111	-	0b0000

Bit	[illegible]	Bit	[illegible]	Bit	[illegible]	Bit	[illegible]
0	1 [illegible]	4	5 [illegible]	8	9 [illegible]	12	13 [illegible]
1	2 [illegible]	5	6 [illegible]	9	10 [illegible]	13	14 [illegible]
2	3 [illegible]	6	7 [illegible]	10	11 [illegible]	14	15 [illegible]
3	4 [illegible]	7	8 [illegible]	11	12 [illegible]	15	16 [illegible]

34.72	1 [illegible]	-	-	1.1
34.73	1 [illegible]	0…60	[illegible]	0
34.74	2 [illegible]	-	-	1.1
34.75	2 [illegible]	0…60	[illegible]	0
34.76	3 [illegible]	-	-	1.1
34.77	3 [illegible]	0…60	[illegible]	0
34.78	4 [illegible]	-	-	1.1
34.79	5 [illegible]	-	-	1.1
34.80	6 [illegible]	-	-	1.1

HI

[illegible]	[illegible]	[illegible]	[illegible]	[illegible]
34.81	[illegible]	-	-	1.1
34.82	[illegible]	-	-	1.1
34.83	[illegible]	-	-	1.1
34.84	[illegible]	-	-	1.1
34.85	[illegible]	-	-	1.1
34.86	[illegible]	-	-	1.1
34.87	[illegible]	-	-	1.1
34.88	[illegible]	-	-	1.1
34.89	[illegible]	-	-	1.1
34.90	[illegible]	-	-	1.1
34.100	[illegible]	0b0000…0b1111	-	0b0000

Bit	[illegible]	Bit	[illegible]	Bit	[illegible]	Bit	[illegible]	Bit	[illegible]
0	[illegible]	[illegible]	[illegible]	[illegible]	[illegible]	[illegible]	[illegible]	[illegible]	[illegible]
1	Timer 2	4	[illegible]	[illegible]	[illegible]	[illegible]	[illegible]		
2	[illegible]	[illegible]	[illegible]	[illegible]	[illegible]	[illegible]	[illegible]		

34.101	[illegible]	[illegible]	-	0b0000
34.102	[illegible]	[illegible]	-	0b0000
34.110	[illegible]	0b0000…0b1111	-	0b0000

Bit	[illegible]	Bit	[illegible]
0	[illegible]	2	[illegible]
1	[illegible]	04…15	[illegible]

34.111	[illegible]	0…7	-	[illegible] [0]

[illegible] [0]	On[1]	DI1[2]	DI2[3]	DI3[4]	DI4[5]	DI5[6]	DI6[7]	[illegible] …

34.112	[illegible]	00 00:00…07 00:00	-	00:00:00
35 [illegible]				
35.01	[illegible]	-60…1000 °C	°C	0
35.02	[illegible]	-60…5000 °C	°C	0
35.03	[illegible]	-60…5000 °C	°C,	0

HI

[illegible]	[illegible]	[illegible]	[illegible]
35.05	[illegible]	0.0...300.0%	%	0.0
35.11	1 [illegible]	-	-	[illegible] [1]

[illegible] [0]	[illegible] [11]	PTC analog I/O [20]
[illegible] [1]	KTY83 analog I/O[12]	Therm(0)[21]
KTY84 analog I/O[2]	1 × Pt1000 analog I/O[13]	Therm(1)[22]
1 × Pt100 analog I/O[5]	2 × Pt1000 analog I/O[14]	
2 × Pt100 analog I/O[6]	3 × Pt1000 analog I/O[15]	
3 × Pt100 analog I/O[7]	NI 1000[16]	
PTC DI6 [8]	PTC extension module[19]	

35.12	1 [illegible]	-60…5000 °C	°C	130 °C
35.13	1 [illegible]	-60…5000 °C	°C	110 °C
35.14	1 AI [illegible]	0...2	-	[illegible] [0]

[illegible] [0]	AI1 [illegible] [1] [illegible]	AI2 [illegible] [2] [illegible]	[illegible] ...

35.21	2 [illegible]	35.11 [illegible]	-	[illegible] [1]
35.22	2 [illegible]	-60…5000 °C	°C	130 °C
35.23	2 [illegible]	-60…5000 °C	°C	110 °C
35.24	2 AI [illegible]	35.14 [illegible] AI [illegible]	-	[illegible] [0]
35.50	[illegible]	-60…100 °C	°C	20
35.51	[illegible]	50…150	%	110
35.52	[illegible]	25…150	%	70
35.53	[illegible]	1.00 … 500.00	Hz	45.00
35.54	[illegible]	0…300 °C	°C	80
35.55	[illegible]	100…10000	s	256
35.56	[illegible]	[illegible] [0], [illegible] [1], - [illegible] [2]	[illegible] [2]
35.57	[illegible]	5 [0], 10 [1], 20 [2], 30 [3], 40 [4]	-	20 [2]
36 [illegible]				
36.01	PVL [illegible]	-	-	[illegible] [4]

HI

[illegible]		[illegible]	[illegible]	[illegible]
	[illegible] [0]	[illegible] [6]	[illegible] [11]	PID [illegible] [16]
	[illegible] [1]	DC [illegible] [7]	[illegible] [13]	[illegible] ...
	[illegible] [3]	[illegible] [8]	[illegible] [14]	[illegible]
	[illegible] [4]	[illegible] [10]	[illegible] [15]	
36.02	PVL [illegible]	0.00 … 120.00	s	2.00
36.09	[illegible]	[illegible] PVL [illegible] [20],	-	[illegible] [0]
36.10	PVL [illegible]	-32768.00 … 32767.00	-	0.00
36.11	PVL [illegible]	1/1/1980...6/5/2159	-	1/1/1980
36.12	PVL [illegible]	00:00:00...23:59:59	-	00:00:00
36.13	PVL [illegible]	-32768.00 … 32767.00	A	0.00
36.14	PVL DC [illegible]	0.00 … 2000.00	V	0.00
36.15	PVL [illegible]	-30000.00-30000.00	rpm	0.00
36.16	PVL [illegible]	1/1/1980...6/5/2159	-	1/1/1980
36.17	PVL [illegible]	00:00:00...23:59:59	-	00:00:00
37 [illegible]				
37.01	ULC [illegible]	0b0000…0b1111	-	0b0000

Bit	[illegible]	Bit	[illegible]	Bit	[illegible]
0	[illegible]	2	[illegible]	4...15	[illegible]
1	[illegible]	3	[illegible]		

37.02	ULC [illegible]	0...3	-	[illegible] %[3]
	[illegible] [0]	[illegible] %[2]	[illegible] %[4]	[illegible] ...
	[illegible] %[1]	[illegible] %[3]	[illegible] %[5]	
37.03	ULC [illegible]	0...3	-	[illegible] [0]
	[illegible] [0]	[illegible] [1]	[illegible] [2]	[illegible] / [illegible] [3]
37.04	ULC [illegible]	37.03 ULC [illegible]	-	[illegible] [0]
37.11	ULC [illegible] 1 [illegible]	-30000.0… 30000.0	rpm	150.0
37.12	ULC [illegible] 2 [illegible]	-30000.0… 30000.0	rpm	750.0

HI

[illegible]	[illegible]	[illegible]	[illegible]	[illegible]
37.13	ULC [illegible]	-30000.0… 30000.0	rpm	1290.0
37.14	ULC [illegible]	-30000.0… 30000.0	rpm	1500.0
37.15	ULC [illegible]	-30000.0… 30000.0	rpm	1800.0
37.21	ULC [illegible]	-1600.0… 1600.0	%	10.0
37.22	ULC [illegible]	-1600.0… 1600.0	%	15.0
37.23	ULC [illegible]	-1600.0… 1600.0	%	25.0
37.24	ULC [illegible]	-1600.0… 1600.0	%	30.0
37.25	ULC [illegible]	-1600.0… 1600.0	%	30.0
37.31	ULC [illegible]	-1600.0… 1600.0	%	300.0
37.32	ULC [illegible]	-1600.0… 1600.0	%	300.0
37.33	ULC [illegible]	-1600.0… 1600.0	%	300.0
37.34	ULC [illegible]	-1600.0… 1600.0	%	300.0
37.35	ULC [illegible]	-1600.0… 1600.0	%	300.0
37.41	ULC [illegible]	0.0...10000.0	s	20.0
37.42	ULC [illegible]	0.0...10000.0	s	20.0
40 PID [illegible]				
40.01	PID [illegible]	-200000.00 … 200000.00	-	0.00
40.02	PID [illegible]	-200000.00 … 200000.00	-	0.00
40.03	PID [illegible]	-200000.00 … 200000.00	-	0.00
40.04	PID [illegible]	-200000.00 … 200000.00	-	0.00
40.05	Process PID trim output act	-200000.00 … 200000.00	-	0.00
40.06	PID [illegible]	0b0000…0b1111	-	0b0000

Bit	[illegible]	Bit	[illegible]	Bit	[illegible]	Bit	[illegible]	Bit	[illegible]
0	PID [illegible]	3	PID [illegible]	6	[illegible]	9	[illegible]	12	[illegible]
1	[illegible]	4	[illegible]	7	[illegible]	10	PID [illegible]	13...15	[illegible]
2	[illegible]	5	Trim mode	8	[illegible]	11	[illegible]		

40.07	1 PID [illegible]	0...2	-	[illegible] [0]

HI

[illegible]				
	[illegible] [0]	On[1]	[illegible] [2]	
40.08	[illegible]	0...3, 8...10	-	AI2 [illegible] [9]
	[illegible] [0]	[illegible] [3]	[illegible] [10]	
	AI1 [illegible] [1]	AI1 [illegible] [8]	Other.	
	AI2 [illegible] [2]	AI2 [illegible] [9]		
40.09	[illegible]	[illegible]	-	[illegible] [0]
40.10	[illegible]	0...11	-	In1[0]
	In1[0]	In1*In2[3]	[illegible] (In1,In2)[6]	sqrt(In1-In2)[9]
	In1+In2[1]	In1/In2[4]	[illegible] (In1,In2)[7]	sqrt(In1+In2)[10]
	In1-In2[2]	[illegible] (In1,In2)[5]	sqrt(In1)[8]	sqrt(In1)+sqrt(In2)[11]
40.11	[illegible]	0.000 … 30.000	s	0.000
40.14	[illegible]	-200000.00...200000.00	-	0.00
40.15	[illegible]	-200000.00...200000.00	-	0.00
40.16	[illegible]	0, 2...4, 8, 10...16, 19, 20, 24	-	AI1 [illegible] [11]
	[illegible] [0]	[illegible] [13]	EFB [illegible] 1[19]	
	[illegible] [2]	[illegible] [10]	[illegible] [14]	EFB [illegible] 2[20]
	AI1 [illegible] [3]	AI1 [illegible] [11]	FB A [illegible] 1[15]	[illegible] [24]
	AI2 [illegible] [4]	AI2 [illegible] [12]	FB A [illegible] 2[16]	[illegible] ...
40.17	[illegible]	[illegible]	-	[illegible] [0]
40.18	[illegible]	[illegible]	-	In1[0]
40.19	[illegible]	0...7, 18...23	-	[illegible] [0]
	[illegible] [0]	DI2[3]	DI5[6]	[illegible] [19] [illegible] 2[22] [illegible]
	[illegible] [1]	DI3[4]	DI6[7]	[illegible] [20] [illegible] 3[23] [illegible]
	DI1[2]	DI4[5]	[illegible] [18]	[illegible] [21] [illegible] ...
40.20	[illegible]	[illegible]	-	[illegible] [0]

HI

[illegible]	[illegible]	[illegible]	[illegible]	[illegible]
40.21	[illegible]	-200000.00 … 200000.00	PID [illegible]	0.00
40.22	[illegible]	-200000.00 … 200000.00	PID [illegible]	0.00
40.23	[illegible]	-200000.00 … 200000.00	PID [illegible]	0.00
40.24	[illegible]	-200000.00 … 200000.00	PID [illegible]	0.00
40.26	[illegible]	-200000.00 … 200000.00	PID [illegible]	0.00
40.27	[illegible]	-200000.00 … 200000.00	PID [illegible]	200000.00
40.28	[illegible]	0.0 … 1800.0	s	0.0
40.29	[illegible]	0.0 … 1800.0	s	0.0
40.30	[illegible]	[illegible]	-	[illegible] [0]
40.31	[illegible]	[illegible] [0] [illegible] [1]	-	[illegible] [0]
40.32	[illegible]	0.01 … 100.00	-	1.00
40.33	[illegible]	0.0 … 9999.0	s	60.0
40.34	Set 1 derivation time	0.000 … 10.000	s	0.000
40.35	[illegible]	0.0 … 10.0	s	0.0
40.36	[illegible]	-200000.00 … 200000.00	-	0.00
40.37	[illegible]	-200000.00 … 200000.00	-	100.00
40.38	[illegible]	[illegible]	-	[illegible] [0]
40.39	[illegible]	0.00 … 200000.00	-	0.00
40.40	[illegible]	0.0 … 3600.0	s	0.0
40.43	Set 1 sleep level	0.0 … 200000.0	-	0.0
40.44	[illegible]	0.0 … 3600.0	s	60.0
40.45	[illegible]	0.0 … 3600.0	s	0.0
40.46	[illegible]	0.00 … 200000.00	PID [illegible]	0.00
40.47	[illegible]	-200000.00 … 200000.00	PID [illegible]	0.00
40.48	[illegible]	0.00 … 60.00	s	0.50
40.49	[illegible]	[illegible]	-	[illegible] [0]

HI

[illegible]	[illegible]	[illegible]	[illegible]	[illegible]
40.50	[illegible]	0...4	-	[illegible][0]
	[illegible][0] / AI1 [illegible] / AI2 [illegible][1] / [illegible] FB A[2] / [illegible] FB A 1[3] / [illegible][4]..			
40.51	Set 1 trim mode	Off[0], Direct[1], Proportional[2], Combined[3]	-	[illegible] [0]
40.52	Set 1 trim selection	[illegible][2], [illegible]	-	[illegible] [2]
40.53	Set 1 trimmed ref pointer	0...4	-	[illegible][0]
	[illegible][0] / AI1 [illegible] / AI2 [illegible][1] / [illegible] FB A[2] / [illegible] FB A 1[3] / [illegible][4]..			
40.54	Set 1 trim mix	0.000...1.000	-	0.000
40.55	Set 1 trim adjust	-100.000...100.000	-	1.000
40.56	Set 1 trim source	PID ref[1], PID output[2]	-	PID output[2]
40.57	PID set1/set2 [illegible]	0...7, 18...23	-	PID [illegible][0]
	PID [illegible][0] / DI2[3] / DI5[6] / [illegible][19] / [illegible][22] [illegible] PID [illegible][1] / DI3[4] / DI6[7] / [illegible][20] / [illegible][23] [illegible] DI1[2] / DI4[5] / [illegible][18] / [illegible][21] [illegible] ...			
40.58	[illegible]	No[0], Limiting[1], Other...	-	[illegible]
40.59	[illegible]	No[0], Limiting[1], Other...	-	[illegible]
40.60	[illegible]	0...8	-	On[1]
	[illegible] [0] / Ext1/Ext2 [illegible][2] / [illegible][4] / DI4[6] / DI6[8] On[1] / DI1[3] / DI3[5] / DI5[7] / [illegible] ...			
40.61	[illegible]	-200000.00 … 200000.00	-	0.00
40.62	PID [illegible]	-200000.00 … 200000.00	PID [illegible]	0.00
40.65	Trim auto connection	Disable [0], Enable[1]	-	[illegible][0]
40.79	[illegible]	0...31	[illegible]	°C[8]

HI

[0]	inH2O[7]	l/min[14]	ft^3/m[21]	gal/m[28]
%[1]	°C[8]	l/h[15]	ft^3/h[22]	in wg[29]
bar[2]	°F[9]	m^3/s[16]	ppm[23]	MPa[30]
kPa[3]	mbar[10]	m^3/m[17]	inHg[24]	ftWC[31]
Pa[4]	m^3/h[11]	km^3/h[18]	kCFM[25]	
psi[5]	dm^3/h[12]	gal/s[19]	inWC[26]	
CFM[6]	l/s[13]	ft^3/s[20]	GPM[27]	

40.80	[illegible]	[illegible] [1],	-	[illegible] [1]
40.81	[illegible]	[illegible] [1],	-	[illegible] [1]
40.89	[illegible]	-200000.00 … 200000.00	-	1.00
40.90	[illegible]	-200000.00 … 200000.00	-	1.00
40.91	[illegible]	-327.68…327.68	-	0.00
40.92	[illegible]	-327.68…327.68	-	0.00
40.96	[illegible]	-100.00...100.00	%	0.00
40.97	[illegible]	-100.00...100.00	%	0.00
40.98	[illegible]	-100.00...100.00	%	0.00
40.99	[illegible]	-100.00...100.00	%	0.00
41 [illegible]				
41.08	[illegible]	[illegible]	-	AI2 [illegible] [9]
41.09	[illegible]	[illegible]	-	[illegible] [0]
41.10	[illegible]	[illegible]	-	In1[0]
41.11	[illegible]	0.000 … 30.000	s	0.000
41.14	[illegible]	-200000.00 … 200000.00	-	0.00
41.15	[illegible]	-200000.00 … 200000.00	-	0.00
41.16	[illegible]	[illegible]	-	AI percent[11]
41.17	[illegible]	[illegible]	-	[illegible] [0]
41.18	[illegible]	[illegible]	-	In1[0]
41.19	[illegible]	[illegible]	-	[illegible] [0]

HI

[illegible]	[illegible]	[illegible]	[illegible]	[illegible]
41.20	[illegible]	[illegible]	-	[illegible] [0]
41.21	[illegible]	-200000.00 … 200000.00	PID [illegible]	0.00
41.22	[illegible]	-200000.00 … 200000.00	PID [illegible]	0.00
41.23	[illegible]	-200000.00 … 200000.00	PID [illegible]	0.00
41.24	[illegible]	-200000.00 … 200000.00	PID [illegible]	0.00
41.26	[illegible]	-200000.00 … 200000.00	PID [illegible]	0.00
41.27	[illegible]	-200000.00 … 200000.00	PID [illegible]	200000.00
41.28	[illegible]	0.0 … 1800.0	s	0.0
41.29	[illegible]	0.0 … 1800.0	s	0.0
41.30	[illegible]	[illegible]	-	[illegible] [0]
41.31	[illegible]	[illegible]	-	[illegible] [0]
41.32	[illegible]	0.01 … 100.00	-	1.00
41.33	[illegible]	0.0 … 9999.0	s	60.0
41.34	[illegible]	0.000 … 10.000	s	0.000
41.35	[illegible]	0.0 … 10.0	s	0.0
41.36	[illegible]	-200000.00 … 200000.00	-	0.00
41.37	[illegible]	-200000.00 … 200000.00	-	100.00
41.38	[illegible]	[illegible]	-	[illegible] [0]
41.39	[illegible]	0.00 … 200000.00	-	0.00
41.40	[illegible]	0.0 … 3600.0	s	0.0
41.43	[illegible]	0.0 … 200000.0	-	0.0
41.44	[illegible]	0.0 … 3600.0	s	60.0
41.45	[illegible]	0.0 … 3600.0	s	0.0
41.46	[illegible]	0.00 … 200000.00	PID [illegible]	0.00
41.47	[illegible]	-200000.00 … 200000.00	PID [illegible]	0.00
41.48	[illegible]	0.00 … 60.00	s	0.50

HI

[illegible]	[illegible]	[illegible]	[illegible]	[illegible]
41.49	[illegible]	[illegible]	-	[illegible] [0]
41.50	[illegible]	[illegible]	-	[illegible] [0]
41.51	[illegible]	[illegible]	-	[illegible] [0]
41.52	Set 2 trim selection	See parameter 40.52 Set 1 trim selection	-	[illegible] [2]
41.53	Set 2 trimmed ref pointer	See parameter 40.53 Set 1 trimmed ref pointer	-	[illegible] [0]
41.54	Set 2 trim mix	See parameter 40.54 Set 1 trim mix	-	0.000
41.55	Set 2 trim adjust	See parameter 40.55 Set 2 trim adjust	-	1.000
41.56	Set 2 trim source	See parameter 40.56 Set 1 trim source	-	PID output[2]
41.58	[illegible]	[illegible]	-	[illegible]
41.59	[illegible]	[illegible]	-	[illegible]
41.60	[illegible]	0...8	-	On[1]
	[illegible] [0] / Ext1/Ext2 [illegible] [2] / DI2[4] / DI4[6] / DI6[8] / On[1] / DI1[3] / DI3[5] / DI5[7] / [illegible] ...			
41.79	[illegible]	[illegible]	[illegible] °C[8]	
41.80	[illegible]	[illegible] [0], [illegible] [1],	-	[illegible] [1]
41.81	[illegible]	[illegible] [0], [illegible] [1],	-	[illegible] [1]
41.89	[illegible]	[illegible]	[illegible]	1.00
41.90	[illegible]	[illegible]	[illegible]	1.00
43 [illegible] This parameter group is applicable only for frames R0...R3.				
43.01	[illegible]	0.0 … 120.0	%	-
43.06	[illegible]	0...3	-	[illegible] [0]
	[illegible] [0] / [illegible] [1] / [illegible] [2] / [illegible] [3]			
43.07	[illegible]	[illegible] [0], [illegible] [1], ...	-	On[1]
43.08	[illegible]	0…10000	s	0
43.09	[illegible]	0.00 … 10000.00	kW	0.00
43.10	[illegible]	0.0 … 1000.0	ohm	0.0

HI

[illegible]	[illegible]	[illegible]	[illegible]	[illegible]
43.11	[illegible]	0…150	%	105
43.12	[illegible]	0…150	%	95
44 [illegible]				
44.01	[illegible]	0b0000…0b1111	-	0b0000
44.06	[illegible]	0...7, 18...20, 24...26	-	[illegible][0]
	[illegible][0] / DI2[3] / DI5[6] / [illegible][19] / [illegible][25] [illegible] [illegible] [1] / DI3[4] / DI6[7] / [illegible][20] / [illegible][26] [illegible] DI1[2] / DI4[5] / [illegible][18] / [illegible][24] [illegible] ...			
44.08	[illegible]	0.00 … 5.00	s	0.00
44.13	[illegible]	0.00 … 60.00	s	0.00
44.14	[illegible]	0.00 … 1000.00	rpm	100.00
45 [illegible]				
45.01	[illegible]	0…65535	GWh	0
45.02	[illegible]	0…999	MWh	0
45.03	[illegible]	0.0 … 999.9	kWh	0.0
45.04	[illegible]	0...214748368.0	kWh	0.0
45.05	[illegible]	0…4294967295	INR	0
45.06	[illegible]	0.00 … 999.99	INR	0.00
45.07	[illegible]	0.00 … 21474830.00	INR	0.00
45.08	CO2 [illegible]	0…65535	metric kiloton	0
45.09	CO2 [illegible]	0.0 … 999.9	metric ton	0.0
45.10	[illegible]	0.0 … 214748304.0	metric ton	0.0
45.11	[illegible]	[illegible][0], [1]	-	[illegible][0]
45.12	[illegible]	0.000 … 4294966.296	INR	5.000
45.13	Energy tariff 2	0.000 … 4294966.296	INR	6.000
45.14	[illegible]	0...7	-	[illegible][0]
	[illegible][0] / [illegible][1] / DI1[2] / DI2[3] / DI3[4] / DI4[5] / DI5[6] / DI6[7] / [illegible] ...			
45.17	[illegible]	Local currency[100], EUR[101], USD[102]	Local currency	Local currency[100]

HI

[illegible]	[illegible]	[illegible]	[illegible]	[illegible]
45.18	CO2 [illegible]	0.000 … 65.535	tn/ MWh	0.500
45.19	[illegible]	0.0 … 10000000.0	kW	0.00
45.21	[illegible]	[illegible] [0], [1]	-	[illegible] [0]
45.24	[illegible]	-3000.00 … 3000.00	kW	0.00
45.25	[illegible]	00:00:00...00:00:00	-	00:00:00
45.26	[illegible])	-3000.00 … 3000.00	kWh	0.00
45.27	[illegible] (□) [illegible]	-3000.00 … 3000.00	kW	0.00
45.28	[illegible]	00:00:00...00:00:00	-	00:00:00
45.29	Daily total energy (resettable)	-30000.00 … 30000.00	kWh	0.00
45.30	[illegible]	-30000.00 … 30000.00	kWh	0.00
45.31	[illegible])	-3000.00 … 3000.00	kW	0.00
45.32	[illegible]	1/1/1980...6/5/2159	-	1/1/1980
45.33	[illegible]	00:00:00...00:00:00	-	00:00:00
45.34	Monthly total energy (resettable)	-1000000.00 … 1000000.00	kWh	0.00
45.35	[illegible]	-1000000.00 … 1000000.00	kWh	0.00
45.36	[illegible]	-3000.00 … 3000.00	kW	0.00
45.37	[illegible]	1/1/1980...6/5/2159	-	1/1/1980
45.38	[illegible]	00:00:00...00:00:00	-	00:00:00
46 [illegible]				
46.01	[illegible]	0.10 … 30000.00	rpm	1500.00
46.02	[illegible]	0.10 … 1000.00	Hz	50.00
46.03	[illegible]	0.1 … 1000.0	%	100.0
46.04	[illegible]	0.10…30000.00	kW or hp	1000.00
46.05	[illegible]	0…30000	A	10000
46.06	[illegible]	0.00 … 30000.00	rpm	0.00
46.07	[illegible]	0.00 … 1000.00	Hz	0.00
46.11	[illegible]	2…20000	ms	500
46.12	[illegible]	2…20000	ms	500
46.13	[illegible]	2…20000	ms	100
46.14	[illegible]	2…20000	ms	100

HI

[illegible]	[illegible]	[illegible]	[illegible]	[illegible]
46.21	hysteresis [illegible]	0.00 … 30000.00	rpm	50.00
46.22	[illegible]	0.00 … 1000.00	Hz	2.00
46.31	[illegible]	0.00 … 30000.00	rpm	1500.00
46.32	[illegible]	0.00 … 1000.00	Hz	50.00
46.33	[illegible]	0.0 … 1600.0	%	300.0
46.41	kWh [illegible]	0.001...1000.000	kWh	1.000
46.43	[illegible]	0...3	-	2
46.44	[illegible]	0...3	-	1
47 [illegible]				
47.01	[illegible] Real32 [illegible]	-2147483.000…2147483.000	-	0.000
47.02	[illegible] Real32 [illegible]	-2147483.000…2147483.000	-	0.000
47.03	[illegible] Real32 [illegible]	-2147483.000…2147483.000	-	0.000
47.04	[illegible] Real32 [illegible]	-2147483.000…2147483.000	-	0.000
47.11	[illegible] Int32 [illegible]	-2147483648 … 2147483647	-	0
47.12	[illegible] Int32 [illegible]	-2147483648 … 2147483647	-	0
47.13	[illegible] Int32 [illegible]	-2147483648 … 2147483647	-	0
47.14	[illegible] Int32 [illegible]	-2147483648 … 2147483647	-	0
47.21	[illegible] Int16 [illegible]	-32768 … 32767	-	0
47.22	[illegible] Int16 [illegible]	-32768 … 32767	-	0
47.23	[illegible] Int16 [illegible]	-32768 … 32767	-	0
47.24	[illegible] Int16 [illegible]	-32768 … 32767	-	0
49 [illegible]				
49.01	[illegible]	1…32	-	1
49.03	[illegible]	1...5	-	115.2 kbps[4]
	38.4 kbps[1] / 57.6 kbps[2] / 86.4 kbps[3] / 115.2 kbps[4] / 230.4 kbps[5]			
49.04	[illegible]	0.3 … 3000.0	s	10.0
49.05	[illegible]	0...3	-	[illegible] [1]

HI

[illegible]	[illegible]	[illegible]	[illegible]
	[illegible] [0] [illegible] / [illegible] [1] / [illegible] [2] / [illegible] [3]		
49.06	[illegible]	[illegible] [0], [1] [illegible]	-	[illegible] [0]
49.19	[illegible]	0, 1, 3...8, 10, 11, 14, 16, 20, 21, 26...28, 30...32, 37	-	[illegible] [0]
	[illegible] [0] / DC [illegible] [7] / [illegible] [20] / [illegible] [31] [illegible] [1] / [illegible] [8] / [illegible] [21] / [illegible] [32] [illegible] [3] / [illegible] [10] / [illegible] [26] / AO1 [illegible] [37] [illegible] [4] / [illegible] [11] / Abs [illegible] % [27] / AO2 [illegible] [38] [illegible] % [5] / [illegible] [14], [16] / [illegible] [28] [illegible] [6] / PID [illegible] [16] / Abs [illegible] [30]			
49.20	[illegible]	49.19 [illegible]	-	[illegible] [0]
49.21	[illegible]	49.19 [illegible]	-	[illegible] [0]
49.219	[illegible]	49.19 [illegible]	-	[illegible] [0]
49.220	[illegible]	49.19 [illegible]	-	[illegible] [0]
49.221	[illegible]	49.19 [illegible]	-	[illegible] [0]
50 (FBA) [illegible]				
50.01	FBA A [illegible]	[illegible] [0], [1]	-	[illegible] [0]
50.02	FBA A [illegible]	0...5	-	[illegible] [0] [illegible]
	[illegible] [0] / [illegible] [1] / [illegible] [2] / [illegible] [3] / [illegible] [4] / [illegible] [5]			
50.03	FBA A [illegible]	0.3 … 6553.5	s	0.3
50.04	FBA A [illegible] 1	0...5	-	[illegible] [0]
	[illegible] [0] / [illegible] [2] / [illegible] [4] / [illegible] [5] [illegible] [1] / [illegible] [3]			
50.05	FBA A [illegible] 2	50.04 FBA A [illegible]	+ 1	[illegible] [0]
50.06	FBA A SW [illegible]	[illegible] [0], [1] [illegible]	-	[illegible] [0]
50.07	FBA A 1 [illegible]	50.04 FBA A [illegible]	+ 1	[illegible] [0]
50.08	FBA A 2 [illegible]	50.04 FBA A [illegible]	+ 1	[illegible] [0]
50.09	FBA A SW [illegible]	-	-	[illegible]

HI

[illegible]	[illegible]	[illegible]	[illegible]	[illegible]
50.10	FBA A act1 [illegible]	-	-	[illegible]
50.11	FBA A act2 [illegible]	-	-	[illegible]
50.12	FBA A [illegible]	[illegible] [0]...[1]	-	[illegible]
50.13	FBA A [illegible]	0.0.0.0.0...FF.FF.FF.FF	-	0.0.0.0
50.14	FBA A 1 [illegible]	-2147483648 … 2147483647	-	0
50.15	FBA A 2 [illegible]	-2147483648 … 2147483647	-	0
50.16	FBA A [illegible]	0.0.0.0.0...FF.FF.FF.FF	-	0.0.0.0
50.17	FBA A 1 [illegible]	-2147483648 … 2147483647	-	0
50.18	FBA A 2 [illegible]	-2147483648 … 2147483647	-	0
51 FBA A [illegible]				
51.01	FBA A [illegible]	0, 1, 32, 37, 101, 128, 132, 135, 136, 485, 47808	-	[illegible] [0]

[illegible] [0]	DeviceNet[37]	PROFInet IO[132]	RS-485 comm[485]
PROFIBUS-DP[1]	ControlNet[101]	EtherCAT[135]	BACnet[47808]
CANopen[32]	Ethernet[128]	ETH Pwrlink[136]	

51.02	FBA A Par2	0…65535	-	0
…	…	…	…	...
51.26	FBA A Par26	0…65535	-	0
51.27	FBA A par [illegible]	[illegible] [0]...[1] [illegible]	-	[illegible] [0]
51.28	FBA A [illegible]	0x0000...0xffff	-	0x0000
51.29	FBA A [illegible]	0…65535	-	0
51.30	FBA A [illegible]	0…65535	-	0
51.31	D2FBA A [illegible]	0...6	-	[illegible] [0] [illegible]

[illegible] [0] [illegible]	[illegible] [2]	[illegible] -[illegible] [4]	[illegible] [6]
[illegible] [1]	[illegible] [3] [illegible]	[illegible] -[illegible] [5]	

51.32	FBA A SW [illegible]	0x0000...0xffff	-	0x0000
51.33	FBA A SW [illegible]	0x0000...0xffff	-	0x0000

HI

[illegible]	[illegible]	[illegible]	[illegible]	[illegible]
52 FBA A [illegible]				
52.01	FBA A [illegible] 1 [illegible]	0...6, 11...16, 24	-	[illegible]
	[illegible] [0] / [illegible] 16 [illegible] [3] [illegible] 2 / Act1 16 [illegible] [6] / [illegible] 32 [illegible] [13] [illegible] 1 / Act2 32 [illegible] [16] CW 16 [illegible] [1] / SW 16 [illegible] [4] / CW 32 [illegible] [11] / SW 32 [illegible] [14] / SW2 6 [illegible] [24] [illegible] 16 [illegible] [2] [illegible] 1 / Act1 16 [illegible] [5] / [illegible] 32 [illegible] [12] [illegible] 1 / Act1 32 [illegible] [15] / [illegible] ...			
...	...	...	...	...
52.12	FBA A [illegible] 2 [illegible]	[illegible] 52.01 FBA A [illegible] 1 [illegible]	-	[illegible]
53 FBA A [illegible]				
53.01	FBA A [illegible] 1	0...3, 11...13, 21	-	[illegible] [0]
	[illegible] [0] / [illegible] 16 [illegible] [2] [illegible] 1 / CW 32 [illegible] [11] / [illegible] 32 [illegible] [13] [illegible] 1 / [illegible] ... CW 16 [illegible] [1] / [illegible] 16 [illegible] [3] [illegible] 2 / [illegible] 32 [illegible] [12] [illegible] 1 / CW 16 [illegible] [21]			
...	...	...	...	...
53.12	FBA A [illegible] 12	[illegible] 53.01 FBA A [illegible] 1	-	[illegible]
58 [illegible]				
58.01	Protocol	[illegible] RTU [0], [illegible]	-	[illegible] [0]
58.02	[illegible]	0000h...FFFFh	-	0
58.03	[illegible]	0...255	-	0
58.04	[illegible]	0...7	-	19.2 kbps[3]
	[illegible] / 9.6 kbps[2] / 38.4 kbps[4] / 76.8 kbps[4] 4.8 kbps[1] / 19.2 kbps[3] / 57.6 kbps[5] / 115.2 kbps[5]			
58.05	[illegible]	0...3	-	8 [illegible] 1[2] [illegible]
	8 [illegible] 1[0] / 8 [illegible] 2[0] / 8 [illegible] 1[2] [illegible] / 8 [illegible] 1[3]			
58.06	[illegible]	[illegible] [0] [illegible] [1] [illegible] [2] [illegible]	-	[illegible] [0]
58.07	[illegible]	0000h...FFFFh	-	0000000000000000b

HI

Bit		Bit		Bit		Bit	
0		4		8		13	1
1		5		9		14	2
2		6		11	CW/	15	
3		7		12			

58.08		0…4294967295	-	0
58.09		0…4294967295	-	0
58.10		0…4294967295	-	0
58.11	UART	0…4294967295	-	0
58.12	CRC	0…4294967295	-	0
58.14		0…5	-	[1]

[0]	[1]	[2]	[3]	[4]	[5]

58.15		Cw / Ref1 / Ref2[1]	-	Cw / Ref1 / Ref2[2]
58.16		0.0…6000.0	s	60
58.17		0…65535	ms	3.0
58.18	EFB	0000h…FFFFh	-	
58.19	EFB	0000h…FFFFh	-	
58.25		ABB DCU [0], [5]	-	ABB [0]
58.26	EFB 1	0…5	-	[0]

[0]	[1]	[2]	[3]	[4]	[5]

58.27	EFB 2	58.26	-	[3]
58.28	EFB 1	58.26	-	[0]
58.29	EFB act2	58.26	-	[0]
58.31	EFB act1	-	-	
58.32	EFB act2	-	-	
58.33		0 [0], 1 [1], 2 [2]	-	0 [0]
58.34		[0], [1]		LO-HI[1]

HI

58.101	I/O 1	0...6, 11...16, 21, 24, 31, 32, 33, 40, 41, ...	-	CW 16 [1]

[0]	SW 16 [4]	32 [12] 1	Act2 32 [16]	AO1 [32]
CW 16 [1]	Act1 16 [5]	32 [13] 1	CW 16 [21]	AO2 [34]
16 [2] 1	Act1 16 [6]	SW 32 [14]	SW2 6 [24]	[40]
16 [3] 2	CW 32 [11]	Act1 32 [15]	RO/DIO [31]	[41]

58.102	I/O 2	58.101	-	16 [2] 1
58.103	I/O 3	58.101	-	16 [3] 2
58.104	I/O 4	58.101	-	SW 16 [4]
58.105	I/O 5	58.101	-	Act1 16 [5]
58.106	I/O 6	58.101	-	Act1 16 [6]
58.107	I/O 7	58.101	-	[0]
...				
58.114	I/O 14	58.101	-	[0]
70 डिजिटल इनपुट				
70.01	डिजिटल इनपुट स्थिति	0b0000...0b1111	-	0b0000

Bit	विवरण	Bit	विवरण	Bit	विवरण
0	डिजिटल इनपुट 1	3	डिजिटल इनपुट 4	12	डिजिटल इनपुट 13
1	डिजिटल इनपुट 2	4	डिजिटल इनपुट 5	13...15	रिज़र्व्ड
2	डिजिटल इनपुट 3	5...11	रिज़र्व्ड		

70.02	डिजिटल इनपुट 1 स्थिति	[0], [1]	-	[0]
70.03	डिजिटल इनपुट 1 असाइनमेंट	0...13	-	[0]

[0]	DI2[3]	DI5[6]	-DI2[9]	-DI5[12]
Used[1]	DI3[4]	DI6[7]	-DI3[10]	-DI6[13]
DI1[2]	DI4[5]	-DI1[8]	-DI4[11]	...

70.04	डिजिटल इनपुट 1 असाइनमेंट	0...6	-	[3]

Constant speed/freq[0]	AI2[2]	[3]	PID 1 [4]
AI1[1]	[3]	Stop [5]	

HI

[illegible]	[illegible]	[illegible]	[illegible]	[illegible]
70.05	[illegible]	0...13	-	[illegible] [0]

[illegible] [0]	DI2[3]	DI5[6]	-DI2[9]	-DI5[12]
[illegible] [1]	DI3[4]	DI6[7]	-DI3[10]	-DI6[13]
DI1[2]	DI4[5]	-DI1[8]	-DI4[11]	[illegible] ...

70.06	[illegible]	-500.0...500.0	Hz	0.0
70.07	Override speed	-30000.0...30000.0	rpm	0.0
70.20	[illegible]	[illegible] [0], [illegible] [1]	-	[illegible] [0] [illegible]
70.21	[illegible]	0...5	-	5
70.22	[illegible]	5.0...120.0 s	s	5.0 s
71 PID1 [illegible]				
71.01	PID [illegible]	-200000.00…200000.00	%	0.00
71.02	[illegible]	-200000.00…200000.00	%	0.00
71.03	[illegible]	-200000.00…200000.00	%	0.00
71.04	[illegible]	-200000.00…200000.00	%	0.00
71.06	PID [illegible]	0000h…FFFFh	-	-

Bit	[illegible]	Bit	[illegible]	Bit	[illegible]
0	PID [illegible]	5...6	[illegible]	9	[illegible]
1	[illegible]	7	[illegible]	10...11	[illegible]
2	[illegible]	8	[illegible]	12	[illegible]
				13...15	[illegible]

71.07	PID [illegible]	40.07 PID [illegible]	-	[illegible] [0]
71.08	1 [illegible]	40.08 1 [illegible]	-	[illegible] [0]
71.11	[illegible]	0.000...30.000	s	0.000
71.14	[illegible]	-200000.00…200000.00	-	1500.00
71.15	[illegible]	-200000.00…200000.00	-	1500.00
71.16	1 [illegible]	40.16 1 [illegible]	-	[illegible] [0]
71.19	[illegible] 1 [illegible]	40.19 1 [illegible] 1 [illegible]	-	[illegible] [0]
71.20	[illegible] 2 [illegible]	40.20 1 [illegible] 2 [illegible]	-	[illegible] [0]
71.21	1 [illegible]	-200000.00…200000.00	%	0.00

HI

[illegible]	[illegible]	[illegible]	[illegible]	[illegible]
71.22	[illegible]	-200000.00…200000.00	%	0.00
71.23	[illegible]	-200000.00…200000.00	%	0.00
71.26	[illegible]	-200000.00... 200000.00	%	0.00
71.27	[illegible]	-200000.00... 200000.00	%	200000.00
71.31	[illegible]	[illegible]	-	[illegible][0]
71.32	[illegible]	0.01...100.00	-	1.00
71.33	[illegible]	0.0...999.0	s	60.0
71.34	[illegible]	0.000...10.000	s	0.000
71.35	[illegible]	0.0...10.0	s	0.0
71.36	[illegible]	-200000.00... 200000.00	%	-200000.00
71.37	[illegible]	-200000.00... 200000.00	%	200000.00
71.38	[illegible]	[illegible]	-	[illegible][0]
71.39	[illegible]	0.0…200000.0	%	0.0
71.40	[illegible]	0.0…3600.0	s	0.0
71.58	[illegible]	No[0], Limiting[1], Process PID min lim[2], Process PID max lim[3], Other...	-	[illegible] [0]
71.59	[illegible]	No[0], Limiting[1], Process PID min lim[2], Process PID max lim[3], Other...	-	[illegible] [0]
71.62	[illegible]	-200000.00… 200000.00	%	0.00
71.79	PID [illegible]	0...31	[illegible]	%[1]

[illegible]	inH2O[7]	l/min[14]	ft3/m[21]	gal/m[28]
%[1]	°C[8]	l/h[15]	ft3/h[22]	in wg[29]
bar[2]	°F[9]	m3/s[16]	ppm[23]	MPa[30]
kPa[3]	mbar[10]	m3/m[17]	inHg[24]	ftWC[31]
Pa[4]	m3/h[11]	km3/h[18]	kCFM[25]	
psi[5]	dm3/h[12]	gal/s[19]	inWC[26]	
CFM[6]	l/s[13]	ft3/s[20]	GPM[27]	

76 PFC [illegible]				
76.01	PFC [illegible]	0b0000…0b1111	-	0b0000

HI

[illegible]	[illegible]	[illegible]	[illegible]	[illegible]
	Bit / [illegible] / **Bit** / [illegible] / **Bit** / [illegible] 0 / PFC 1 [illegible] / 2 / PFC 3 [illegible] / 4...15 / [illegible] 1 / PFC 2 [illegible] / 3 / PFC 4 [illegible] /			
76.02	PFC [illegible]	0...9, 100...103, 200...202, 300...302, 400, 500, 600, 700, 800, 801,	-	PFC [illegible] [0]
	PFC [illegible] [0] / PFC [illegible] [6] / VSD + 2 Aux [illegible] [102] / Aux2 [illegible] [301] / PID [illegible] [800] PFC [illegible] [1] / [illegible] / VSD + 3 Aux [illegible] [103] / Aux3 [illegible] [302] / PID [illegible] [801] SPFC [illegible] [2] / [illegible] [8] / Aux1 [illegible] [200] / [illegible] [400] MPFC [illegible] [3] / PFC (ext) [illegible] [9] / Aux2 [illegible] [201] / [illegible] [500] / [illegible] [illegible] / VSD [illegible] [4] [100] / Aux3 [illegible] [202] / [illegible] [600] PFC [illegible] [5] / VSD + [illegible] Aux [illegible] [101] / Aux1 [illegible] [300] / MPFC [illegible] [700] / [illegible]			
76.11	[illegible]	0b0000…0b1111	-	0b0000
	Bit / [illegible] / **Bit** / [illegible] / **Bit** / [illegible] 0 / [illegible] / 3 / [illegible] / 6…10 / [illegible] 1 / [illegible] / 4 / [illegible] / 11 / [illegible] 2 / [illegible] / 5 / PFC [illegible] / 12…15 / [illegible]			
76.12	[illegible]	76.11 [illegible]	-	0b0000
76.13	[illegible]	76.11 [illegible]	-	0b0000
76.14	[illegible]	76.11 [illegible]	-	0b0000
76.21	PFC [illegible]	[illegible] PFC[2], SPFC[3]	-	[illegible] [0]
76.25	[illegible]	1…4	-	1
76.26	[illegible]	0…4	-	1
76.27	[illegible]	1…4	-	1
76.30	[illegible]	0…32767	Hz	48
76.31	[illegible]	0…32767	Hz	48
76.32	[illegible]	0…32767	Hz	48

HI

[illegible]	[illegible]	[illegible]	[illegible]	[illegible]
76.41	[illegible]1 [illegible]	0…32767	Hz	25
76.42	[illegible]2 [illegible]	0…32767	Hz	25
76.43	[illegible]3 [illegible]	0…32767	Hz	25
76.55	[illegible]	0.00…12600.00	s	10.00
76.56	[illegible]	0.00…12600.00	s	10.00
76.57	PFC [illegible]	0.00…1000.00	s	0.00
76.58	PFC [illegible]	0.00…1000.00	s	0.00
76.59	PFC [illegible]	0.20…600.00	s	0.50
76.60	PFC [illegible]	0.00…1800.00	s	1.00
76.61	PFC [illegible]	0.00…1800.00	s	1.00
76.70	PFC [illegible]	0...13	-	[illegible] [0]

[illegible] [0]	DI2[3]	DI5[6]	2[9] [illegible]	[illegible] [12]
[illegible] [1]	DI3[4]	DI6[7]	3[10] [illegible]	[illegible] [13]
DI1[2]	DI4[5]	1[8] [illegible]	[illegible] [11]	[illegible] ...

76.71	PFC [illegible]	0.00…42949672.95	h	1.00
76.72	[illegible]	0.00…1000000.00	h	10.00
76.73	[illegible]	0.0…300.0	%	100.0
76.74	PFC [illegible]	[illegible] [0], [1] [illegible]	-	[illegible] [1]
76.81	PFC 1 [illegible]	0...10	-	PFC [illegible] [1] [illegible]

PFC [illegible] [0]	DI2[3]	DI5[6]	2[9] [illegible]
PFC [illegible] [1]	DI3[4]	DI6[7]	3[10] [illegible]
DI1[2]	DI4[5]	1[8] [illegible]	[illegible] ...

76.82	PFC 2 [illegible]	76.25 PFC 1 [illegible]	-	PFC [illegible] [1] [illegible]
76.83	PFC 3 [illegible]	76.25 PFC 1 [illegible]	-	PFC [illegible] [1] [illegible]
76.84	PFC 4 [illegible]	76.25 PFC 1 [illegible]	-	PFC [illegible] [1] [illegible]
76.95	[illegible]	[illegible] [0], [1],	-	[illegible] [0]
77 PFC [illegible]				
77.10	PFC [illegible]	0...5	-	[illegible] [0]

HI

[illegible]	[illegible]	[illegible]	[illegible]	[illegible]
	[illegible] [0]	PFC2 [illegible] [3]		
	PFC [illegible] [1]	PFC2 [illegible] [4]		
	PFC1 [illegible] [2]	PFC4 [illegible] [5]		
77.11	1 [illegible]	0.00…42949672.95	h	0.00
77.12	2 [illegible]	0.00…42949672.95	h	0.00
77.13	3 [illegible]	0.00…42949672.95	h	0.00
77.14	4 [illegible]	0.00…42949672.95	h	0.00
90 [illegible]				
90.03	[illegible]	-32768.00...32768.00	rpm	0.00
90.52	[illegible]	0...10000	ms	10
90.61	[illegible]	-2147483648...2147483648	-	1
90.62	[illegible]	-2147483648...2147483648	-	1
90.99	Load speed unit	0, 7, 41...43, 45	-	rpm
	No unit[0]	m/s[41]	ft/s[43]	
	rpm[7]	m/min[42]	ft/min[45]	
95 HW [illegible]				
95.01	[illegible]	Automatic/not selected[0], 380…415 V[2]	-	380...415 V[2]
95.02	[illegible]	[illegible] [0], [1]	-	[illegible] [0]
95.03	AC [illegible]	0…65535	V	0
95.04	[illegible]	Internal 24V[0], External 24V[1]	-	24V[0] [illegible]
95.15	HW [illegible]	0b0000…0b1111	-	0b0000
	Bit / [illegible]	**Bit** / [illegible]	**Bit** / [illegible]	
	0 / [illegible]	1 / ABB [illegible]	2…15 / [illegible]	
95.20	[illegible]	0b0000…0b1111	-	0b0000

HI

[illegible]	[illegible]	[illegible]	[illegible]	[illegible]

Bit	[illegible]	Bit	[illegible]	Bit	[illegible]
0	[illegible] 60 Hz [illegible]	13 [illegible]	du/dt [illegible]	15 [illegible]	[illegible]
1…12	[illegible]	14	Output contactor		

95.21	[illegible]	0b0000…0b1111	-	0b0000

Bit	[illegible]	Bit	[illegible]
0…5	[illegible]	7	[illegible]
6	[illegible]	8…15	[illegible]

95.26	Motor disconnect switch	[illegible] [0], [1]	-	[illegible] [0]
95.200	[illegible]	[illegible] [0], [illegible] [1]	-	[illegible] [1]
96 [illegible]				
96.01	[illegible]	[illegible] [0], [illegible] [1], [illegible] [2052]		[illegible] [0]
96.02	[illegible]	-	-	0
96.03	[illegible]	0b0000…0b1111	-	0b0000

Bit	[illegible]	Bit	[illegible]
0	[illegible]	10	Override lock
1	[illegible]	11	OEM [illegible] 1 [illegible]
2	[illegible]	12	OEM [illegible] 2 [illegible]
3	[illegible]	13	OEM [illegible] 3 [illegible]
4	[illegible]	14	[illegible]
5…9	[illegible]	15	[illegible]

96.04	[illegible]	-	-	[illegible] [0]

[illegible] [0]	PID[14]	SPFC[18]	Jigar[30]
ABB [illegible] [1]	[illegible] /PID[15]	[illegible] [19]	
3-wire[11]	PFC[16]	[illegible] [20] [illegible]	
[illegible]	ABB [illegible] [13]	[illegible] [17]	Torque control[28]

96.05	[illegible]	96.04 [illegible]	-	ABB [illegible] [1]

HI

96.06	[illegible]	0, 2, 8, 32, 62, 512, 1024, 34560	-	[illegible] [0]
	[illegible] [0]	[illegible] [32]	[illegible] [1024]	
	[illegible] [2]	[illegible] [62]	[illegible] [34560]	
	[illegible] [8]	[illegible] [512]		
96.07	[illegible]	[illegible] Save [0], [illegible]	-	[illegible] [0]
96.08	[illegible]	[illegible] [0], [illegible] [1]	-	[illegible] [0] [illegible]
96.10	[illegible]	0...11	-	[illegible] / [illegible] [0]
	[illegible] / [illegible] [0]	[illegible] [3]	3 I/O [illegible] [4] [illegible]	2 [illegible] [9] [illegible]
	[illegible] [1]	1 I/O [illegible] [4] [illegible]	4 I/O [illegible] [4] [illegible]	3 [illegible] [10] [illegible]
	[illegible] [2]	2 I/O [illegible] [4] [illegible]	1 [illegible] [8] [illegible]	4 [illegible] [11] [illegible]
96.11	[illegible] / [illegible]	0...5, 18...21	-	[illegible] [0] [illegible]
	[illegible] [0] [illegible]	2 [illegible] [3] [illegible]	1 [illegible] [18]	4 [illegible] [21]
	I/O [illegible] [1]	3 [illegible] [4] [illegible]	2 [illegible] [19]	
	1 [illegible] [2]	4 [illegible] [5] [illegible]	1 [illegible] [20]	
96.12	I/O [illegible] 1	0...7, 18...20, 24...26	-	[illegible] [0]
	[illegible] [0]	DI2[3]	DI5[6]	2 [illegible] [19]	2 [illegible] [25] [illegible]
	[illegible] [1]	DI3[4]	DI6[7]	3 [illegible] [20]	3 [illegible] [26] [illegible]
	DI1[2]	DI4[5]	[illegible] [18]	1 [illegible] [24] [illegible]	[illegible] ...
96.13	I/O [illegible] 2	96.12 I/O [illegible]	-	[illegible] [0]
96.16	[illegible]	0b0000...0b1111	-	0b0000
	Bit	[illegible]	**Bit**	[illegible]	**Bit**	[illegible]
	0	[illegible]	1	[illegible]	2	[illegible]
	3	[illegible]	4	[illegible]	5...15	[illegible]
96.20	[illegible]	0, 3, 6, 8, 9	-	[illegible] [8]
	[illegible] [0] [illegible]	FB [6] [illegible]	[illegible]	A [3] [illegible] [9] [illegible]	[illegible] [8] [illegible]

HI

[illegible]	[illegible]	[illegible]	[illegible]	[illegible]
96.24	Full days since 1st Jan 1980	1…59999	-	12055
96.25	Time in minutes within 24h	1…1439	min	0 min
96.26	Time in ms within one minute	0…59999	ms	0 ms
96.51	[illegible]	[illegible] [0], [1]	-	[illegible] [0]
96.78	550 compatibility mode	[illegible] [0], [1]	-	[illegible] [0]
96.100	[illegible]	10000000…99999999	-	-
96.101	[illegible]	10000000…99999999	-	-
96.102	[illegible]	0000h…FFFFh	-	0000h

ABB [illegible] [0]	Reserved[3...5]	[illegible] [8...10]	OEM [illegible] [13]
[illegible] [1]	Protect AP[6]	OEM [illegible] [11]	[illegible] [14...15]
[illegible] [2]	[illegible]	OEM [illegible] [12]	

97 [illegible]				
97.01	[illegible]	2 kHz[2], 4 kHz[4], 8 kHz[8] 12 kHz[12] R0 .R2 [illegible]	-	4 kHz[4]
97.02	[illegible]	1.5 kHz[1.5], 2 kHz[2], 4 kHz[4], 8 kHz[8], 12 kz[12] 1.5 kHz R0..R2 [illegible]	-	1.5 kHz[1]
97.03	[illegible]	0…200	%	100
97.04	[illegible]	-4…50	%	-2
97.05	[illegible]	[illegible] [0], [illegible] [1], [illegible]	-	[illegible] [0]
97.08	[illegible]	0.0...1600.0	%	0.0
97.13	IR [illegible]	0.00 … 50.00	%	3.50
97.20	U/F [illegible]	[illegible] [0], [illegible] [20]	-	[illegible] [0]
97.48	UDC stabilizer	-	-	[illegible] [0]

[illegible] [0]	Enabled mild[100]	Enabled strong[500]
Enabled min[50]	Enabled medium[300]	Enabled max[800]

97.49	[illegible]	0...200	%	0
97.94	IR [illegible]	1.0...200.0	%	80.0
97.135	UDC ripple	0.0...200.0	V	0.0

HI

[illegible]	[illegible]	[illegible]	[illegible]	[illegible]
98 [illegible]				
98.01	[illegible]	[illegible] [0], [illegible] [1]	-	[illegible] [0]
98.02	Rs [illegible]	0.00000…0.50000	p.u.	0.00000 p.u
98.03	Rr [illegible]	0.00000…0.50000	p.u.	0.00000 p.u
98.04	Lm [illegible]	0.00000…10.00000	p.u.	0.00000 p.u
98.05	SigmaL [illegible]	0.00000…1.00000	p.u.	0.00000 p.u
98.09	Rs [illegible]	0.00000…100.00000	ohm	0.00000 ohm
98.10	Rr [illegible]	0.00000…100.00000	ohm	0.00000 ohm
98.11	Lm [illegible]	0.00…100000.00	mH	0.00 mH
98.12	SigmaL [illegible]	0.00…100000.00	mH	0.00 mH
99 [illegible]				
99.03	[illegible]	[illegible] [0] [illegible]	-	[illegible] [0] [illegible]
99.04	[illegible]	[illegible] [1] [illegible] [0],	-	[illegible] [1]
99.06	[illegible]	0.0 … 32767.0	A	1.8
99.07	[illegible]	0.0 … 32767.0	V	400.0
99.08	[illegible]	0.00 … 500.00	Hz	50.00
99.09	[illegible]	0 … 30000	rpm	1430
99.10	[illegible]	0.00...10000.00	kW or hp	0.75
99.11	[illegible]	0.00 … 1.00	-	0.00
99.12	[illegible]	0.000…4000000.000 N·m or 0.000…2950248.597 lb·ft	N·m	0.000
99.13	[illegible]	0...3, 7 [illegible]	-	[illegible] [0]
	[illegible] [0]	[illegible] [2]	[illegible] [4], [7] [illegible]	
	[illegible] [1]	[illegible] [3]	[illegible] [6]	
99.14	[illegible]	[illegible]	-	[illegible] [0]
99.15	[illegible]	0…1000	-	0
99.16	[illegible]	U V W[0], U W V[1]	-	U V W[0]

HI

तकनीकी डेटा

[illegible]-[illegible]

[illegible] CE, UL [illegible], [illegible]

[illegible]

IEC रेटिंग्स

ACS560	Nominal In	[illegible]	[illegible]									
			[illegible]			[illegible]			[illegible]			
	I_{1N}	I_{max}	I_N	P_N		I_{Ld} ([illegible])		P_{Ld}	I_{Hd} ([illegible])		P_{Hd}	
	A	A	A	kW	Hp	A	kW	Hp	A	kW	Hp	
3 [illegible] U_N = 400 V (380...415 V)												
02A6-4	2.6	3.2	2.6	0.75	1	2.5	0.75	1	1.8	0.55	0.75	R0
03A3-4	3.3	4.7	3.3	1.1	1.5	3.1	1.1	1.5	2.6	0.75	1	R0
04A0-4	4	5.9	4	1.5	2	3.8	1.5	2	3.3	1.1	1.5	R0
05A6-4	5.6	7.2	5.6	2.2	3	5.3	3	3	4	1.5	2	R0
07A2-4	7.2	10.1	7.2	3	4	6.8	2.2	4	5.6	2.2	3	R0
09A4-4	9.4	13	9.4	4	5	8.9	4	5	7.2	3	4	R0
12A6-4	12.6	16.9	12.6	5.5	7.5	12	5.5	7.5	9.4	4	5	R1
017A-4	17	22.7	17	7.5	10	16.2	7.5	10	12.6	5.5	7.5	R2
025A-4	25	30.6	25	11	15	23.8	11	15	17	7.5	10	R2
033A-4	33	44.3	33	15	20	30.4	15	20	24.6	11	15	R3
039A-4	39	56.9	39	18.5	25	36.1	18.5	25	31.6	15	20	R3
046A-4	46	67.9	46	22	30	42.8	22	30	37.7	18.5	25	R3
062A-4	62	76	62	30	40	58	30	40	44.6	22	30	R4
073A-4	73	104	73	37	50	68.4	37	50	61	30	40	R4
088A-4	88	122	88	45	60	82.7	45	60	72	37	50	R5
106A-4	106	148	106	55	75	99.8	55	75	87	45	60	R5
145A-4	145	178	145	75	100	138	75	100	105	55	75	R6
169A-4	169	247	169	90	120	161	90	120	145	75	100	R7
206A-4	206	287	206	110	150	196	110	150	169	90	120	R7
246A-4	246	350	246	132	180	234	132	180	206	110	150	R8
293A-4	293	418	293	160	215	278	160	215	246 [1]	132	180	R8

[1] Continuous current when its used in heavy duty applications, allows 130% of IHd for 1 minute every 10 minutes at 40 °C.

HI

(IEC) [illegible]

uR और aR फ्यूज़

ACS560 [illegible]	1) [illegible]	[illegible]	uR [illegible] aR				
			[illegible] I_N	I^2t	[illegible]	[illegible] IEC 60269	[illegible]
	A	A	A	A^2s	V		
3 [illegible] U_N = 400 V (380...480 V)							
02A6-4	48	4.2	25	125	690	170M2694	00
03A3-4	48	5.3	25	125	690	170M2694	00
04A0-4	80	6.4	32	275	690	170M2695	00
05A6-4	80	9.0	32	275	690	170M2695	00
07A2-4	128	11.5	40	490	690	170M2696	00
09A4-4	128	15.0	40	1000	690	170M2696	00
12A6-4	200	20.2	50	1800	690	170M2697	00
017A-4	256	27.2	63	3600	690	170M2698	00
025A-4	400	40.0	80	1450	690	170M2699	00
033A-4	170	32.0	63	1450	690	170M1565	000
039A-4	170	38.0	63	2550	690	170M1565	000
046A-4	280	45.0	80	4650	690	170M1566	000
062A-4	380	62.0	100	8500	690	170M1567	1
073A-4	480	73.0	125	16000	690	170M1568	000
088A-4	480	88.0	160	15000	690	170M1569	1
106A-4	700	106.0	200	28500	690	170M3815	1
145A-4	1000	145.0	250	46500	690	170M3816	1
169A-4	1280	169.0	315	68500	690	170M3817	1
206A-4	1520	206.0	350	105000	690	170M3818	1
246A-4	2050	246.0	450	145000	690	170M5809	2
293A-4	2200	293.0	500	275000	690	170M5810	2

1) [illegible]

gG फ्यूज़

ACS560 [illegible]	1) [illegible]	[illegible]	gG (IEC 60269)				
			[illegible] I_N	I^2t	[illegible]	ABB [illegible] IEC 60269	[illegible]
	A	A	A	A^2s	V		
3 [illegible] U_N = 400 V (380...480 V)							
02A6-4	48	4.2	6	110	500	OFAF000H6	000
03A3-4	48	5.3	6	110	500	OFAF000H6	000
04A0-4	80	6.4	10	360	500	OFAF000H10	000
05A6-4	80	9.0	10	360	500	OFAF000H10	000
07A2-4	128	11.5	16	740	500	OFAF000H16	000
09A4-4	128	15.0	16	740	500	OFAF000H16	000

HI

ACS560	1)		gG (IEC 60269)				
			I_N	I^2t		ABB	IEC 60269
	A	A	A	A^2s	V		
12A6-4	200	20.2	25	2500	500	OFAF000H25	000
017A-4	256	27.2	32	4500	500	OFAF000H32	000
025A-4	320	40.0	50	15500	500	OFAF000H50	000
033A-4	320	33.0	40	7700	500	OFAF000H40	000
039A-4	400	39.0	50	16000	500	OFAF000H50	000
046A-4	500	45.0	63	20100	500	OFAF000H63	000
062A-4	800	62.0	80	37500	500	OFAF000H80	000
073A-4	1000	73.0	100	65000	500	OFAF000H100	000
088A-4	1000	88.0	100	65000	500	OFAF000H100	000
106A-4	1300	106.0	125	103000	500	OFAF000H125	00
145A-4	1700	145.0	160	185000	500	OFAF000H160	00
169A-4	3300	169.0	250	600000	500	OFAF000H250	0
206A-4	5500	206.0	315	710000	500	OFAF000H315	1
246A-4	6400	246.0	355	920000	500	OFAF000H355	1
293A-4	7800	293.0	425	1300000	500	OFAF000H425	2

1) [illegible]

HI

gR फ्यूज़

ACS560	1)		gG (IEC 60269)				
			I_N	I^2t		ABB	IEC 60269
	A	A	A	A^2s	V		
3-[illegible] 380...480 V							
02A6-4	48	4.2	25	125	690	170M2694	00
03A3-4	48	5.3	25	125	690	170M2694	00
04A0-4	80	6.4	32	275	690	170M2695	00
05A6-4	80	9.0	32	275	690	170M2695	00
07A2-4	128	11.5	40	490	690	170M2696	00
09A4-4	128	15.0	40	490	690	170M2696	00
12A6-4	200	20.2	50	1000	690	170M2697	00
017A-4	256	27.2	63	1800	690	170M2698	00
025A-4	400	40.0	80	3600	690	170M2699	00
033A-4	170	32.0	63	1450	690	170M1565	000
039A-4	170	38.0	63	1450	690	170M1565	000
046A-4	280	45.0	80	2550	690	170M1566	000
062A-4	380	62	100	4650	690	170M1567	000
073A-4	480	73	125	8500	690	170M1568	000
088A-4	480	88	160	16000	690	170M1569	000
106A-4	700	106	200	15000	690	170M3815	1

AC 550V	1)		gG (IEC 60269)				
			I_N	I^2t		ABB	IEC 60269
	A	A	A	A^2s	V		
145A-4	1000	145	250	28500	690	170M3816	1
169A-4	1280	169	315	46500	690	170M3817	1
206A-4	1520	206	350	68500	690	170M3818	1
246A-4	2050	246	450	105000	690	170M5809	2
293A-4	2200	293	500	145000	690	170M5810	2

1)

HI

[illegible]

ACS560 [illegible]	Framesize	IEC [1]		US	
		Cu [illegible]	Al [illegible] [2]	Cu [illegible]	Al [illegible] [3]
		mm²	mm²	AWG/kcmil	AWG/kcmil
3-phase U_N = 400 V (380…480 V)					
02A6-4	R0	3 × 1.5 + 1.5	-	16	-
03A3-4	R0	3 × 1.5 + 1.5	-	16	-
04A0-4	R0	3 × 1.5 + 1.5	-	16	-
05A6-4	R0	3 × 1.5 + 1.5	-	16	-
07A2-4	R0	3 × 1.5 + 1.5	-	16	-
09A4-4	R0	3 × 2.5 + 2.5	-	14	-
12A6-4	R1	3 × 2.5 + 2.55	-	14	-
017A-4	R2	3 × 2.5 + 2.5	-	14	-
025A-4	R2	3 × 6 + 6	-	10	-
033A-4	R3	3 × 10 + 10	-	8	-
039A-4	R3	3 × 10 + 10	-	8	-
046A-4	R3	3 × 16 + 16	-	6	-
062A-4	R4	3 × 25 + 16	3 × 35	4	-
073A-4	R4	3 × 35 + 16	3 × 50	2	-
088A-4	R5	3 × 35 + 16	3 × 70	2	-
106A-4	R5	3 × 50 + 25	3 × 70	1/0	-
145A-4	R6	3 × 95 + 50	3 × 120	3/0	-
169A-4	R7	3 × 120 + 70	3 × 150	250 MCM	-
206A-4	R7	3 × 150 + 70	3 × 240	300 MCM	-
246A-4	R8	2 × (3 × 70 + 35)	2 × (3 × 95)	2 × 2/0	-
293A-4	R8	2 × (3 × 95 + 50)	2 × (3 × 120)	2 × 3/0	-

1) [illegible] (60204-1, 60364-5-52 / 2001) [illegible]
2) [illegible]
3) [illegible]

[illegible]

Frame	[illegible]				
	IP20				
	W	D	H1	H2	[illegible]
	mm	mm	mm	mm	kg
R0	73	207	223	x	1.6
R1	97	207	223	x	1.9
R2	172	207	220	x	2.9
R3	203	229	490	x	14.9

HI

Frame	[illegible]				
	IP20				
	W	D	H1	H2	[illegible]
	mm	mm	mm	mm	kg
R4	203	257	636	x	19
R5	203	296	719	600	28.3
R6	252	369	722	548	42.4
R7	284	371	839	600	54
R8	300	394	943	680	69

Standard frames

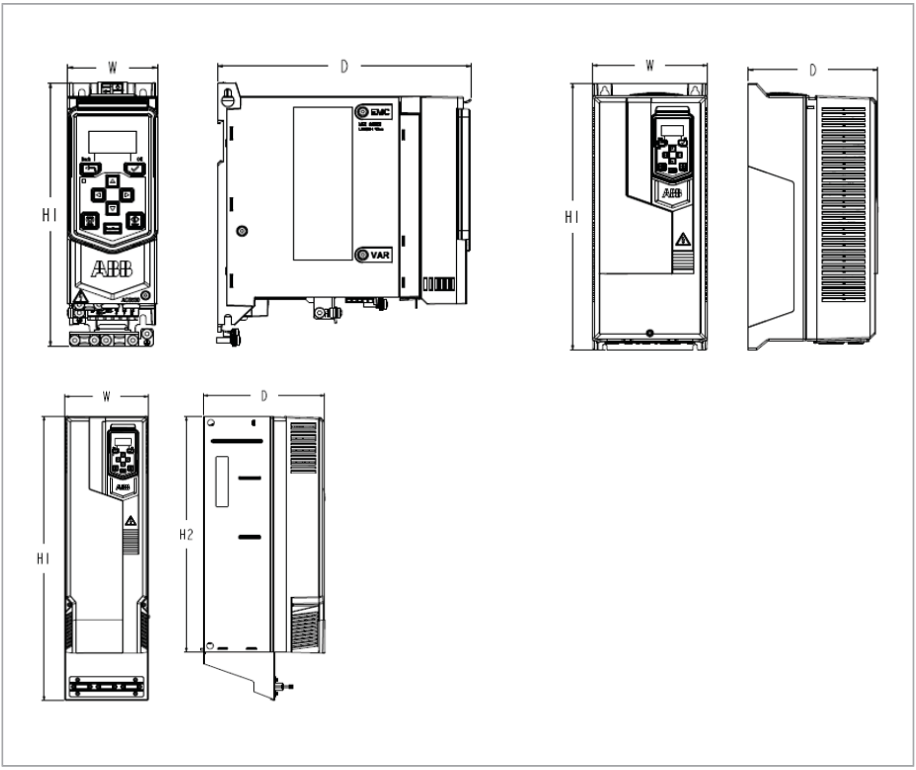

[illegible]	
IP20	
H1	[illegible]
H2	[illegible]
W	[illegible]
D	[illegible]

[illegible]

HI

Energy efficiency data (ecodesign)

Energy efficiency data according to IEC-61800-9-2 is available from the ecodesign tool (https://ecodesign.drivesmotors.abb.com).

[illegible]

[illegible]

HI

EN 60204-1:2006 + AC:2010	[illegible] - [illegible] - [illegible]
IEC/EN 60529:1992 + A2: 2013	[illegible]
EN 61000-3-12:2011	[illegible]
IEC/EN 61800-3:2004 + A1:2012	[illegible]
IEC/EN 61800-5-1:2007	[illegible]
IEC 61800-9-2:2017	Adjustable speed electrical power drive systems – Part 9-2: Ecodesign for power drive systems, motor starters, power electronics and their driven applications – Energy efficiency indicators for power drive systems and motor starters
IEC 60664-1:2007	[illegible]

CE [illegible]

[illegible]

यूरोपीय कम वोल्टेज नदिश का अनुपालन

Power and productivity
for a better world™

EU Declaration of Conformity

We

Manufacturer: ABB India Limited.
Address: Plot No 5 & 6,2nd Phase,
Peenya Industrial Area
Bangalore, 560058, India.
Phone: +91 80 22949359

declare under our sole responsibility that the following product:

Frequency converter

ACS560-01(frame sizes R0-R8)

is in conformity with the relevant requirements of European Union Directives, which have been notified in this single declaration that consists of individual Declarations of conformity, provided that the equipment is selected, installed and used according to given instructions.

The harmonised standards and other standards, which have been applied, are specified on the individual Declarations of conformity for particular EU directive.

EU Directives		
Low Voltage Directive	2014/35/EU	LVD
EMC Directive	2014/30/EU	EMC
Machinery Directive	2006/42/EC	MD
RoHS Directive	2011/65/EU	ROHS

Individual EU Declaration of Conformity:

Product	LVD	EMC	MD	ROHS
ACS560-01	3AXD10000549782		3AXD10000549855	3AXD10000550609

Bangalore, 04 Oct 2016

Manufacturer representative: Madhusudhan A R

Vice President

ABB India Limited.

3AXD10000549832

1 (1)

HI

The compliance with the European Low Voltage Directive has been verified according to standard EN 61800-5-1:2007. The declaration of conformity (3AXD10000549832) is available on the Internet. See section *Document library on the Internet* on the inside of the back cover.

यूरोपीय **EMC** नदिश का अनुपालन

The EMC Directive defines the requirements for immunity and emissions of electrical equipment used within the European Union. The EMC product standard (EN 61800- 3:2004 + A1:2012) covers requirements stated for drives.

The declaration (3AXD10000549782) is available on the Internet. See section *Document library on the Internet* on the inside of the back cover.

यूरोपीय **ROHS II** नदिश **2011/65/EU** के साथ अनुपालन

RoHS II [redacted]609) [redacted]

यूरोपीय मशीनरी नदिश 2006/42/EC द्वतिीय संस्करण - जून 2010 का अनुपालन

EU Declaration of Conformity

Machinery Directive 2006/42/EC

We
Manufacturer: ABB India Limited
Address: Plot No 5 &6 , 2nd Phase , Peenya Industrial Area ,Bangalore,560058, India
Phone: +91 80 22949359

Declare under our sole responsibility that the following product:

Frequency converter

ACS560 (frames R0-R8)

identified with serial numbers beginning with 9

with regard to the safety function

Safe torque-off

is in conformity with all the relevant safety component requirements of the EU Machinery Directive 2006/42/EC, when the listed safety function is used for safety component functionality.

The following harmonized standards have been applied:

EN 61800-5-2:2007	Adjustable speed electrical power drive systems – Part 5-2: Safety requirements - Functional
EN 62061:2005 + AC:2010 + A1:2013 + A2:2015	Safety of machinery – Functional safety of safety-related electrical, electronic and programmable electronic control systems
EN ISO 13849-1:2015	Safety of machinery – Safety-related parts of control systems. Part 1: General principles for design
EN ISO 13849-2:2012	Safety of machinery – Safety-related parts of the control systems. Part 2: Validation
EN 60204-1:2018	Safety of machinery – Electrical equipment of machines – Part 1: General requirements

1/2

3AXD10000549832 Rev. 3
IMS template code: 3AFE011906, Rev. C

HI

The following other standard has been applied:

IEC 61508:2010, parts 1-2/3	Functional safety of electrical / electronic / programmable electronic safety-related systems
IEC 61800-5-2:2016	Adjustable speed electrical power drive systems – Part 5-2: Safety requirements - Functional

The product referred in this declaration of conformity fulfils the relevant provisions of other European Union directives which are notified in a single EU declaration of conformity 3AXD10000549832.

Person authorized to compile the technical file 3AXD10000549485 :
Name and address: Jussi Vesti, Hiomotie 13, 00380 Helsinki, Finland

HI

Bangalore, 27 May 2020

Signed for and on behalf of:

AR Madhusudhan
Vice President, MODP
ABB India Limited

Laxmikantha shenoy
Manager , Prodcut Engineering
ABB India Limited

3AXD10000549832 Rev. 3
IMS template code: 3AFE011906, Rev. C

(3AXD10000549855)

डायग्नोस्टिक

[illegible]

(hex)	[illegible]	[illegible]	[illegible]
64FF	[illegible]	[illegible]	[illegible]
A2B1	[illegible]	[illegible]	[illegible]
A2B3	[illegible]	[illegible]	[illegible]
A2B4	[illegible]	[illegible]	Check motor and motor cable for cabling errors. Check motor and motor cable (including phasing and delta/star connection). Check for an earth fault in motor or motor cables by measuring the insulation resistances of motor and motor cable. See chapter *Electrical installation*, section *Checking the insulation of the assembly* in the *Hardware manual* of the drive. Check there are no power factor correction capacitors or surge absorbers in motor cable. For frames R6 to R8, check the auxiliary code.
		Short circuit in the upper transistor of the U-phase.	
		Short circuit in the lower transistor of the U-phase.	
		Short circuit in the upper transistor of the V-phase.	
		Short circuit in the lower transistor of the V-phase.	
		Short circuit in the upper transistor of the WU-phase.	
		Short circuit in the lower transistor of the W-phase.	
		DC capacitor short circuit.	
		[illegible] For frames R6 and R7.	
A2BA	IGBT [illegible]	IGBT [illegible]	[illegible]
A3A1	DC [illegible]	DC [illegible]	[illegible]
A3A2	DC [illegible]	DC [illegible]	[illegible]
A3AA	DC [illegible]	DC [illegible]	[illegible]
A490	[illegible]	[illegible]	[illegible]
A491	1 [illegible]	1 [illegible]	[illegible]
A492	2 [illegible]	2 [illegible]	[illegible]
A4A0	[illegible]	[illegible]	[illegible]
A4A1	IGBT [illegible]	IGBT [illegible]	[illegible]
A4A9	[illegible]	[illegible]	[illegible]

HI

(Hex)	/ ( )		
A4B0			
A4B1		IGBT-	
A4F6	IGBT	IGBT	
A580	PU		04
A581			(XY2): (2), (1), (1 2), (3 3)
A582		0001 – 1 0002 – 2	( )
A590	HW	0001 - HW	
A591	HW	HW	
	0000		
	0001	HW	
A5A0			04 .
A5EA			ABB
A5EB	PU		ABB
A5ED	DC		ABB
A5EE	DFF		ABB
A5EF	PU		ABB
A5F0			
A5F1			ABB
A5F2	hw		ABB
A682			96.07 (XXXX.XX.XX.XX) " (1 2 2 2)
A684			ABB
A6A4			98 99
	1 -		5 -
	2 -		6 -
	3 - 1		7 -
	4 -		
A6A5		99	99

(hex)	[illegible]	[illegible]	[illegible]
A6A6	[illegible]	[illegible]	[illegible]
A6A7	[illegible]	[illegible]	
A6B0	[illegible]	[illegible] 96.102 [illegible] 96.02	
A6B1	[illegible]	[illegible] 96.101 [illegible] 96.101 [illegible]	96.101 [illegible]
A6D1	FBA A [illegible]	PLC [illegible]	PLC [illegible]
A6E5	AI [illegible]	[illegible]	[illegible]
A6E6	ULC [illegible]	[illegible]	[illegible] "ZZZZ" [illegible]
	0000	[illegible]	[illegible]
	0002	[illegible]	[illegible]
	0003	[illegible]	
A7A1	[illegible]	[illegible]	[illegible]
A7A5	[illegible]	[illegible]	[illegible]
A7AC	I/O [illegible]	[illegible]	I / O [illegible]
AFF5	[illegible]	[illegible]	[illegible]
AFF8	[illegible]	[illegible]	[illegible]
AFFE	[illegible]	[illegible]	70.02 [illegible]
A780	[illegible]	[illegible]	[illegible]
A783	[illegible]	[illegible]	[illegible] Adjust the parameters used for the motor overload function. (35.51…35.53, 35.55, 35.56).
A784	Motor disconnect	All three output phases are disconnected from motor.	Check if parameter 95.26 enables the use of a motor disconnect switch. If not, check the following: • All switches between drive and motor are closed. • All cables between drive and motor are connected and secured. If no issue was detected and drive output was actually connected to motor, contact ABB.
A791	[illegible]	[illegible]	[illegible]
A792	[illegible]	[illegible]	[illegible]
A793	BR [illegible]	[illegible]	[illegible]

HI

(Hex)	/ ([illegible])	[illegible]	[illegible]
	1 - [illegible] 2 - [illegible]	3 - [illegible]	
A794	BR [illegible]	[illegible]	[illegible]
A79C	BC IGBT [illegible]	IGBT [illegible]	[illegible]
A7AB	I/O [illegible]	I/O [illegible] /	[illegible] I/O [illegible] // [illegible]
A7A2	[illegible]	[illegible]	[illegible] 44 [illegible] [illegible]
A7C1	FBA A [illegible]	A [illegible]	[illegible]
A7CE	EFB [illegible]	(EFB) [illegible]	[illegible] 29, 30 31 [illegible]
A7EE	[illegible]	PC [illegible]	PC [illegible]
A88F	[illegible]	[illegible]	[illegible]
A8A0	AI [illegible]	[illegible]	[illegible]
	1 - AI1 [illegible] 0002 – AI1 [illegible]	0003 – AI2 [illegible] 0004 – AI2 [illegible]	
A8A1	RO [illegible]	[illegible]	[illegible]
	0001 - 1 [illegible] 0002 - 2 [illegible]	0003 - 3 [illegible]	
A8A2	RO [illegible]	[illegible]	[illegible]
	0001 - 1 [illegible] 0002 - 2 [illegible]	0003 - 3 [illegible]	
A8B0	1 [illegible]	1 [illegible]	([illegible]) [illegible]
A8B1	2 [illegible]	2 [illegible]	([illegible]) [illegible]
A8B2	3 [illegible]	3 [illegible]	([illegible]) [illegible]
A8B3	4 [illegible]	4 [illegible]	([illegible]) [illegible]
A8B4	5 [illegible]	5 [illegible]	([illegible]) [illegible]
A8B5	6 [illegible]	6 [illegible]	([illegible]) [illegible]
A8B6	[illegible]	[illegible]	[illegible]

HI

(hex)	[illegible]	[illegible]	[illegible]
A8BE	ULC [illegible]	[illegible]	[illegible] .
	0001	[illegible] ULC [illegible] ULC [illegible] [illegible]	[illegible]
	0002	[illegible] ULC [illegible] ULC [illegible] [illegible]	[illegible]
	0003	[illegible] ULC [illegible] ULC [illegible] 4 [illegible]	[illegible]
	0004	[illegible] ULC [illegible] ULC [illegible] 5 [illegible]	[illegible]
A8BF	ULC [illegible]	[illegible]	[illegible] ULC [illegible]
	0001	[illegible] ULC [illegible] ULC [illegible] [illegible]	[illegible]
	0002	[illegible] ULC [illegible] ULC [illegible] [illegible]	[illegible]
	0003	[illegible] ULC [illegible] ULC [illegible] 4 [illegible]	[illegible]
	0004	[illegible] ULC [illegible] ULC [illegible] 5 [illegible]	[illegible]
A8C0	ULC [illegible]	[illegible]	[illegible] ULC [illegible]
A8C5	ULC [illegible]	[illegible]	[illegible] ULC [illegible]
A8C6	ULC [illegible]	[illegible]	[illegible] ULC [illegible]
A981	[illegible]	[illegible]	[illegible]
A982	[illegible]	[illegible]	[illegible]
A983	[illegible]	[illegible]	[illegible]
A984	[illegible]	[illegible]	[illegible]
A985	[illegible]	[illegible]	[illegible]
A991	[illegible]	[illegible]	[illegible] \x49 34 63 [illegible]
AF88	[illegible]	[illegible]	[illegible] \x49 34 63 [illegible]
AF90	Speed controller autotuning	The speed controller autotune routine did not complete successfully.	Check the auxiliary code (format XXXX YYYY). “YYYY” indicates the problem (see actions for each code below).
	0000	The drive was stopped before the autotune routine finished.	Repeat autotune until successful.

HI

(hex)	/ [illegible]	[illegible]	[illegible]
	0001	The drive was started but was not ready to follow the autotune command.	Make sure the prerequisites of the autotune run are fulfilled. See section Before activating the autotune routine (page 46) in firmware manual.
	0002	Required torque reference could not be reached before the drive reached maximum speed.	Decrease torque step (parameter 25.38) or increase speed step (25.39).
	0003	Motor could not accelerate/decelerate to maximum/minimum speed.	Increase torque step (parameter 25.38) or decrease speed step (25.39).
	0005	Motor could not decelerate with full autotune torque.	Decrease torque step (parameter 25.38) or speed step (25.39).
AFAA	[illegible]	[illegible]	[illegible]
AFE1	[illegible]	[illegible]	[illegible]
AFE2	[illegible]	[illegible]	
AFE9	[illegible]	[illegible]	[illegible]
AFF5	[illegible]	[illegible]	[illegible]
AFEB	[illegible]	[illegible]	[illegible]
AFEC	[illegible]	95.04 [illegible]	[illegible] 95.04
AFED	[illegible]	120 [illegible]	[illegible] 20.12
AFF6	[illegible]	[illegible]	[illegible]
B5F6	[illegible]	[illegible]	[illegible]
B5A0	STO [illegible]	STO [illegible]	[illegible]
D501	PFC [illegible]	PFC [illegible]	[illegible] 76.81...76.84 [illegible]
D502	[illegible]	PFC [illegible]	[illegible] 76.81...76.84
D503	VSD PFC [illegible]	[illegible]	[illegible] 76.81...76.84
FA90	STo [illegible]	[illegible]	[illegible]

HI

[illegible]

(hex)	Fault / Aux. code aux code visible only on assistant control panel and drive composer))	[illegible]	[illegible]
1080	[illegible]	[illegible]	[illegible]
1081	[illegible]	[illegible]	[illegible]
2281	[illegible]	[illegible]	[illegible]
2310	[illegible]	Output current has exceeded internal fault limit. In addition to an actual overcurrent situation, this fault may also be caused by an earth fault or supply phase loss.	Check the auxiliary code (format XXXYYYZZ): “ZZ” indicates the overcurrent type and phase that triggered the fault: bit 7 =1 indicates SW overcurrent bit 0: Phase U bit 1: Phase V bit 2: Phase W For example: Aux code 0x83 indicates SW overcurrent of phase U and V. If there is no aux code, this indicates that hardware overcurrent is triggered. Check motor load. Check acceleration times in parameter group 23 Speed reference ramp (speed control), 26 Torque reference chain (torque control) or 28 Frequency reference chain (frequency control). Also check parameters 46.01 Speed scaling, 46.02 Frequency scaling and 46.03 Torque scaling. Check motor and motor cable (including phasing and delta/star connection). Check there are no contactors opening and closing in motor cable. Check that the start-up data in parameter group 99 corresponds to the motor rating plate. Check that there are no power factor correction capacitors or surge absorbers in motor cable. Check for an earth fault in motor or motor cables by measuring the insulation resistances of motor and motor cable. See chapter Electrical installation, section Checking the insulation of the assembly in the Hardware manual of the drive.

HI

(hex)	Fault / Aux. code aux code visible only on assistant control panel and drive composer))		
2330			
2340			Check motor and motor cable for cabling errors. Check there are no power factor correction capacitors or surge absorbers in motor cable. For frames R6 to R8, check the auxiliary code.
	0001	Short circuit in the upper transistor of the U-phase.	
	0002	Short circuit in the lower transistor of the U-phase.	
	0004	Short circuit in the upper transistor of the V-phase.	
	0008	Short circuit in the lower transistor of the V-phase.	
	0010	Short circuit in the upper transistor of the W-phase.	
	0020	Short circuit in the lower transistor of the W-phase.	
	0040	DC capacitor short circuit.	
	0080	For frames R6 and R7.	
2381	IGBT	IGBT	
2392	BU		ABB
3130			
3181			
3210	DC	DC	
3220	DC	DC	
3291	BU DC	DC	(XXXX YYZZ) "XXX" YY "" (8:4,..,800: 12)
3381			
4110			
4210	IGBT	IGBT	
4290			
42F1	IGBT	IGBT	

HI

(hex)	Fault / Aux. code aux code visible only on assistant control panel and drive composer))		
4310			
4380		IGBT-	
4981	1	1	35.02 1
4982	2	2	35.03 2
4991		CPTC -02 • •	
5080			
5081		0001 - 1 0002 - 2	( )
5089	SMT	SMT /	/ SMT
5090	STO	STO	ABB
5091			95.04 .
5092	PU		ABB
5093	ID		Cycle power to the drive. You may have to repeat this.
5094			ABB
5095			ABB
5096	hw		ABB
5098	I/O	I/O	
5681	PU		95.04
5682			
5690	PU		ABB
5691	ADC		ABB
5692	PU		ABB
5693	DEF		ABB
5695			
5697			
5698	PU		

HI

(hex)	Fault / Aux. code aux code visible only on assistant control panel and drive composer))		
50A0			
6181	FPGA	FPGA	9K08
6306	FBA A	A	ABB
6481			9K08
6487			
64A3			
	8006		
	8007		
	8008		
	8009		
	800A	( )	
64A1			
64A4			ABB
64A6			
64B1	SSW	(SSW)	SSW

1 - OS	5 - WoRm
2 -	6 - FPGA
3 -	7 -
4 -	

64B2			
64B3			
64E1			9K08
6581			9K07
6591	/		

HI

(hex)	Fault / Aux. code aux code visible only on assistant control panel and drive composer))	[illegible]	[illegible]
65A1	FBA A [illegible]	[illegible]	PLC [illegible] 50 (FBA) 51 FBA A [illegible] .
6681	EFB [illegible] (Programmable fault: 58.14 Communication loss action)	(EFB) [illegible]	[illegible] (EIA-485) X5 29, 30 31 [illegible]
6682	EFB [illegible]	(EFB) [illegible]	[illegible]
6683	EFB [illegible]	(EFB) [illegible]	[illegible] 58 [illegible]
6684	EFB [illegible]	(EFB) [illegible]	[illegible]
		EFB [illegible]	
6685	EFB 2 [illegible]	EFB [illegible]	[illegible]
6686	EFB 3 [illegible]		
6882	32- [illegible]	[illegible]	[illegible]
6885	[illegible]	[illegible]	[illegible]
7081	[illegible]	PC [illegible]	[illegible]
7082	I/O [illegible]	[illegible]	IO [illegible]
7085	[illegible]	[illegible]	[illegible]
7086	I/O A [illegible]	[illegible]	AI [illegible]
7087	I/O module configuration	I/O module configuration not supported or illegal.	Check the auxiliary code. See actions for each code below.
	0001	S1/S2 DIP switch position on BIO-01 has changed after power up.	Reboot control unit either by cycling the power or through parameter 96.08 Control board boot to activate new DIP switch position.
	0002	S1/S2 DIP switch positions are such that DO1 would be in both S1 and S2 pins. This is not a supported combination.	Change S1/S2 DIP switch positions to a supported combination, see parameter 05.99 BIO-01 DIP switch status.
71A2	[illegible]	[illegible]	[illegible]
71A5	[illegible]	[illegible]	[illegible]

HI

(hex)	Fault / Aux. code aux code visible only on assistant control panel and drive composer))	[illegible]	[illegible]
7100	[illegible]	[illegible]	[illegible]
7121	[illegible]	[illegible]	[illegible]
7122	[illegible]	[illegible]	[illegible] (35.53, 35.55, 35.56)
7181	[illegible]	[illegible]	[illegible]
7183	BR [illegible]	[illegible]	[illegible]
7184	[illegible]	[illegible]	[illegible]
7191	BC [illegible]	IGBT [illegible]	[illegible]
7192	BC IGBT [illegible]	IGBT [illegible]	[illegible]
71A3	[illegible]	[illegible]	[illegible]
7310	[illegible]	[illegible]	[illegible]
73B0	[illegible]	[illegible]	[illegible] (23.15 Off1 [illegible] 23.23, Off3 [illegible])
73F0	[illegible]	[illegible]	[illegible]
	00FA	[illegible]	[illegible]
	Other	-	[illegible]
7510	FBA A [illegible] FBA A [illegible])	[illegible]	[illegible] (FBA) 51 FBA A 52 FBA A [illegible] FBA A [illegible]
8001	ULC [illegible]	[illegible]	3704 ULC [illegible]
	001	3711 ULC [illegible] 3712 ULC [illegible]	[illegible]
	002	3712 ULC [illegible] 3713 ULC [illegible]	[illegible]
	003	3713 ULC [illegible] 3714 ULC [illegible] 4 [illegible]	[illegible]
	004	3714 ULC [illegible] 3715 ULC [illegible] 5 [illegible]	[illegible]
8002	ULC [illegible]	[illegible]	3703 ULC [illegible] .
	001	3711 ULC [illegible] 3712 ULC [illegible]	[illegible]
	002	3712 ULC [illegible] 3713 ULC [illegible]	[illegible]

HI

(hex)	Fault / Aux. code aux code visible only on assistant control panel and drive composer))		
	003	[illegible]	[illegible]
	004	[illegible]	[illegible]
8009	[illegible]	[illegible]	[illegible]
80A0	AI [illegible]	[illegible]	[illegible]
	1 - AI1 [illegible] 2 - AI1 [illegible] 3 - AI2 [illegible] 4 - AI2 [illegible]		
80B0	1 [illegible]	[illegible]	[illegible]
80B1	2 [illegible]	[illegible]	[illegible]
80B2	3 [illegible]	[illegible]	[illegible]
80B3	4 [illegible]	[illegible]	[illegible]
80B4	5 [illegible]	[illegible]	[illegible]
80B5	6 [illegible]	[illegible]	[illegible]
9081	1 [illegible]	[illegible]	[illegible]
9082	2 [illegible]	[illegible]	[illegible]
9083	3 [illegible]	[illegible]	[illegible]
9084	4 [illegible]	[illegible]	[illegible]
9085	5 [illegible]	[illegible]	[illegible]
A2A1	[illegible]	[illegible]	[illegible]
FA81	1 [illegible]	[illegible]	[illegible]
FA82	2 [illegible]	[illegible]	
FF61	ID [illegible]	[illegible]	[illegible] • [illegible] • [illegible] • [illegible] • [illegible] [illegible]

HI

(hex)	Fault / Aux. code aux code visible only on assistant control panel and drive composer))		
	1 -	(D	
	2 -	C - (	
	3 -	D - (	
	4 -	E...10 -	
	5...8 -	11 - (	
	9 - (	12 - D	
	A - (	13 - (	
FF63	STO	SW	
FF81	FB A	A	PLC
FF8E	EFB		PLC

HI

Further information

Product and service inquiries

Address any inquiries about the product to your local ABB representative, quoting the type designation and serial number of the unit in question. A listing of ABB sales, support and service contacts can be found by navigating to www.abb.com/searchchannels.

Product training

For information on ABB product training, navigate to new.abb.com/service/training.

Providing feedback on ABB manuals

Your comments on our manuals are welcome. Navigate to new.abb.com/drives/manuals-feedback-form.

Document library on the Internet

You can find manuals and other product documents in PDF format on the Internet at www.abb.com/drives/documents.

a11 (frozen)
PDF-A5
Created 2022-12-22, 11:32:36

www.abb.com/drives

3AXD50000042620J

© Copyright 2022 ABB. All rights reserved.
Specifications subject to change without notice.

3AXD50000042620 Rev J (EN)
2022-08-16