ABB DRIVES FOR HVAC

ACH580-31 drives

Hardware manual

ACH580-31 drives

Hardware manual

Table of contents

1. Safety instructions

4. Mechanical installation

6. Electrical installation – IEC

10. Start-up

3AXD50000037066 Rev G
EN
Original instructions
EFFECTIVE: 2023-10-03

Table of contents

1 Safety instructions

Contents of this chapter 17
Use of warnings and notes 17
General safety in installation, start-up and maintenance 18
Electrical safety in installation, start-up and maintenance 20
Electrical safety precautions 20
Additional instructions and notes 21
Printed circuit boards 21
Grounding 22
General safety in operation 23
Additional instructions for permanent magnet motor drives 23
Safety in installation, start-up, maintenance 23
Safety in operation 24

2 Introduction to the manual

Contents of this chapter 25
Target audience 25
Purpose of the manual 25
Categorization by frame size and option code 25
Quick installation, commissioning and operation flowchart 26
Terms and abbreviations 27
Related documents 29

3 Operation principle

Contents of this chapter 31
Operation principle 31
Active braking function (option +N8056) 32
DC voltage boost function 32
Benefits of the DC voltage boost 33
Impact of DC voltage boost on input current 33
DC connection 33
Layout 34
Overview of power and control connections 36
Control panel 37
Control panel door mounting kits 38
Control panel mounting platform cover (option +J424) 38
Remote control panel, panel bus 38
Type designation label 40

Type designation key 41
Basic code 41
Option codes 41

4 Mechanical installation

Contents of this chapter 45
Cabinet installation (option +P940) 45
Flange mounting (option +C135) 45
Safety 46
Examining the installation site 47
Installation positions 47
Free space requirements 48
Necessary tools 49
Moving the drive 50
Unpacking and examining delivery 50
Installing the drive vertically 57
Installing the drive vertically side by side 59
Installing the drive horizontally 59

5 Guidelines for planning the electrical installation

Contents of this chapter 61
Limitation of liability 61
North America 61
Selecting the main supply disconnecting device 61
Implementing a fast switch over between the power line and generator 62
Selecting the main contactor 62
Examining the compatibility of the motor and drive 63
Protecting the motor insulation and bearings 63
Requirements tables 63
Requirements for ABB motors, P_n < 100 kW (134 hp) 64
Requirements for ABB motors, $P_n \geq$ 100 kW (134 hp) 65
Requirements for non-ABB motors, P_n < 100 kW (134 hp) 66
Requirements for non-ABB motors, $P_n \geq$ 100 kW (134 hp) 67
Abbreviations 68
Availability of d*u*/d*t* filter and common mode filter by drive type 68
Additional requirements for explosion-safe (EX) motors 68
Additional requirements for ABB motors of types other than M2_, M3_, M4_, HX_ and AM_ 68
Additional requirements for braking applications 68
Additional requirements for the regenerative and low harmonics drives 68
Additional requirements for ABB high-output and IP23 motors 69

Additional requirements for non-ABB high-output and IP23 motors ... 69
Additional data for calculating the rise time and the peak line-to-line voltage ... 70
Additional note for sine filters ... 72
Selecting the power cables ... 72
General guidelines ... 72
Typical power cable sizes ... 72
Power cable types ... 73
Preferred power cable types ... 73
Alternate power cable types ... 74
Not allowed power cable types ... 75
Additional guidelines – North America ... 75
Metal conduit ... 76
Power cable shield ... 76
Grounding requirements ... 77
Additional grounding requirements – IEC ... 78
Additional grounding requirements – UL (NEC) ... 79
Selecting the control cables ... 79
Shielding ... 79
Signals in separate cables ... 79
Signals that can be run in the same cable ... 79
Relay cable ... 80
Control panel to drive cable ... 80
PC tool cable ... 80
Routing the cables ... 80
General guidelines – IEC ... 80
General guidelines – North America ... 81
Continuous motor cable shield/conduit and metal enclosure for equipment on the motor cable ... 82
Separate control cable ducts ... 83
Protecting the drive, input power cable, motor and motor cable in short circuit situations and against thermal overload ... 83
Protecting the drive and the input power cable in short-circuits ... 83
Circuit breakers ... 84
Protecting the motor and motor cable in short-circuits ... 84
Protecting the motor cables against thermal overload ... 84
Protecting the motor against thermal overload ... 85
Protecting the motor against overload without thermal model or temperature sensors ... 85
Implementing a motor temperature sensor connection ... 85
Connecting a motor temperature sensor to the drive through an option module ... 86
Protecting the drive against ground faults ... 87
Residual current device compatibility ... 87

Implementing the emergency stop function 87
Implementing the Safe torque off function 88
Implementing the power loss ride-through function 88
Using power factor compensation capacitors with the drive 88
Using a safety switch between the drive and the motor 89
Implementing an ATEX-certified motor thermal protection 89
Controlling a contactor between drive and motor 89
Implementing a bypass connection 90
Example bypass connection 91
Switching the motor power supply from drive to direct-on-line 92
Switching the motor power supply from direct-on-line to drive 92
Protecting the contacts of relay outputs 92
Limiting relay output maximum voltages at high installation altitudes 93

6 Electrical installation – IEC

Contents of this chapter 95
Safety 95
Required tools 95
Grounding the motor cable shield at the motor end 95
Measuring the insulation 96
Measuring the insulation resistance of the drive 96
Measuring the insulation resistance of the input power cable 96
Measuring the insulation resistance of the motor and motor cable 96
Measuring the insulation resistance of the brake resistor circuit 97
Grounding system compatibility check 97
EMC filter 97
Ground-to-phase varistor 98
When to disconnect EMC filter or ground-to-phase varistor: TN-S, IT, corner-grounded delta and midpoint-grounded delta systems and TT systems 98
Identifying the grounding system of the electrical power network 101
Disconnecting integrated EMC filter and ground-to-phase varistor – frame R3 102
Disconnecting integrated EMC filter and ground-to-phase varistor – frame R6 103
Disconnecting integrated EMC filter and ground-to-phase varistor – frame R8 104
Connecting the power cables 105
Connection diagram 105
Connection procedure 106
R8 power cable connection if you detach the cable connectors 114
Connecting the control cables 115
Connection diagram 115
Connection procedure 115

Installing option modules ... 120
Option slot 2 (I/O extension modules) ... 120
Option slot 1 (fieldbus adapter modules) ... 121
Wiring the optional modules ... 121
Reinstalling cover(s) ... 122
Connecting a PC ... 123
Connecting a remote panel, or chaining one panel to several drives ... 123

7 Electrical installation – North America (NEC)

Contents of this chapter ... 125
Safety ... 125
Required tools ... 125
Measuring the installation ... 126
Grounding system compatibility check ... 126
Connecting the power cables ... 126
Connection diagram ... 126
Connection procedure ... 127
Connecting the control cables ... 134
Connection diagram ... 134
Connection procedure ... 134
Installing optional modules ... 138
Reinstalling cover(s) ... 139
Connecting a PC ... 140
Connecting a remote panel, or chaining one panel to several drives ... 140

8 Control unit

Contents of this chapter ... 141
Layout ... 142
Default I/O connection diagram ... 143
Additional information on the control connections ... 145
Embedded EIA-485 fieldbus connection ... 145
Connecting motor temperature sensors to the drive ... 146
PNP configuration for digital inputs (X2 & X3) ... 147
NPN configuration for digital inputs (X2 & X3) ... 147
Connection for obtaining 0…10 V from analog output 2 (AO2) ... 148
Connection examples of two-wire and three-wire sensors to analog input (AI2) ... 148
DI5 as frequency input ... 148
Safe torque off (X4) ... 149
Technical data ... 150

9 Installation checklist

Contents of this chapter ... 155

Checklist 155

10 Start-up

Contents of this chapter 159
Reforming the capacitors 159
Start-up procedure 159

11 Maintenance

Contents of this chapter 161
Maintenance intervals 161
Description of symbols 161
Recommended maintenance intervals after start-up 161
Cleaning the exterior of the drive 163
Cleaning the heatsink 164
Fans 164
Replacing the main cooling fan, frame R3 165
Replacing the main cooling fan, frame R6 166
Replacing the main cooling fan, frame R8 167
Replacing the auxiliary cooling fan of frame R3, IP55 (UL Type 12) and +C135 IP21 (UL Type 1) 168
Replacing the auxiliary cooling fan, frame R6 169
Replacing the second auxiliary cooling fan, IP55 (UL Type 12) frame R6 170
Replacing the auxiliary cooling fan, frame R8 171
Replacing the second internal auxiliary cooling fan, IP55 (UL Type 12) frame R8 172
Replacing the auxiliary cooling fan in the IP55 (UL Type 12) cover, frame R8 173
Capacitors 175
Reforming the capacitors 175
Control panel 175
Drive LEDs 175
Functional safety components 176

12 Technical data

Contents of this chapter 177
Electrical ratings 177
IEC ratings 177
UL (NEC) ratings 179
Definitions 180
Sizing 180
Deratings 181
Cumulative deratings 181

Surrounding air temperature derating 181
Altitude derating 183
Switching frequency derating 184
Output voltage boost derating 187
Fuses (IEC) 188
aR fuses DIN 43653 stud-mount 188
aR fuses DIN 43620 blade style 189
gG fuses DIN 43620 blade style 190
Calculating the short-circuit current of the installation 190
Calculation example 190
Fuses (UL) 192
Circuit breakers (IEC) 195
ABB miniature and molded case circuit breakers 195
Circuit breakers (UL) 196
Dimensions, weights and free space requirements 199
Free space requirements 199
Package dimensions and weights 200
Losses, cooling data and noise 201
Cooling air flow and heat dissipation for flange mounting (option +C135) 204
Terminal and entry data for the power cables 207
IEC 207
UL 207
Terminal and entry data for the control cables 208
IEC 208
UL 208
Typical power cables 209
Electrical power network specification 212
Motor connection data 214
CCU-24 control unit connection data 215
Efficiency 215
Energy efficiency data (ecodesign) 216
Protection classes 216
Colors 216
Materials 217
Drive 217
Package materials for small wall-mounted drives and converter modules 217
Package materials for large wall-mounted drives and converter modules 217
Package materials for options, accessories and spare parts 217
Materials of manuals 217
Disposal 218
Applicable standards 218
Ambient conditions 219

Storage conditions ... 221
Markings ... 221
Compliance with the EN 61800-3:204 + A1:2012 ... 222
Definitions ... 222
Category C2 ... 223
Category C3 ... 223
Category C4 ... 224
UL checklist ... 225
Declarations of conformity ... 226
Design lifetime expectancy ... 226
Disclaimers ... 226
Generic disclaimer ... 226
Cyber security disclaimer ... 226

13 Dimension drawings

R3, IP21 (UL Type 1) ... 230
R3 – Option +B056 (IP55, UL Type 12) ... 231
R6, IP21 (UL Type 1) ... 232
R6 – Option +B056 (IP55, UL Type 12) ... 233
R8, IP21 (UL Type 1) ... 234
R8 – Option +B056 (IP55, UL Type 12) ... 235

14 The Safe torque off function

Contents of this chapter ... 237
Description ... 237
Compliance with the European Machinery Directive and the UK Supply of Machinery (Safety) Regulations ... 238
Wiring ... 239
Connection principle ... 239
Single ACH580-31 drive, internal power supply ... 239
Single ACH580-31 drive, external power supply ... 240
Wiring examples ... 240
Single ACH580-31 drive, internal power supply ... 240
Single ACH580-31 drive, external power supply ... 241
Multiple ACH580-31 drives, internal power supply ... 242
Multiple ACH580-31 drives, external power supply ... 243
Activation switch ... 244
Cable types and lengths ... 244
Grounding of protective shields ... 244
Operation principle ... 245
Start-up including validation test ... 246
Competence ... 246
Validation test reports ... 246
Validation test procedure ... 246

Use 248
Maintenance 250
Competence 250
Fault tracing 251
Safety data 252
Terms and abbreviations 254
TÜV certificate 255
Declarations of conformity 256

15 Resistor braking

Contents of this chapter 259
Operation principle 259
Planning the braking system 259
Selecting the drive, brake chopper and brake resistor 259
Selecting a custom brake resistor 260
Selecting and routing the brake resistor cables 261
Minimizing electromagnetic interference 261
Maximum cable length 262
Selecting the installation location for the brake resistors 262
Protecting the system against thermal overload 262
Protecting the system in fault situations 262
Protecting the resistor cable against short-circuits 263
Mechanical installation 263
Electrical installation 263
Measuring the installation 263
Connection diagram 264
Connection procedure 264
Start-up 264
Technical data 265
Ratings 265
Terminals and cable entry data 265

16 Common mode, d*u*/d*t* and sine filters

Contents of this chapter 267
Common mode filters 267
d*u*/d*t* filters 267
When is a d*u*/d*t* filter needed? 267
d*u*/d*t* filter types 268
Description, installation and technical data of the filters 269
Sine filters 269

17 CAIO-01 bipolar analog I/O adapter module

Contents of this chapter 271

Product overview ... 271
Layout ... 272
Mechanical installation ... 273
Necessary tools ... 273
Unpacking and examining the delivery ... 273
Installing the module ... 273
Electrical installation ... 273
Necessary tools ... 273
Wiring ... 273
Start-up ... 274
Setting the parameters ... 274
Diagnostics ... 275
LEDs ... 275
Technical data ... 275
Isolation areas ... 276
Dimension drawings ... 277

18 CHDI-01 115/230 V digital input extension module

Contents of this chapter ... 279
Product overview ... 279
Layout and connection examples ... 280
Mechanical installation ... 281
Necessary tools ... 281
Unpacking and examining the delivery ... 281
Installing the module ... 281
Electrical installation ... 281
Necessary tools ... 281
Wiring ... 281
Start-up ... 281
Setting the parameters ... 281
Parameter setting example for relay output ... 282
Fault and warning messages ... 282
Technical data ... 282
Dimension drawing ... 283

19 CMOD-01 multifunction extension module (external 24 V AC/DC and digital I/O)

Contents of this chapter ... 285
Product overview ... 285
Layout and example connections ... 286
Mechanical installation ... 287
Necessary tools ... 287
Unpacking and examining the delivery ... 287
Installing the module ... 287

Electrical installation 287
Necessary tools 288
Wiring 288
Start-up 288
Setting the parameters 288
Diagnostics 289
Faults and warning messages 289
LEDs 289
Technical data 290
Dimension drawing 291

20 CMOD-02 multifunction extension module (external 24 V AC/DC and isolated PTC interface)

Contents of this chapter 293
Product overview 293
Layout and example connections 294
Mechanical installation 295
Necessary tools 295
Unpacking and examining the delivery 295
Installing the module 295
Electrical installation 295
Necessary tools 295
Wiring 296
Start-up 296
Setting the parameters 296
Diagnostics 296
Faults and warning messages 296
LEDs 296
Technical data 296
Dimension drawing 298

Further information

1

Safety instructions

Contents of this chapter

This chapter contains the safety instructions which you must obey when you install, start-up, operate and do maintenance work on the drive. If you ignore the safety instructions, injury, death or damage can occur.

Use of warnings and notes

Warnings tell you about conditions which can cause injury or death, or damage to the equipment. They also tell you how to prevent the danger. Notes draw attention to a particular condition or fact, or give information on a subject.

The manual uses these warning symbols:

WARNING!
Electricity warning tells about hazards from electricity which can cause injury or death, or damage to the equipment.

WARNING!
General warning tells about conditions other than those caused by electricity, which can cause injury or death, or damage to the equipment.

WARNING!
Electrostatic sensitive devices warning tells you about the risk of electrostatic discharge which can cause damage to the equipment.

General safety in installation, start-up and maintenance

These instructions are for all personnel who do work on the drive.

WARNING!
Obey these instructions. If you ignore them, injury or death, or damage to the equipment can occur.

- Keep the drive in its package until you install it. After unpacking, protect the drive from dust, debris and moisture.
- Use the required personal protective equipment: safety shoes with metal toe cap, safety glasses, protective gloves and long sleeves, etc. Some parts have sharp edges.
- Lift a heavy drive with a lifting device. Use the designated lifting points. See the dimension drawings.
- Be careful when handling a tall module. The module overturns easily because it is heavy and has a high center of gravity. Whenever possible, secure the module with chains. Do not leave an unsupported module unattended especially on a sloping floor.

- Beware of hot surfaces. Some parts, such as heatsinks of power semiconductors, and brake resistors, remain hot for a while after disconnection of the electrical supply.
- Vacuum clean the area around the drive before the start-up to prevent the drive cooling fan from drawing dust inside the drive.
- Make sure that debris from drilling, cutting and grinding does not go into the drive during installation. Electrically conductive debris inside the drive can cause damage or malfunction.
- Make sure that there is sufficient cooling. See the technical data.
- Before you connect voltage to the drive, make sure that all covers are in place. Do not remove the covers when voltage is connected.

- Before you adjust the drive operation limits, make sure that the motor and all driven equipment can operate throughout the set operation limits.
- Before you activate the automatic fault reset or automatic restart functions of the drive control program, make sure that no dangerous situations can occur. These functions reset the drive automatically and continue operation after a fault or supply break. If these functions are activated, the installation must be clearly marked as defined in IEC/EN/UL 61800-5-1, subclause 6.5.3, for example, "THIS MACHINE STARTS AUTOMATICALLY".
- The maximum number of drive power-ups is five in ten minutes. Too frequent power-ups can damage the charging circuit of the DC capacitors.
- If you have connected safety circuits to the drive (for example, Safe torque off or emergency stop), validate them at start-up. See separate instructions for the safety circuits.
- Beware of hot air exiting from the air outlets.
- Do not cover the air inlet or outlet when the drive is running.

Note:

- If you select an external source for the start command and it is on, the drive will start immediately after fault reset unless you configure the drive for pulse start. See the firmware manual.
- If the drive is in remote control mode, you cannot stop or start the drive with the control panel.
- Only authorized persons are allowed to repair a malfunctioning drive.

Electrical safety in installation, start-up and maintenance

Electrical safety precautions

These electrical safety precautions are for all personnel who do work on the drive, motor cable or motor.

WARNING!
Obey these instructions. If you ignore them, injury or death, or damage to the equipment can occur.

If you are not a qualified electrical professional, do not do installation or maintenance work.

Do these steps before you begin any installation or maintenance work.

1. Clearly identify the work location and equipment.
2. Disconnect all possible voltage sources. Make sure that re-connection is not possible. Lock out and tag out.
   - Open the main disconnecting device of the drive.
   - If you have a permanent magnet motor connected to the drive, disconnect the motor from the drive with a safety switch or by other means.
   - Disconnect all dangerous external voltages from the control circuits.
   - After you disconnect power from the drive, always wait 5 minutes to let the intermediate circuit capacitors discharge before you continue.
3. Protect any other energized parts in the work location against contact.
4. Take special precautions when close to bare conductors.
5. Measure that the installation is de-energized. Use a quality voltage tester.
   - Before and after you measure the installation, verify the operation of the voltage tester on a known voltage source.
   - Make sure that the voltage between the drive input power terminals (L1, L2, L3) and the grounding (PE) busbar is zero.
   - Make sure that the voltage between the drive output terminals (T1/U, T2/V, T3/W) and the grounding (PE) busbar is zero.

     Important! Repeat the measurement also with the DC voltage setting of the tester. Measure between each phase and ground. There is a risk of dangerous DC voltage charging due to leakage capacitances of the motor circuit. This voltage can remain charged for a long time after the drive power-off. The measurement discharges the voltage.
   - Make sure that the voltage between the drive DC terminals (UDC+ and UDC-) and the grounding (PE) terminal is zero.

     Note: If cables are not connected to the drive DC terminals, measuring the voltage from the DC terminal screws can give incorrect results.

6. Install temporary grounding as required by the local regulations.
7. Ask for a permit to work from the person in control of the electrical installation work.

Additional instructions and notes

WARNING!
Obey these instructions. If you ignore them, injury or death, or damage to the equipment can occur.

If you are not a qualified electrical professional, do not do installation or maintenance work.

- Make sure that the electrical power network, motor/generator, and environmental conditions agree with the drive data.
- Do not do insulation or voltage withstand tests on the drive.
- If you have a cardiac pacemaker or other electronic medical device, keep away from the area near motor, drive, and the drive power cabling when the drive is in operation. There are electromagnetic fields present which can interfere with the function of such devices. This can cause a health hazard.

Note:

- When the drive is connected to the input power, the motor cable terminals and the DC bus are at a dangerous voltage.
  The brake circuit, including the brake chopper and brake resistor (if installed) are also at a dangerous voltage.
  After disconnecting the drive from the input power, these remain at a dangerous voltage until the intermediate circuit capacitors have discharged.
- External wiring can supply dangerous voltages to the relay outputs of the control units of the drive.
- The Safe torque off function does not remove the voltage from the main and auxiliary circuits. The function is not effective against deliberate sabotage or misuse.

Printed circuit boards

WARNING!
Use a grounding wristband when you handle printed circuit boards. Do not touch the boards unnecessarily. The boards contain components sensitive to electrostatic discharge.

Grounding

These instructions are for all personnel who are responsible for the grounding of the drive.

WARNING!
Obey these instructions. If you ignore them, injury or death, or equipment malfunction can occur, and electromagnetic interference can increase.

If you are not a qualified electrical professional, do not do grounding work.

- Always ground the drive, the motor and adjoining equipment. This is necessary for the personnel safety.
- Make sure that the conductivity of the protective earth (PE) conductors is sufficient and that other requirements are met. See the electrical planning instructions of the drive. Obey the applicable national and local regulations.
- When using shielded cables, make a 360° grounding of the cable shields at the cable entries to reduce electromagnetic emission and interference.
- In a multiple-drive installation, connect each drive separately to the protective earth (PE) busbar of the power supply.

General safety in operation

These instructions are for all personnel that operate the drive.

WARNING!
Obey these instructions. If you ignore them, injury or death, or damage to the equipment can occur.

- If you have a cardiac pacemaker or other electronic medical device, keep away from the area near motor, drive, and the drive power cabling when the drive is in operation. There are electromagnetic fields present which can interfere with the function of such devices. This can cause a health hazard.
- Give a stop command to the drive before you reset a fault. If you have an external source for the start command and the start is on, the drive will start immediately after the fault reset, unless you configure the drive for pulse start. See the firmware manual.
- Before you activate the automatic fault reset or automatic restart functions of the drive control program, make sure that no dangerous situations can occur. These functions reset the drive automatically and continue operation after a fault or supply break. If these functions are activated, the installation must be clearly marked as defined in IEC/EN/UL 61800-5-1, subclause 6.5.3, for example, "THIS MACHINE STARTS AUTOMATICALLY".

Note:

- The maximum number of drive power-ups is five in ten minutes. Too frequent power-ups can damage the charging circuit of the DC capacitors. If you need to start or stop the drive, use the control panel keys or commands through the I/O terminals of the drive.
- If the drive is in remote control mode, you cannot stop or start the drive with the control panel.

Additional instructions for permanent magnet motor drives

Safety in installation, start-up, maintenance

These are additional warnings concerning permanent magnet motor drives. The other safety instructions in this chapter are also valid.

WARNING!
Obey these instructions. If you ignore them, injury or death, or damage to the equipment can occur.

If you are not a qualified electrical professional, do not do installation or maintenance work.

- Do not do work on the drive when a rotating permanent magnet motor is connected to it. A rotating permanent magnet motor energizes the drive including its input and output power terminals.

Before installation, start-up and maintenance work on the drive:

- Stop the drive.
- Disconnect the motor from the drive with a safety switch or by other means.
- If you cannot disconnect the motor, make sure that the motor cannot rotate during work. Make sure that no other system, like hydraulic crawling drives, can rotate the motor directly or through any mechanical connection like belt, nip, rope, etc.
- Do the steps in section Electrical safety precautions (page 20).
- Install temporary grounding to the drive output terminals (T1/U, T2/V, T3/W). Connect the output terminals together as well as to the PE.

During the start-up:

- Make sure that the motor cannot run overspeed, for example, driven by the load. Motor overspeed causes overvoltage that can damage or destroy the capacitors in the intermediate circuit of the drive.

Safety in operation

WARNING!
Make sure that the motor cannot run overspeed, for example, driven by the load. Motor overspeed causes overvoltage that can damage or destroy the capacitors in the intermediate circuit of the drive.

2

Introduction to the manual

Contents of this chapter

This chapter describes the intended audience and contents of the manual. It contains a flowchart of steps in examining the delivery, installing and commissioning the drive. The flowchart refers to chapters/sections in this manual and other manuals.

Target audience

This manual is intended for people who plan the installation, install, commission and do maintenance work on the drive, or create instructions for the end user of the drive concerning the installation and maintenance of the drive.

Read the manual before you work on the drive. You are expected to know the fundamentals of electricity, wiring, electrical components and electrical schematic symbols.

Purpose of the manual

This manual provides information needed for planning the installation, installing, and servicing the drive.

Categorization by frame size and option code

The frame size identifies information which concerns only a certain frame size of the drive. The frame size is shown on the type designation label. All frame sizes are listed in the technical data.

The option code (A123) identifies information which concerns only a certain optional selection. The options included in the drive are listed on the type designation label.

Quick installation, commissioning and operation flowchart

Task	See
Identify the frame of your drive: R3, R6 or R8.	Type designation label (page 40)
Plan the electrical installation and acquire the accessories needed (cables, fuses, etc.). Check the ratings, required cooling air flow, input power connection, compatibility of the motor, motor connection, and other technical data.	Guidelines for planning the electrical installation (page 61) Technical data (page 177)
Unpack and check the drive.	Unpacking and examining delivery (page 50)
If the drive will be connected to an IT (ungrounded) system or corner-grounded delta system, check that the integrated EMC filter and round-to-phase varistor are disconnected.	Grounding system compatibility check (page 97)
Install the drive on a wall.	Mechanical installation (page 45)
Route the cables.	Routing the cables (page 80)
Measure the insulation of the input cable and the motor and the motor cable.	Electrical installation – IEC (page 95) or Electrical installation – North America (NEC) (page 125)
Connect the power cables.	Electrical installation – IEC (page 95) or Electrical installation – North America (NEC) (page 125)

Task	See
Connect the control cables.	Electrical installation – IEC (page 95) or Electrical installation – North America (NEC) (page 125)
Check the installation.	Installation checklist (page 155)
Commission the drive.	Firmware manual Quick start-up guide for the drive

Terms and abbreviations

Term	Description
ACH-AP-H	Assistant control panel with Hand-Off-Auto functionality
ACH-AP-W	Assistant control panel with Hand-Off-Auto functionality and Bluetooth interface
BACnet™	A network protocol (Building Automation and Control Networks)
Brake chopper	Conducts the surplus energy from the intermediate circuit of the drive to the brake resistor when necessary. The chopper operates when the DC link voltage exceeds a certain maximum limit. The voltage rise is typically caused by deceleration (braking) of a high inertia motor.
Brake resistor	Dissipates the drive surplus braking energy conducted by the brake chopper to heat
CAIO-01	CAIO-01 optional bipolar analog input and unipolar analog output extension module
Capacitor bank	The capacitors connected to the DC link
CCA-01	Configuration adapter
CCU	Type of control unit
CDPI-01	Communication adapter module
CHDI-01	115/230 V digital input extension module
CMOD-01	Multifunction extension module (external 24 V AC/DC and digital I/O extension)
CMOD-02	Multifunction extension module (external 24 V AC/DC and isolated PTC interface)
Control unit	The part in which the control program runs.
CPTC-02	Multifunction extension module (external 24 V and ATEX/UKEX-certified PTC interface)

Term	Description
DC link	DC circuit between line-side converter and motor-side converter
DC link capacitors	Energy storage which stabilizes the intermediate circuit DC voltage
DPMP	Optional mounting platform for door mounting of control panel
DPMP-01	Mounting platform for control panel (flush mounting)
DPMP-02, DPMP-03	Mounting platform for control panel (surface mounting)
DPMP-EXT	Optional mounting platform for door mounting of control panel
Drive	Frequency converter for controlling AC motors
EFB	Embedded fieldbus
EMC	Electromagnetic compatibility
FBIP-21	BACnet/IP adapter module
FCAN	Optional CANopen® adapter module
FCNA-01	Optional ControlNet™ adapter module
FDNA-01	Optional DeviceNet™ adapter module
FECA-01	Optional EtherCAT® adapter module
FENA-21	Optional Ethernet adapter module for EtherNet/IP™, Modbus TCP and PROFINET IO protocols, 2-port
FEPL-02	Optional Ethernet POWERLINK adapter module
FLON-01	Optional LonWorks® adapter module
FPBA-01	Optional PROFIBUS DP® adapter module
Frame, frame size	Physical size of the drive or power module
IGBT	Insulated gate bipolar transistor
Intermediate circuit	DC circuit between rectifier and inverter
Inverter	Converts direct current and voltage to alternating current and voltage.
Line-side converter	Converts alternating voltage to direct voltage for the intermediate DC link of the drive
LonWorks®	A networking platform
Motor-side converter	Converts intermediate DC link current to AC current for the motor
NETA-21	Remote monitoring tool
Network control	With fieldbus protocols based on the Common Industrial Protocol (CIP™), such as DeviceNet and Ethernet/IP, denotes the control of the drive using the Control Supervisor and AC/DC drive objects of the ODVA AC/DC Drive Profile. For more information, see www.odva.org.
Parameter	In the drive control program, user-adjustable operation instruction to the drive, or signal measured or calculated by the drive. In some (for example fieldbus) contexts, a value that can be accessed as an object. For example, variable, constant, or signal.
PLC	Programmable logic controller
PTC	Positive temperature coefficient
Rectifier	Converts alternating current and voltage to direct current and voltage
STO	Safe torque off (IEC/EN 61800-5-2)

Related documents

You can find manuals on the Internet. See below for the relevant code/link. For more documentation, go to www.abb.com/drives/documents.

	ACH580-31 manuals

3

Operation principle

Contents of this chapter

This chapter briefly describes the operation principle and construction of the drive.

Operation principle

The ACH580-31 is a ultra-low harmonic drive for controlling asynchronous AC induction motors, permanent magnet motors in open loop control and synchronous reluctance motors.

The drive includes a line-side converter and a motor-side converter. The parameters and signals for both converters are combined into one primary user program.

The figure below shows the simplified main circuit diagram of the drive.

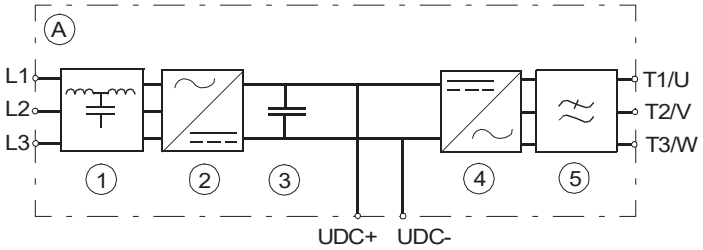

A	Drive
1	LCL filter
2	Line-side converter
3	DC link. DC circuit between the line-side converter and motor-side converter.
4	Motor-side converter
5	Common mode filter

The line-side converter rectifies three phase AC current to direct current for the intermediate DC link of the drive. The intermediate DC link further supplies the motor-side converter that runs the motor.

Both converters consist of six insulated gate bipolar transistors (IGBT) with free wheeling diodes. The content of AC voltage and current harmonics is low. The LCL filter suppresses the harmonics further.

The line-side and motor-side converters have their own control programs. The parameters of both programs can be viewed and changed using a control panel.

Active braking function (option +N8056)

The line-side converter with active braking function can transfer regenerated energy (up to 50% of the rated power) back to the electrical power system. The active braking function is available with option code +N8056 and licensing.

Example applications:

- tunnel ventilation can achieve quick reversing without brake chopper
- catching up a spinning load and reversing in flying start.

DC voltage boost function

The ultra low harmonic drives can boost their DC link voltage. In other words, they can increase the operating voltage of the DC link from its default value.

To take the DC voltage boost function in use, adjust the user DC voltage reference value in parameter 94.22.

Benefits of the DC voltage boost

- possibility to supply nominal voltage to the motor even when the supply voltage of the drive is below the motor nominal voltage level
- compensation of voltage drop due to output filter, motor cable or input supply cables
- increased motor torque in the field weakening area (ie, when the drive operates the motor in the speed range above the motor nominal speed)
- possibility to use a motor with higher nominal voltage than the actual supply voltage of the drive. Example: A drive that is connected to 415 V can supply 460 V to a 460 V motor.

Impact of DC voltage boost on input current

When the DC voltage is boosted, the drive can be drawing more input current than what is rated in the type designation label. Derating is needed:

- when the motor is running at the field weakening area or close to it and the drive is running at nominal load or close to it
- when the situation lasts long
- when the boost is more than 10%.

The rise of the input current can heat the fuses. If there are brief low line situations when the drive boosts voltage significantly, there is a risk for nuisance fuse blowing of smaller AC line fuses.

For more information, refer to ACH580-31, ACQ580-31, ACH580-34 and ACQ580-34 drives product note on DC voltage boost (3AXD50000769407 [English]).

DC connection

You can connect an external brake chopper to the drive via the DC terminals. See Resistor braking (page 259).

Layout

IP21 (UL Type 1 R6)	IP55 (UL Type 12) option +B056, R6
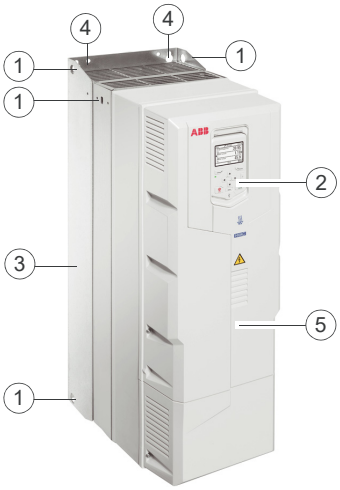	
UL Type 12 R6	IP20 (UL Open Type) option +P940, R3

1	Lifting eyes (2 pcs in frame R3, 6 pcs in frames R6 and R8)	5	Front cover
2	Control panel	6	Control panel behind the control panel cover
3	Heatsink	7	Hood in frames R6 and R8
4	Mounting points (4 pcs)		

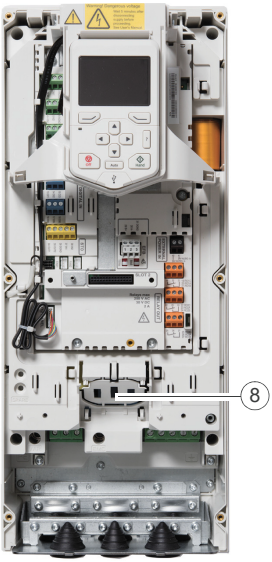

R3

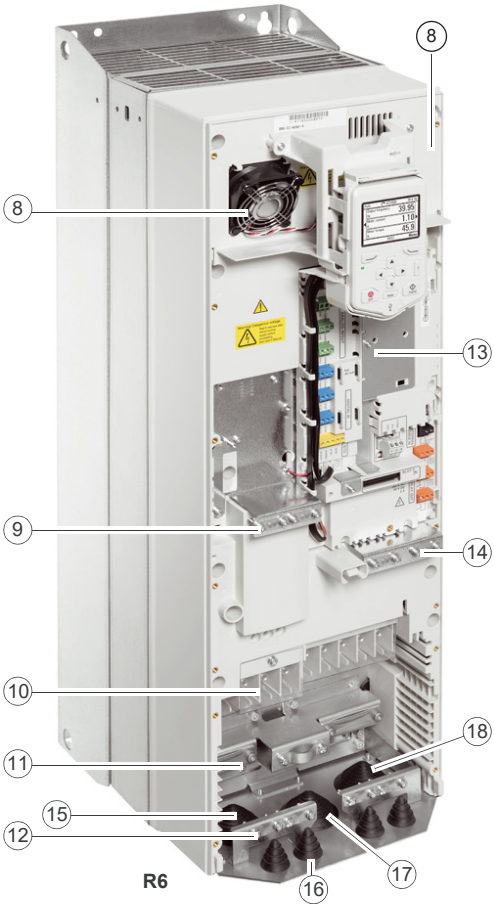

R6

8	Auxiliary cooling fan. For frame R3 in IP55 (UL Type 12) drives and for +C135 IP21 (UL Type 1) drives. Another auxiliary cooling fan at right-hand side of the control panel is included in IP55 (UL Type 12) frames R8 and frame R6 types -062A-4 and -052A-4 and bigger.	14	Clamps for securing the control cables mechanically
9	Clamps for securing the FSO wiring mechanically	15	Input power cable entry behind the 360-degree grounding clamps
10	Power cable connection terminals behind the shroud	16	Control cable entry (4 pcs)
11	360-degree grounding clamps for power cable shields	17	DC cable entry

12	360-degree grounding clamps for control cable shields	18	Motor cable entry behind the 360-degree grounding clamps
13	Control unit with I/O cable connection terminals		

Overview of power and control connections

The logical diagram below shows the power connections and control interfaces of the drive.

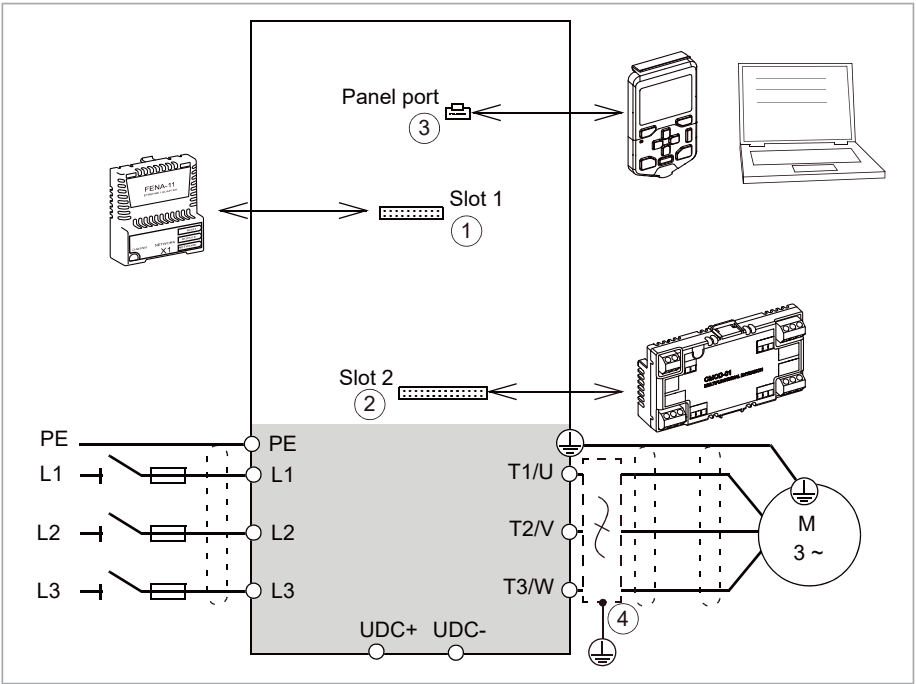

1	Option slot 1 for optional fieldbus adapter modules
2	Option slot 2 for optional I/O extension modules
3	Panel port
4	Common mode filter + additional d*u*/d*t* or sine filter. Refer to Common mode, du/dt and sine filters.

Control panel

To remove the control panel, press the retaining clip at the top (1a) and pull the panel forward from the top edge (1b).

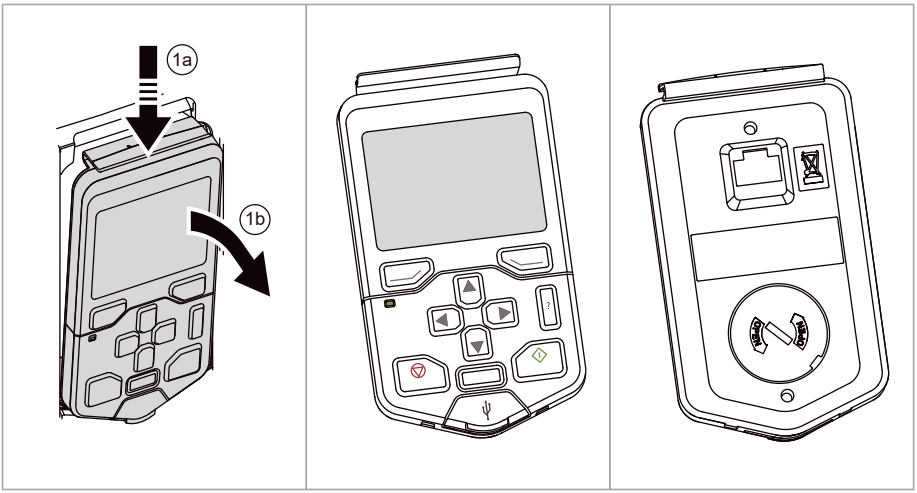

To install the control panel, put the bottom of the container in position (2a), press the retaining clip at the top (2b) and push the control panel in at the top edge (2c).

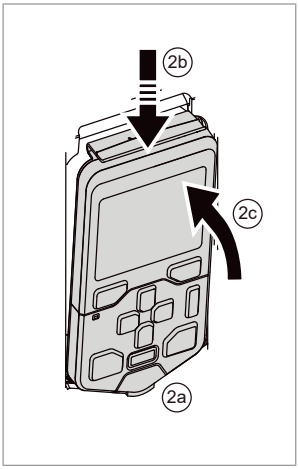

For the use of the control panel, see the firmware manual and ACS-AP-I, -S, -W and ACH-AP-H, -W Assistant control panels user's manual (3AUA0000085685 [English]).

Control panel door mounting kits

You can use a mounting platform to install the control panel on the cabinet door. Mounting platforms for control panels are available as options from ABB. For more information, see

Manual	Code (English)
DPMP-01 mounting platform for control panels installation guide	3AUA0000100140
DPMP-02/03 mounting platform for control panels installation guide	3AUA0000136205
DPMP-04 and DPMP-05 mounting platform for control panels installation guide	3AXD50000308484
DPMP-06 / 07 mounting platform for control panels installation guide	3AXD50000289561

Control panel mounting platform cover (option +J424)

CDOM-01 control panel mounting platform cover can be used to cover the control panel mounting platform when no control panel is on it. Power and fault indication LEDs are visible on the cover.

Remote control panel, panel bus

CDPI-01 communication adapter module can be used to connect the drive control panel remotely to the drive, or to chain the control panel or a PC to several drives on a panel bus. The panel bus can have maximum 16 ACH580-31 drives. For more information, see CDPI-01/-02 panel bus adapters user's manual (3AXD50000009929 [English]).

This photo shows the CDPI-01 communication adapter module.

Type designation label

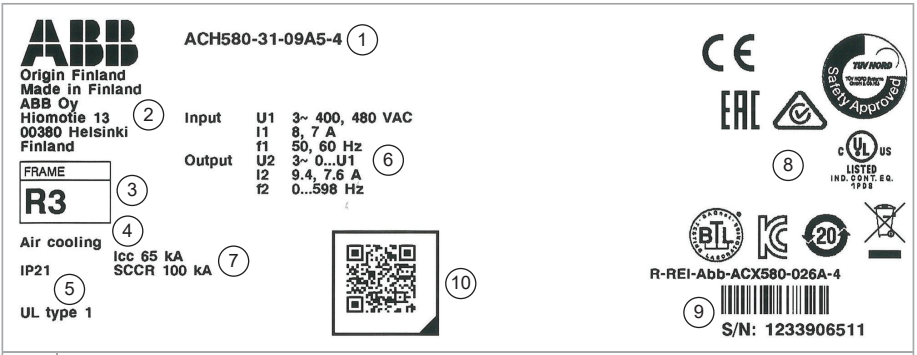

1	Type designation
2	Name and address of the manufacturer
3	Frame size (New design of frame R6 types are marked as HW v2)
4	Cooling method and additional information
5	Degree of protection
6	Nominal ratings in the supply voltage range, see the technical data.
7	Rated conditional short-circuit current, see the technical data.
8	Valid markings
9	S/N: Serial number of format MYYWWXXXX, where M: Manufacturer YY: 16, 17, 18, … for 2016, 2017, 2018, … WW: 01, 02, 03, … for week 1, week 2, week 3, … XXXXX: Integer starting every week from 0001
10	Link to product information

Type designation key

The type designation contains information on the specifications and configuration of the drive. The first digits from left express the basic drive type. The optional selections are given next, separated by plus signs. Codes that start with zero (eg. +0A123) indicate the absence of a specified feature. The main selections are described below. Not all selections are available for all types. For more information, refer to the ordering instructions available on request.

Basic code

Code	Description
ACH580	Product series
Type	
31	The standard delivery includes: Wall mounted, IP21 (UL Type 1), ACH-AP-H control panel with a USB port, integrated EMC filter (C2 in all frames), internal common mode filter (to be installed by the customer for frame R8), Safe torque off function, coated boards, cable entry from bottom, multilingual quick installation and start-up guide (EN + DE, ES, FR, IT, TR). Refer to Option codes (page 41) for options.
Size	
xxxx	See the technical data.
Voltage range	
2	208…240 V
4	380…480 V

Option codes

Code	Description
B056	IP55 (UL Type 12)
C135	Flange mounting
0J400	No control panel
J424	Blank control panel cover (no control panel)
J429	ACH-AP-H control panel with Bluetooth interface
K451	FDNA-01 DeviceNet™ adapter module

Code	Description
K452	FLON-01 LonWorks® adapter module
K454	FPBA-01 PROFIBUS DP adapter module
K457	FCAN-01 CANopen adapter module
K458	FSCA-01 RS-485 (Modbus/RTU) adapter module
K462	FCNA-01 ControlNet™ adapter module
K465	FBIP-01 BACnet/IP adapter module, 2-port
K469	FECA-01 EtherCat adapter module
K470	FEPL-02 EtherPOWERLINK adapter module
K475	FENA-21 Ethernet adapter module for EtherNet/IP™, Modbus TCP and PROFINET IO protocols, 2-port
L501	CMOD-01 External 24 V AC/DC and digital I/O extension (2×RO and 1×DO)
L512	CHDI-01 115/230 V digital input module (six digital inputs and two relay outputs)
L523	CMOD-02 External 24 V and isolated PTC interface
L525	CAIO-01 analog I/O extension module
L537	CPTC-02 ATEX-certified thermistor protection module
N2000	Standard software language set (default; includes EN, DE, ES, PT, FR, ZH, IT, FI, PL, RU, TR)
N2901	European software language set (default for SV, CZ, HU, DA, NL; includes EN, DE, ES, PT, FR, SV, CZ, HU, DA, NL)
N2902	Asian software language set (default for KO, TH; includes EN, DE, ES, PT, FR, ZH, KO, TH)
N8056	Active braking
P931	Extended warranty 36 months from delivery
P932	Extended warranty 60 months from delivery
P940	Version for cabinet mounting (Drive module without front covers and bottom plate)
Q971	ATEX-certified safe disconnection function

Code	Description
R700	Printed manuals in English
R701	Printed manuals in German [1)]
R702	Printed manuals in Italian[1)]
R707	Printed manuals in French[1)]
R708	Printed manuals in Spanish[1)]
R709	Printed manuals in Portuguese[1)]
R711	Printed manuals in Russian[1)]
R712	Printed manuals in Chinese[1)]
R714	Printed manuals in Turkish[1)]

1) Manuals in English may be included if a translation in the specified language is not available.

4

Mechanical installation

Contents of this chapter

This chapter tells how to examine the installation site, unpack and examine the delivery and install the drive mechanically.

Cabinet installation (option +P940)

See also ACS580…, ACH580… and ACQ580…+P940 and +P944 drive modules supplement (3AXD50000210305 [English]).

For generic guidelines for planning the installation of the drive modules into a user-defined cabinet, see Drive modules cabinet design and construction instructions (3AUA0000107668 [English]).

Flange mounting (option +C135)

See also:

Manual name	Code (English)
ACS880-11…, ACS880-31…, ACH580-31… and ACQ580-31…+C135 drives with flange mounting kit supplement	3AXD50000349838
ACS880-11…, ACS880-31…, ACH580-31… and ACQ580-31…+C135 frame R3 flange mounting kit quick installation guide	3AXD50000181506
ACS880-11…+C135, ACS880-31…+C135, ACH580-31…+C135 and ACQ580-31…+C135 frames R6 and R8 flange mounting kit quick installation guide	3AXD50000133611

Safety

WARNING!
Frames R6 and R8: Lift the drive with a lifting device. Use the lifting eyes of the drive. Do not tilt the drive. **The drive is heavy and its center of gravity is high. An overturning drive can cause physical injury**.

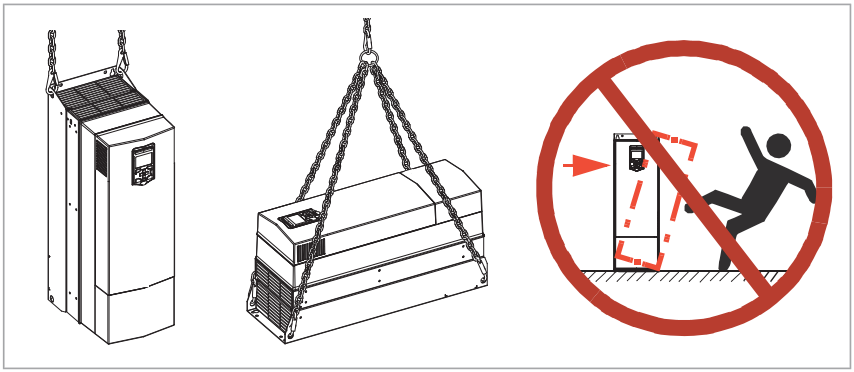

Examining the installation site

Examine the installation site. Make sure that:

- The installation site is sufficiently ventilated or cooled to remove heat from the drive. See the technical data.
- The ambient conditions of the drive meet the specifications. See the technical data.
- The material behind, above and below the drive is non-flammable.
- The installation surface is as close to vertical as possible and strong enough to support the drive.
- There is sufficient free space around the drive for cooling, maintenance, and operation. See the free space specifications for the drive.
- Make sure that there are no sources of strong magnetic fields such as high-current single-core conductors or contactor coils near the drive. A strong magnetic field can cause interference or inaccuracy in the operation of the drive.

Installation positions

There are three alternative ways to install the drive:

- vertically alone. Do not install the drive upside down.
- vertically side by side
- horizontally alone, IP21 (UL Type 1) only.

  Note: The vibration specification in the technical data may not be fulfilled.

  Note: IP21 (UL Type 1) construction only meets IP20 (UL Type Open) in horizontal position.

Free space requirements

Free space requirements are shown in the drawings below.

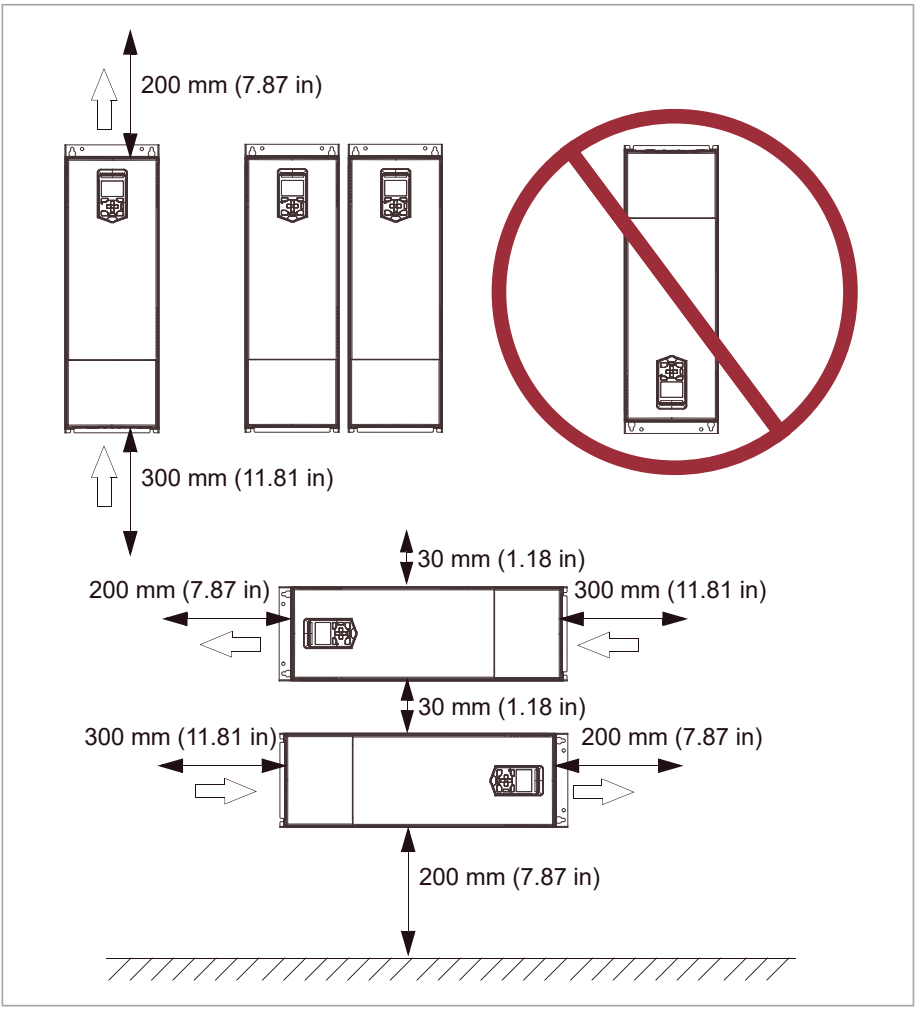

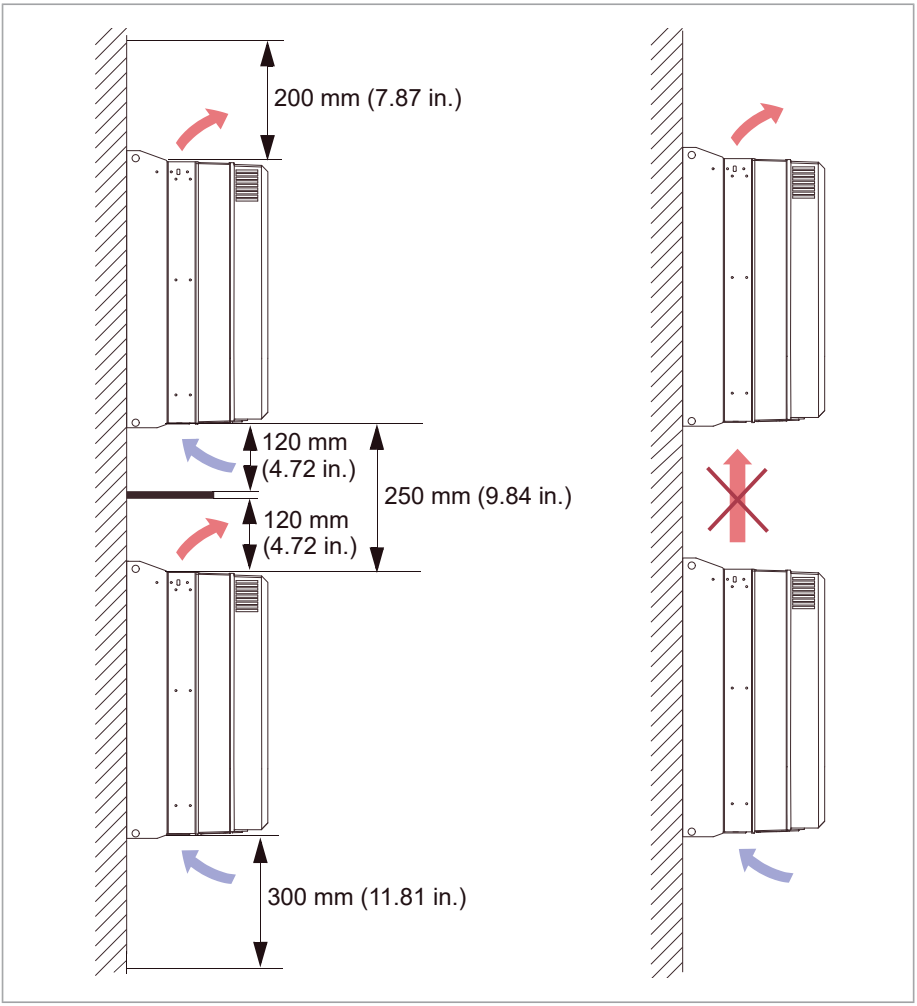

Necessary tools

To move a heavy drive, you need a crane, fork-lift or pallet truck (check load capacity!).

To lift a heavy drive, you need a hoist.

To install the drive mechanically, you need the following tools:

- drill with suitable bits
- screwdriver set (Torx, flat and/or Phillips, as appropriate)

- torque wrench
- socket set, Hex key set (metric)
- tape measure, if you will not be using the provided mounting template.

Moving the drive

Move the drive in its transport package to the installation site.

Unpacking and examining delivery

The figure below shows the drive package with its contents. Examine that all items are present and there are no signs of damage. Read the data on the type designation label of the drive to make sure that the drive is of the correct type.

R3 IP21 (UL Type 1) and IP55 (UL Type 12)

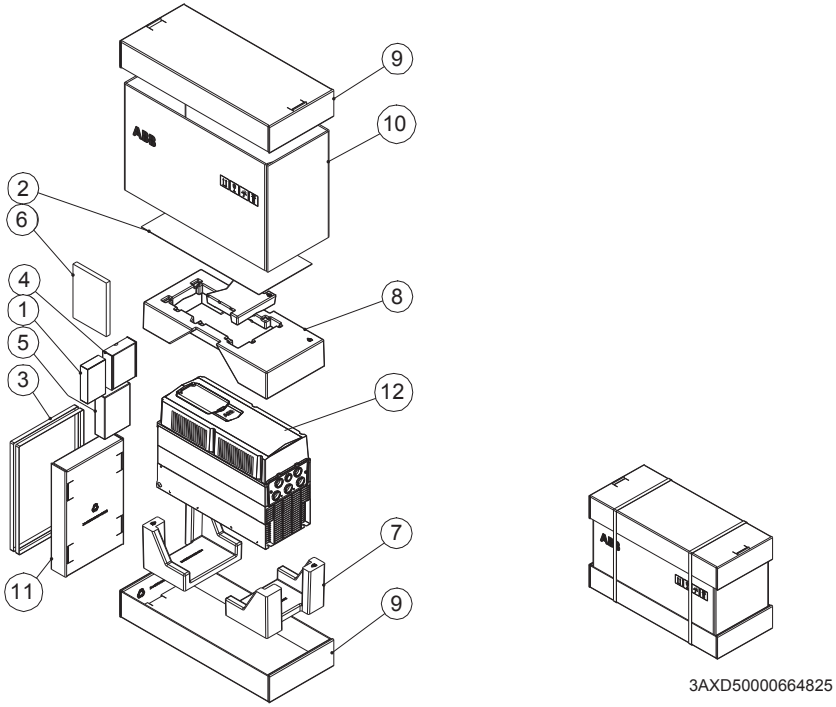

1	Control panel	7	Package cushion
2	Mounting template	8	Foam cushion
3	Package straps	9	Cardboard tray
4	I/O option module	10	Cardboard sleeve
5	Fieldbus option module	11	Cardboard box which contains control panel box 1 and option boxes 4 and 5
6	Printed quick installation and start-up guide and manuals, multilingual residual voltage warning sticker	12	Drive

To unpack:

- Cut the straps (3).
- Remove the tray (9) and sleeve (10).
- Remove the cover-protecting film.
- Lift the drive.

R6 IP21 (UL Type 1)

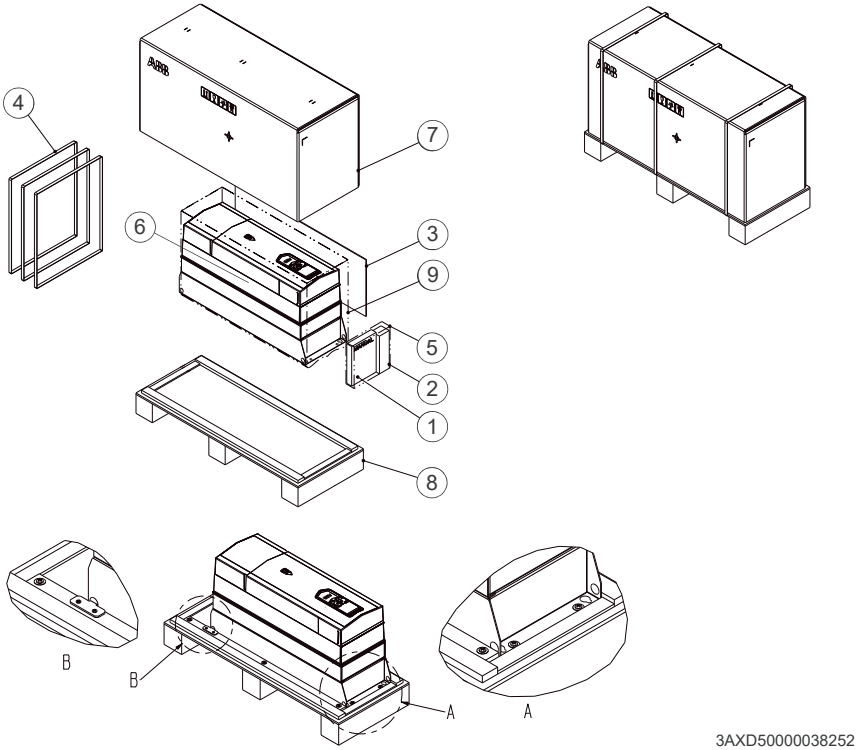

1	Printed quick installation and stat-up guide and manuals, multilingual residual voltage warning sticker	6	Drive with factory installed options
2	Accessories	7	Outer box
3	Mounting template	8	Pallet
4	Package straps	9	VCI bag
5	Plastic bag		

To unpack:

- Cut the straps (4).
- Remove the outer box (7).
- Open the VCI bag (9).
- Undo the attaching screws (A, B).
- Lift the drive.

R6 IP55 (UL Type 12)

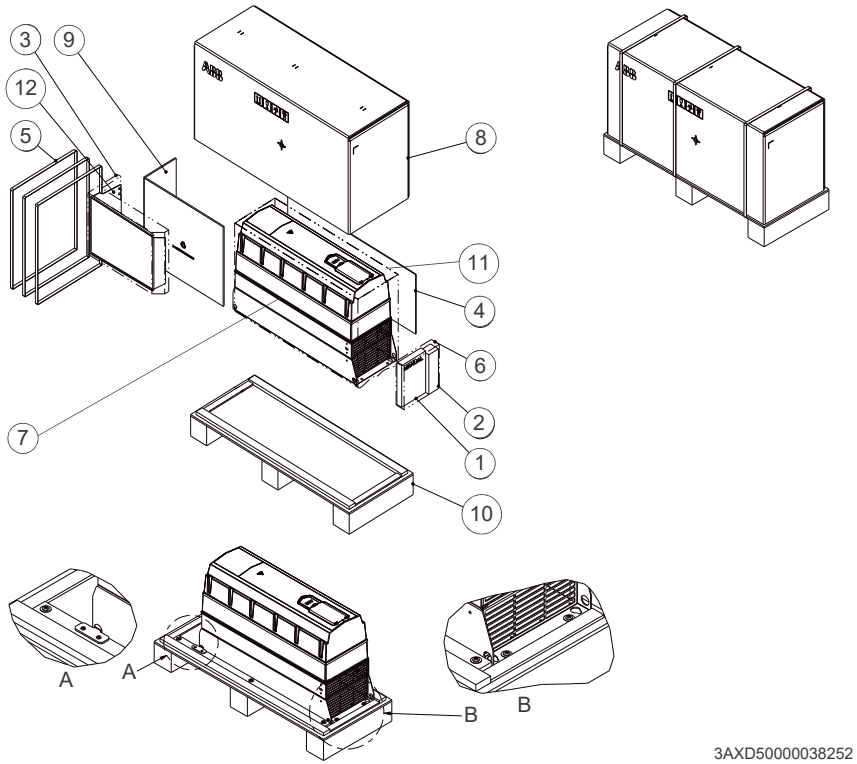

1	Printed quick installation and start-up guide and manuals, multilingual residual voltage warning sticker	7	Drive with factory installed options
2	Accessories	8	Outer box
3	Bubble wrap	9	Cardboard insert
4	Mounting template	10	Pallet
5	Package straps	11	VCI bag
6	Plastic bag	12	UL Type 12 hood

R6 IP55 (UL Type 12)
To unpack: • Cut the straps (5). • Remove the outer box (8). • Open the VCI bag (11). • Undo the attaching screws (A, B). • Lift the drive.

R8 IP21 (UL Type 1)

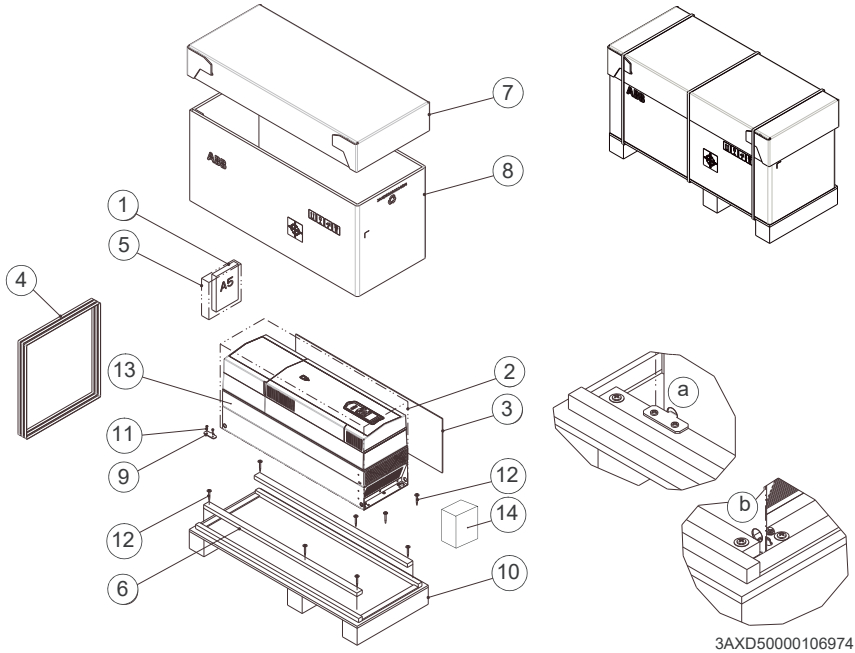

1	Printed quick installation and start-up guide and manuals, multilingual residual voltage warning sticker	8	Cardboard sleeve
2	VCI bag	9	Packing bracket
3	Mounting template	10	Pallet
4	Package straps	11	Screw
5	Plastic bag	12	Screw
6	Plywood support	13	Drive with factory installed options
7	Tray	14	Common mode filter (option +E208)

To unpack:

- Cut the straps (4).
- Remove the tray (7) and cardboard sleeve (8).
- Open the VCI bag (2).
- Undo the attaching screws (a, b).
- Lift the drive.

R8 IP55 (UL Type 12)

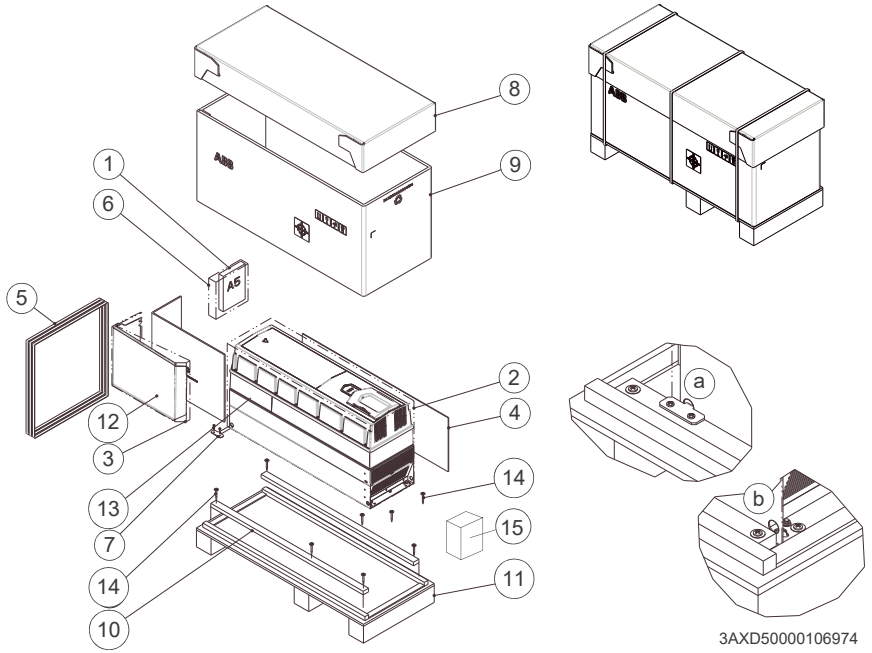

1	Printed quick installation and start-up guide and manuals, multilingual residual voltage warning sticker	9	Cardboard sleeve
2	VCI bag	10	Plywood support
3	Bubble wrap	11	Pallet
4	Mounting template	12	UL Type 12 hood
5	Package straps	13	Drive with factory installed options
6	Plastic bag	14	Screws
7	Packing bracket	15	Common mode filter (option +E208)
8	Tray	-	

R8 IP55 (UL Type 12)
To unpack: • Cut the straps (5). • Remove the tray (8) and cardboard sleeve (9). • Open the VCI bag (2). • Undo the attaching screws (a, b). • Lift the drive.

Installing the drive vertically

See section Free space requirements (page 48) for the required free space above and below the drive.

1. To mark the hole locations, use the mounting template included in the package. Do not leave the mounting template under the drive. The drive dimensions and hole locations are also shown in the dimension drawings.

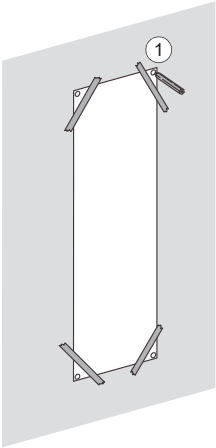

2. Drill the mounting holes.
3. Insert anchors or plugs into the holes and start the screws or bolts into the anchors or plugs. Drive the screws or bolts long enough into the wall to make them carry the weight of the drive.
4. Put the drive onto the bolts on the wall.
5. For R6 and R8 with option +B056 (UL Type 12): Install the hood on top of the drive before you tighten the upper attaching bolts. Put the vertical edge of the hood in between the wall and the drive back plate.

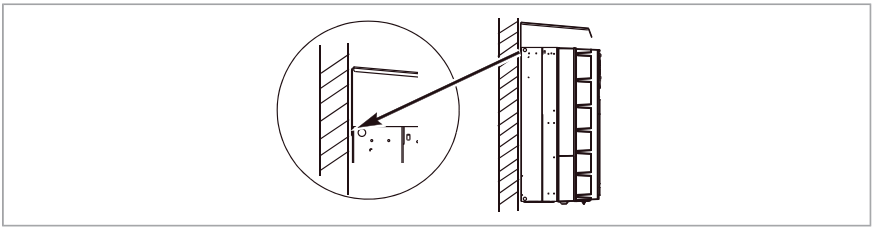

6. Tighten the bolts in the wall securely.

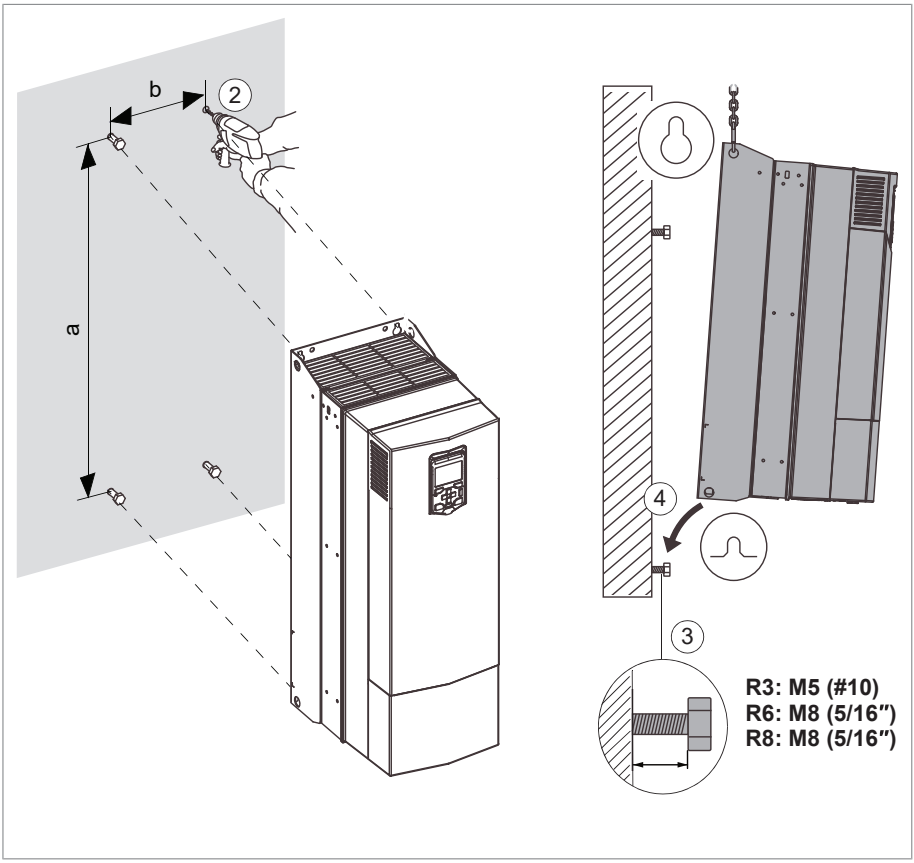

	R3		R6		R8	
	mm	in	mm	in	mm	in
a	474	18.66	753	29.64	945	37.20
b	160	6.30	212.5	8.37	262.5	10.33

	R3		R6		R8	
	kg	lb	kg	lb	kg	lb
IP21, UL Type 1	21.3	47	61.0	135	118	260
IP55, UL Type 12	23.3	52	63	139	124	273

Installing the drive vertically side by side

Drives can be installed side by side. Follow the steps in section Installing the drive vertically (page 57).

Installing the drive horizontally

The drive can be installed with either the left or right side up. Follow the steps in section Installing the drive vertically (page 57). For free space requirements, see section Free space requirements (page 48).

5

Guidelines for planning the electrical installation

Contents of this chapter

This chapter contains guidelines for planning the electrical installation of the drive.

Limitation of liability

The installation must always be designed and made according to applicable local laws and regulations. ABB does not assume any liability whatsoever for any installation which breaches the local laws and/or other regulations. Furthermore, if the recommendations given by ABB are not followed, the drive may experience problems that the warranty does not cover.

North America

Installations must be compliant with NFPA 70 (NEC)[1)] and/or Canadian Electrical Code (CE) along with state and local codes for your location and application.

[1)] National Fire Protection Association 70 (National Electric Code).

Selecting the main supply disconnecting device

You must equip the drive with a main supply disconnecting device which meets the local safety regulations. You must be able to lock the disconnecting device to the open position for installation and maintenance work.

To comply with European Union directives and United Kingdom regulations related to standard EN 60204-1, the disconnecting device must be one of these types:

- switch-disconnector of utilization category AC-23B (IEC 60947-3)
- disconnector that has an auxiliary contact that in all cases causes switching devices to break the load circuit before the opening of the main contacts of the disconnector (EN 60947-3)
- circuit-breaker suitable for isolation in accordance with IEC 60947-2.

Implementing a fast switch over between the power line and generator

You can do a fast switch over between the power line and generator without stopping the drive. Starting and stopping the drive takes more time than the fast switch over.

WARNING! The drive requires at least a 50 ms fast switch over time and the same phase order in the switching. A shorter switch over time or a different phase order can cause a drive fault trip or damage to the drive.

Consult ABB for implementation instructions of the fast switch over system.

Selecting the main contactor

You can equip the drive with a main contactor.

Follow these guidelines when you select a customer-defined main contactor:

- Dimension the contactor according to the nominal voltage and current of the drive. Also consider the environmental conditions such as surrounding air temperature.
- IEC installations: Select contactor with utilization category AC-1 (number of operations under load) according to IEC 60947-4.
- Consider the application life time requirements.

Examining the compatibility of the motor and drive

Use asynchronous AC induction motors, permanent magnet synchronous motors or ABB synchronous reluctance motors (SynRM motors) with the drive.

Select the motor size and drive type from the rating table on basis of the AC line voltage and motor load. You can find the rating table in the appropriate hardware manual. You can also use the DriveSize PC tool.

Make sure that the motor can be used with an AC drive. See Requirements tables (page 63). For basics of protecting the motor insulation and bearings in drive systems, see Protecting the motor insulation and bearings (page 63).

Note:

- Consult the motor manufacturer before using a motor with nominal voltage that differs from the AC line voltage connected to the drive input.
- The voltage peaks at the motor terminals are relative to the supply voltage of the drive, not to the drive output voltage.

Protecting the motor insulation and bearings

The drive employs modern IGBT inverter technology. Regardless of frequency, the drive output comprises pulses of approximately the drive DC bus voltage with a very short rise time. The pulse voltage can almost double at the motor terminals, depending on the attenuation and reflection properties of the motor cable and the terminals. This can cause additional stress on the motor and motor cable insulation.

Modern variable speed drives with their fast rising voltage pulses and high switching frequencies can generate current pulses that flow through the motor bearings. This can gradually erode the bearing races and rolling elements.

du/dt filters protect motor insulation system and reduce bearing currents. Common mode filters mainly reduce bearing currents. Insulated N-end (non-drive end) bearings protect the motor bearings.

Requirements tables

These tables show how to select the motor insulation system and when a drive du/dt and common mode filters and insulated N-end (non-drive end) motor bearings are required. Ignoring the requirements or improper installation may shorten motor life or damage the motor bearings and voids the warranty.

Requirements for ABB motors, P_n < 100 kW (134 hp)

See also Abbreviations (page 68).

Motor type	Nominal AC line voltage	Requirement for	
		Motor insulation system	ABB d*u*/d*t* and common mode filters, insulated N-end motor bearings
			P_n < 100 kW and frame size < IEC 315
			P_n < 134 hp and frame size < NEMA 500
Random-wound M2_, M3_ and M4_	U_n ≤ 500 V	Standard	-
	500 V < U_n ≤ 600 V	Standard	+ d*u*/d*t*
		Reinforced	-
	600 V < U_n ≤ 690 V (cable length ≤ 150 m)	Reinforced	+ d*u*/d*t*
	600 V < U_n ≤ 690 V (cable length > 150 m)	Reinforced	-
Form-wound HX_ and AM_	380 V < U_n ≤ 690 V	Standard	N/A
Old [1] form-wound HX_ and modular	380 V < U_n ≤ 690 V	Check with the motor manufacturer.	+ N + d*u*/d*t* with voltages over 500 V + CMF
Random-wound HX_ and AM_ [2]	0 V < U_n ≤ 500 V	Enamelled wire with fiber glass taping	+ N + CMF
	500 V < U_n ≤ 690 V		+ N + d*u*/d*t* + CMF
HDP	Consult the motor manufacturer.		

[1] manufactured before 1.1.1998

[2] For motors manufactured before 1.1.1998, check for additional instructions with the motor manufacturer.

Requirements for ABB motors, $P_n \geq 100$ kW (134 hp)

See also Abbreviations (page 68).

Motor type	Nominal AC line voltage	Requirement for		
		Motor insulation system	ABB d*u*/d*t* and common mode filters, insulated N-end motor bearings	
			100 kW ≤ P_n < 350 kW or IEC 315 ≤ frame size < IEC 400	P_n ≥ 350 kW or frame size ≥ IEC 400
			134 hp ≤ P_n < 469 hp or NEMA 500 ≤ frame size ≤ NEMA 580	P_n ≥ 469 hp or frame size > NEMA 580
Random-wound M2_, M3_ and M4_	U_n ≤ 500 V	Standard	+ N	+ N + CMF
	500 V < U_n ≤ 600 V	Standard	+ N + d*u*/d*t*	+ N + d*u*/d*t* + CMF
		Reinforced	+ N	+ N + CMF
	600 V < U_n ≤ 690 V (cable length ≤ 150 m)	Reinforced	+ N + d*u*/d*t*	+ N + d*u*/d*t* + CMF
	600 V < U_n ≤ 690 V (cable length > 150 m)	Reinforced	+ N	+ N + CMF
Form-wound HX_ and AM_	380 V < U_n ≤ 690 V	Standard	+ N + CMF	P_n < 500 kW: +N + CMF
				P_n ≥ 500 kW: +N + d*u*/d*t* + CMF
Old[1] form-wound HX_ and modular	380 V < U_n ≤ 690 V	Check with the motor manufacturer.	+ N + d*u*/d*t* with voltages over 500 V + CMF	
Random-wound HX_ and AM_ [2]	0 V < U_n ≤ 500 V	Enamelled wire with fiber glass taping	+ N + CMF	
	500 V < U_n ≤ 690 V		+ N + d*u*/d*t* + CMF	
HDP	Consult the motor manufacturer.			

1) manufactured before 1.1.1998

2) For motors manufactured before 1.1.1998, check for additional instructions with the motor manufacturer.

Requirements for non-ABB motors, P_n < 100 kW (134 hp)

See also Abbreviations (page 68).

Motor type	Nominal AC line voltage	Requirement for	
		Motor insulation system	ABB d*u*/d*t* and common mode filters, insulated N-end motor bearings
			P_n < 100 kW and frame size < IEC 315
			P_n < 134 hp and frame size < NEMA 500
Random-wound and form-wound	U_n ≤ 420 V	Standard: $\hat{U}_{LL}$ = 1300 V	-
	420 V < U_n ≤ 500 V	Standard: $\hat{U}_{LL}$ = 1300 V	+ d*u*/d*t*
		Reinforced: $\hat{U}_{LL}$ = 1600 V, 0.2 µs rise time	-
	500 V < U_n ≤ 600 V	Reinforced: $\hat{U}_{LL}$ = 1600 V	+ d*u*/d*t*
		Reinforced: $\hat{U}_{LL}$ = 1800 V	-
	600 V < U_n ≤ 690 V	Reinforced: $\hat{U}_{LL}$ = 1800 V	+ d*u*/d*t*
		Reinforced: $\hat{U}_{LL}$ = 2000 V, 0.3 µs rise time [1)]	-

1) If the intermediate DC circuit voltage of the drive is increased from the nominal level due to long term resistor braking cycles, check with the motor manufacturer if additional output filters are needed.

Requirements for non-ABB motors, $P_n \geq 100$ kW (134 hp)

See also Abbreviations (page 68).

Motor type	Nominal AC line voltage	Requirement for		
		Motor insulation system	ABB d*u*/d*t* and common mode filters, insulated N-end motor bearings	
			100 kW ≤ P_n < 350 kW or IEC 315 ≤ frame size < IEC 400	P_n ≥ 350 kW or frame size ≥ IEC 400
			134 hp ≤ P_n < 469 hp or NEMA 500 ≤ frame size ≤ NEMA 580	P_n ≥ 469 hp or frame size > NEMA 580
Random-wound and form-wound	U_n ≤ 420 V	Standard: $\hat{U}_{LL}$ = 1300 V	+ N or CMF	+ N + CMF
	420 V < U_n ≤ 500 V	Standard: $\hat{U}_{LL}$ = 1300 V	+ d*u*/d*t* + (N or CMF)	+ N + d*u*/d*t* + CMF
		Reinforced: $\hat{U}_{LL}$ = 1600 V, 0.2 µs rise time	+ N or CMF	+ N + CMF
	500 V < U_n ≤ 600 V	Reinforced: $\hat{U}_{LL}$ = 1600 V	+ d*u*/d*t* + (N or CMF)	+ N + d*u*/d*t* + CMF
		Reinforced: $\hat{U}_{LL}$ = 1800 V	+ N or CMF	+ N + CMF
	600 V < U_n ≤ 690 V	Reinforced: $\hat{U}_{LL}$ = 1800 V	+ d*u*/d*t* + N	+ N + d*u*/d*t* + CMF
		Reinforced: $\hat{U}_{LL}$ = 2000 V, 0.3 µs rise time [1]	+ N + CMF	+ N + CMF

[1] If the intermediate DC circuit voltage of the drive is increased from the nominal level due to long term resistor braking cycles, check with the motor manufacturer if additional output filters are needed.

Abbreviations

Abbr.	Definition
U_n	Nominal AC line voltage
$\hat{U}_{LL}$	Peak line-to-line voltage at motor terminals which the motor insulation must withstand
P_n	Motor nominal power
d*u*/d*t*	d*u*/d*t* filter at the output of the drive
CMF	Common mode filter of the drive
N	N-end bearing: insulated motor non-drive end bearing
n.a.	Motors of this power range are not available as standard units. Consult the motor manufacturer.

Availability of d*u*/d*t* filter and common mode filter by drive type

See chapter Common mode, d*u*/d*t* and sine filters (page 267).

Additional requirements for explosion-safe (EX) motors

If you use an explosion-safe (EX) motor, obey the rules in the requirements table above. In addition, consult the motor manufacturer for any further requirements.

Additional requirements for ABB motors of types other than M2_, M3_, M4_, HX_ and AM_

Use the selection criteria given for non-ABB motors.

Additional requirements for braking applications

When the motor brakes the machinery, the intermediate circuit DC voltage of the drive increases, the effect being similar to the motor supply voltage increasing by up to 20 percent. Consider this voltage increase when specifying the motor insulation requirements if the motor will be braking a large part of its operation time.

Example: Motor insulation requirement for a 400 V AC line voltage application must be selected as if the drive were supplied with 480 V.

Additional requirements for the regenerative and low harmonics drives

It is possible to increase the intermediate circuit DC voltage from the nominal (standard) level with a parameter in the control program. If you choose to do this, select the motor insulation system which withstands the increased DC voltage level.

Additional requirements for ABB high-output and IP23 motors

The rated output power of high output motors is higher than what is stated for the particular frame size in EN 50347 (2001).

This table shows the requirements for protecting the motor insulation and bearings in drive systems for ABB random-wound motor series (for example, M3AA, M3AP and M3BP).

Nominal AC supply voltage	**Requirement for**			
	Motor insulation system	**ABB d*u*/d*t* and common mode filters, insulated N-end motor bearings**		
		P_n < 100 kW	**100 kW ≤ P_n < 200 kW**	**P_n ≥ 200 kW**
		P_n < 140 hp	**140 hp ≤ P_n < 268 hp**	**P_n ≥ 268 hp**
U_n ≤ 500 V	Standard	-	+ N	+ N + CMF
500 V < U_n ≤ 600 V	Standard	+ d*u*/d*t*	+ d*u*/d*t* + N	+ d*u*/d*t* + N + CMF
	Reinforced	-	+ N	+ N + CMF
600 V < U_n ≤ 690 V	Reinforced	+ d*u*/d*t*	+ d*u*/d*t* + N	+ d*u*/d*t* + N + CMF

Additional requirements for non-ABB high-output and IP23 motors

The rated output power of high-output motors is higher than what is stated for the particular frame size in EN 50347 (2001).

If you plan to use a non-ABB high-output motor or an IP23 motor, consider these additional requirements for protecting the motor insulation and bearings in drive systems:

- If motor power is below 350 kW: Equip the drive and/or motor with the filters and/or bearings according to the table below.
- If motor power is above 350 kW: Consult the motor manufacturer.

Nominal AC supply voltage	Requirement for		
	Motor insulation system	**ABB d*u*/d*t* and common mode filters, insulated N-end motor bearings**	
		P_n < 100 kW or frame size < IEC 315	**100 kW < P_n < 350 kW or IEC 315 < frame size < IEC 400**
		P_n < 134 hp or frame size < NEMA 500	**134 hp < P_n < 469 hp or NEMA 500 < frame size < NEMA 580**
U_n ≤ 420 V	Standard: $\hat{U}_{LL}$ = 1300 V	+ N or CMF	+ N or CMF
420 V < U_n < 500 V	Standard: $\hat{U}_{LL}$ = 1300 V	+ d*u*/d*t* + (N or CMF)	+ N + d*u*/d*t* + CMF
	Reinforced: $\hat{U}_{LL}$ = 1600 V, 0.2 microsecond rise time	+ N or CMF	+ N or CMF
500 V < U_n ≤ 600 V	Reinforced: $\hat{U}_{LL}$ = 1600 V	+ d*u*/d*t* + (N or CMF)	+ N + d*u*/d*t* + CMF
	Reinforced: $\hat{U}_{LL}$ = 1800 V	+ N or CMF	+ N + CMF
600 V < U_n ≤ 690 V	Reinforced: $\hat{U}_{LL}$ = 1800 V	+ N + d*u*/d*t*	+ N + d*u*/d*t* + CMF
	Reinforced: $\hat{U}_{LL}$ = 2000 V, 0.3 microsecond rise time [1)]	+ N + CMF	+ N + CMF

1) If the intermediate DC circuit voltage of the drive is increased from the nominal level due to long term resistor braking cycles, check with the motor manufacturer if additional output filters are needed.

Additional data for calculating the rise time and the peak line-to-line voltage

The diagrams below show the relative peak line-to-line voltage and rate of change of voltage as a function of the motor cable length. If you need to calculate the actual peak voltage and voltage rise time considering the actual cable length, proceed as follows:

- Peak line-to line voltage: Read the relative $\hat{U}_{LL}/U_n$ value from the diagram below and multiply it by the nominal supply voltage (U_n).
- Voltage rise time: Read the relative values $\hat{U}_{LL}/U_n$ and (d*u*/d*t*)/U_n from the diagram below. Multiply the values by the nominal supply voltage (U_n) and substitute into equation $t = 0.8 \cdot \hat{U}_{LL}/(du/dt)$.

A	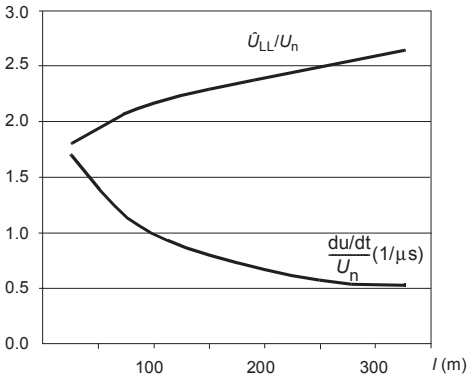
B	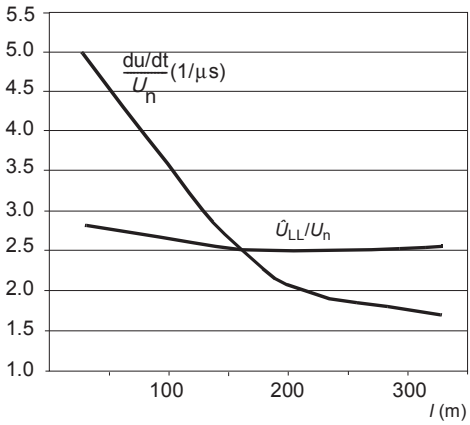
A	Drive with du/dt filter
B	Drive without du/dt filter
l	Motor cable length
U_n	Nominal AC line voltage
$\hat{U}_{LL}/U_n$	Relative peak line-to-line voltage
$(du/dt)/U_n$	Relative du/dt value
Note: $\hat{U}_{LL}$ and du/dt values are approximately 20% higher during the resistor braking.	

Additional note for sine filters

A sine filter also protects the motor insulation system. The peak phase-to-phase voltage with a sine filter is approximately 1.5 · U_n.

Selecting the power cables

General guidelines

Select the input power and motor cables according to local regulations.

- **Current:** Select a cable capable of carrying the maximum load current and suitable for the prospective short-circuit current provided by the supply network. The method of installation and ambient temperature affect the cable current carrying capacity. Obey local regulations and laws.
- **Temperature:** For an IEC installation, select a cable rated for at least 70 °C (158 °F) maximum permissible temperature of conductor in continuous use.
  For North America, select a cable rated for at least 75 °C (167 °F).
  Important: For certain product types or option configurations higher temperature rating may be required. See the technical data for details.
- **Voltage:** 600 V AC cable is accepted for up to 500 V AC. 750 V AC cable is accepted for up to 600 V AC. 1000 V AC cable is accepted for up to 690 V AC.

To comply with the EMC requirements of the CE mark, use one of the preferred cable types. See Preferred power cable types (page 73).

Symmetrical shielded cable reduces electromagnetic emission of the whole drive system as well as the stress on motor insulation, bearing currents and wear.

Metal conduit reduces electromagnetic emission of the whole drive system.

Typical power cable sizes

See the technical data.

Power cable types

Preferred power cable types

This section shows the preferred cable types. Make sure that the selected cable type also complies with local/state/country electrical codes.

Cable type	Use as input power cabling	Use as motor cabling and as brake resistor cabling
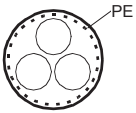 Symmetrical shielded (or armored) cable with three phase conductors and concentric PE conductor as shield (or armor)	Yes	Yes
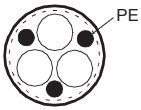 Symmetrical shielded (or armored) cable with three phase conductors and symmetrically constructed PE conductor and a shield (or armor)	Yes	Yes
Symmetrical shielded (or armored) cable with three phase conductors and a shield (or armor), and separate PE conductor/cable [1]	Yes	Yes

[1] A separate PE conductor is required if the conductivity of the shield (or armor) is not sufficient for the PE use.

Alternate power cable types

Cable type	Use as input power cabling	Use as motor cabling and as brake resistor cabling
Four-conductor cable in plastic jacket (three phase conductors and PE)	Yes with phase conductor smaller than 10 mm^2 (8 AWG) Cu.	Yes with phase conductor smaller than 10 mm^2 (8 AWG) Cu, or motors up to 30 kW (40 hp). **Note:** Shielded or armored cable, or cabling in metal conduit is always recommended to minimize radio frequency interference.
Four-conductor armored cable (three phase conductors and PE)	Yes	Yes with phase conductor smaller than 10 mm^2 (8 AWG) Cu, or motors up to 30 kW (40 hp)
Shielded (Al/Cu shield or armor)[1] four-conductor cable (three phase conductors and a PE)	Yes	Yes with motors up to 100 kW (135 hp). A potential equalization between the frames of motor and driven equipment is required.

[1] Armor may act as an EMC shield, as long as it provides the same performance as a concentric EMC shield of a shielded cable. To be effective at high frequencies, the shield conductivity must be at least 1/10 of the phase conductor conductivity. The effectiveness of the shield can be evaluated based on the shield inductance, which must be low and only slightly dependent on frequency. The requirements are easily met with a copper or aluminum shield/armor. The cross-section of a steel shield must be ample and the shield helix must have a low gradient. A galvanized steel shield has a better high-frequency conductivity than a non-galvanized steel shield.

Not allowed power cable types

Cable type	Use as input power cabling	Use as motor cabling and as brake resistor cabling
Symmetrical shielded cable with individual shields for each phase conductor	No	No

Additional guidelines – North America

ABB recommends the use of metallic conduit for power wiring. ABB also recommends the use of symmetrical shielded VFD cable between drive and motor(s).

This table shows examples of methods for wiring the drive. Refer to NFPA 70 (NEC) along with state and local codes for the appropriate methods for your application.

Wiring method	Notes
Conduit - Metallic [1) 2)]	
Electrical metallic tubing: Type EMT	Prefer symmetrical shielded VFD cable. Use separate conduit run for each motor. Do not run input power wiring and motor wiring in the same conduit.
Rigid metal conduit: Type RMC	
Liquid-tight flexible metal electrical conduit: Type LFMC	
Conduit - Non-metallic [2) 3)]	
Liquid-tight flexible non-metallic conduit: Type LFNC	Prefer symmetrical shielded VFD cable. Use separate conduit run for each motor. Do not run input power wiring and motor wiring in the same conduit.
Wireways [2)]	
Metallic	Prefer symmetrical shielded VFD cable. Separate motor wiring from input power wiring and other low voltage wiring. Do not run outputs of multiple drives parallel. Bundle each cable (wiring) together and use separators where possible.

Wiring method	Notes
Free air [2]	
Enclosures, air handlers, etc.	Prefer symmetrical shielded VFD cable. Allowed internally in enclosures when in accordance with UL.

[1] Metallic conduit may be used as an additional ground path, provided this path is a solid path capable of handling ground currents.

[2] See NFPA NFPA 70 (NEC), UL, and local codes for your application.

[3] Non-metallic conduit use underground is allowed; however, these installations inherently have an increased chance for nuisance problems due to the potential for water/moisture in the conduit. Water/moisture in the conduit increases the likelihood of VFD faults or warnings. Proper installation is required to make sure there is no intrusion of water/moisture.

Metal conduit

Couple separate parts of a metal conduit together: bridge the joints with a ground conductor bonded to the conduit on each side of the joint. Also bond the conduits to the drive enclosure and motor frame. Use separate conduits for input power, motor, brake resistor, and control wiring. Do not run motor wiring from more than one drive in the same conduit.

Power cable shield

If the cable shield is used as the sole protective earth (PE) conductor, make sure that its conductivity agrees with the PE conductor requirements.

To effectively suppress radiated and conducted radio-frequency emissions, the cable shield conductivity must be at least 1/10 of the phase conductor conductivity. The requirements are easily met with a copper or aluminum shield. The minimum requirement of the motor cable shield of the drive is shown below. It consists of a concentric layer of copper wires with an open helix of copper tape or copper wire. The better and tighter the shield, the lower the emission level and bearing currents.

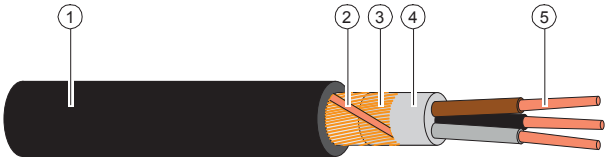

1	Insulation jacket
2	Helix of copper tape or copper wire
3	Copper wire shield
4	Inner insulation
5	Cable core

Grounding requirements

This section gives general requirements for grounding the drive. When you plan the grounding of the drive, obey all the applicable national and local regulations.

The conductivity of the protective earth conductor(s) must be sufficient.

Unless local wiring regulations state otherwise, the cross-sectional area of the protective earth conductor must agree with the conditions that require automatic disconnection of the supply required in 411.3.2 of IEC 60364-4-41:2005 and be capable of withstanding the prospective fault current during the disconnection time of the protective device. The cross-sectional area of the protective earth conductor must be selected from the table below or calculated according to 543.1 of IEC 60364-5-54.

The table shows the minimum cross-sectional area of the protective earth conductor related to the phase conductor size according to IEC/UL 61800-5-1 when the phase conductor(s) and the protective earth conductor are made of the same metal. If they are different metals, the cross-sectional area of the protective

earth conductor must be determined in a manner which produces a conductance equivalent to that which results from the application of this table.

Cross-sectional area of the phase conductors S (mm^2)	Minimum cross-sectional area of the corresponding protective earth conductor S_p (mm^2)
$S \leq 16$	S [1]
$16 < S \leq 35$	16
$35 < S$	S/2

[1] For the minimum conductor size in IEC installations, refer to Additional grounding requirements – IEC.

If the protective earth conductor is not part of the input power cable or input power cable enclosure, the minimum permitted cross-sectional area is:

- 2.5 mm^2 if the conductor is mechanically protected,
  or
- 4 mm^2 if the conductor is not mechanically protected. If the equipment is cord-connected, the protective earth conductor must be the last conductor to be interrupted if there is a failure in the strain relief mechanism.

Additional grounding requirements – IEC

This section gives grounding requirements according to standard IEC/EN 61800-5-1.

Because the normal touch current of the drive is more than 3.5 mA AC or 10 mA DC:

- the minimum size of the protective earth conductor must comply with the local safety regulations for high protective earth conductor current equipment, and
- you must use one of these connection methods:
  1. a fixed connection and:
     - a protective earth conductor with a minimum cross-sectional area of 10 mm^2 Cu or 16 mm^2 Al (as an alternative when aluminum cables are permitted),
       or
     - a second protective earth conductor of the same cross-sectional area as the original protective earth conductor,
       or
     - a device that automatically disconnects the supply if the protective earth conductor is damaged.
  2. a connection with an industrial connector according to IEC 60309 and a minimum protective earth conductor cross-section of 2.5 mm^2 as part of a multi-conductor power cable. Sufficient strain relief must be provided.

If the protective earth conductor is routed through a plug and socket, or similar means of disconnection, it must not be possible to disconnect it unless power is simultaneously removed.

Note: You can use power cable shields as grounding conductors only when their conductivity is sufficient.

Additional grounding requirements – UL (NEC)

This section gives grounding requirements according to standard UL 61800-5-1.

The protective earth conductor must be sized as specified in Article 250.122 and table 250.122 of the National Electric Code, ANSI/NFPA 70.

For cord-connected equipment, it must not be possible to disconnect the protective earth conductor before power is removed.

Selecting the control cables

Shielding

Only use shielded control cables.

Use a double-shielded twisted pair cable for analog signals. ABB recommends this type of cable also for the pulse encoder signals. Use one individually shielded pair for each signal. Do not use common return for different analog signals.

A double-shielded cable (a) is the best alternative for low-voltage digital signals, but single-shielded (b) twisted pair cable is also acceptable.

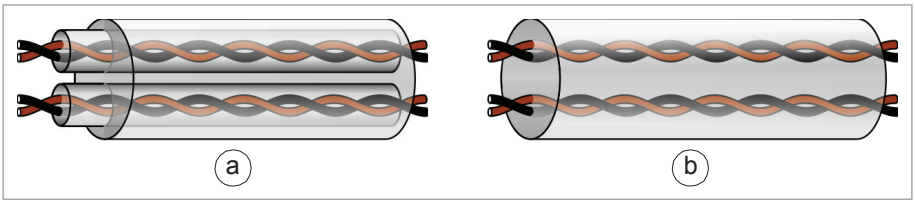

Signals in separate cables

Run analog and digital signals in separate, shielded cables. Do not mix 24 V DC and 115/230 V AC signals in the same cable.

Signals that can be run in the same cable

If their voltage does not exceed 48 V, relay-controlled signals can be run in the same cables as digital input signals. The relay-controlled signals should be run as twisted pairs.

Relay cable

The cable type with braided metallic shield (for example ÖLFLEX by LAPPKABEL, Germany) has been tested and approved by ABB.

Control panel to drive cable

Use EIA-485, Cat 5e (or better) cable with male RJ-45 connectors. The maximum length of the cable is 100 m (328 ft).

PC tool cable

Connect the Drive Composer PC tool to the drive through the USB port of the control panel. Use a USB Type A (PC) - Type Mini-B (control panel) cable. The maximum length of the cable is 3 m (9.8 ft).

Routing the cables

General guidelines – IEC

- Route the motor cable away from other cables. Motor cables of several drives can be run in parallel installed next to each other.
- Install the motor cable, input power cable and control cables on separate trays.
- Avoid long parallel runs of motor cables with other cables.
- Where control cables must cross power cables, make sure that they are arranged at an angle as near to 90 degrees as possible.
- Do not run extra cables through the drive.
- Make sure that the cable trays have good electrical bonding to each other and to the grounding electrodes. Aluminum tray systems can be used to improve local equalizing of potential.

The following figure illustrates the cable routing guidelines with an example drive.

Note: When motor cable is symmetrical and shielded and it has short parallel runs with other cables (< 1.5 m / 5 ft), distances between the motor cable and other cables can be reduced by half.

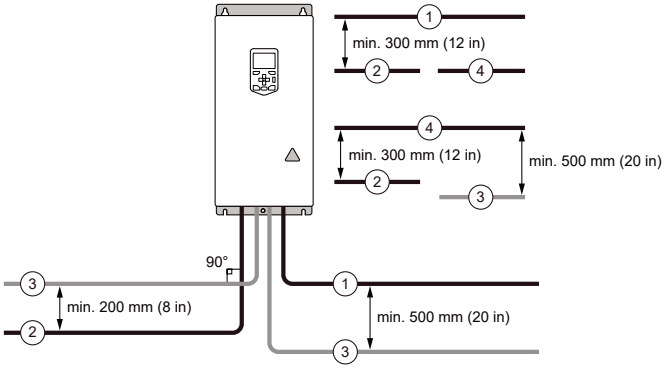

1	Motor cable
2	Input power cable
3	Control cable
4	Brake resistor or chopper cable (if any)

General guidelines – North America

Make sure that the installation is in accordance with national and local codes. Obey these general guidelines:

- Use separate conduits for the input power, motor, brake resistor (optional), and control cabling.
- Use separate conduit for each motor cabling.

The following figure illustrates the cable routing guidelines with an example drive.

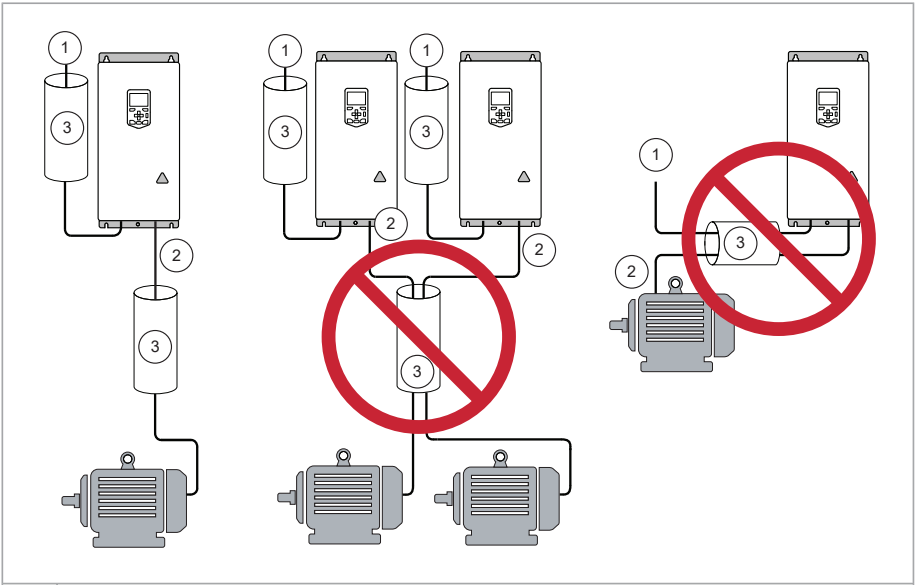

1	Input power cabling
2	Motor cabling
3	Conduit

Continuous motor cable shield/conduit and metal enclosure for equipment on the motor cable

To minimize the emission level when safety switches, contactors, connection boxes or similar equipment are installed on the motor cable between the drive and the motor:

- Install the equipment in a metal enclosure.
- Use either a symmetrical shielded cable, or install the cabling in a metal conduit.
- Make sure that there is a good and continuous galvanic connection in the shield/conduit between drive and motor.
- Connect the shield/conduit to the protective ground terminal of the drive and the motor.

Separate control cable ducts

Put 24 V DC and 230 V AC (120 V AC) control cables in separate ducts, unless the 24 V DC cable is insulated for 230 V AC (120 V AC) or insulated with an insulation sleeving for 230 V AC (120 V AC).

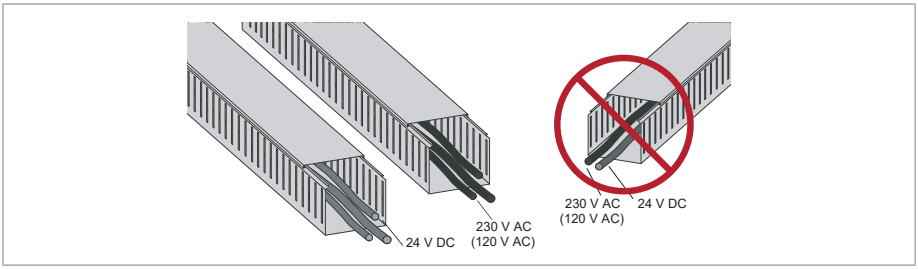

Protecting the drive, input power cable, motor and motor cable in short circuit situations and against thermal overload

Protecting the drive and the input power cable in short-circuits

Protect the drive and the input cable with fuses or a circuit breaker.

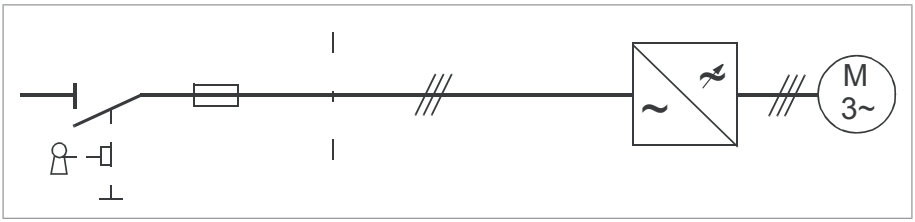

Select the fuses or circuit breakers according to local regulations for the input cable protection. Select the fuses or circuit breakers for the drive according to the instructions given in the technical data. The fuses or circuit breakers for the drive protection will restrict drive damage and prevent damage to adjoining equipment in case of a short-circuit inside the drive.

Note: If the fuses or circuit breakers for the drive protection are placed at the distribution board and the input cable is selected according to the nominal input current of the drive given in the technical data, the fuses or circuit breakers protect also the input cable in short-circuit situations, restrict drive damage and prevent damage to adjoining equipment in case of a short-circuit inside the drive. No separate fuses or circuit breakers for the input cable protection are required.

WARNING!
Due to the inherent operating principle and construction of circuit breakers, independent of the manufacturer, hot ionized gases can escape from the breaker enclosure in case of a short-circuit. To make sure of safe use, pay special attention to the installation and placement of the breakers. Obey the manufacturer's instructions.

Circuit breakers

See section Circuit breakers (IEC) (page 195) or Circuit breakers (UL) (page 196).

Protecting the motor and motor cable in short-circuits

The drive protects the motor cable and motor in a short-circuit situation when:

- the motor cable is sized correctly
- the motor cable type complies with the motor cable selection guidelines by ABB
- the cable length does not exceed the allowed maximum length specified for the drive
- the setting of parameter 99.10 Motor nominal power in the drive is equal with the value given on the motor rating plate.

The electronic power output short-circuit protection circuitry meets the requirements of IEC 60364-4-41 2005/AMD1.

Protecting the motor cables against thermal overload

The drive protects the motor cables against thermal overload when the cables are sized according to the nominal output current of the drive. No additional thermal protection devices are needed.

WARNING!
If the drive is connected to multiple motors, use a separate overload protection for each motor cable and motor. The drive overload protection is tuned for the total motor load. It may not detect an overload in one motor circuit only.

North America: The local code (NEC) requires an overload protection and a short-circuit protection for each motor circuit. Use, for example:

- manual motor protector
- circuit breaker, contactor and overload relay or
- fuses, contactor and overload relay.

Protecting the motor against thermal overload

According to regulations, the motor must be protected against thermal overload and the current must be switched off when overload is detected. The drive includes a motor thermal protection function that protects the motor and switches off the current when necessary. Depending on a drive parameter value, the function either monitors a calculated temperature value (based on a motor thermal model) or an actual temperature indication given by motor temperature sensors.

The motor thermal protection model supports thermal memory retention and speed sensitivity. The user can tune the thermal model further by feeding in additional motor and load data.

The most common temperature sensor types are PTC or Pt100.

For more information, see the firmware manual.

Protecting the motor against overload without thermal model or temperature sensors

Motor overload protection protects the motor against overload without using motor thermal model or temperature sensors.

Motor overload protection is required and specified by multiple standards including the US National Electric Code (NEC) and the common UL/IEC 61800-5-1 standard in conjunction with UL/IEC 60947-4-1. The standards allow for motor overload protection without external temperature sensors.

The protection feature of the drive allows the user to specify the class of operation in the same manner as the overload relays are specified in standards UL/IEC 60947-4-1 and NEMA ICS 2.

The motor overload protection supports thermal memory retention and speed sensitivity.

For more information, see drive firmware manual.

Implementing a motor temperature sensor connection

WARNING!
IEC 61800-5-1 requires double or reinforced insulation between live parts and accessible parts when:

- the accessible parts are not conductive, or
- the accessible parts are conductive, but not connected to the protective earth.

Obey this requirement when you plan the connection of the motor temperature sensor to the drive.

You have these implementation alternatives:

1. If there is double or reinforced insulation between the sensor and the live parts of the motor: You can connect the sensor directly to the analog/digital input(s) of the drive. See the control cable connection instructions. Make sure that the voltage is not more than the maximum allowed voltage over the sensor.
2. If there is basic insulation between the sensor and the live parts of the motor, or if the insulation type is not known: You can connect the sensor to the drive via an option module. The sensor and the module must form a double or reinforced insulation between the motor live parts and the drive control unit. See Connecting a motor temperature sensor to the drive through an option module (page 86). Make sure that the voltage does not exceed the maximum allowed voltage over the sensor.
3. If there is basic insulation between the sensor and the live parts of the motor, or if the insulation type is not known: You can connect a sensor to a digital input of the drive via an external relay. The sensor and the relay must form a double or reinforced insulation between the motor's live parts and the digital input of the drive. Make sure that the voltage does not exceed the maximum allowed voltage over the sensor.

Connecting a motor temperature sensor to the drive through an option module

This table shows:

- option module types that you can use for the motor temperature sensor connection
- insulation or isolation level that each option module forms between its temperature sensor connector and other connectors
- temperature sensor types that you can connect to each option module
- temperature sensor insulation requirement in order to form, together with the insulation of the option module, a reinforced insulation between the motor live parts and the drive control unit.

Option module		Temperature sensor type			Temperature sensor insulation requirement
Type	**Insulation/Isolation**	**PTC**	**KTY**	**Pt100, Pt1000**	
CMOD-02	Reinforced insulation between the sensor connector and other connectors (including drive control unit connector). The drive control unit is PELV compatible also when the module and a thermistor protection circuit are installed.	x	-	-	No special requirement
CPTC-02		x	-	-	No special requirement

For more information, refer to

- Connecting motor temperature sensors to the drive (page 146)
- CMOD-02 multifunction extension module (external 24 V AC/DC and isolated PTC interface) (page 293)
- CPTC-02 ATEX-certified thermistor protection module, Ex II (2) GD (option +L537+Q971) user's manual (3AXD50000030058 [English]).

Protecting the drive against ground faults

The drive is equipped with an internal ground fault protective function to protect the unit against ground faults in the motor and motor cable. This function is not a personnel safety or a fire protection feature. See the firmware manual for more information.

Residual current device compatibility

The drive is suitable for use with residual current devices of Type B.

Note: As standard, the drive contains capacitors connected between the main circuit and the frame. These capacitors and long motor cables increase the ground leakage current and may cause nuisance faults in residual current devices.

Implementing the emergency stop function

For safety reasons, install the emergency stop devices at each operator control station and at other operating stations where the emergency stop may be needed. Implement the emergency stop according to relevant standards.

Note: You can use the Safe torque off function of the drive to implement the Emergency stop function.

Implementing the Safe torque off function

See The Safe torque off function (page 237).

Implementing the power loss ride-through function

If the incoming supply voltage is cut off, the drive will continue to operate by utilizing the kinetic energy of the rotating motor. The drive will be fully operational as long as the motor rotates and generates energy to the drive.

If you equip the drive with a main contactor or breaker, make sure that it restores the drive input power after a short break. The contactor must either re-connect after the break automatically, or remain closed over the break. Depending on the contactor control circuit design, this can require an additional hold circuit, uninterruptible auxiliary power supply or auxiliary power supply buffering.

Note: If the power loss lasts so long that the drive trips on undervoltage, a fault reset and a fresh start command is required to continue operation.

Implement the power-loss ride-through function as follows:

1. Enable the power-loss ride-through function of the drive (parameter 30.31).
2. If the installation is equipped with a main contactor, prevent its tripping at the input power break. For example, use a time delay relay (hold) in the contactor control circuit.
3. Enable the automatic restart of the motor after a short power supply break:
   - Set the start mode to automatic (parameter 21.01 or 21.19, depending on the motor control mode being used).
   - Define the automatic restart time (parameter 21.18).

WARNING!
Make sure that a flying restart of the motor will not cause any danger. If you are in doubt, do not implement the power loss ride-through function.

Using power factor compensation capacitors with the drive

Power factor compensation is not needed with AC drives. However, if a drive is to be connected in a system with compensation capacitors installed, note the following restrictions.

WARNING!
Do not connect power factor compensation capacitors or harmonic filters to the motor cables (between the drive and the motor). They are not meant to be used with AC drives and can cause permanent damage to the drive or themselves.

If there are power factor compensation capacitors in parallel with the input of the drive:

1. Do not connect a high-power capacitor to the power line while the drive is connected. The connection will cause voltage transients that may trip or even damage the drive.
2. If capacitor load is increased/decreased step by step when the AC drive is connected to the power line, make sure that the connection steps are low enough not to cause voltage transients that would trip the drive.
3. Make sure that the power factor compensation unit is suitable for use in systems with AC drives, ie, harmonic generating loads. In such systems, the compensation unit should typically be equipped with a blocking reactor or harmonic filter.

Using a safety switch between the drive and the motor

ABB recommends to install a safety switch between the permanent magnet motor and the drive output. The switch is needed to isolate the motor from the drive during maintenance work on the drive.

Implementing an ATEX-certified motor thermal protection

With option +Q971, the drive provides ATEX-certified safe motor disconnection without contactor using the drive Safe torque off function. To implement the thermal protection of a motor in explosive atmosphere (Ex motor), you must also:

- use an ATEX-certified Ex motor
- order an ATEX-certified thermistor protection module for the drive (option +L537), or acquire and install an ATEX-compliant protection relay
- do the necessary connections.

For more information, see:

User's manual	Manual code (English)
CPTC-02 ATEX-certified thermistor protection module, Ex II (2) GD (option +L537+Q971) user's manual	3AXD50000030058
CPTC-02 ATEX-certified thermistor protection module, instructions for pairing the module with an ATEX-certified drive	3AXD10001243391

Controlling a contactor between drive and motor

The control of the output contactor depends on how you use the drive, that is, which motor control mode and which motor stop mode you select.

If you have the vector control mode and motor ramp stop selected, open the contactor as follows:

1. Give a stop command to the drive.
2. Wait until the drive decelerates the motor to zero speed.
3. Open the contactor.

If you have the vector control mode and motor coast stop selected, or scalar control mode selected, open the contactor as follows:

1. Give a stop command to the drive.
2. Open the contactor.

WARNING!
When the vector control mode is in use, never open the output contactor while the drive controls the motor. The vector control operates extremely fast, much faster than it takes for the contactor to open its contacts. When the contactor starts opening while the drive controls the motor, the vector control will try to maintain the load current by immediately increasing the drive output voltage to the maximum. This will damage, or even burn, the contactor completely.

Implementing a bypass connection

If bypassing is required, employ mechanically or electrically interlocked contactors between the motor and the drive and between the motor and the power line. Make sure with interlocking that the contactors cannot be closed simultaneously. The installation must be clearly marked as defined in IEC/EN/UL 61800-5-1, subclause 6.5.3, for example, “THIS MACHINE STARTS AUTOMATICALLY”.

WARNING!
Never connect the drive output to the electrical power network. The connection may damage the drive.

Example bypass connection

An example bypass connection is shown below.

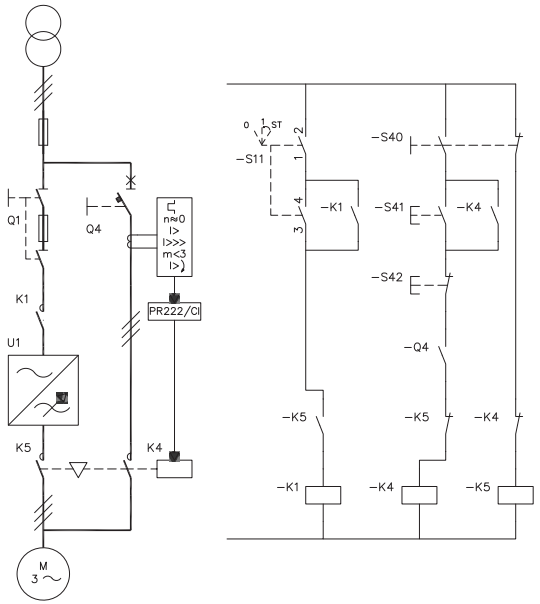

Q1	Drive main switch
Q4	Bypass circuit breaker
K1	Drive main contactor
K4	Bypass contactor
K5	Drive output contactor
S11	Drive main contactor on/off control
S40	Motor power supply selection (drive or direct-on-line)
S41	Start when motor is connected direct-on-line
S42	Stop when motor is connected direct-on-line

Switching the motor power supply from drive to direct-on-line

1. Stop the drive and the motor with the drive control panel stop key (drive in the local control mode) or the external stop signal (drive in the remote control mode).
2. Open the main contactor of the drive with S11.
3. Switch the motor power supply from the drive to direct-on-line with S40.
4. Wait for 10 seconds to allow the motor magnetization to dissipate.
5. Start the motor with S41.

Switching the motor power supply from direct-on-line to drive

1. Stop the motor with S42.
2. Switch the motor power supply from direct-on-line to the drive with S40.
3. Close the main contactor of the drive with switch S11 (-> turn to position ST for two seconds and leave to position 1).
4. Start the drive and the motor with the drive control panel start key (drive in the local control mode) or the external start signal (drive in remote control mode).

Protecting the contacts of relay outputs

Inductive loads (relays, contactors, motors) cause voltage transients when switched off.

Install the protective component as close to the inductive load as possible. Do not install protective components at the relay outputs.

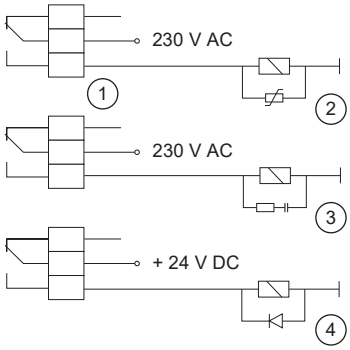

1	Relay output
2	Varistor
3	RC filter
4	Diode

Limiting relay output maximum voltages at high installation altitudes

See section Isolation areas (page 152).

6

Electrical installation – IEC

Contents of this chapter

This chapter contains instructions on the wiring of the drive.

Safety

WARNING!
If you are not a qualified electrical professional, do not do installation or maintenance work. Obey the safety instructions of the drive. If you ignore them, injury or death, or damage to the equipment can occur.

Required tools

To do the electrical installation, you need these tools:

- wire stripper
- screwdriver set (Torx, flat and/or Phillips, as appropriate)
- torque wrench.

Grounding the motor cable shield at the motor end

For minimum radio-frequency interference, ground the cable shield 360° at the cable entry of the motor terminal box.

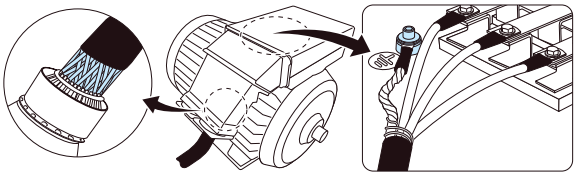

Measuring the insulation

Measuring the insulation resistance of the drive

WARNING!
Do not do any voltage withstand or insulation resistance tests on any part of the drive as testing can damage the drive. Every drive has been tested for insulation between the main circuit and the chassis at the factory. Also, there are voltage-limiting circuits inside the drive which cut down the testing voltage automatically.

Measuring the insulation resistance of the input power cable

Before you connect the input power cable to the drive, measure its insulation resistance according to local regulations.

Measuring the insulation resistance of the motor and motor cable

WARNING!
Obey the safety instructions of the drive. If you ignore them, injury or death, or damage to the equipment can occur. If you are not a qualified electrical professional, do not do installation, commissioning or maintenance work.

1. Do the steps in section Electrical safety precautions (page 20) before you start the work.
2. Make sure that the motor cable is disconnected from the drive output terminals.
3. Measure the insulation resistance between each phase conductor and the protective earth conductor. Use a measuring voltage of 1000 V DC. The insulation resistance of an ABB motor must be more than 100 Mohm (reference value at 25 °C [77 °F]). For the insulation resistance of other motors, refer to the manufacturer's instructions.

   Note: Moisture inside the motor reduces the insulation resistance. If you think that there is moisture in the motor, dry the motor and do the measurement again.

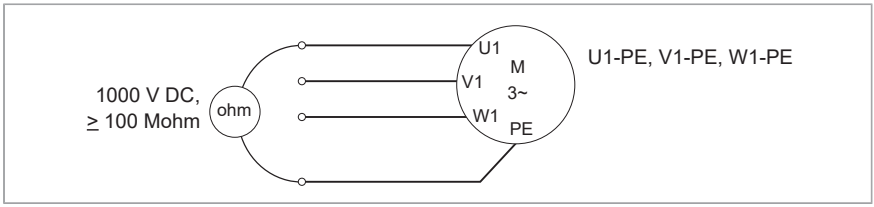

Measuring the insulation resistance of the brake resistor circuit

WARNING!
Obey the safety instructions of the drive. If you ignore them, injury or death, or damage to the equipment can occur. If you are not a qualified electrical professional, do not do installation, commissioning or maintenance work.

1. Stop the drive and do the steps in section Electrical safety precautions (page 20) before you start the work.
2. Make sure that the resistor cable is connected to the resistor and disconnected from the drive output terminals.
3. At the drive end, connect the R+ and R- conductors of the resistor cable together. Measure the insulation resistance between the conductors and the PE conductor with a measuring voltage of 1000 V DC. The insulation resistance must be more than 1 Mohm.

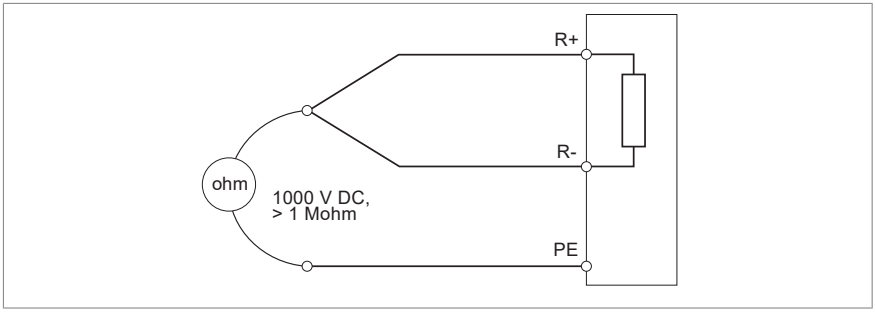

Grounding system compatibility check

The standard drive can be installed to a symmetrically grounded TN-S system. For other systems, see sections EMC filter and Ground-to-phase varistor (page 98) below.

EMC filter

A drive with the internal EMC filter connected can be installed to a symmetrically grounded TN-S system. If you install the drive to another system, you may need

to disconnect the EMC filter. See section When to disconnect EMC filter or ground-to-phase varistor: TN-S, IT, corner-grounded delta and midpoint-grounded delta systems and TT systems (page 98).

WARNING!
Do not install the drive with the EMC filter connected to a system that the filter is not suitable for. This can cause danger, or damage the drive.

Note: When the integrated EMC filter is disconnected, the drive EMC compatibility is considerably reduced. See section Motor connection data (page 214).

Ground-to-phase varistor

A standard drive with the ground-to-phase varistor connected can be installed to a symmetrically grounded TN-S system. If you install the drive to another system, you may need to disconnect the varistor. See section When to disconnect EMC filter or ground-to-phase varistor: TN-S, IT, corner-grounded delta and midpoint-grounded delta systems and TT systems (page 98).

WARNING!
Do not install the drive with the ground-to-phase varistor connected to a system that the varistor is not suitable for. If you do, the varistor circuit can be damaged.

When to disconnect EMC filter or ground-to-phase varistor: TN-S, IT, corner-grounded delta and midpoint-grounded delta systems and TT systems

Requirements for disconnecting EMC filter and varistor and additional requirements for different electrical power systems are given below.

Symmetrically grounded TN systems (TN-S systems, ie, center-grounded wye)	
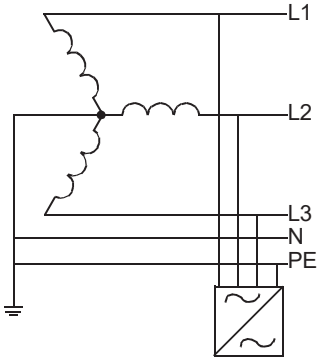	Do not remove EMC or VAR screws.

Corner-grounded delta systems ≤ 600 V	
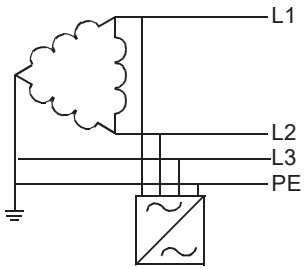	R3: Do not remove EMC or VAR screws. R6: Remove EMC screw. Do not remove VAR screw. See Note 1 below. R8: Remove EMC DC and VAR screws.
Midpoint-grounded delta systems ≤ 600 V	
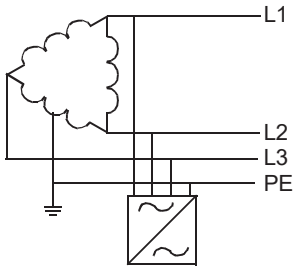	R3: Do not remove EMC or VAR screws. R6: Remove EMC screw. Do not remove VAR screw. See Note 1 below. R8: Remove EMC DC and VAR screws.
IT systems (ungrounded or high-resistance grounded [>30 ohms])	
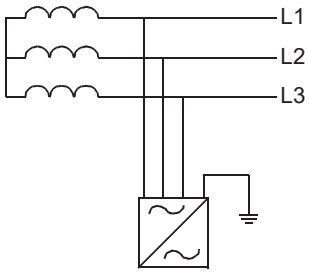	R3: Remove EMC and VAR screws. R6: Remove EMC and VAR screws. R8: Remove EMC DC and VAR screws.
TT systems	

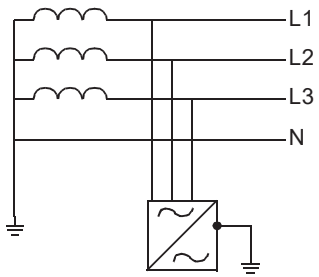

R3: Remove EMC and VAR screws.

R6: Remove EMC and VAR screws.

R8: Remove EMC DC and VAR screws.

Residual current device has to be installed in the supply system.

Note:

- Because the EMC filter screws have been removed, ABB does not guarantee the EMC category.
- ABB does not guarantee the functioning of the ground leakage detector built inside the drive.
- In large systems the residual current device can trip without a real reason.

Note 1: Frames R3 and R6 are evaluated for use on corner-grounded systems and midpoint-grounded delta systems by UL standards. They are not evaluated by IEC standards for use on corner-grounded or midpoint-grounded systems.

Note 2: These are the EMC filter and varistor screws of different drive frame sizes.

Frame size	EMC filter screws	Ground-to-phase varistor screws
R3	EMC	VAR
R6	EMC	VAR
R8	EMC DC	VAR [1)]

1) VAR screw functions also as EMC AC screws in frame R8.

Identifying the grounding system of the electrical power network

WARNING!
Only a qualified electrical professional may do the work instructed in this section. Depending on the installation site, the work may even be categorized as live working. Continue only if you are an electrical professional certified for the work. Obey the local regulations. If you ignore them, injury or death can occur.

To identify the grounding system, examine the supply transformer connection. See the applicable electrical diagrams of the building. If that is not possible, measure these voltages at the distribution board, and use the table to define the grounding system type.

1. input voltage line to line (U_{L-L})
2. input voltage line 1 to ground (U_{L1-G})
3. input voltage line 2 to ground (U_{L2-G})
4. input voltage line 3 to ground (U_{L3-G}).

The table below shows the line-to-ground voltages in relation to the line-to-line voltage for each grounding system.

U_{L-L}	U_{L1-G}	U_{L2-G}	U_{L3-G}	Electrical power system type
X	0.58·X	0.58·X	0.58·X	TN-S system (symmetrically grounded)
X	1.0·X	1.0·X	0	Corner-grounded delta system (nonsymmetrical)
X	0.866·X	0.5·X	0.5·X	Midpoint-grounded delta system (nonsymmetrical)
X	Varying level versus time	Varying level versus time	Varying level versus time	IT systems (ungrounded or high-resistance-grounded [>30 ohms]) nonsymmetrical
X	Varying level versus time	Varying level versus time	Varying level versus time	TT system (the protective earth connection for the consumer is provided by a local earth electrode, and there is another independently installed at the generator)

Disconnecting integrated EMC filter and ground-to-phase varistor – frame R3

1. Stop the drive and do the steps in section Electrical safety precautions (page 20) before you start the work.
2. Remove the front cover.
3. Remove the EMC screw.
4. Remove the VAR screw.

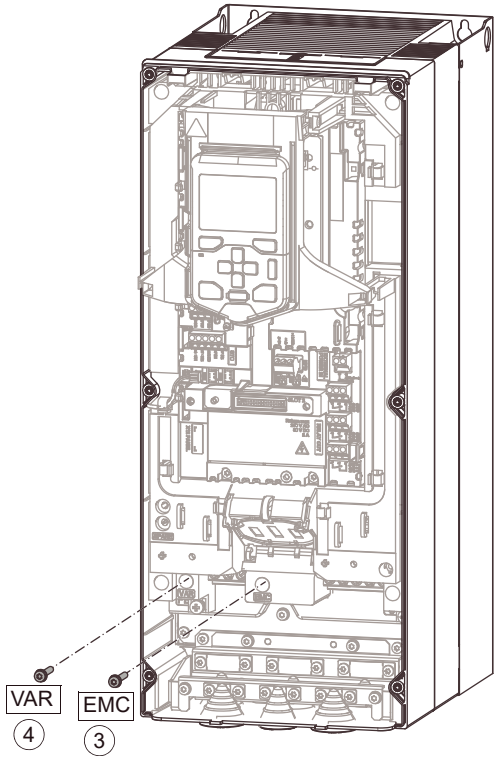

Disconnecting integrated EMC filter and ground-to-phase varistor – frame R6

1. Stop the drive and do the steps in section Electrical safety precautions (page 20) before you start the work.
2. Remove the front cover and the lower front cover.
3. Remove the VAR screw.
4. Remove the EMC screw.

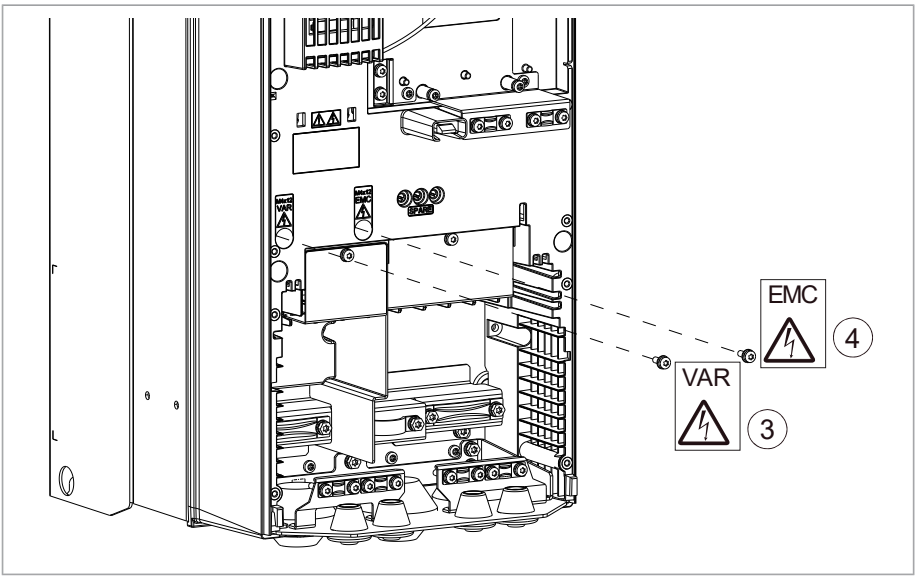

Disconnecting integrated EMC filter and ground-to-phase varistor – frame R8

1. Stop the drive and do the steps in section Electrical safety precautions (page 20) before you start the work.
2. Remove the front cover if it is not already removed.
3. Remove the VAR screw.
4. Remove the EMC DC screw.

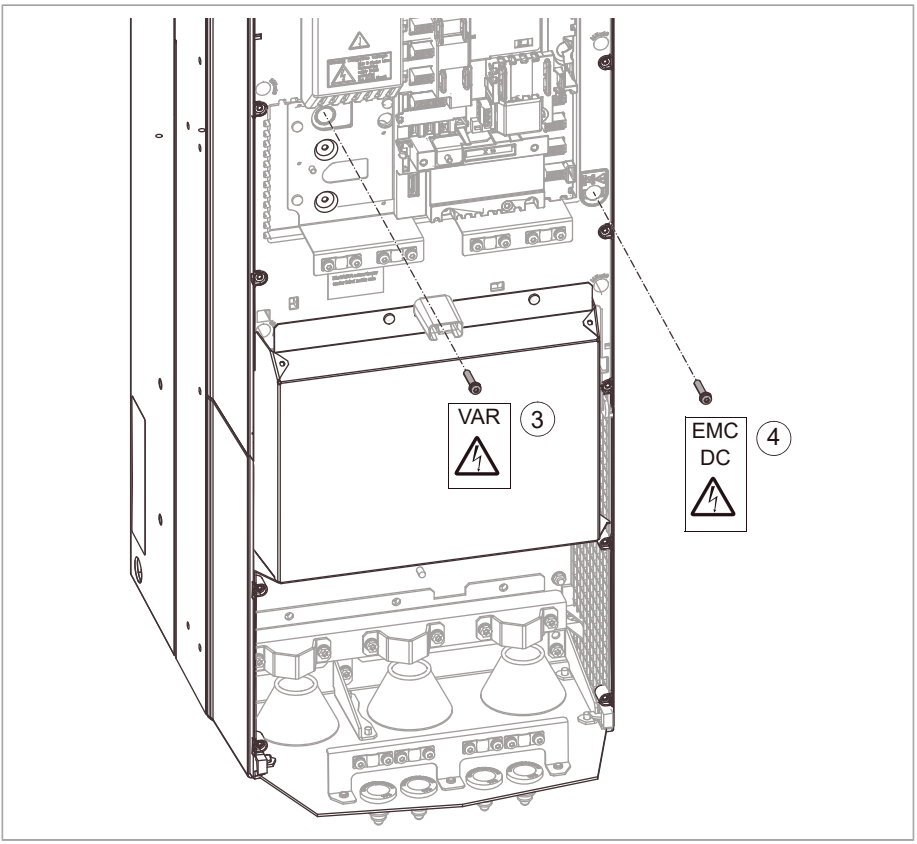

Connecting the power cables

Connection diagram

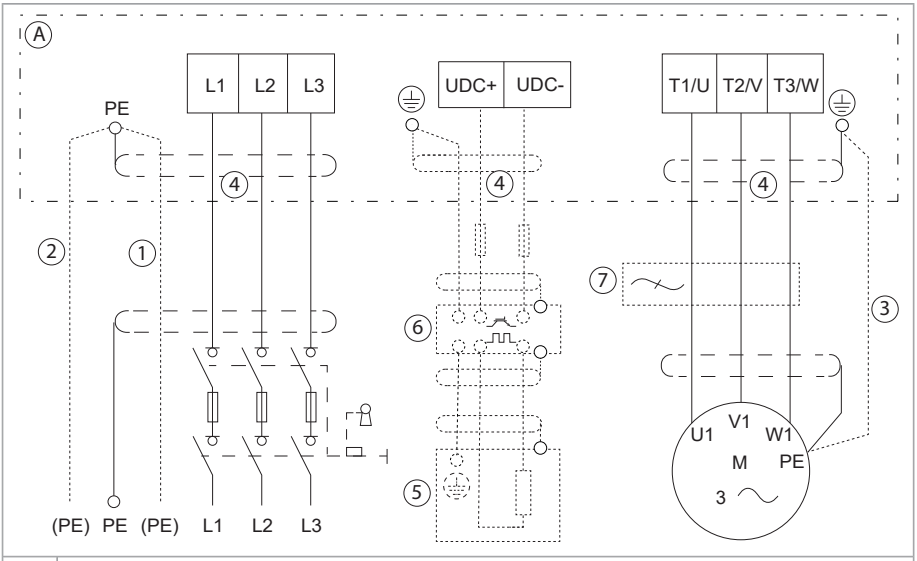

A	Drive
1	Two protective earth (ground) conductors. Drive safety standard IEC/ EN 61800-5-1 requires two PE conductors, if the cross-sectional area of the PE conductor is less than 10mm2 Cu or 16 mm2 Al. For example, you can use the cable shield in addition to the fourth conductor.
2	Use a separate grounding cable or a cable with a separate PE conductor for the line side, if the conductivity of the fourth conductor or shield does not meet the requirements for the PE conductor.
3	Use a separate grounding cable for the motor side, if the conductivity of the shield is not sufficient, or if there is no symmetrically constructed PE conductor in the cable.
4	ABB requires 360° grounding of the cable shield for the motor cable. ABB also recommends it for the input power cable.
5	External brake resistor (optional)
6	External brake chopper (optional)
7	If necessary, install an external filter (du/dt or sine filter). See Common mode, du/dt and sine filters (page 267).

Note: If there is a symmetrically constructed grounding conductor on the motor cable in addition to the conductive shield, connect the grounding conductor to the grounding terminal at the drive and motor ends.

Do not use an asymmetrically constructed motor cable for motors above 30 kW. See section Selecting the power cables (page 72).

Connecting its fourth conductor at the motor end increases bearing currents and causes extra wear.

Connection procedure

The procedure of connecting the power cables to the standard drive is described below. For the procedure with UK gland plate (option +H358), see also ACS880-11, ACS880-31, ACH580-31 and ACQ580-31 UK gland plate (+H358) installation guide (3AXD50000110711 [English]).

1. To remove the R3 front cover (R6 and R8 upper front cover), lift the cover from the bottom outwards (1a) and then up (1b).

R3 – IP21	R3 – IP55
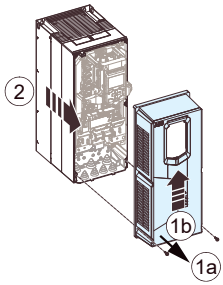	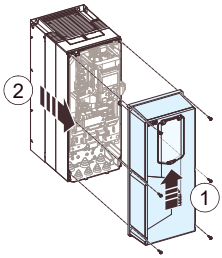

To remove the R6 and R8 lower front cover, slide it downwards (3a) and then forward (3b). For IP55 frame R8, disconnect the power supply wire of the auxiliary cooling fan.

R6, R8 – IP21	R6, R8 – IP55
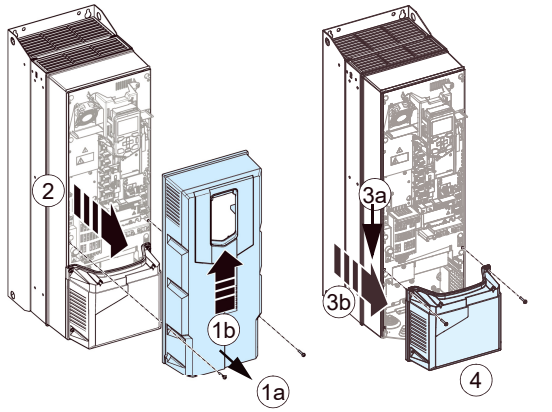	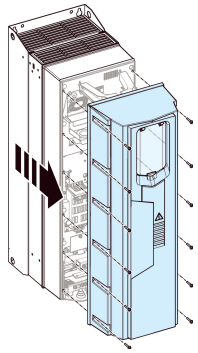

2. Attach the residual voltage warning sticker in the local language.

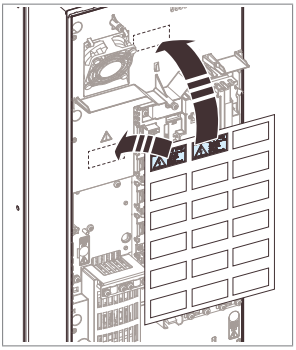

3. <u>For frames R6 and R8:</u> Remove the shroud on the power cable terminals.

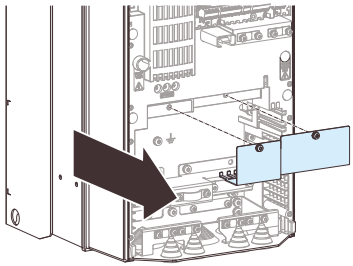 R6	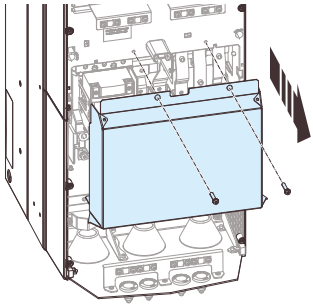 R8

4. For frame R6: If you need more working space, unscrew the screw and lift the EMC plate off. Install the EMC plate again after you have installed the motor and input power cables.
   For frame R8: Remove the EMC cover plates (4a). Remove the EMC side plates (4b).

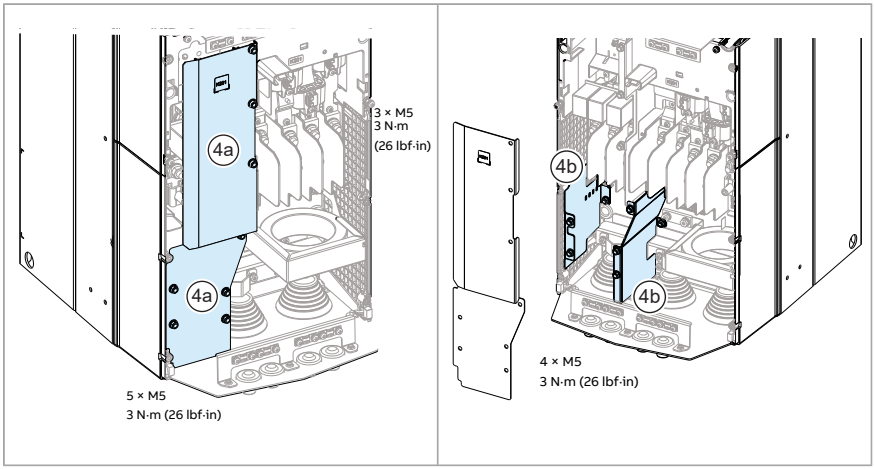

5. For frame R8: For easier installation, you can remove the side plates.

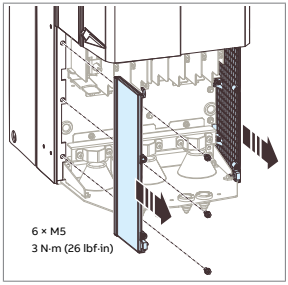

6. Remove the rubber grommets from the cable entry plate for the cables you want to install. Insert the grommets pointing down in the unused cable entry plate holes.

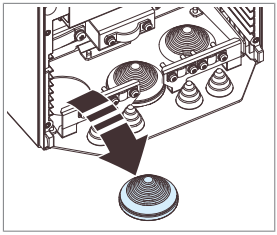

7. Cut an adequate hole into the rubber grommet. Slide the grommet onto the cable.

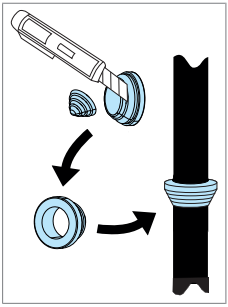

8. Prepare the ends of the cables as shown in the figure. Two different motor cable types are shown. If you use aluminum cables, put grease onto the peeled aluminum cable before you connect it to the drive.

   Note: The bare shield will be grounded 360°.

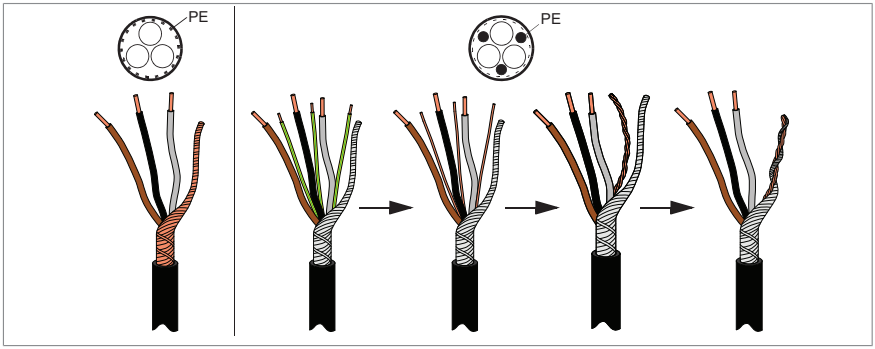

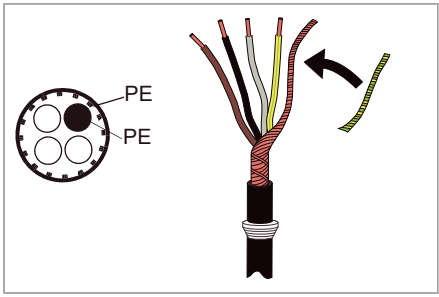

Only allowed with phase conductor cross-section less than 10 mm^2 (8 AWG)

9. Put the cable through the hole of the cable entry plate and attach the grommet to the hole.

10. Connect the cables:
    - Ground the shield 360° by tightening the clamp of the power cable grounding shelf onto the stripped part of the cable.
    - Connect the twisted shield of the cable to the grounding terminal.
    - Connect the additional PE conductors (if any).
    - For frame R8: Install the common mode filter. For instructions, see Common mode filter kit for ACS880-01 frame R7, and for ACS880-11, ACS880-31, ACH580-31 and ACQ580-31 frame R8 installation instructions (3AXD50000015179 [English]).
    - Connect the phase conductors of the motor cable to the T1/U, T2/V and T3/W terminals and the phase conductors of the input cable to the L1, L2 and L3 terminals.
    - If the DC cables are present, cut off one phase conductor and isolate the end.

      Connect the remaining conductors to the UDC+ and UDC- terminals.

      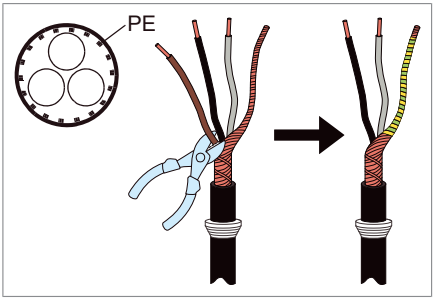

    - Tighten the screws to the torque given in the installation drawing below.

R3

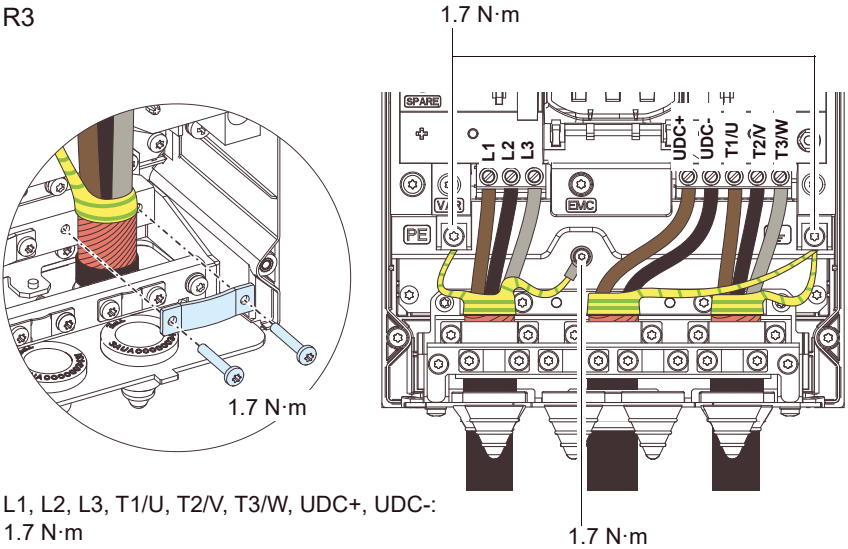

L1, L2, L3, T1/U, T2/V, T3/W, UDC+, UDC-:
1.7 N·m

R6

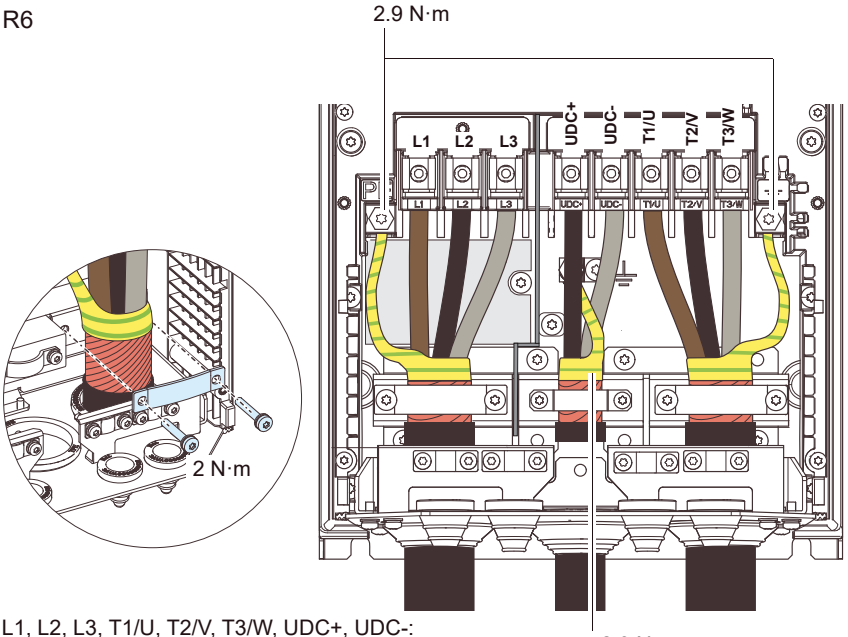

L1, L2, L3, T1/U, T2/V, T3/W, UDC+, UDC-:
15 N·m

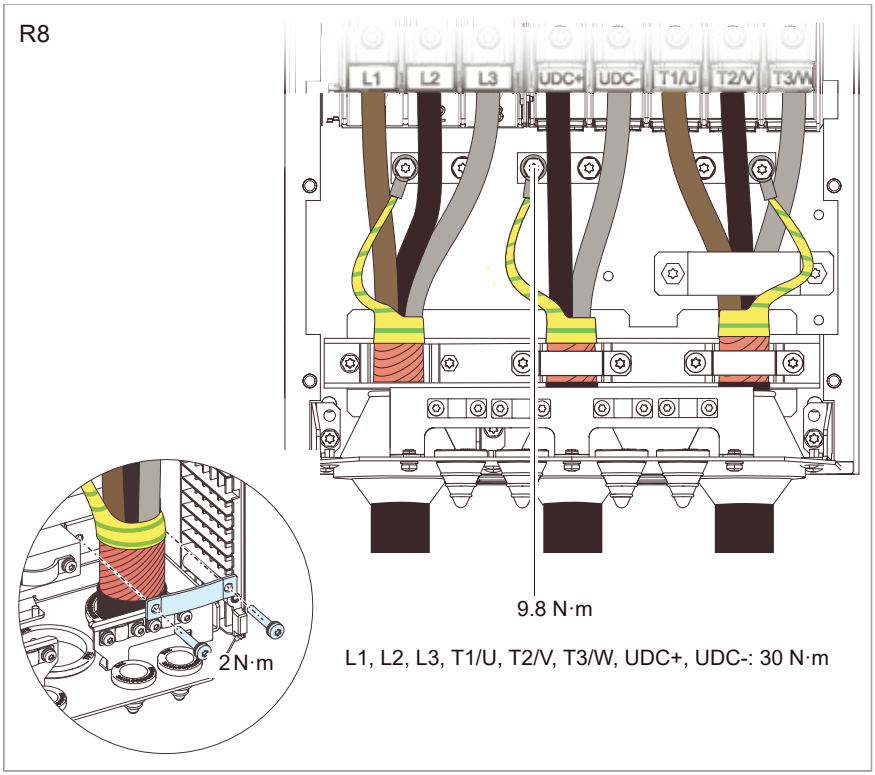

Note: For frame R8: Install the side plates if removed.

Note: For frame R8: The power cable connectors can be detached. For the instructions, see section R8 power cable connection if you detach the cable connectors (page 114).

11. For frame R8: Install the EMC plates in reverse order. See step 4.
12. For frame R6 types bigger than -040A-x: Cut tabs in the shroud for the installed cables.

13. Install the shroud onto the power cable connection terminals.

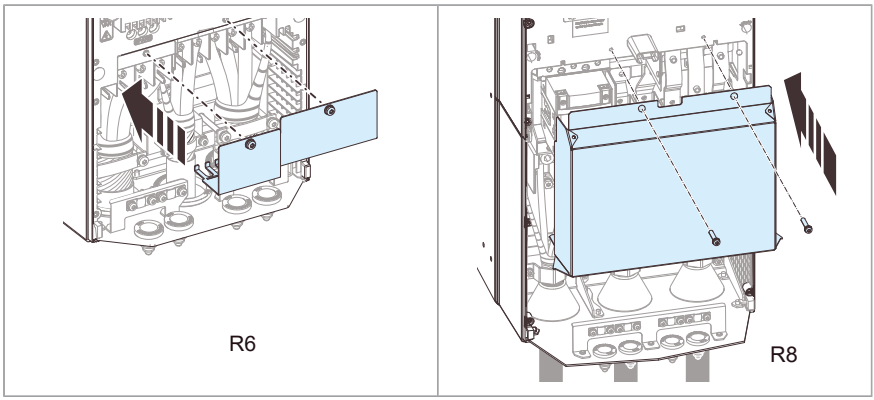

R8 power cable connection if you detach the cable connectors

The power cable connectors of frame R8 are detachable. If you detach them, you can connect the cables with cable lugs as follows:

- Remove the nut that attaches the connector to the terminal post and remove the connector.
- Alternative 1: Put the conductor to the connector. Tighten to a torque of 30 N·m. Put the connector back onto the post. Tighten the connector to a torque of 16 N·m.
- Alternative 2: Attach a cable lug to the conductor. Put the cable lug onto the post. Tighten the nut to a torque of 16 N·m.

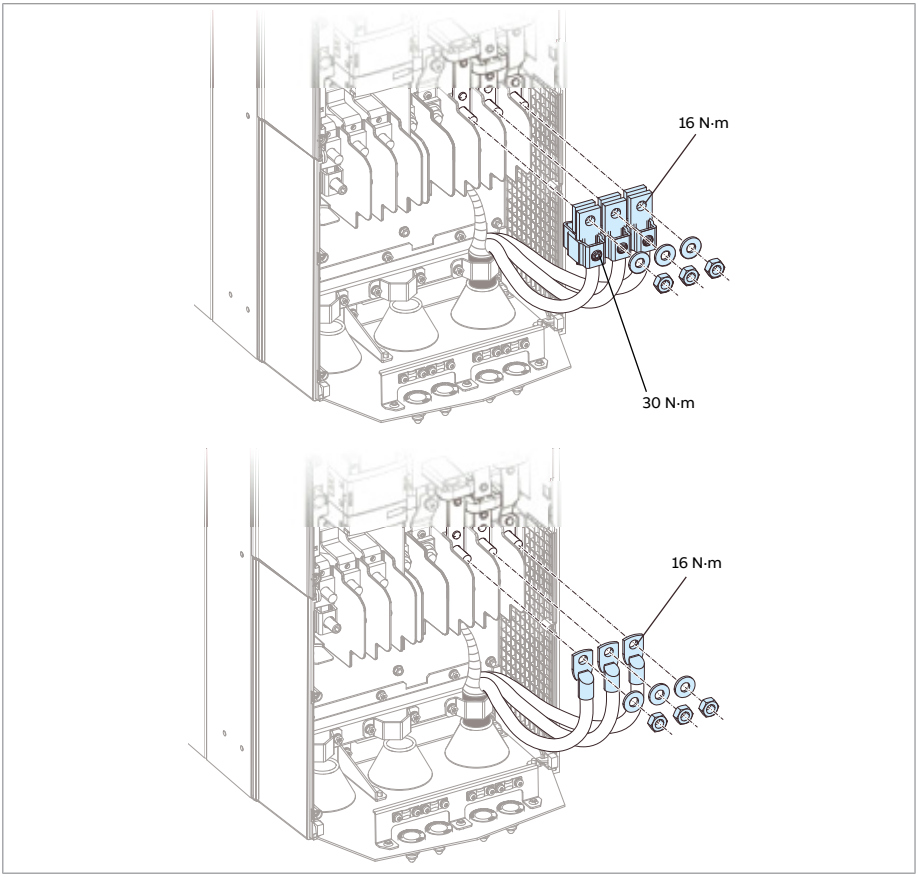

Connecting the control cables

Connection diagram

See Default I/O connection diagram (page 143) for the default I/O connections of the drive.

Connection procedure

WARNING!
Obey the safety instructions of the drive. If you ignore them, injury or death, or damage to the equipment can occur.

1. Stop the drive and do the steps in section Electrical safety precautions (page 20) before you start the work.
2. Remove the front cover(s) if not already removed.
3. For frame R3: Pull the control panel holder up.

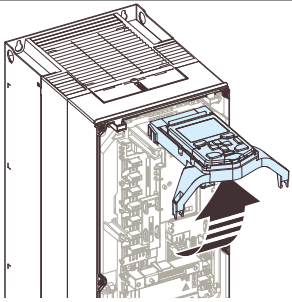

4. Cut an adequate hole into the rubber grommet and slide the grommet onto the cable. Slide the cable through a hole in the bottom plate and attach the grommet to the hole.
5. Route the cable as shown in the figures below.
6. Ground the outer shield of the cable 360° under the grounding clamp at the cable entry. Keep the cable unstripped as close to the terminals of the control unit as possible. Secure the cables inside the drive mechanically.
7. Ground the pair-cable shields and grounding wire at the grounding terminal (SCR) of the control unit.
8. Connect the conductors to the appropriate terminals of the control unit and tighten to 0.5 … 0.6 N·m. See Default I/O connection diagram (page 143).

Note:

- Leave the other ends of the control cable shields unconnected or ground them indirectly through a high-frequency capacitor with a few nanofarads, eg, 3.3 nF / 630 V. The shield can also be grounded directly at both ends if they are in the same ground line with no significant voltage drop between the end points.
- Keep any signal wire pairs twisted as close to the terminals as possible. Twisting the wire with its return wire reduces disturbances caused by inductive coupling.

R3

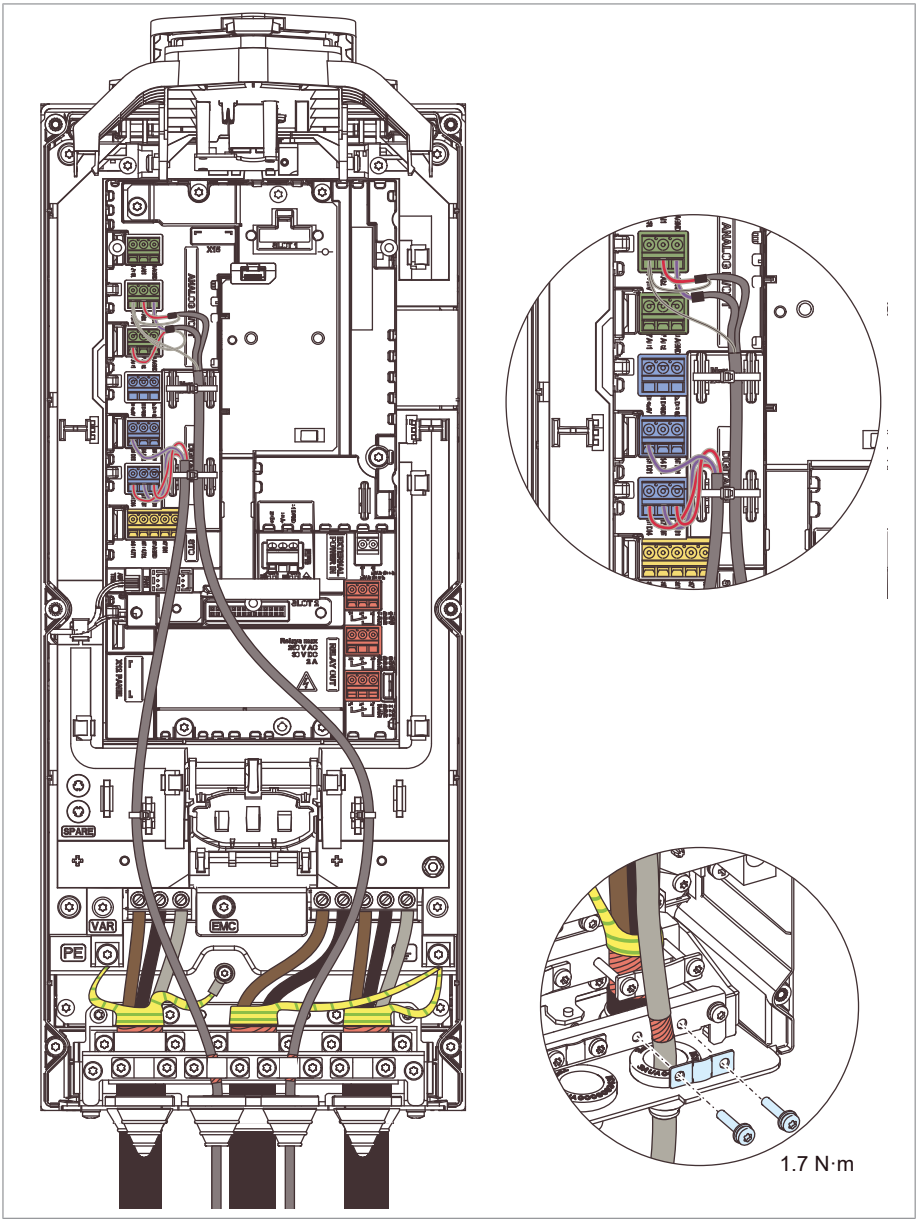

R6

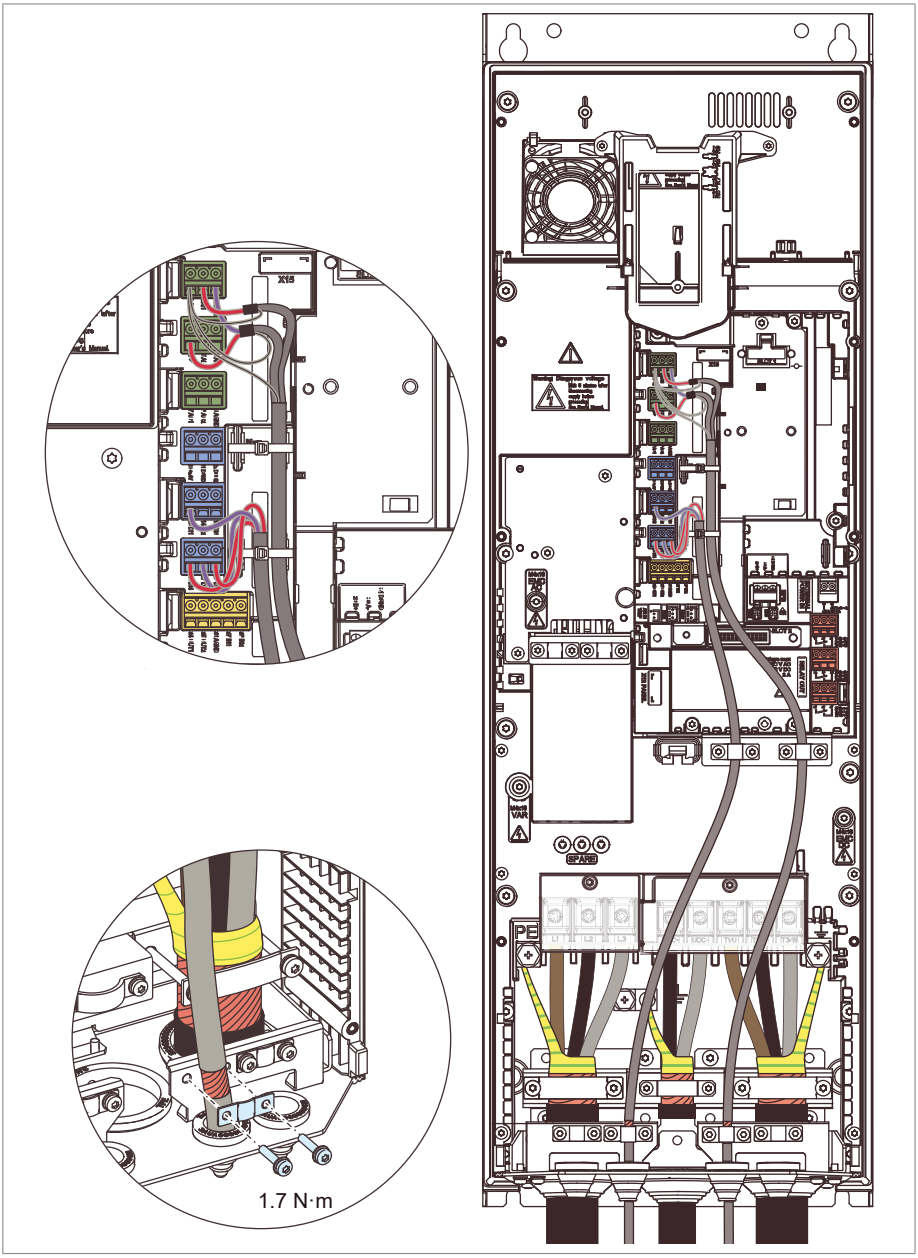

R8

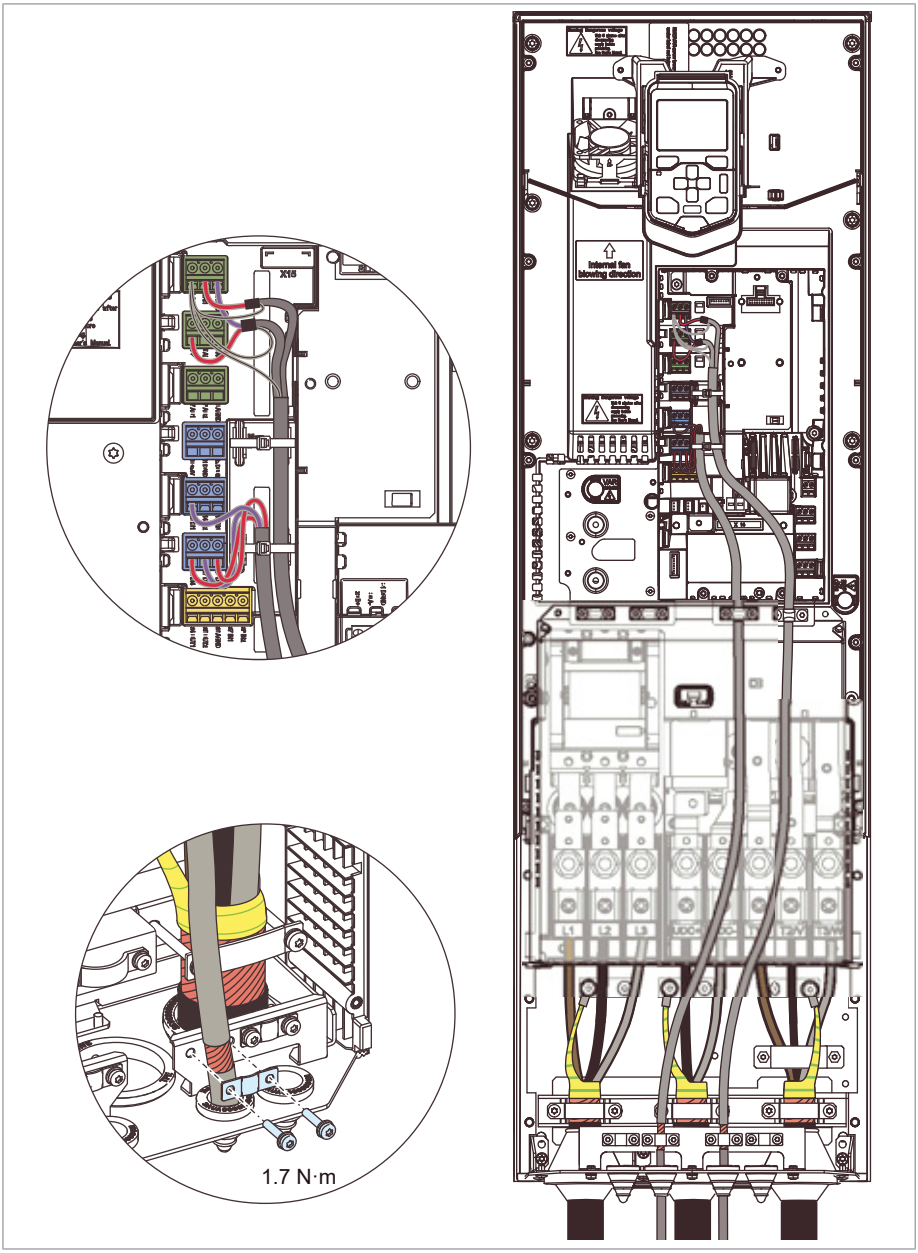

Installing option modules

WARNING!
Obey the safety instructions of the drive. If you ignore them, injury or death, or damage to the equipment can occur.

1. Stop the drive and do the steps in section Electrical safety precautions (page 20) before you start the work.

Option slot 2 (I/O extension modules)

1. Put the module carefully into its position on the control unit.
2. Tighten the mounting screw.
3. Tighten the grounding screw (CHASSIS) to 0.8 N·m (7 lbf·in). The screw grounds the module. This is necessary for fulfilling the EMC requirements and for correct operation of the module.

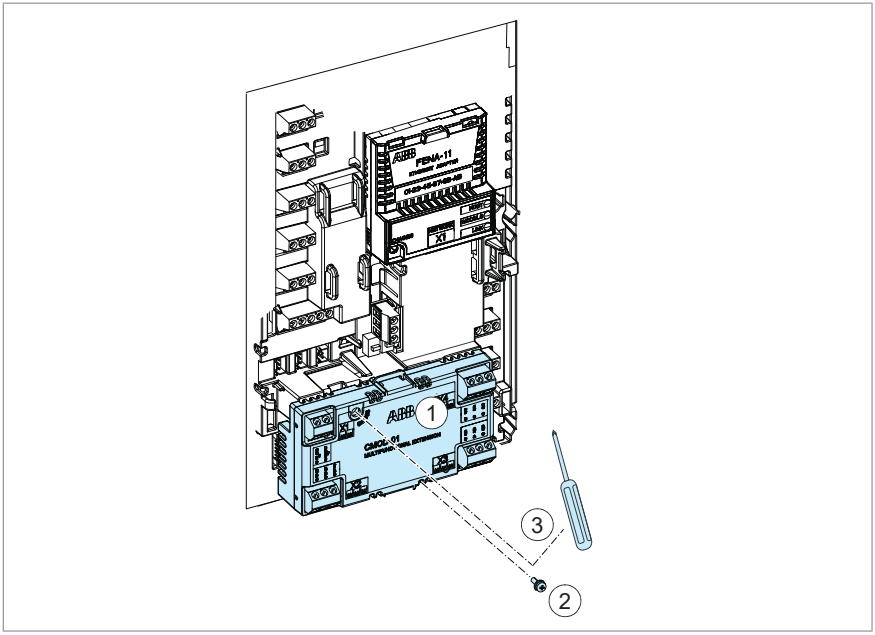

Option slot 1 (fieldbus adapter modules)

1. Put the module carefully into its position on the control unit.
2. Tighten the mounting screw (CHASSIS) to 0.8 N·m (7 lbf·in). The screw tightens the connections and grounds the module. This is necessary for fulfilling the EMC requirements and for correct operation of the module.

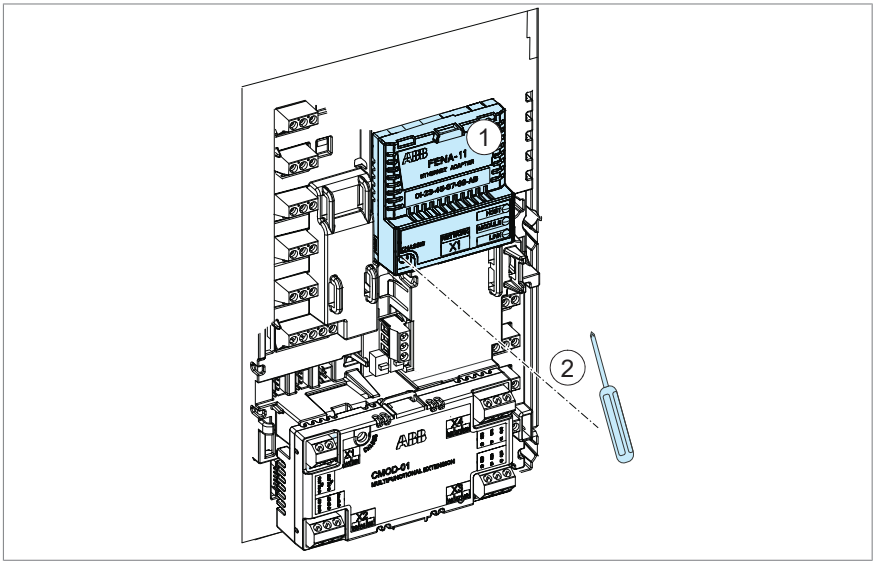

Wiring the optional modules

See the appropriate option module manual or for I/O options the appropriate chapter in this manual.

Reinstalling cover(s)

After installation, reinstall the covers. For IP55 (UL Type 12) frame R8, connect the secondary auxiliary cooling fan power supply wire, see section Replacing the auxiliary cooling fan in the IP55 (UL Type 12) cover, frame R8 (page 173).

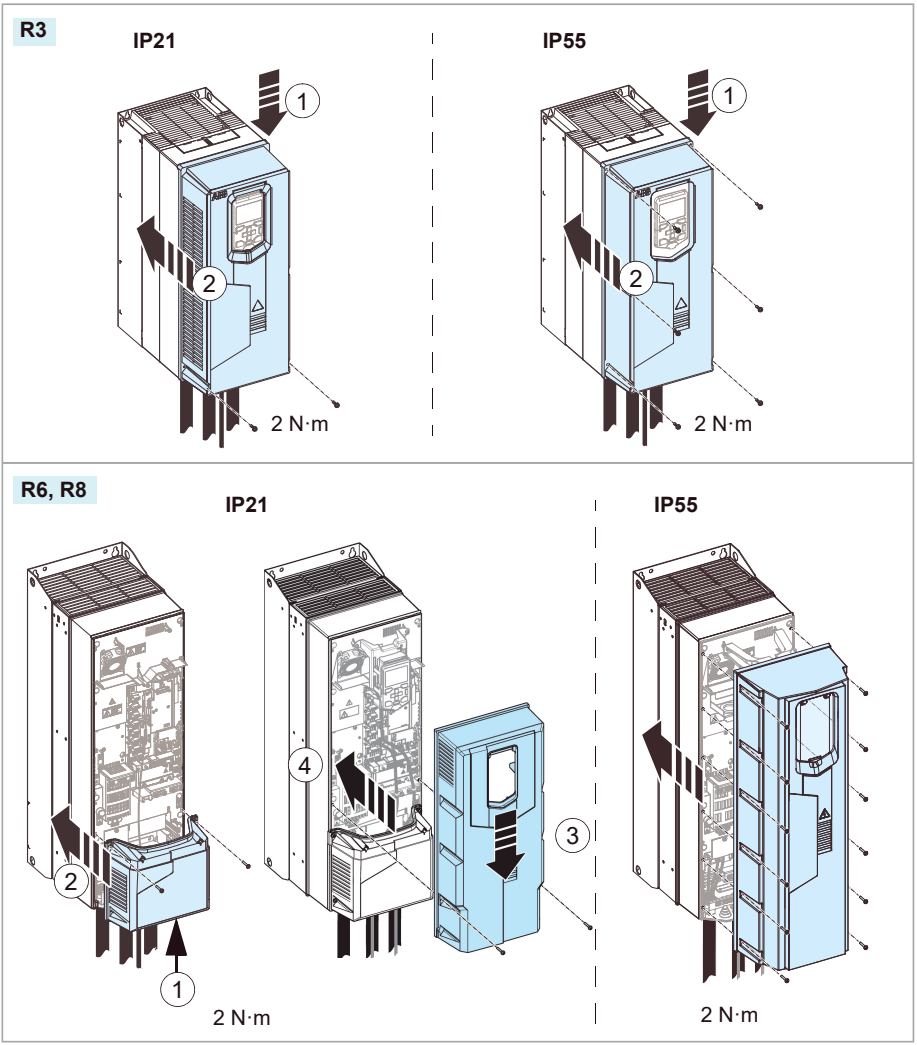

Connecting a PC

WARNING!
Do not connect the PC directly to the control panel connector of the control unit as this can cause damage.

A PC (with, for example, the Drive composer PC tool) can be connected as follows:

1. To connect a control panel to the unit, either
   - insert the control panel into the panel holder or platform, or
   - use an Ethernet (eg, Cat 5e) networking cable.
2. Remove the USB connector cover on the front of the control panel.
3. Connect an USB cable (Type A to Type Mini-B) between the USB connector on the control panel (3a) and a free USB port on the PC (3b).
4. The panel will display an indication whenever the connection is active.
5. See the documentation of the PC tool for setup instructions.

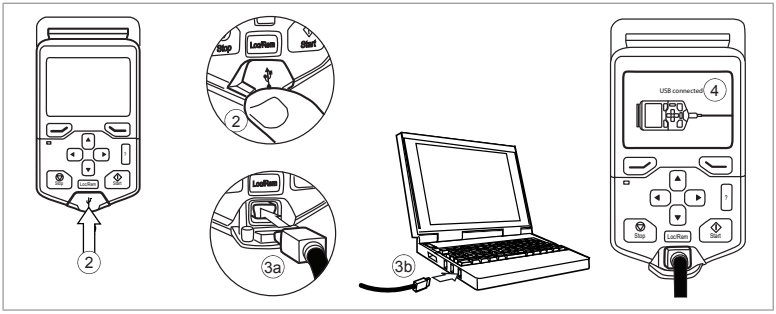

Connecting a remote panel, or chaining one panel to several drives

You can connect a drive control panel remotely to the drive, or chain the control panel or a PC to several drives on a panel bus with a CDPI-01 communication adapter module. See CDPI-01 communication adapter module user's manual (3AXD50000009929 [English]).

7

Electrical installation – North America (NEC)

Contents of this chapter

The chapter describes how to check the insulation of the assembly and the compatibility with other than symmetrically grounding TN-S systems. It then shows how to connect the power and control cables, install optional modules and connect a PC.

Safety

WARNING!
If you are not a qualified electrical professional, do not do installation or maintenance work. Obey the safety instructions of the drive. If you ignore them, injury or death, or damage to the equipment can occur.

Required tools

To do the electrical installation, you need these tools:

- wire stripper
- screwdriver set (Torx, flat and/or Phillips, as appropriate)
- torque wrench.

Measuring the installation

See section Measuring the insulation (page 96).

Grounding system compatibility check

See section Grounding system compatibility check (page 97).

Connecting the power cables

Connection diagram

Note: NEC installation can include separate insulated conductors inside a conduit, shielded VFD cable in conduit, or shielded VFD cable without conduit. The normal dashed symbol (3) in this diagram represents the shield of shielded VFD cable. The same solid symbol (2) represents conduit.

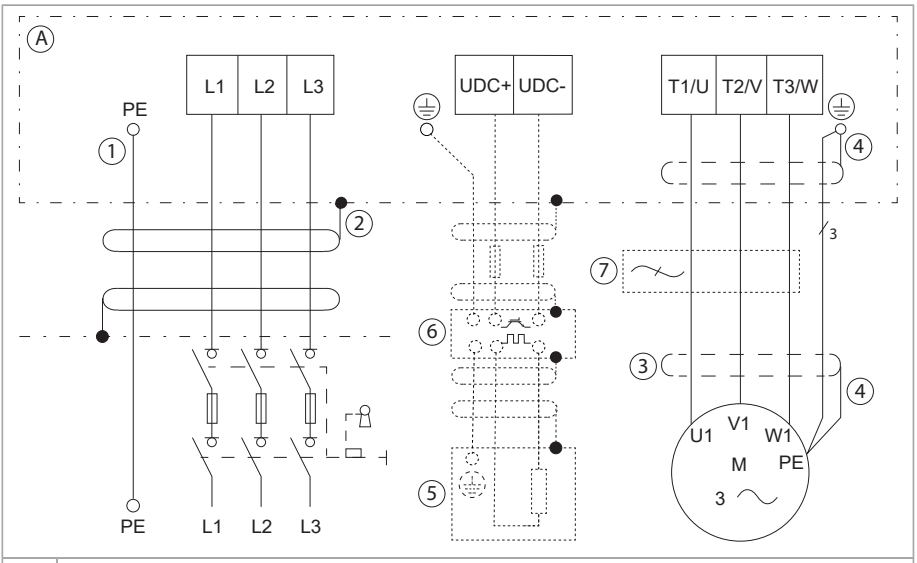

A	Drive
1	Insulated ground conductor in a conduit: Ground to drive's PE terminal and to the distribution panel ground bus. For a VFD cable installation see 4.
2	Conduit ground: Bond the conduit to the drive's conduit box and to the distribution panel enclosure. For a VFD cable installation see 3.
3	Shield of a VFD shielded cable: Ground the shield 360° under drive's grounding clamp. Then twist with the ground conductors and connect under the drive's ground terminal. Ground the shield also 360° at the motor end, then twist and connect under the motor's ground terminal. For a conduit installation see 2.

4	Symmetrically constructed grounding conductors inside a VFD shielded cable: Twist together, combine with the shield and connect under the drive's ground terminal and under the motor's ground terminal. For a conduit installation see 2.
5	External brake resistor connection (if used). For a conduit installation: See 1 and 2. For a VFD cable installation: See 3 and 4. In addition, cut the third phase conductor which is not needed for the brake resistor connection. See chapter Resistor braking (page 259).
6	External brake chopper (if used). See chapter Resistor braking (page 259).
7	If necessary, install an external filter (du/dt, common mode, or sine filter). Filters are available from ABB.
Note: All openings in the drive enclosure must be closed with UL listed devices having the same Type rating as the drive Type.	

Connection procedure

The procedure of connecting the power cables to the standard drive is described below.

1. To remove the R3 front cover (R6 and R8 upper front cover), lift the cover from the bottom outwards (1a) and then up (1b).

R3 – UL Type 1	R3 – UL Type 12
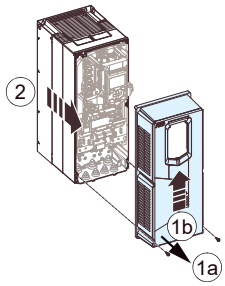	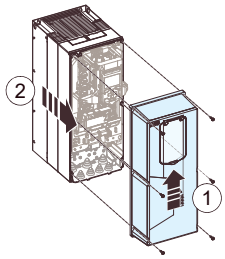

To remove the R6 and R8 lower front cover, slide it downwards (3a) and then forward (3b). For UL Type 12 frame R8, disconnect the power supply wire of the auxiliary cooling fan.

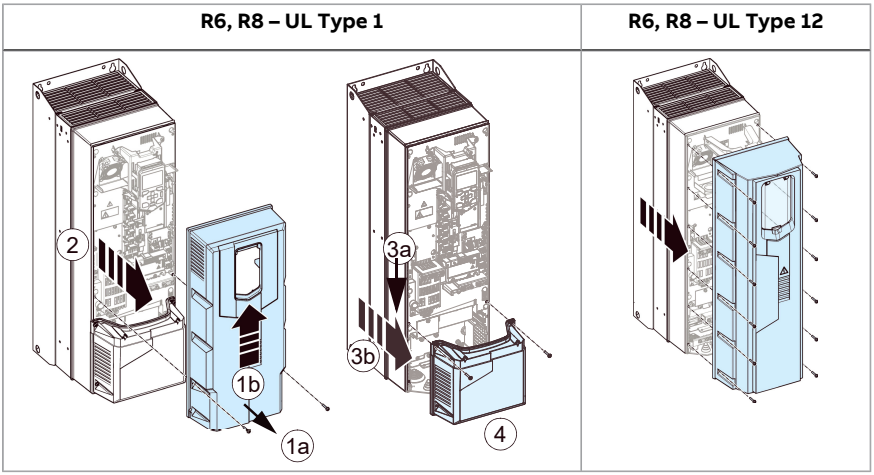

2. Attach the residual voltage warning sticker in the local language.

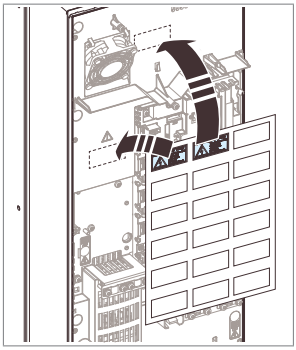

3. <u>For frames R6 and R8:</u> Remove the shroud on the power cable terminals.

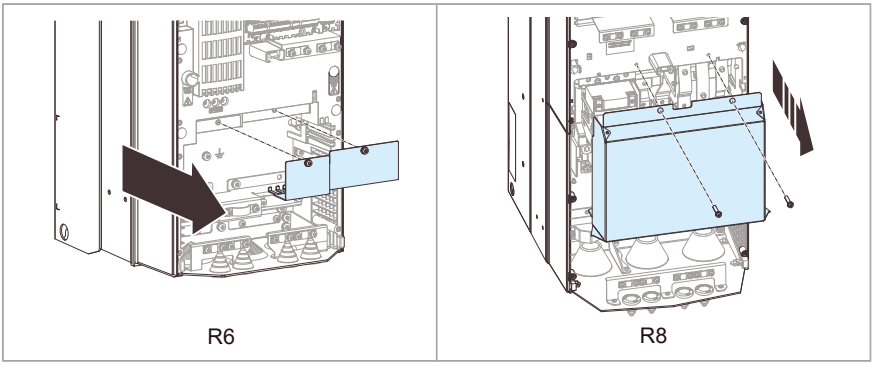

4. For frame R6: If you need more working space, unscrew the screw and lift the EMC plate off. Install the EMC plate again after you have installed the motor and input power cables.
   For frame R8: Remove the EMC cover plates (4a). Remove the EMC side plates (4b).

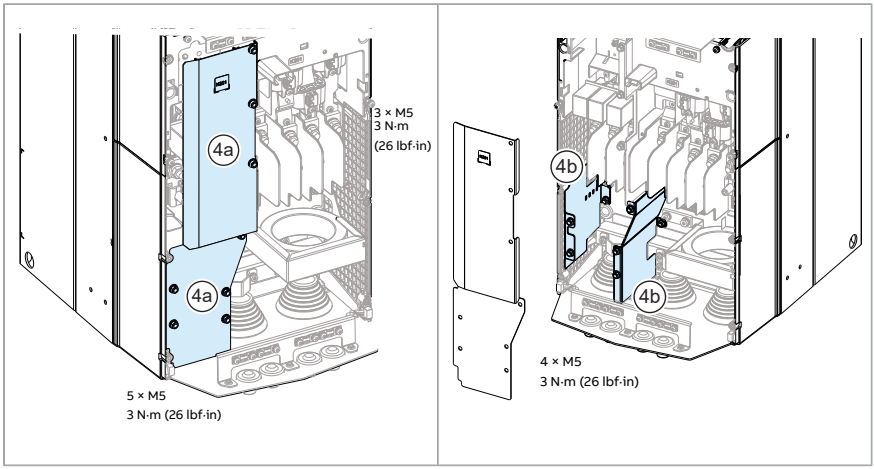

5. For frame R8: For easier installation, you can remove the side plates.

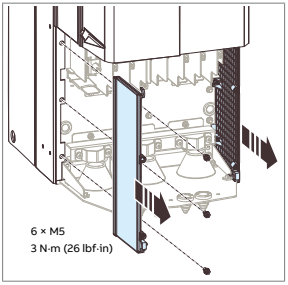

6. Remove the rubber grommets of the cables to be installed from the cable entry plate. Install the grommets downwards in unused holes.

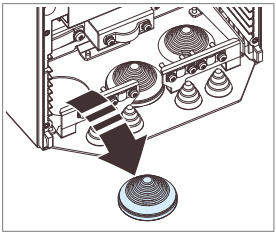

7. If you use metal conduit, attach the cable conduits to the conduit plate. Make sure the conduit is correctly bonded at both ends and that conductivity is consistent throughout the conduit. Slide the cables through the conduit.

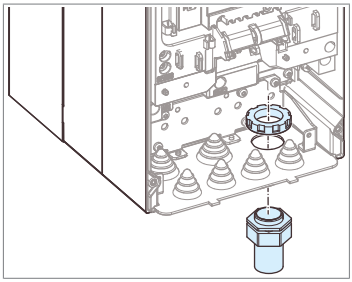

8. Cut the cables to suitable length (note the extra length of the grounding conductors). If you use a symmetrically shielded VFD cable, twist the grounding wires together with the cable shield and connect them to the grounding terminals. Ground the shield 360° at the clamp. If you use discrete conductors connect the insulated ground conductor to the grounding terminal.

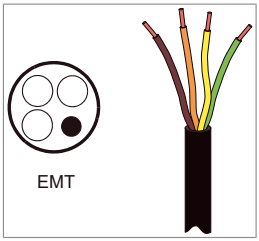

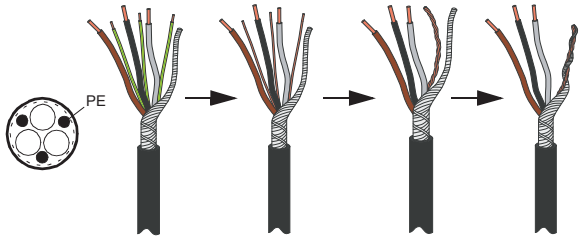

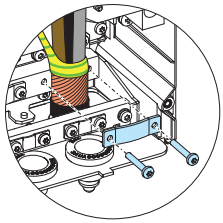

Tightening torque for R3 1.7 N·m (1.25 lbf·ft), for R6 and R8 2 N·m (1.48 lbf·ft)

9. • For frame R8: Install the common mode filter. For instructions, see Common mode filter kit for ACS880-01 frame R7, and for ACS880-11, ACS880-31, ACH580-31 and ACQ580-31 frame R8 installation instructions (3AXD50000015179 [English]).

- Connect the phase conductors of the motor cable to the T1/U, T2/V and T3/W terminals and the phase conductors of the input cable to the L1, L2 and L3 terminals.
- If DC cables are present, use only two phase conductors and the ground conductor. Connect the phase conductors to the UDC+ and UDC- terminals.

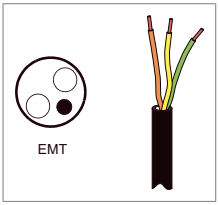

- Tighten the screws to the torque given in the installation drawing below.

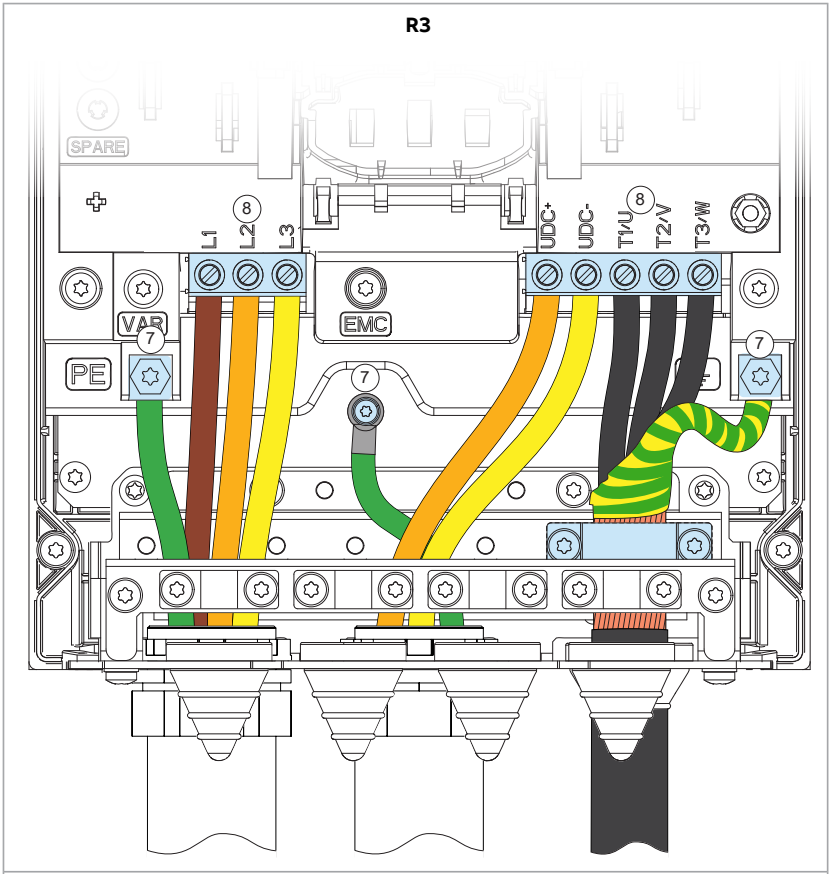

L1, L2, L3, T1/U, T2/V, T3/W, UDC+, UDC-, PE (Ground): 1.7 N·m (1.2 lbf·ft)

R6

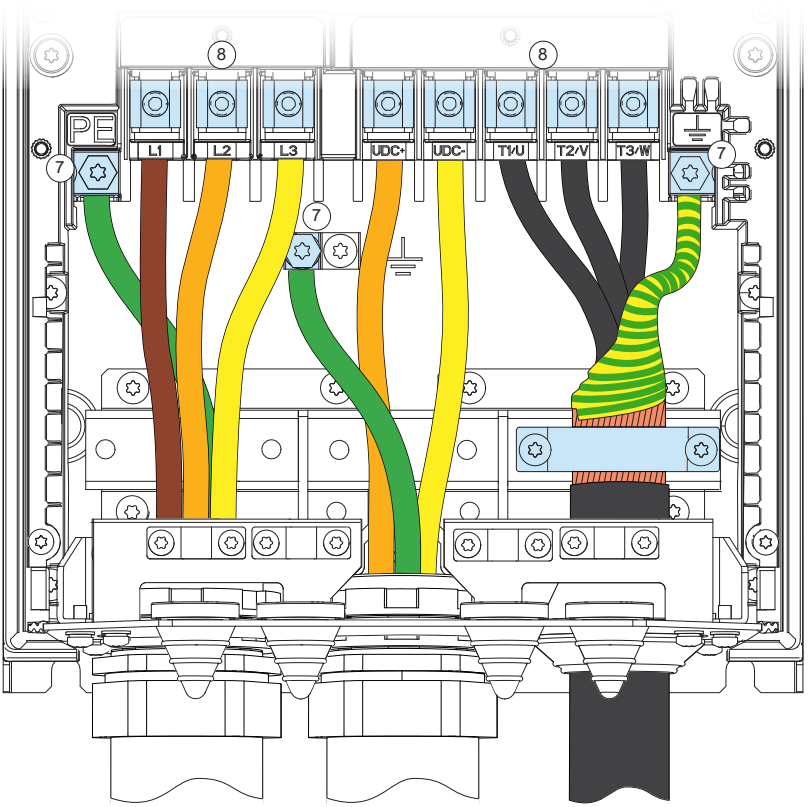

L1, L2, L3, T1/U, T2/V, T3/W, UDC+, UDC-: 15 N·m (11.1 lbf·ft)	**PE (Ground):** 2.9 N·m (2.1 lbf·ft)

R8

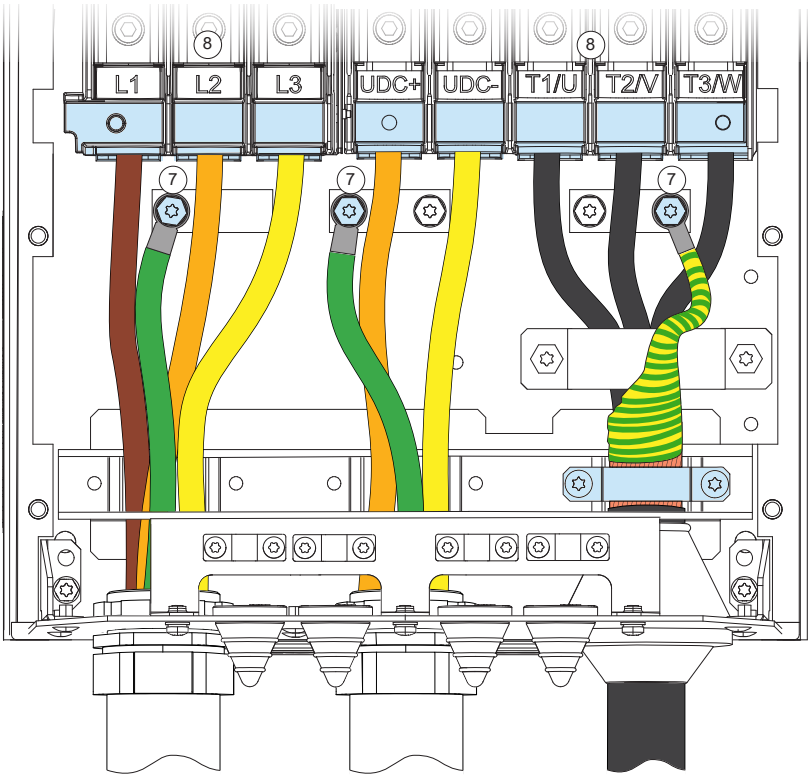

L1, L2, L3, T1/U, T2/V, T3/W, UDC+, UDC-: 30 N·m (22.5 lbf·ft)	**PE (Ground):** 9.8 N·m (7.2 lbf·ft)
Do not detach the power cable connectors.	

For frame R8: Install the side plates if removed.

10. For frame R8: Install the EMC plates in reverse order. See step 4.
11. For frame R6 types bigger than -040A-x: Cut tabs in the shroud for the installed cables.

12. Install the shroud onto the power cable connection terminals.

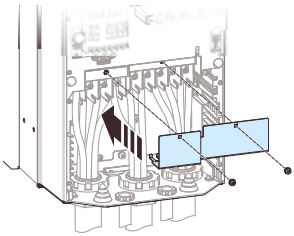

R6

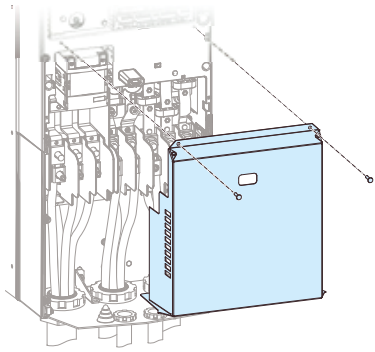

R8

Connecting the control cables

Connection diagram

See section Default I/O connection diagram (page 143).

Connection procedure

WARNING!
Obey the safety instructions of the drive. If you ignore them, injury or death, or damage to the equipment can occur.

1. Stop the drive and do the steps in section Electrical safety precautions (page 20) before you start the work.
2. Remove the front cover(s) if not already removed.
3. For frame R3: Pull the control panel holder up.

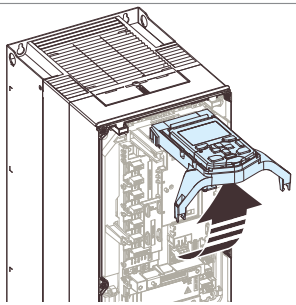

4. Attach the cable conduits to the conduit plate. Make sure the conduit is correctly bonded at both ends and that conductivity is consistent throughout the conduit. Slide the control cables through the conduit. Cut to suitable length (note the extra length of the grounding conductors) and strip the conductors.
5. Ground the outer shields of all control cables 360 degrees at a grounding clamp.
6. Route the cable as shown in the figures below.
7. Secure the cables inside the drive mechanically.
8. Ground the pair-cable shields and grounding wire at the grounding terminal (SCR) of the control unit.

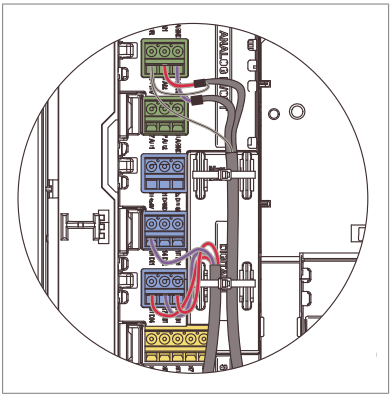

9. Connect the conductors to the appropriate terminals of the control unit and tighten to 0.5 … 0.6 N·m (0.4 lbf·ft). See Default I/O connection diagram (page 143).

Note:

- Leave the other ends of the control cable shields unconnected or ground them indirectly through a high-frequency capacitor with a few nanofarads, eg, 3.3 nF / 630 V. The shield can also be grounded directly at both ends if they are in the same ground line with no significant voltage drop between the end points.
- Keep any signal wire pairs twisted as close to the terminals as possible. Twisting the wire with its return wire reduces disturbances caused by inductive coupling.

R3

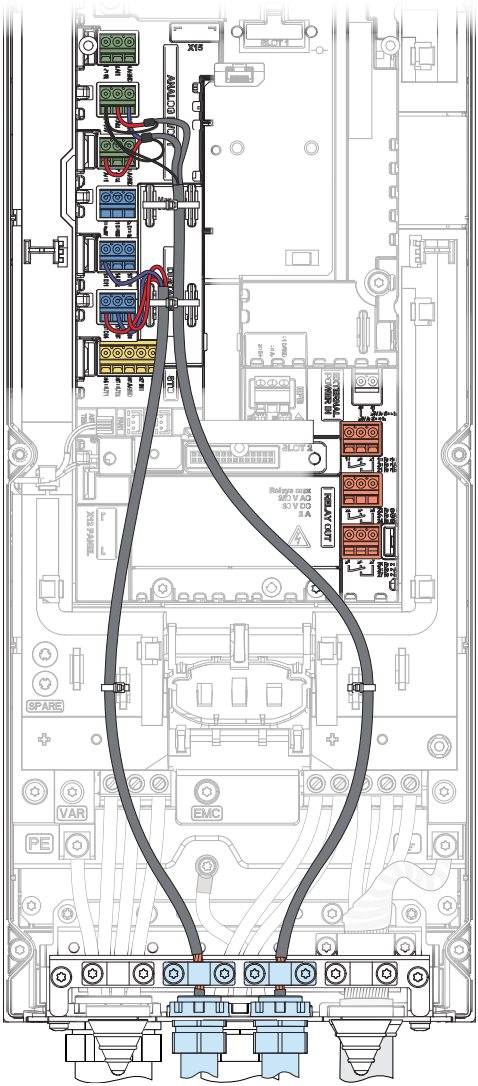
X15
ANALOG
SLOT 1
SLOT 2
SLOT 3
RELAY OUT
X15 PANEL
SPARE
VAR
EMC
PE

R6

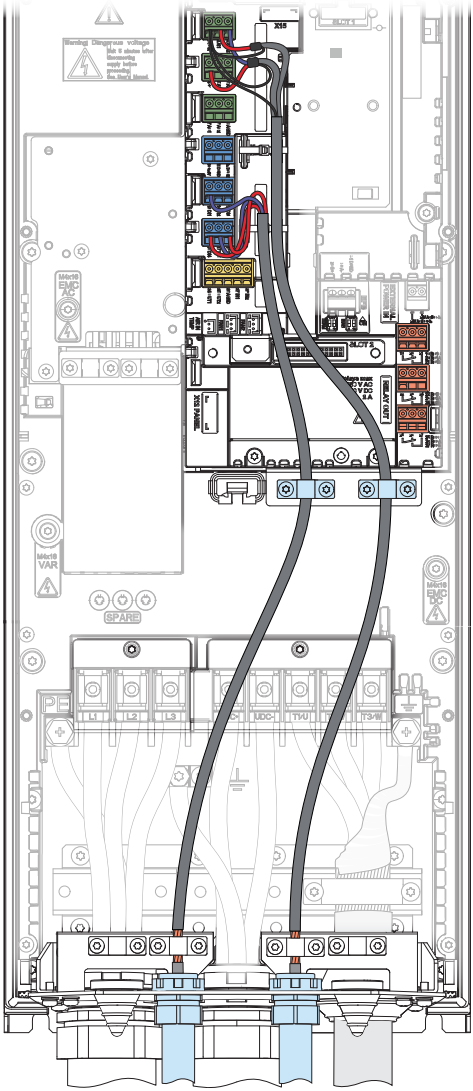
X19
SLOT 5
SLOT 6
M6x16
EMC
AC
M6x16
VAR
M6x16
EMC
DC
SPARE
L1
L2
L3
DC-
UDC+
T1/U
T2/V
T3/W

R8

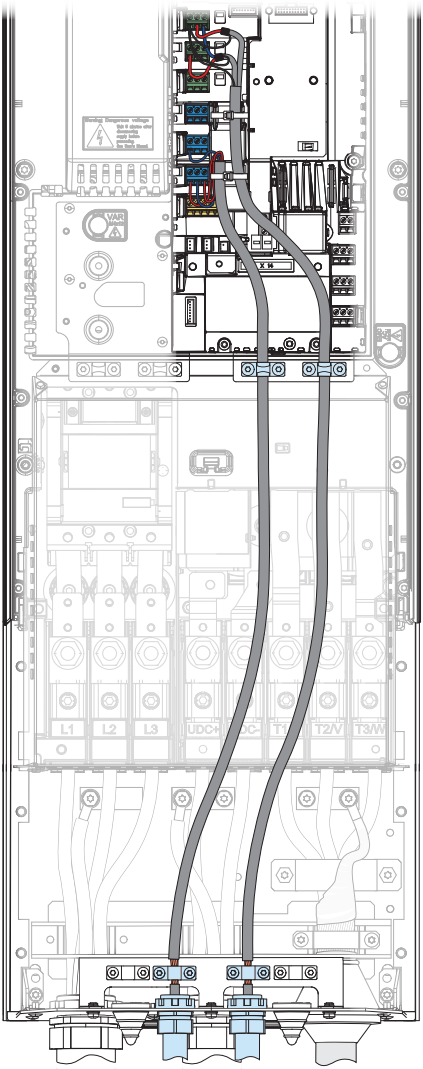

Installing optional modules

See section Installing option modules (page 120).

Reinstalling cover(s)

After installation, reinstall the covers. For UL Type 12 frame R8, connect the second auxiliary cooling fan power supply wire, see section Replacing the auxiliary cooling fan in the IP55 (UL Type 12) cover, frame R8 (page 173).

UL Type 1	UL Type 12
R3 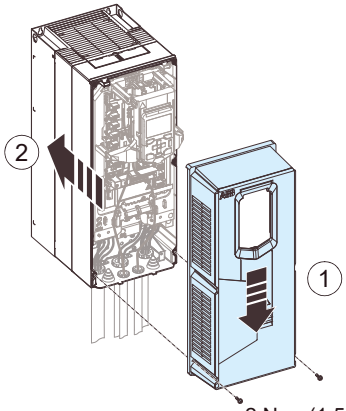 2 N·m (1.5 lbf·ft)	R3 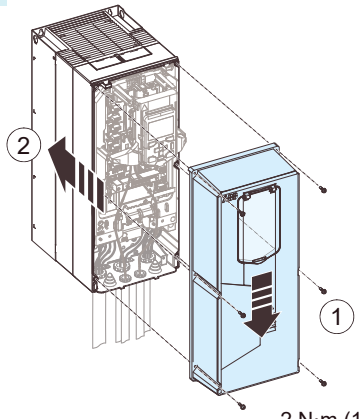 2 N·m (1.5 lbf·ft)

UL Type 1	UL Type 12
R6, R8 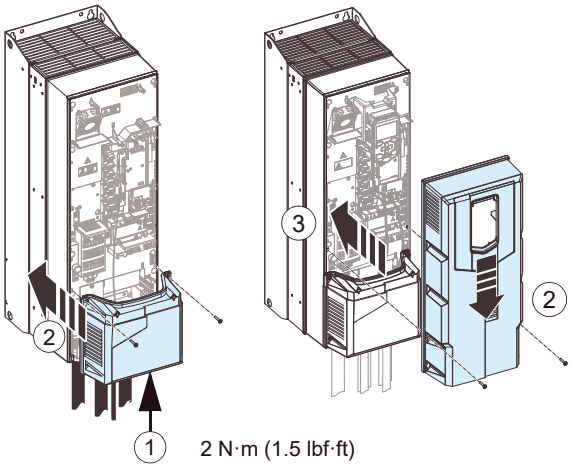 2 N·m (1.5 lbf·ft)	R6, R8 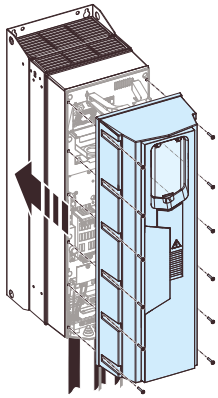 2 N·m (1.5 lbf·ft)

Connecting a PC

See section Connecting a PC (page 123).

Connecting a remote panel, or chaining one panel to several drives

See section Connecting a remote panel, or chaining one panel to several drives (page 123).

8

Control unit

Contents of this chapter

This chapter contains the default I/O connection diagram, descriptions of the terminals and technical data for the drive control unit (CCU-24).

Layout

The layout of the external control connection terminals on the drive module control unit is shown below.

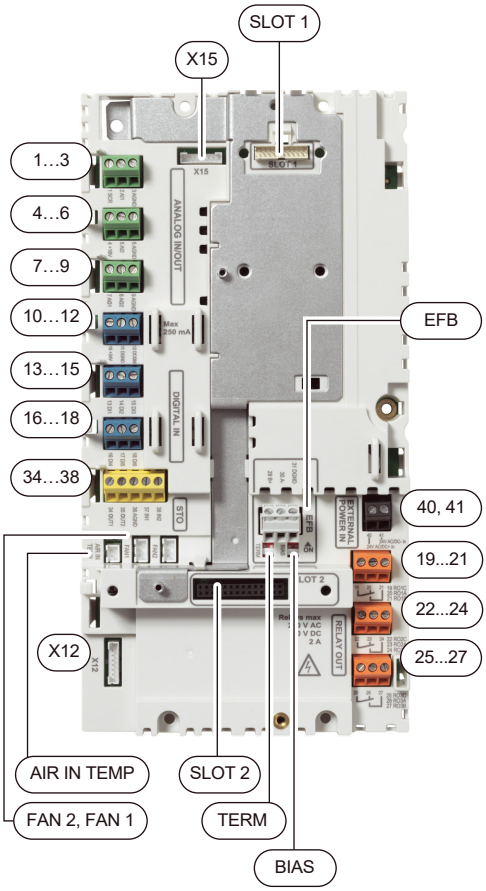

SLOT 1	
Option slot 1 (fieldbus adapter modules)	
ANALOG IN/OUT	
1…3	Analog input 1
4…6	Analog input 2
7…9	Analog outputs
10…12	Auxiliary voltage output, digital input common
DIGITAL IN	
13…18	Digital inputs
STO	
34…38	Safe torque off connection.
AIR IN TEMP	Internal air temperature NTC sensor connection
FAN2	Internal fan 2 connection
FAN1	Internal fan 1 connection
X12	Panel port (control panel connection, wired at the factory to the control panel)
X15	Reserved to internal use.
EFB	
EIA/RS-485 fieldbus connector	
BIAS	Bias resistor switch
TERM	End termination switch
29…31	Connection terminals
SLOT 2	
Option slot 2 (I/O extension modules)	
40, 41	24 V AC/DC external power input
RO1 … RO3	
19…21	Relay output 1 (RO1)
22…24	Relay output 2 (RO2)
25…27	Relay output 3 (RO3)

Default I/O connection diagram

The default control connections for the HVAC default are shown below.

Connection	Term	Description
X1 Reference voltage and analog inputs and outputs		
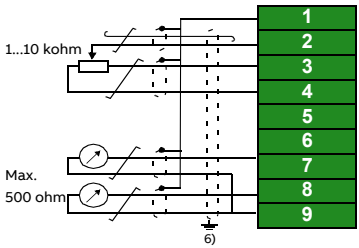		
1	SCR	Signal cable shield (screen)
2	AI1	Output frequency/speed reference: 0…10 V [1]
3	AGND	Analog input circuit common
4	+10V	Reference voltage 10 V DC
5	AI2	Actual feedback: 0…20 mA [1]
6	AGND	Analog input circuit common
7	AO1	Output frequency: 0…10 V
8	AO2	Motor current: 0…20 mA
9	AGND	Analog output circuit common
X2 & X3 Aux. voltage output and programmable digital inputs		
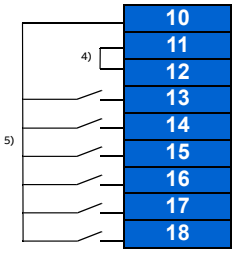		
10	+24V	Aux. voltage output +24 V DC, max. 250 mA [2]
11	DGND	Aux. voltage output common
12	DCOM	Digital input common for all
13	DI1	Stop (0) / Start (1)
14	DI2	Not configured
15	DI3	Constant frequency/speed selection 3)
16	DI4	Start interlock 1 (1 = allow start)
17	DI5	Not configured
18	DI6	Not configured
X6, X7, X8 Relay outputs		

Connection		Term	Description
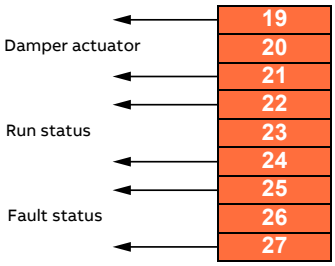	19	RO1C	Damper control 250 V AC / 30 V DC 2 A
	20	RO1A	
	21	RO1B	
	22	RO2C	Running 250 V AC / 30 V DC 2 A
	23	RO2A	
	24	RO2B	
	25	RO3C	Fault (-1) 250 V AC / 30 V DC 2 A
	26	RO3A	
	27	RO3B	
X5 Embedded fieldbus			
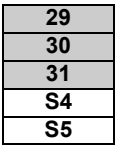	29	B+	Embedded fieldbus, EFB (EIA-485)
	30	A-	
	31	DGND	
	S4	TERM	Termination switch
	S5	BIAS	Bias resistors switch
X4 Safe Torque Off			
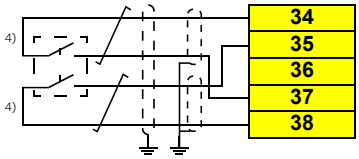	34	OUT1	Safe torque off. Factory connection. Both circuits must be closed for the drive to start. Refer to The Safe torque off function (page 237).
	35	OUT2	
	36	SGND	
	37	IN1	
	38	IN2	
X10 24 V AC/DC			
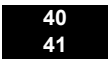	40	24 V AC/DC+ in	External 24 V AC/DC input to power up the control unit when the main supply is disconnected. 7)
	41	24 V AC/DC- in	

Total load capacity of the Auxiliary voltage output +24V (X2:10) is 6.0 W (250 mA / 24 V DC).

Digital inputs DI1…DI5 also support 10…24 V AC.

Terminal sizes (all terminals): 0.14 … 2.5 mm^2 (26…14 AWG)

Tightening torques: 0.5 … 0.6 N·m (4.4 … 5.3 lbf·in)

Wire strip length 7…8 mm (0.3 in)

Notes:

1) Current [0(4)…20 mA, R_{in} = 100 ohm] or voltage [0(2)…10 V, R_{in} >200 kohm]. Change of setting requires changing the corresponding parameter.

2) Total load capacity of the Auxiliary voltage output +24V (X2:10) is 6.0 W (250 mA / 24 V) minus the power taken by the option modules installed on the board.

3) In scalar control: See **Menu** > **Primary settings** > **Start, stop, reference** > **Constant speeds / constant frequencies** or parameter group 28 Frequency reference chain.

   In vector control: See **Menu** > **Primary settings** > **Start, stop, reference** > **Constant speeds / constant frequencies** or parameter group 22 Speed reference selection.

DI3	Operation/Parameter	
	Scalar control (default)	**Vector control**
0	Set frequency through AI1	Set speed through AI1
1	28.26 Constant frequency 1	22.26 Constant speed 1

4) Connected with jumpers at the factory.

5) Use shielded twisted-pair cables for digital signals.

6) Ground the outer shield of the cable 360° under the grounding clamp on the grounding shelf, and the pair-cable shields and grounding wire at the grounding terminal (SCR) of the control unit.

7) **WARNING!** Connect an external AC power supply (24 V AC) only to control unit connectors 40 and 41. If you connect it to connector AGND, DGND or SGND, damage to the power supply or control unit can occur.

Additional information on the control connections

Embedded EIA-485 fieldbus connection

The EIA-485 network uses shielded, twisted-pair cable with a characteristic impedance of 100…130 ohm for data signaling. The distributed capacitance between conductors is less than 100 pF per meter (30 pF per foot). Distributed capacitance between conductors and shield is less than 200 pF per meter (60 pF per foot). Foil or braided shields are acceptable.

Connect the cable to the EIA-485 terminal on the control unit. Obey these wiring instructions:

- Attach the cable shields together at each drive, but do not connect them to the drive.

- Connect the cable shields only to the grounding terminal in the automation controller.
- Connect the signal ground (DGND) conductor to the signal ground reference terminal in the automation controller. If the automation controller does not have a signal ground reference terminal, connect the signal ground conductor to the cable shield through a 100 ohm resistor, preferably near the automation controller.

Connection examples are shown below.

With signal ground reference terminal

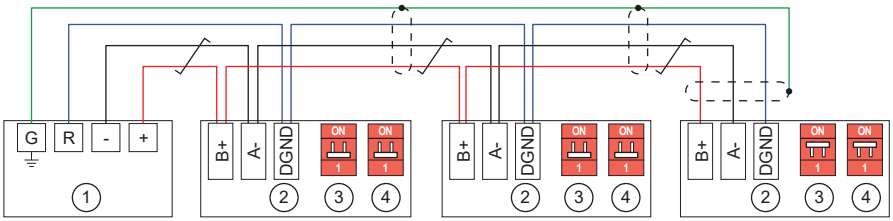

Without signal ground reference terminal

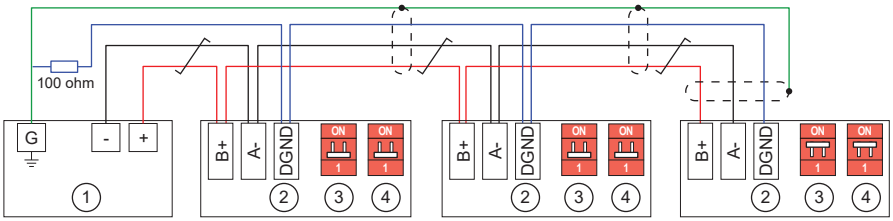

1	Automation controller
2	Drive
3	Termination switch. The devices at the ends of the fieldbus must have termination on. All other devices must have termination off.
4	Biasing switch. One (and only one) device, preferably at the end on the bus must have the bias on.

Connecting motor temperature sensors to the drive

IEC/EN 60664 requires double or reinforced insulation between the control unit and the live parts of the motor. To achieve this, use an CMOD-02 I/O extension module or CPTC-02 ATEX-certified thermistor protection module. Refer to section Implementing a motor temperature sensor connection and chapter CMOD-02

multifunction extension module (external 24 V AC/DC and isolated PTC interface) (page 293).

PNP configuration for digital inputs (X2 & X3)

Internal and external +24 V power supply connections for PNP configuration are shown in the figure below.

Internal +24 V power supply

PNP connection (source)

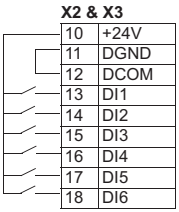

External +24 V power supply

PNP connection (source)

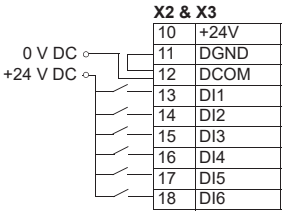

WARNING!
Do not connect the +24 V AC cable to the control unit ground when the control unit is powered from an external 24 V AC supply.

NPN configuration for digital inputs (X2 & X3)

Internal and external +24 V power supply connections for NPN configuration are shown in the figure below.

Internal +24 V power supply

NPN connection (sink)

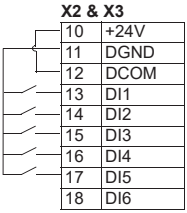

External +24 V power supply

NPN connection (sink)

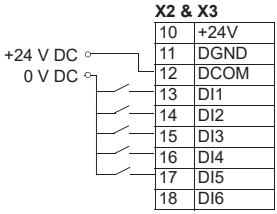

Note: DI6 is not supported in the NPN configuration.

WARNING!
Do not connect the +24 V AC cable to the control unit ground when the control unit is powered from an external 24 V AC supply.

Connection for obtaining 0…10 V from analog output 2 (AO2)

To obtain 0…10 V from analog output AO2, connect a 500 ohm resistor (or two 1 kohm resistors in parallel) between analog output AO2 and analog common ground AGND.

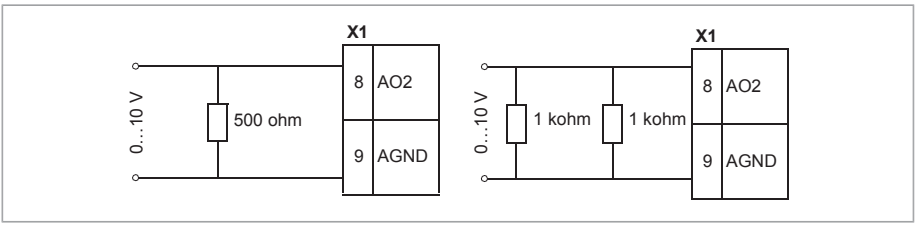

Connection examples of two-wire and three-wire sensors to analog input (AI2)

Note: The maximum capability of the auxiliary voltage output (24 V DC [250 mA]) must not be exceeded.

An example of a two-wire sensor/transmitter supplied by the drive auxiliary voltage output is shown below. Set the input signal to 4…20 mA, not 0…20 mA.

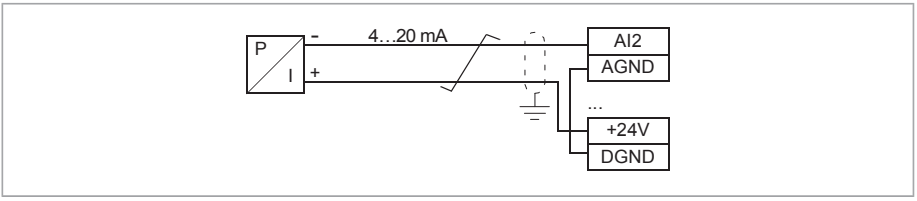

An example of a three-wire sensor/transmitter supplied by the drive auxiliary voltage output is shown below.The sensor is supplied through its current output and the drive feeds the supply voltage (+24 V DC). Thus the output signal must be 4…20 mA, not 0…20 mA.

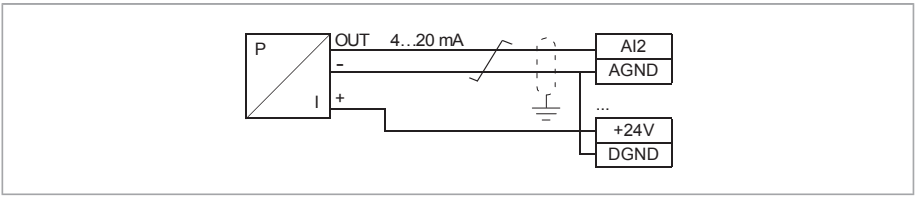

DI5 as frequency input

For setting the parameters for the digital frequency input, see the firmware manual.

Safe torque off (X4)

For the drive to start, both connections (+24 V DC to IN1 and +24 V DC to IN2) must be closed. By default, the terminal block has jumpers to close the circuit.

Remove the jumpers before connecting an external Safe torque off circuitry to the drive. See also chapter The Safe torque off function (page 237).

Note: Only 24 V DC can be used for STO. Only PNP input configuration can be used.

Technical data

External power supply Term. 40, 41	Maximum power: 36 W, 1.50 A at 24 V AC/DC ±10% as standard Terminal size: 0.14 … 2.5 mm^2 (26 … 14 AWG)
+24 V DC output (Term. 10)	Total load capacity of this outputs is 6.0 W (250 mA / 24 V) minus the power taken by the option modules installed on board. Terminal size: 0.14 … 2.5 mm^2 (26 … 14 AWG)
Digital inputs DI1…DI6 (Term. 13…18)	Input type: NPN/PNP Terminal size: 0.14 … 2.5 mm^2 (26 … 14 AWG) DI1…DI4 (Term. 13…16) 12/24 V DC logic levels: "0" < 4 V, "1" > 8 V R_{in}: 3 kohm Hardware filtering: 0.04 ms, digital filtering: 2 ms sampling DI5 (Term.17) Can be used as a digital or frequency input. 12/24 V DC logic levels: "0" < 4 V, "1" > 8 V R_{in}: 3 kohm Max. frequency: 16 kHz Symmetrical signal (duty cycle D = 0.50) DI6 (Term.18) Can be used as a digital or PTC input. 12/24 V DC logic levels: "0" < 3 V, "1" > 8 V R_{in}: 3 kohm Max. frequency: 16 kHz Symmetrical signal (duty cycle D = 0.50) Hardware filtering: 0.04 ms, digital filtering: 2 ms sampling **Note:** DI6 is not supported in the NPN configuration. PTC mode – PTC thermistor can be connected between DI6 and +24 V DC: < 1.5 kohm = ‘1’ (low temperature), > 4 kohm = ‘0’ (high temperature), open circuit = ‘0’ (high temperature). DI6 is not a reinforced/double insulated input. Connecting the motor PTC sensor to this input requires usage of a reinforced/double insulated PTC sensor inside the motor
Relay outputs RO1…RO3 (Term. 19…27)	250 V AC / 30 V DC, 2 A. Terminal size: 0.14 … 2.5 mm^2 (26 … 14 AWG) See section Isolation areas (page 152).

Analog inputs AI1 and AI2 (Term. 2 and 5)	Current/voltage input mode selected with a parameter, see Connecting motor temperature sensors to the drive (page 146). Current input: 0(4)…20 mA, R_{in}: 100 ohm Voltage input: 0(2)…10 V, R_{in}: > 200 kohm Terminal size: 0.14 … 2.5 mm^2 (26 … 14 AWG) Inaccuracy: typical ±1%, max. ±1.5% of full scale Inaccuracy for Pt100 sensors: 10 °C (50 °F)
Analog outputs AO1 and AO2 (Term. 7 and 8)	Current/voltage output mode for AO1 selected with a parameter, see Connection for obtaining 0…10 V from analog output 2 (AO2) (page 148). Current output: 0…20 mA, R_{load}: < 500 ohm Voltage input: 0…10 V, R_{load}: > 100 kohm (AO1 only) Terminal size: 0.14 … 2.5 mm^2 (26 … 14 AWG) Inaccuracy: ±1% of full scale (in voltage and current modes)
Reference voltage output for analog inputs +10V DC (Term. 4)	Max. 20 mA output Inaccuracy: ±1%
Safe torque off (STO) inputs IN1 and IN2 (Term. 37 and 38)	24 V DC logic levels: "0" < 5 V, "1" > 13 V R_{in}: 2.47 kohm Terminal size: 0.14 … 2.5 mm^2 (26 … 14 AWG)
Embedded fieldbus (X5)	Connector pitch 5 mm, maximum wire size 2.5 mm^2 (14 AWG) Physical layer: EIA-485 Cable type: Shielded twisted pair cable with twisted pair for data and a wire or pair for signal ground, nominal impedance 100…165 ohms, for example Belden 9842 Transmission rate: 9.6 … 115.2 kbit/s Termination by switch
Control panel - drive connection	EIA-485, male RJ-45 connector, max. cable length 100 m (328 ft)
Control panel - PC connection	USB Type Mini-B, max. cable length 2 m (6.5 ft)

Isolation areas

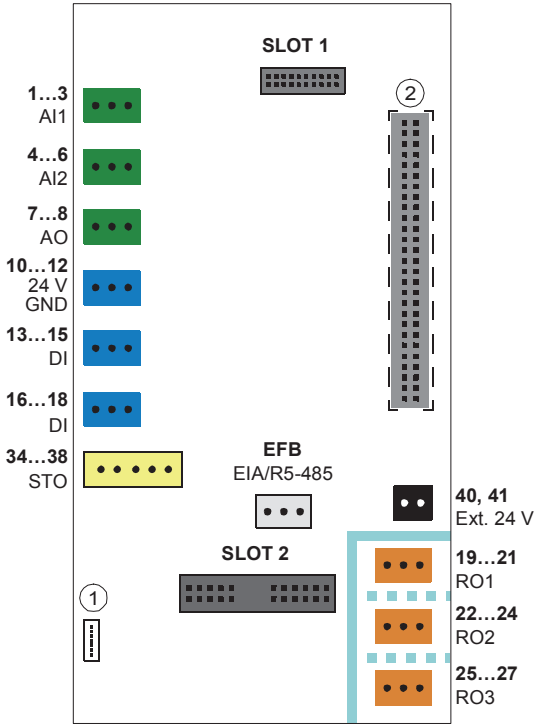

1	Panel port
2	Power unit connection at the bottom of the control unit
	Reinforced insulation (IEC/EN 61800-5-1:2007, UL 61800-5-1 First edition)
	Functional insulation (IEC/EN 61800-5-1:2007, UL 61800-5-1 First edition)

The terminals on the control unit fulfill the Protective Extra Low Voltage (PELV) requirements (EN 50178): There is reinforced insulation between the user terminals which only accept ELV voltages and terminals that accept higher voltages (relay outputs).

Note: There is functional insulation also between the individual relay outputs.

Note: There is reinforced insulation on the power unit.

Ground isolation diagram

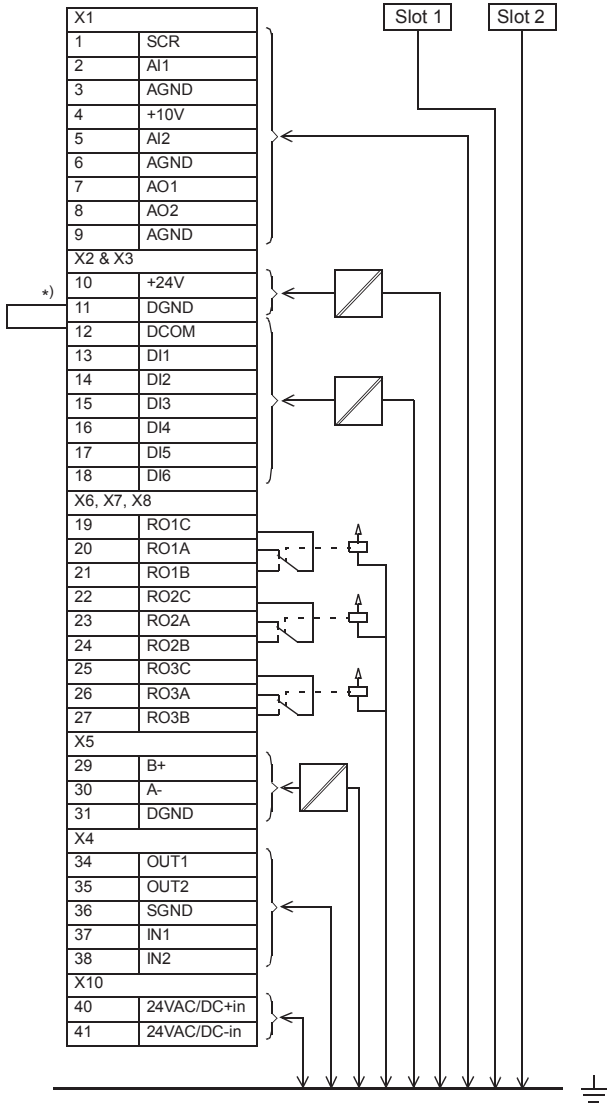

*) Jumper installed at factory

9

Installation checklist

Contents of this chapter

This chapter contains a checklist for the mechanical and electrical installation of the drive.

Checklist

Examine the mechanical and electrical installation of the drive before start-up. Go through the checklist together with another person.

WARNING!
Obey the safety instructions of the drive. If you ignore them, injury or death, or damage to the equipment can occur. If you are not a qualified electrical professional, do not do installation, commissioning or maintenance work.

WARNING!
Stop the drive and do the steps in section Electrical safety precautions (page 20) before you start the work.

Make sure that ...	☑
The ambient operating conditions meet the drive ambient conditions specification and enclosure rating (IP code).	☐
The supply voltage matches the nominal input voltage of the drive. See the type designation label.	☐

Make sure that ...	☑
The insulation resistance of the input power cable, motor cable and motor is measured according to local regulations and the manuals of the drive.	☐
The drive is attached securely on an even, vertical and non-flammable wall.	☐
The cooling air can flow freely in and out of the drive.	☐
If the drive is connected to a network other than a symmetrically grounded TN-S system: You have done all the required modifications (for example, you may need to disconnect the EMC filter or ground-to-phase varistor). See the electrical installation instructions.	☐
Appropriate AC fuses and main disconnecting device are installed.	☐
There is an adequately sized protective earth (ground) conductor(s) between the drive and the switchboard, the conductor is connected to correct terminal, and the terminal is tightened to the correct torque. Grounding has also been measured according to the regulations.	☐
The input power cable is connected to the correct terminals, the phase order is correct, and the terminals are tightened to the correct torque.	☐
There is an adequately sized protective earth (ground) conductor between the motor and the drive. The conductor is connected to the correct terminal, and the terminal is tightened to the correct torque. Grounding has also been measured according to the regulations.	☐
The motor cable is connected to the correct terminals, the phase order is correct, and the terminals are tightened to the correct torque.	☐
The motor cable is routed away from other cables.	☐
No power factor compensation capacitors are connected to the motor cable.	☐
If an external brake resistor is connected to the drive: There is an adequately sized protective earth (ground) conductor between the brake resistor and the drive, and the conductor is connected to the correct terminal, and the terminals are tightened to the correct torque. Grounding has also been measured according to the regulations.	☐
If an external brake resistor is connected to the drive: The brake resistor cable is connected to the correct terminals, and the terminals are tightened to the correct torque.	☐
If an external brake resistor is connected to the drive: The brake resistor cable is routed away from other cables.	☐

Make sure that ...	☑
The control cables are connected to the correct terminals, and the terminals are tightened to the correct torque.	☐
If a drive bypass connection will be used: The direct-on-line contactor of the motor and the drive output contactor are either mechanically and/or electrically interlocked, that is, they cannot be closed at the same time. A thermal overload device must be used for protection when bypassing the drive. Refer to local codes and regulations.	☐
There are no tools, foreign objects or dust from drilling inside the drive.	☐
The area in front of the drive is clean: the drive cooling fan cannot draw any dust or dirt inside.	☐
Drive covers and the terminal box cover of the motor are in place.	☐
The motor and the driven equipment are ready for power-up.	☐

10

Start-up

Contents of this chapter

This chapter describes the start-up procedure of the drive.

Reforming the capacitors

The capacitors must be reformed if the drive has not been powered (either in storage or unused) for a year or more. The manufacturing date is on the type designation label. For information on reforming the capacitors, refer to Capacitor reforming instructions (3BFE64059629 [English]).

Start-up procedure

1. Run setup of the drive control program according to the start-up instructions given in ACH580-31 drives quick installation and start-up guide (3AXD50000803040 [English]) or in the firmware manual.
   - For drives with resistor braking: See also chapter Resistor braking (page 259).
   - For SynRM motor drives: Set bit 2 of parameter 95.21 HW options word 2 to SynRM.
2. Validate the Safe torque off function according to the instructions given in chapter The Safe torque off function (page 237).

11

Maintenance

Contents of this chapter

This chapter contains maintenance instructions.

Maintenance intervals

The tables below show the maintenance tasks which can be done by the end user. For ABB Service offering, refer to www.abb.com/drivesservices or consult your local ABB Service representative (www.abb.com/searchchannels).

Description of symbols

Action	Description
I	Inspection (visual inspection and maintenance action if needed)
P	Performance of on/off-site work (commissioning, tests, measurements or other work)
R	Replacement

Recommended maintenance intervals after start-up

Recommended annual actions by the user	
Action	**Description**
P	Quality of supply voltage
I	Spare parts

Recommended annual actions by the user	
Action	**Description**
P	Capacitor reforming for spare modules and spare capacitors
I	Tightness of terminals
I	Dustiness, corrosion or temperature
P	Heatsink cleaning

Recommended maintenance actions by the user							
Component	**Years from start-up**						
	3	**6**	**9**	**12**	**15**	**18**	**21**
Cooling							
Main cooling fan							
Main cooling fans			R			R	
Auxiliary cooling fan							
Auxiliary cooling fan			R			R	
Second auxiliary cooling fan (IP55, UL Type 12)			R			R	
Aging							
Control panel battery (real-time clock)			R			R	
Functional safety							
Safety function test	I See the maintenance information of the safety function						
Safety component expiry (Mission time, T_M)	20 years						
							4FPS10000309652

Note:

- Maintenance and component replacement intervals are based on the assumption that the equipment is operated within the specified ratings and ambient conditions. ABB recommends annual drive inspections to ensure the highest reliability and optimum performance.
- Long term operation near the specified maximum ratings or ambient conditions may require shorter maintenance intervals for certain components. Consult your local ABB Service representative for additional maintenance recommendations.

Cleaning the exterior of the drive

WARNING!
Obey the safety instructions of the drive. If you ignore them, injury or death, or damage to the equipment can occur. If you are not a qualified electrical professional, do not do installation, commissioning or maintenance work.

1. Stop the drive and do the steps in section Electrical safety precautions (page 20) before you start the work.
2. Clean the exterior of the drive. Use:
   - vacuum cleaner with an antistatic hose and nozzle
   - soft brush
   - dry or damp (not wet) cleaning cloth. Moisten with clean water, or mild detergent (pH 5…9 for metal, pH 5…7 for plastic).

WARNING!
Prevent water from entering the drive. Never use excessive amount of water, a hose, steam, etc.

Cleaning the heatsink

The drive module heatsink fins pick up dust from the cooling air. The drive runs into overtemperature warnings and faults if the heatsink is not clean. When necessary, clean the heatsink as follows.

WARNING!
Use the required personal protective equipment. Wear protective gloves and long sleeves. Some parts have sharp edges.

WARNING!
Use a vacuum cleaner with antistatic hose and nozzle, and wear a grounding wristband. Using a normal vacuum cleaner creates static discharges which can damage circuit boards.

1. Stop the drive and do the steps in section Electrical safety precautions (page 20) before you start the work.
2. Remove the module cooling fan(s). See the separate instructions.
3. Blow dry, clean and oil-free compressed air from bottom to top and simultaneously use a vacuum cleaner at the air outlet to trap the dust. If there is a risk of dust entering adjoining equipment, do the cleaning in another room.
4. Reinstall the cooling fan.

Fans

Parameter 05.04 Fan on-time counter indicates the running time of the cooling fan. Reset the counter after a fan replacement. See the firmware manual.

In a speed-controlled fan, the speed of the fan matches the cooling needs. This increases the life span of the fan.

Main fans are speed controlled. When the drive is stopped, the main fan is kept running at low speed to cool the control unit. The auxiliary fans are not speed controlled and run when the control unit is powered.

Replacement fans are available from ABB. Do not use other than specified spare parts.

Replacing the main cooling fan, frame R3

WARNING!
Obey the safety instructions of the drive. If you ignore them, injury or death, or damage to the equipment can occur.

1. Stop the drive and do the steps in section Electrical safety precautions (page 20) before you start the work.
2. To release the locking, turn clockwise with a screwdriver.
3. Turn the fan assembly off.
4. Install the new fan in reverse order.

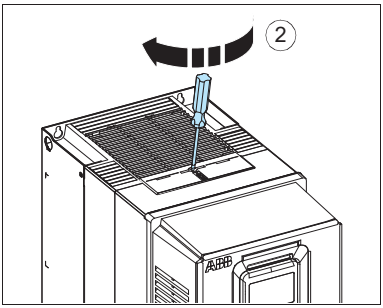

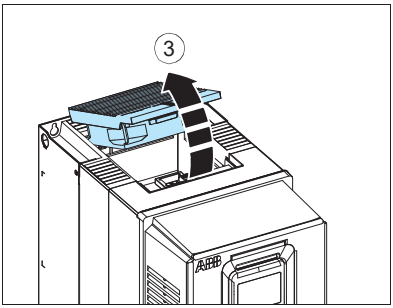

Replacing the main cooling fan, frame R6

WARNING!
Obey the safety instructions of the drive. If you ignore them, injury or death, or damage to the equipment can occur.

1. Stop the drive and do the steps in section Electrical safety precautions (page 20) before you start the work.
2. Lever the fan assembly off the drive frame with for example a screwdriver and pull out the fan assembly.
3. Pull the fan assembly down.
4. Disconnect the fan power supply wire from the drive.
5. Install the new fan in reverse order.

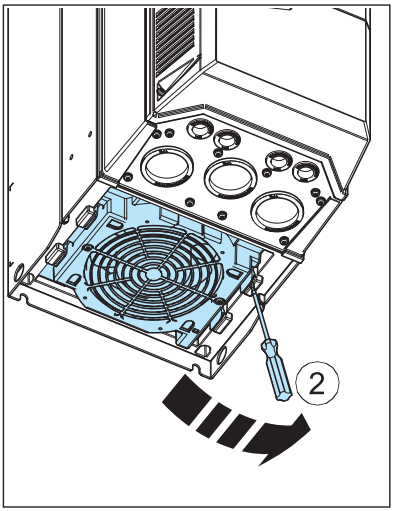

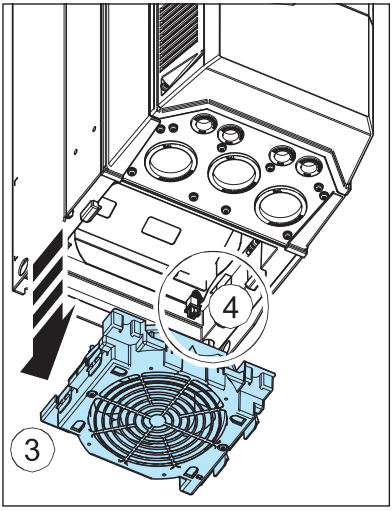

Replacing the main cooling fan, frame R8

WARNING!
Obey the safety instructions of the drive. If you ignore them, injury or death, or damage to the equipment can occur.

1. Stop the drive and do the steps in section Electrical safety precautions (page 20) before you start the work.
2. Undo the mounting screws of the fan assembly.
3. Unplug the fan power supply and grounding wires from the drive.
4. Pull the fan assembly down.
5. Undo the mounting screws of the fan.
6. Install the new fan in reverse order.

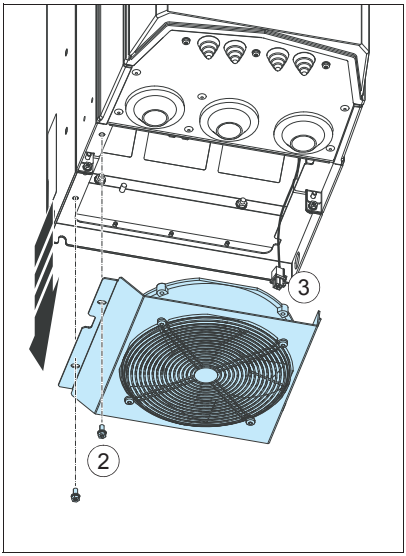

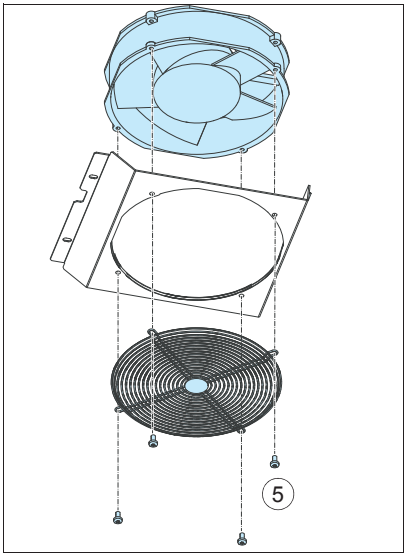

Replacing the auxiliary cooling fan of frame R3, IP55 (UL Type 12) and +C135 IP21 (UL Type 1)

WARNING!
Obey the safety instructions of the drive. If you ignore them, injury or death, or damage to the equipment can occur.

1. Stop the drive and do the steps in section Electrical safety precautions (page 20) before you start the work.
2. Remove the front cover (see Connection procedure (page 106)).
3. Release the retaining clips.
4. Lift the fan off.
5. Unplug fan power supply wires.
6. Install the new fan in reverse order.

   Note: Make sure that the arrow on the fan points down.

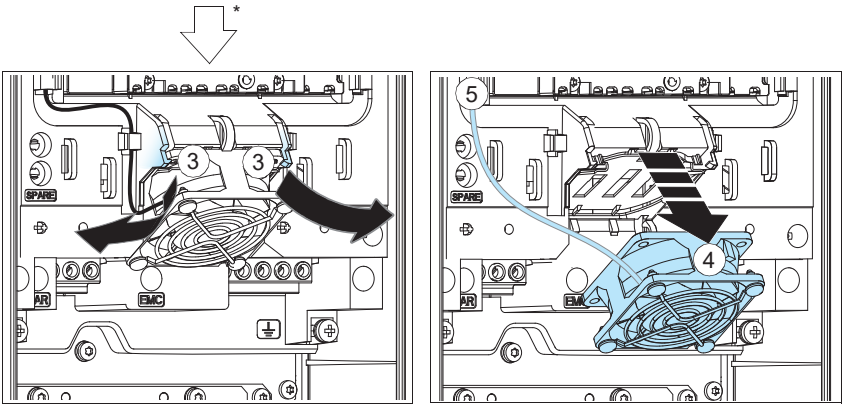

*Blowing direction down

Replacing the auxiliary cooling fan, frame R6

WARNING!
Obey the safety instructions of the drive. If you ignore them, injury or death, or damage to the equipment can occur.

1. Stop the drive and do the steps in section Electrical safety precautions (page 20) before you start the work.
2. Remove the upper front covers. See section Connection procedure (page 106).
3. Release the retaining clips.
4. Lift the fan off.
5. Unplug fan power supply wires.
6. Remove the grille from the fan.
7. Install the new fan in reverse order.

   Note: Make sure that the arrow on the fan points up.
8. Reinstall the front covers. See section Reinstalling cover(s) (page 122).

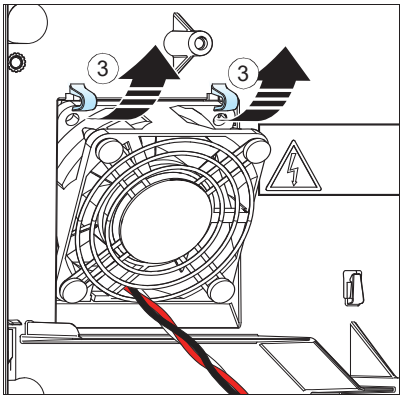

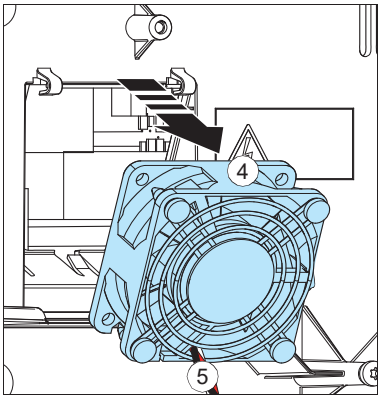

Replacing the second auxiliary cooling fan, IP55 (UL Type 12) frame R6

Another auxiliary cooling fan (FAN2) at right-hand side of the control panel is included in IP55 (UL Type 12) frame R6 types -062A-4 and -052A-4 and bigger. For the replacement process, see Replacing the auxiliary cooling fan, frame R6 (page 169).

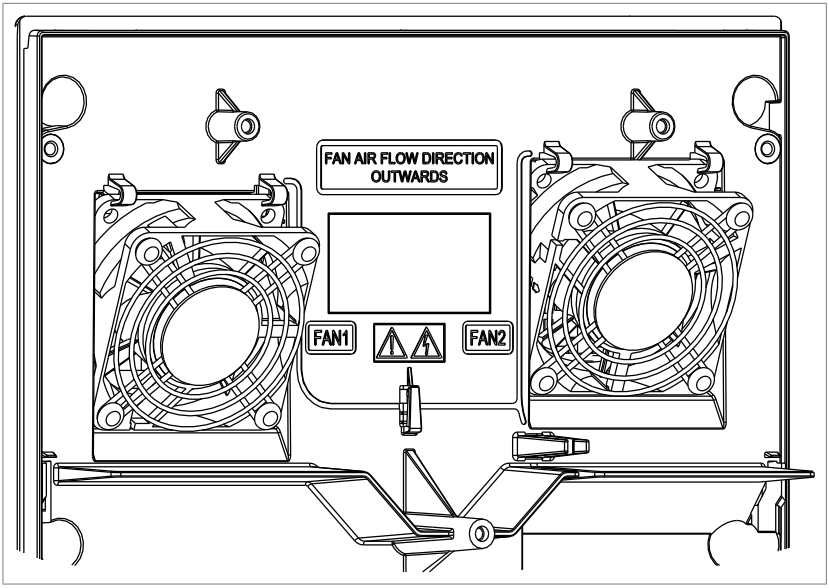

Replacing the auxiliary cooling fan, frame R8

WARNING!
Obey the safety instructions of the drive. If you ignore them, injury or death, or damage to the equipment can occur.

1. Stop the drive and do the steps in section Electrical safety precautions (page 20) before you start the work.
2. Remove the upper front covers. See section Connection procedure (page 106).
3. Release the retaining clips.
4. Lift the fan off.
5. Unplug fan power supply wires.
6. Remove the grille.
7. Install the new fan in reverse order.

   Note: Make sure that the arrow on the fan points up.
8. Replace the front covers.

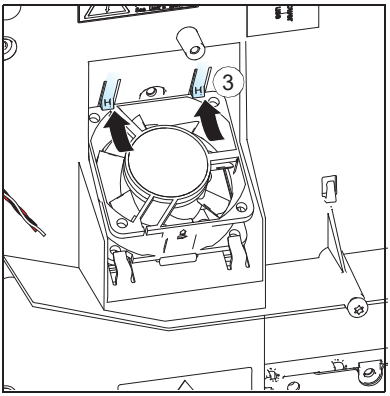

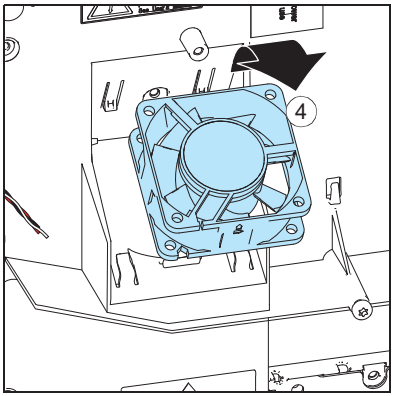

Replacing the second internal auxiliary cooling fan, IP55 (UL Type 12) frame R8

WARNING!
Obey the safety instructions of the drive. If you ignore them, injury or death, or damage to the equipment can occur.

1. Stop the drive and do the steps in section Electrical safety precautions (page 20) before you start the work.
2. Remove the IP55 front cover, disconnect the power supply wire of the auxiliary cooling fan in the cover (see section Replacing the auxiliary cooling fan the IP55 (UL Type 12) cover, frame R8).
3. Release the retaining clips.
4. Lift the fan off.
5. Unplug the power supply wire from the branching plug.
6. Install the new fan in reverse order. Make sure that the arrow on the fan points out.
7. Replace the front cover.

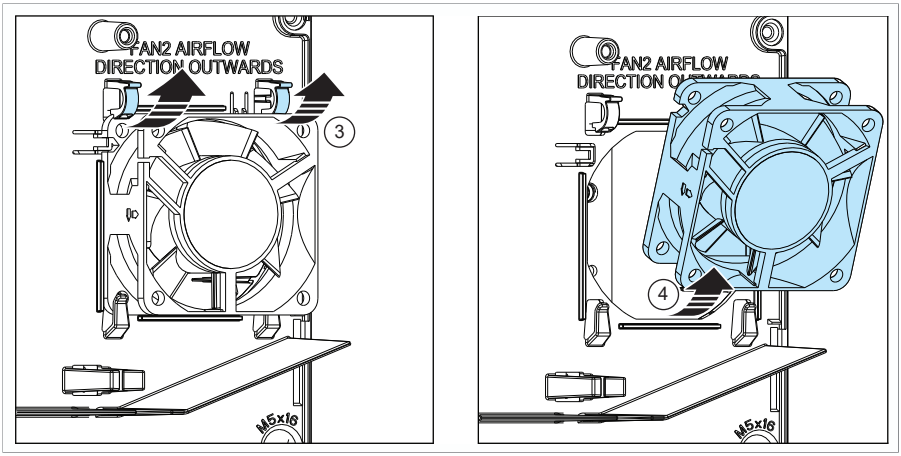

Replacing the auxiliary cooling fan in the IP55 (UL Type 12) cover, frame R8

WARNING!
Obey the safety instructions of the drive. If you ignore them, injury or death, or damage to the equipment can occur.

1. Stop the drive and do the steps in section Electrical safety precautions (page 20) before you start the work.
2. Remove the IP55 front cover. Unplug the auxiliary cooling fan power supply wire.
3. Remove the lower front cover from the IP55 cover.
4. Pull the fan supply wire through the grommet.
5. Remove the fan.
6. Install the new fan in reverse order. Make sure that the arrow on the fan points up.

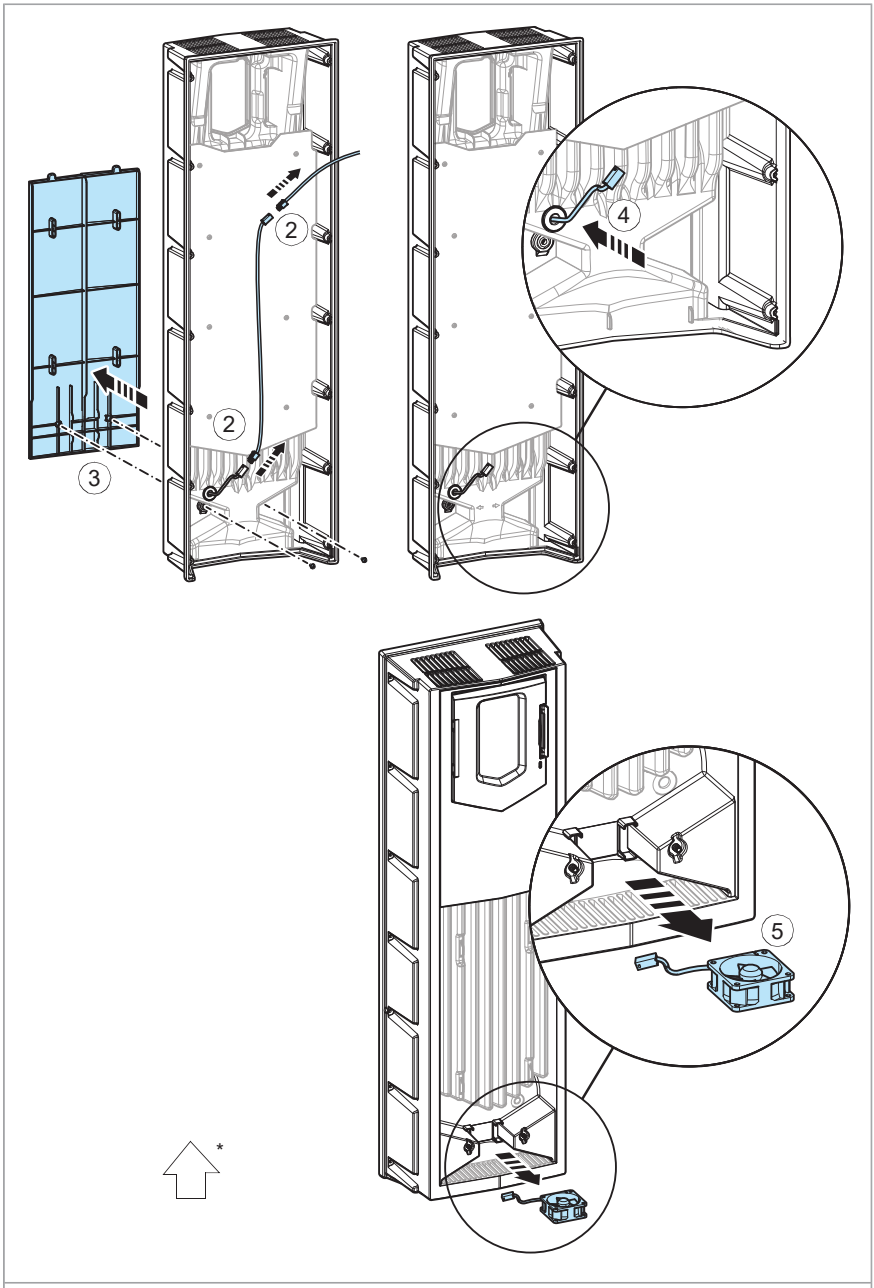

*Fan arrow must point up

Capacitors

The intermediate DC circuit of the drive contains several electrolytic capacitors. Operating time, load, and surrounding air temperature have an effect on the life of the capacitors. Capacitor life can be extended by decreasing the surrounding air temperature.

Capacitor failure is usually followed by damage to the unit and an input cable fuse failure, or a fault trip. If you think that any capacitors in the drive have failed, contact ABB.

Reforming the capacitors

The capacitors must be reformed if the drive has not been powered (either in storage or unused) for a year or more. The manufacturing date is on the type designation label. For information on reforming the capacitors, refer to Capacitor reforming instructions (3BFE64059629 [English]).

Control panel

See ACS-AP-I, -S, -W and ACH-AP-H, -W Assistant control panels user's manual (3AUA0000085685 [English]).

For removing the control panel from the drive, see Control panel (page 37).

Drive LEDs

There is a green POWER and a red FAULT LED visible when the control panel is removed. If a control panel is attached to the drive, switch to remote control otherwise a fault will be generated, and then remove the panel to be able to see the LEDs. See the firmware manual on how to switch to remote control.

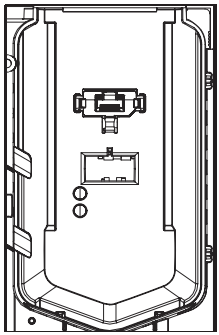

The table below describes the drive LED indications.

LEDs off	LED lit and steady		LED blinking	
No power	Green (POWER)	Power supply on the unit OK	Green (POWER)	Blinking: Drive in an alarm state Blinking for one second: Drive selected on the control panel when multiple drives are connected to the same panel bus.
	Red (FAULT)	Active fault in the drive. To reset the fault, press RESET from the control panel or switch off the drive power.	Red (FAULT)	Active fault in the drive. To reset the fault, switch off the drive power.

Functional safety components

The mission time of functional safety components is 20 years which equals the time during which failure rates of electronic components remain constant. This applies to the components of the standard Safe torque off circuit as well as any modules, relays and, typically, any other components that are part of functional safety circuits.

The expiry of mission time terminates the certification and SIL/PL classification of the safety function. The following options exist:

- Renewal of the whole drive and all optional functional safety module(s) and components.
- Renewal of the components in the safety function circuit. In practice, this is economical only with larger drives that have replaceable circuit boards and other components such as relays.

Note that some of the components may already have been renewed earlier, restarting their mission time. The remaining mission time of the whole circuit is however determined by its oldest component.

Contact your local ABB service representative for more information.

12

Technical data

Contents of this chapter

This chapter contains the technical specifications of the drive including the ratings, sizes and technical requirements, provisions for fulfilling the requirements for CE, UL and other approval marks.

Electrical ratings

IEC ratings

ACH580-31-...	Frame size	Input rating[1)]	Max. current	App. power	Output ratings					
					Nominal use		Light-duty use		Heavy-duty use	
		I_1	I_{max}	S_n	I_2	P_n	I_{Ld}	P_{Ld}	I_{Hd}	P_{Hd}
		A	A	kVA	A	kW	A	kW	A	kW
3-phase U_n = 400 V										
09A5-4	R3	8.0	12.2	6.5	9.4	4.0	8.9	4.0	7.2	3.0
12A7-4	R3	10.0	16.1	8.7	12.6	5.5	12.0	5.5	9.4	4.0
018A-4	R3	14.0	21.4	11.8	17.0	7.5	16.2	7.5	12.6	5.5
026A-4	R3	20.0	28.8	17.3	25.0	11	23.8	11	17.0	7.5
033A-4	R6	27	42.5	22.2	32.0	15	30.4	15	25	11
039A-4	R6	33	54.4	26.3	38.0	18.5	36.1	18.5	32	15

ACH580-31-...	Frame size	Input rating[1)]	Max. current	App. power	Output ratings					
					Nominal use		Light-duty use		Heavy-duty use	
		I_1	I_{max}	S_n	I_2	P_n	I_{Ld}	P_{Ld}	I_{Hd}	P_{Hd}
		A	A	kVA	A	kW	A	kW	A	kW
046A-4	R6	40	64.6	31.2	45.0	22	42.8	22	38	18.5
062A-4	R6	51	77.5	43.0	62.0	30	58.9	30	45	22
073A-4	R6	63	105.4	50.6	73.0	37	69.4	37	62	30
088A-4	R6	76	124.1	61.0	88.0	45	83.6	45	73	37
106A-4	R8	94	150	73.4	106	55	101	55	88	45
145A-4	R8	128	181	100.5	145	75	138	75	106	55
169A-4	R8	154	247	117.1	169	90	161	90	145	75
206A-4	R8	188	287	142.7	206	110	196	110	169	90

ACH580-31-...	Frame size	Input rating[1)]	Max. current	App. power	Output ratings			
					Light-duty use		Heavy-duty use	
		I_1	I_{max}	S_n	I_{Ld}	P_{Ld}	I_{Hd}	P_{Hd}
		A	A	kVA	A	hp	A	hp
3-phase U_n = 480 V								
09A5-4	R3	7.0	12.2	6.3	7.6	5	5.2	3
12A7-4	R3	9.0	16.1	10.0	12	7.5	7.6	5
018A-4	R3	12.0	21.4	11.6	14	10	12.0	7.5
026A-4	R3	17.0	28.8	19.1	23	15	14.0	10
033A-4	R6	24	42.5	22.4	27	20	23	15
039A-4	R6	29	54.4	28.3	34	25	27	20
046A-4	R6	34	64.6	36.6	44	30	34	25
062A-4	R6	44	77.5	43.2	52	40	44	30
073A-4	R6	54	105.4	54.0	65	50	52	40
088A-4	R6	66	124.1	64.0	77	60	65	50
106A-4	R8	82	150	79.8	96	75	77	60
145A-4	R8	111	181	103.1	124	100	96	75
169A-4	R8	134	247	129.7	156	125	124	100
206A-4	R8	163	287	149.6	180	150	156	125

UL (NEC) ratings

ACH580-31-...	Frame size	Input rating[1)]	Max. current	App. power	Output ratings			
					Light-duty use		Heavy duty-use	
		I_1	I_{max}	S_n	I_{Ld}	P_{Ld}	I_{Hd}	P_{Hd}
		A	A	kVA	A	hp	A	hp
3-phase U_n = 208/230 V								
017A-2	R3	14	22.6	6.0	16.7	5	10.6	3
024A-2	R3	20	28.8	8.7	24.2	7.5	16.7	5
031A-2	R6	28	43.6	11.1	30.8	10	24.2	7.5
046A-2	R6	40	62.4	16.6	46.2	15	30.8	10
059A-2	R6	53	83.2	21.4	59.4	20	46.2	15
075A-2	R6	66	107	26.9	74.8	25	59.4	20
088A-2	R6	76	124	31.7	88	30	74.8	25
114A-2	R8	98	158	41.1	114	40	88	30
143A-2	R8	128	181	51.5	143	50	114	40
169A-2	R8	152	247	60.9	169	60	143	50
211A-2	R8	188	287	76.0	211	75	169	60
3-phase U_n = 480 V								
07A6-4	R3	7.0	9.5	6.3	7.6	5	5.2	3
012A-4	R3	9.0	15.0	10.0	12	7.5	7.6	5
014A-4	R3	12.0	20.4	11.6	14	10	12.0	7.5
023A-4	R3	17.0	28.8	19.1	23	15	14.0	10
027A-4	R6	24	39.1	22.4	27	20	23	15
034A-4	R6	29	45.9	28.3	34	25	27	20
044A-4	R6	34	57.8	36.6	44	30	34	25
052A-4	R6	44	74.8	43.2	52	40	44	30
065A-4	R6	54	88.4	54.0	65	50	52	40
077A-4	R6	66	110.5	64.0	77	60	65	50
096A-4	R8	82	130.9	79.8	96	75	77	60
124A-4	R8	111	163.2	103.1	124	100	96	75
156A-4	R8	134	210.8	129.7	156	125	124	100
180A-4	R8	163	265.2	149.6	180	150	156	125

1) When the DC voltage is boosted, the drive can draw more input current than shown on the type designation label. This is the case when the motor is running continuously at or near the field weakening area and when the drive is running at or near nominal load. It can be a result of certain combinations of DC voltage boost levels and drive-type-specific derating curves.

The rise in input current can heat the input cable and fuses. To avoid heating, select an input cable and fuses according to the increased input current caused by the DC voltage boost. For more information, refer to ACH580-31, ACQ580-31, ACH580-34 and ACQ580-34 drives product note on DC voltage boost (3AXD50000769407 [English]).

Definitions

U_n	Nominal input voltage of the drive. For input voltage range, see section Electrical power network specification (page 212). 50 Hz for IEC ratings, 60 Hz for UL (NEC) ratings.
I_1	Nominal input current (rms) at 40 °C (104 °F). Continuous rms input current (for dimensioning cables and fuses).
I_2	Nominal output current (available continuously with no overload)
I_{max}	Maximum output current. Available for two seconds at start. After start, available as long as allowed by drive temperature.
S_n	Apparent power at nominal load
P_n	Typical motor power (no overload). The kilowatt ratings apply to most IEC 4-pole motors. The horsepower ratings apply to most NEMA 4-pole motors.
I_{Ld}	Maximum current with 10% overload, allowed for one minute every ten minutes when parameter 97.02 Minimum switching frequency is set to 2 kHz or less
P_{Ld}	Typical motor power in light-duty use (10% overload). The kilowatt ratings apply to most IEC 4-pole motors. The horsepower ratings apply to most NEMA 4-pole 460 V motors.
I_{Hd}	Maximum current with 50% overload, allowed for one minute every ten minutes 1) Maximum current with 30% overload, allowed for one minute every ten minutes 2) Maximum current with 25% overload, allowed for one minute every ten minutes
P_{Hd}	Typical motor power in heavy-duty use (50% overload). The kilowatt ratings apply to most IEC 4-pole motors. The horsepower ratings apply to most NEMA 4-pole 460 V motors.

Sizing

Drive sizing is based on the rated motor current, voltage and power. To achieve the rated motor power given in the ratings table, the rated current of the drive must be higher than or equal to the rated motor current. Also the rated power of the drive must be higher than or equal to the rated motor power. The power ratings are the same regardless of the supply voltage within one voltage range.

ABB recommends to select the drive and motor combination for the required motion profile with the DriveSize tool available from http://new.abb.com/drives/software-tools/drivesize.

Deratings

The load capacity (I_2, I_{Ld}, I_{Hd}) decreases for certain situations, as defined below. I_{max} is not derated. If full motor power is necessary, oversize the drive so that the derated value gives sufficient capacity.

Cumulative deratings

An example of cumulative derating (switching frequency plus altitude derating) is given below.

If your application requires continuous 12.0 A of motor current at 8 kHz switching frequency, the supply voltage is 400 V and the drive is situated at 1500 m, calculate the appropriate drive size as follows.

See Switching frequency derating (page 184).

The minimum required current is 12.0 A / 0.7 = 17.2 A, where 0.7 is the derating factor for 8 kHz switching frequency for frame R3 drives.

See Altitude derating (page 183).

The derating factor for 1500 m:

$$k = 1 - \frac{1500 - 1000\ m}{10000\ m}$$

= 0.95.

The minimum current becomes then 17.2 A / 0.95 = 18.1 A.

Nominal current of drive type -025A-4 is greater than the current requirement of 18.1 A.

Surrounding air temperature derating

Temperature range	Derating
All drives except IP55 (UL Type 12) drive type -206A-4	
up to +40 °C (+104 °F)	No derating

Temperature range	Derating
+40…+50 °C (+104…+122 °F)	Derate 1% for every 1 °C (1.8 °F): To calculate the output, multiply the current given in the rating table by the derating factor (k, in the diagram below). 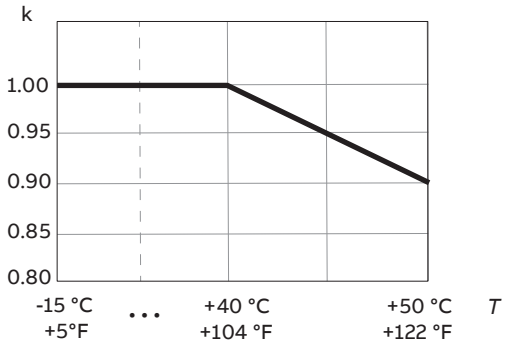

Temperature range	Derating
IP55 (UL Type 12) drive type -206A-4	
up to +40 °C (+104 °F)	No derating
+40 … +50 °C (+104 … +122 °F)	In the temperature range +40 … +45 °C, derate 1% for every added 1 °C (1.8 °F). In the temperature range +45 … +50 °C, derate 1.5% for every added 1 °C (1.8 °F). To calculate the output, multiply the current given in the rating table by the derating factor (k, in the diagram below). 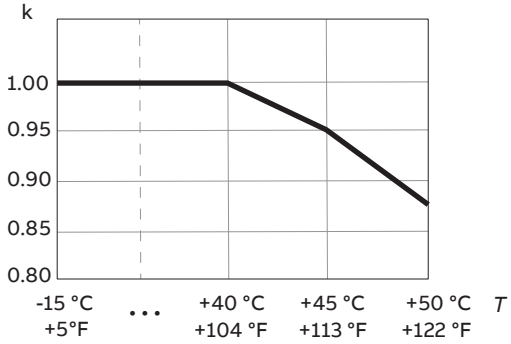

Note: For ambient temperatures above +40 °C (+104 °F), the power cables must be rated for 90 °C (194 °F) minimum.

Altitude derating

At altitudes more than 1000 m (3281 ft) above sea level, the output current derating is 1 percentage point for every added 100 m (328 ft). For example, the derating factor for 1500 m (4921 ft) is 0.95. The maximum permitted installation altitude is given in the technical data.

If the surrounding air temperature is less than +40 °C (104 °F), the derating can be reduced by 1.5 percentage points for every 1 °C (1.8 °F) reduction in temperature. A few altitude derating curves are shown below.

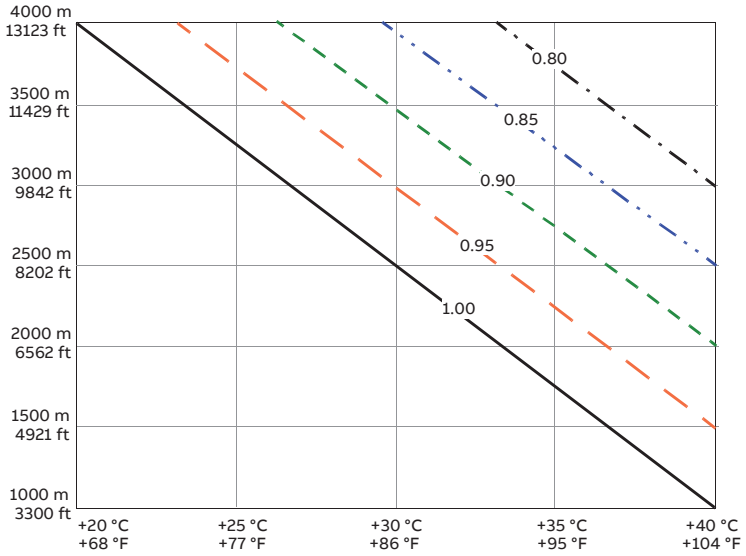

	Derating factor 1.00
	Derating factor 0.95
	Derating factor 0.90
	Derating factor 0.85
	Derating factor 0.80

For a more accurate derating, use the DriveSize PC tool.

To calculate the output current, multiply the current given in the rating table by derating factor *k*:

$$k = 1 - \frac{x - 1000\ m}{10000\ m}$$

$$k = 1 - \frac{x - 3281\ ft}{32810\ ft}$$

Switching frequency derating

To calculate the output current, multiply the current given in the rating table by the derating factor given in the table below.

Note: If you change the minimum switching frequency with parameter 97.02 Minimum switching frequency, derate according to the table below. Changing parameter 97.01 Switching frequency reference does not require derating.

IEC Ratings						
ACH580-31-...	**Derating factor (k) for the minimum switching frequencies**					**Frame**
	1 kHz	**2 kHz**	**4 kHz**	**8 kHz**	**12 kHz**	
3-phase U_n = 400 V						
09A5-4	1.0	1.0	1.0	0.74	0.52	R3
12A7-4	1.0	1.0	1.0	0.74	0.52	R3
018A-4	1.0	1.0	1.0	0.74	0.52	R3
026A-4	1.0	1.0	1.0	0.74	0.52	R3
033A-4	1.0	1.0	1.0	0.67	0.52	R6
039A-4	1.0	1.0	1.0	0.67	0.52	R6
046A-4	1.0	1.0	1.0	0.67	0.52	R6
062A-4	1.0	1.0	1.0	0.67	0.52	R6
073A-4	1.0	1.0	1.0	0.67	0.52	R6
088A-4	1.0	1.0	1.0	0.67	0.52	R6
106A-4	1.0	1.0	1.0	1.00	-	R8
145A-4	1.0	1.0	1.0	0.84	-	R8
169A-4	1.0	1.0	1.0	0.72	-	R8
3-phase U_n = 480 V						
09A5-4	1.0	1.0	1.0	0.74	0.52	R3
12A7-4	1.0	1.0	1.0	0.74	0.52	R3
018A-4	1.0	1.0	1.0	0.74	0.52	R3
026A-4	1.0	1.0	1.0	0.74	0.52	R3

IEC Ratings						
ACH580-31-...	**Derating factor (k) for the minimum switching frequencies**					**Frame**
	1 kHz	**2 kHz**	**4 kHz**	**8 kHz**	**12 kHz**	
033A-4	1.0	1.0	1.0	0.67	0.52	R6
039A-4	1.0	1.0	1.0	0.67	0.52	R6
046A-4	1.0	1.0	1.0	0.67	0.52	R6
062A-4	1.0	1.0	1.0	0.67	0.52	R6
073A-4	1.0	1.0	1.0	0.67	0.52	R6
088A-4	1.0	1.0	1.0	0.67	0.52	R6
106A-4	1.0	1.0	1.0	1.00	-	R8
145A-4	1.0	1.0	1.0	0.84	-	R8
169A-4	1.0	1.0	1.0	0.72	-	R8
206A-4	1.0	1.0	1.0	0.63	-	R8

UL (NEC) Ratings						
ACH580-31-...	**Derating factor (k) for the minimum switching frequencies**					**Frame**
	1 kHz	**2 kHz**	**4 kHz**	**8 kHz**	**12 kHz**	
3-phase U_n = 208/230 V						
017A-2	1.0	1.0	1.0	0.86	0.74	R3
024A-2	1.0	1.0	1.0	0.86	0.74	R3
031A-2	1.0	1.0	1.0	0.75	0.67	R6
046A-2	1.0	1.0	1.0	0.75	0.67	R6
059A-2	1.0	1.0	1.0	0.75	0.67	R6
075A-2	1.0	1.0	1.0	0.75	0.67	R6
088A-2	1.0	1.0	1.0	0.75	0.67	R6
114A-2	1.0	1.0	1.0	1.0	-	R8
143A-2	1.0	1.0	1.0	0.84	-	R8
169A-2	1.0	1.0	1.0	0.72	-	R8
211A-2	1.0	1.0	1.0	0.63	-	R8
3-phase U_n = 480 V						
07A6-4	1.0	1.0	1.0	0.74	0.52	R3
012A-4	1.0	1.0	1.0	0.74	0.52	R3
014A-4	1.0	1.0	1.0	0.74	0.52	R3
023A-4	1.0	1.0	1.0	0.74	0.52	R3
027A-4	1.0	1.0	1.0	0.67	0.52	R6
034A-4	1.0	1.0	1.0	0.67	0.52	R6
044A-4	1.0	1.0	1.0	0.67	0.52	R6
052A-4	1.0	1.0	1.0	0.67	0.52	R6
065A-4	1.0	1.0	1.0	0.67	0.52	R6
077A-4	1.0	1.0	1.0	0.67	0.52	R6
096A-4	1.0	1.0	1.0	1.0	-	R8
124A-4	1.0	1.0	1.0	1.0	-	R8
156A-4	1.0	1.0	1.0	0.72	-	R8
180A-4	1.0	1.0	1.0	0.63	-	R8

Output voltage boost derating

The drive can output a higher motor voltage than the supply voltage. This can require derating of the drive output power depending on the difference between the supply voltage and the output voltage to the motor for continuous operation.

208/230 V, 400 V and 480 V drive types

This graph shows the required derating for 208/230 V, 400 V and 480 V drive types.

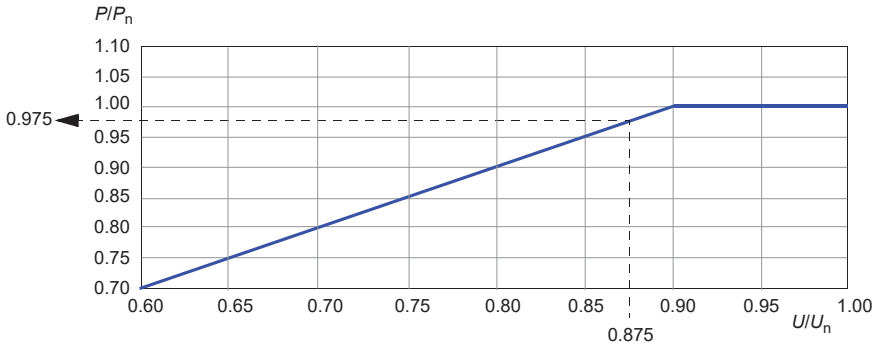

U	Actual supply voltage to the drive. (Nominal values: U = 208/230 V or U = 400 V or U = 480 V when P_n refers to nominal power ratings in the UL (NEC) tables.)
U_n	Motor nominal voltage or the required drive output voltage
P	Derated output power of the drive
P_n	Nominal power rating of the drive

Example 1: P_n for -206A-4 is 110 kW. The supply voltage (U) is 350 V. The motor nominal voltage is 400 V.

Calculate the ratio between the supply voltage and required output voltage as follows: U/U_n = 350 V / 400 V = 0.875. From the graph you can see that P/P_n = 0.975.

The derated power P = 0.975 × 110 kW = 107 kW.

To boost the output voltage to correspond the nominal supply voltage 400 V, increase the DC voltage to 400 V × √2 = 567 V.

Example 2: P_n for -096A-4 is 75 hp. The supply voltage (U) is 450 V.

U/U_n = 450 V / 480 V = 0.938. From the graph you can see that P/P_n = 1.00.

The derated power P = 1.00 × 75 hp = 75 hp.

To boost the output voltage to correspond the nominal supply voltage 480 V, increase the DC voltage to 480 V × √2 = 679 V.

Fuses (IEC)

Fuses protect the input cable in short-circuit situations. They also restrict drive damage and prevent damage to adjoining equipment in case of a short-circuit inside the drive. ABB recommends the high speed aR fuses specified below. The gG fuses can be used for frame R3 if they operate rapidly enough (max. 0.1 seconds). The operating time depends on the supply network impedance and the cross-sectional area and length of the supply cable. Obey the local regulations.

Note: You can use fuses from other manufacturers if they agree with the ratings and the melting curve of the fuse does not exceed the melting curve of the fuse given in the table.

aR fuses DIN 43653 stud-mount

ACH580-31-...	Min. short-circuit current [1]	Input current	Ultra-rapid (aR) fuses stud-mount (one fuse per phase)				
			Nominal current	I^2t	Voltage rating	Bussman type	Type DIN 43653
	A	A	A	A^2s	V		
3-phase U_n = 400 V							
09A5-4	70	8.0	10	25.5	690	170M1308	000
12A7-4	70	10.0	16	48	690	170M1309	000
018A-4	70	14.0	25	130	690	170M1311	000
026A-4	100	20.0	25	130	690	170M1311	000
033A-4	110	27.0	40	460	690	170M1313	000
039A-4	210	33.0	63	1450	690	170M1315	000
046A-4	300	40.0	63	1450	690	170M1315	000
062A-4	300	51.0	80	2550	690	170M1316	000
073A-4	400	63.0	100	4650	690	170M1317	000
088A-4	700	76.0	125	8500	690	170M1318	000
106A-4	700	94	160	16000	690	170M1319	000
145A-4	970	128	200	15000	690	170M3015	000
169A-4	1100	154	250	28500	690	170M3016	00
206A-4	1600	188	315	46500	690	170M3017	00

[1] Minimum short-circuit current of the electrical power system

aR fuses DIN 43620 blade style

ACH580-31-...	Min. short-circuit current[1]	Input current	Ultra-rapid (aR) fuses blade style (one fuse per phase)				
			Nominal current	I^2t	Voltage rating	Bussmann type	Type DIN 43620
	A	A	A	A^2s	V		
3-phase U_n = 400 V							
09A5-4	65	8.0	25	130	690	170M1561	000
12A7-4	65	10.0	25	130	690	170M1561	000
018A-4	120	14.0	40	460	690	170M1563	000
026A-4	120	20.0	40	460	690	170M1563	000
033A-4	170	27.0	63	1450	690	170M1565	000
039A-4	170	33.0	63	1450	690	170M1565	000
046A-4	280	40.0	80	2550	690	170M1566	000
062A-4	380	51.0	100	4650	690	170M1567	000
073A-4	500	63.0	125	8500	690	170M1568	000
088A-4	700	76.0	160	16000	690	170M1569	000
106A-4	700	94	160	16500	690	170M1569	000
145A-4	900	128	315	46500	690	170M3817	000
169A-4	1900	154	400	79000	690	170M5808	2
206A-4	2200	188	450	155000	690	170M5809	2

[1] Minimum short-circuit current of the electrical power system

gG fuses DIN 43620 blade style

gG fuses can be used for frame R3 if they operate rapidly enough (max. 0.1 seconds). ABB recommends, however, aR fuses. **gG fuses are not permitted for frames R6 and R8.**

ACH580-31-...	Min. short-circuit current[1]	Input current	gG fuses (one fuse per phase)				
			Nominal current	I^2t	Voltage rating	ABB type	IEC 60269 size
	A	A	A	A^2s	V		
3-phase U_n = 400 V							
09A5-4	128	8.0	16	740	500	OFAF000H16	000
12A7-4	128	10.0	16	740	500	OFAF000H16	000
018A-4	200	14.0	25	2500	500	OFAF000H25	000
026A-4	256	20.0	32	4000	500	OFAF000H32	000

1) Minimum short-circuit current of the installation

Calculating the short-circuit current of the installation

Make sure that the short-circuit current of the installation is at least the value given in the fuse table.

The short-circuit current of the installation can be calculated as follows:

$$I_{k2\text{-}ph} = \frac{U}{2 \cdot \sqrt{R_c^2 + (Z_k + X_c)^2}}$$

where

$I_{k2\text{-}ph}$	Short-circuit current in symmetrical two-phase short-circuit
U	Network line-to-line voltage (V)
R_c	Cable resistance (ohm)
Z_k	$Z_k = z_k \cdot U_n^2 / S_n$ = transformer impedance (ohm)
z_k	Transformer impedance (%)
U_n	Transformer rated voltage (V)
S_n	Nominal apparent power of the transformer (kVA)
X_c	Cable reactance (ohm)

Calculation example

Drive:

- ACH580-31-145A-4
- supply voltage = 410 V

Transformer:

- rated power S_n = 600 kVA
- rated secondary voltage (supply for drive supply) U_n = 430 V
- transformer impedance z_k = 7.2%

Supply cable:

- length = 170 m
- resistance/length = 0.398 ohm/km
- reactance/length = 0.082 ohm/km.

$$Z_k = z_k \cdot \frac{U_N^2}{S_N} = 0.072 \cdot \frac{(430\ \text{V})^2}{600\ \text{kVA}} = 22.19\ \text{mohm}$$

$$R_c = 170\ \text{m} \cdot 0.398\ \frac{\text{ohm}}{\text{km}} = 67.66\ \text{mohm}$$

$$X_c = 170\ \text{m} \cdot 0.082\ \frac{\text{ohm}}{\text{km}} = 13.94\ \text{mohm}$$

$$I_{k2\text{-}ph} = \frac{410\ \text{V}}{2 \cdot \sqrt{(67.66\ \text{mohm})^2 + (22.19\ \text{mohm} + 13.94\ \text{mohm})^2}} = 2.7\ \text{kA}$$

The calculated short-circuit current 2.7 kA is greater than the minimum short-circuit current of the drive aR fuse type 170M3817 (900 A). -> The 690 V aR fuse (Bussmann 170M3817) can be used.

Fuses (UL)

The UL Listed fuses in this manual are required for branch circuit protection and required per NEC. The drives are suitable for use on a circuit capable of delivering not more than 100 kA symmetrical amperes (rms) at 480 V maximum when protected by the fuses given below.

ABB recommends Class T fuses listed below. Also allowed are UL Listed 248-8 Class J fast acting, time delay, and high speed fuses, 248-4 Class CC fast acting fuses and 248-17 Class CF fast acting and time delay fuses of the same nominal voltage and current rating.

Refer to notes below the table.

ACH580-31-...	Input current	UL (one fuse per phase)			
		Nominal current	Voltage rating	Bussmann type	UL class
	A	A	V		
UL (NEC) ratings: 3-phase U_n = 208/230 V					
017A-2	14	25	600	JJS-25	T
024A-2	20	35	600	JJS-35	T
031A-2	28	40	600	JJS-40	T
046A-2	40	60	600	JJS-60	T
059A-2	53	80	600	JJS-80	T
075A-2	66	90	600	JJS-90	T
088A-2	76	110	600	JJS-110	T
114A-2	98	150	600	JJS-150	T
143A-2	128	200	600	JJS-200	T
169A-2	152	225	600	JJS-225	T
211A-2	188	300	600	JJS-300	T
UL (NEC) ratings: 3-phase U_n = 480 V					
07A6-4	7.0	15	600	JJS-15	T
012A-4	9.0	20	600	JJS-20	T
014A-4	12.0	25	600	JJS-25	T
023A-4	17.0	35	600	JJS-35	T
027A-4	24	40	600	JJS-40	T
034A-4	29	50	600	JJS-50	T
044A-4	34	60	600	JJS-60	T

ACH580-31-...	Input current	UL (one fuse per phase)			
		Nominal current	Voltage rating	Bussmann type	UL class
	A	A	V		
052A-4	44	80	600	JJS-80	T
065A-4	54	90	600	JJS-90	T
077A-4	66	110	600	JJS-110	T
096A-4	82	150	600	JJS-150	T
124A-4	111	200	600	JJS-200	T
156A-4	134	225	600	JJS-225	T
180A-4	163	300	600	JJS-300	T
IEC ratings: 3-phase U_n = 480 V					
09A5-4	7.0	15	600	JJS-15	T
12A7-4	9.0	20	600	JJS-20	T
018A-4	12.0	25	600	JJS-25	T
026A-4	17.0	35	600	JJS-35	T
033A-4	24	40	600	JJS-40	T
039A-4	29	50	600	JJS-50	T
046A-4	34	60	600	JJS-60	T
062A-4	44	80	600	JJS-80	T
073A-4	54	90	600	JJS-90	T
088A-4	66	110	600	JJS-110	T
106A-4	82	150	600	JJS-150	T
145A-4	111	200	600	JJS-200	T
169A-4	134	225	600	JJS-225	T
206A-4	163	300	600	JJS-300	T

1. Fuses are required as part of the installation, are not included in the base drive configuration and must be provided by others.
2. Fuses with a higher current rating than specified must not be used.
3. The UL listed fuses recommended by ABB are the required branch circuit protection per NEC. Circuit breakers listed in section Circuit breakers (UL) are also acceptable as branch circuit protection.

4. The recommended size or smaller UL listed 248 fast acting, time delay, or high speed fuses must be used to maintain the UL listing of the drive. Additional protection can be used. Refer to local codes and regulations.
5. A fuse of a different class can be used at the high fault rating where the I_{peak} and I^2t of the new fuse is not greater than that of the specified fuse.
6. UL listed 248 fast acting, time delay, or high speed fuses from other manufacturers can be used if they meet the same class and rating requirements specified in the rules above.
7. When you install a drive, always obey ABB installation instructions, NEC requirements and local codes.
8. Alternative fuses can be used if they meet certain characteristics. For permitted fuses, see Branch Circuit Protection for ABB drives manual supplement (3AXD50000645015).

Circuit breakers (IEC)

ABB miniature and molded case circuit breakers

This section does not apply to the North American market. See section Circuit breakers (UL) (page 196).

The protective characteristics of circuit breakers depend on the type, construction and settings of the breakers. There are also limitations pertaining to the short-circuit capacity of the supply network.

WARNING!
Due to the inherent operating principle and construction of circuit breakers, independent of the manufacturer, hot ionized gases can escape from the breaker enclosure in case of a short-circuit. To make sure of safe use, pay special attention to the installation and placement of the breakers. Obey the manufacturer's instructions.

Note:

- Ratings in the tables are maximum for the given circuit breaker frame size.
- Breakers of the same frame size and interrupting rating with lower current ratings are also permitted.
- Do not use a circuit breaker with a lower KAIC rating even if the available short-circuit current is less than 65 kA.
- For the ABB circuit breaker configurator refer to: https://lowvoltage-configurator.tnb.com/configurator/#/config/tmax_xt.

You can use the circuit breakers listed below. Other circuit breakers can be used with the drive if they provide the same electrical characteristics. ABB does not assume any liability whatsoever for the correct function and protection with circuit breakers not listed below. Furthermore, if the recommendations given by ABB are not obeyed, the drive can experience problems that the warranty does not cover.

ACH580-31-...	Frame	ABB moulded case circuit breaker (Tmax)	
		Type	kA [1)]
U_n = 400 V			
09A5-4	R3	XT2H 160 EKIP DIP LS/I IN 25	65
12A7-4	R3	XT2H 160 EKIP DIP LS/I IN 25	65
018A-4	R3	XT2H 160 EKIP DIP LS/I IN 63	65
026A-4	R3	XT2H 160 EKIP DIP LS/I IN 63	65
033A-4	R6	XT2H 160 EKIP DIP LS/I IN 100	65

ACH580-31-...	Frame	ABB moulded case circuit breaker (Tmax)	
		Type	kA [1]
039A-4	R6	XT2H 160 EKIP DIP LS/I IN 100	65
046A-4	R6	XT2H 160 EKIP DIP LS/I IN 100	65
062A-4	R6	XT2H 160 EKIP DIP LS/I IN 160	65
073A-4	R6	XT2H 160 EKIP DIP LS/I IN 160	65
088A-4	R6	XT2H 160 EKIP DIP LS/I IN 160	65
106A-4	R8	XT4H 250 EKIP DIP LS/I In 250A	65
145A-4	R8	XT4H 250 EKIP DIP LS/I In 250A	65
169A-4	R8	XT4H 250 EKIP DIP LS/I In 250A	65
206A-4	R8	XT4H 250 EKIP DIP LS/I In 250A	65
U_n = 480 V			
09A5-4	R3	XT2H 160 EKIP DIP LS/I IN 25	65
12A7-4	R3	XT2H 160 EKIP DIP LS/I IN 25	65
018A-4	R3	XT2H 160 EKIP DIP LS/I IN 63	65
026A-4	R3	XT2H 160 EKIP DIP LS/I IN 63	65
033A-4	R6	XT2H 160 EKIP DIP LS/I IN 100	65
039A-4	R6	XT2H 160 EKIP DIP LS/I IN 100	65
046A-4	R6	XT2H 160 EKIP DIP LS/I IN 100	65
062A-4	R6	XT2H 160 EKIP DIP LS/I IN 160	65
073A-4	R6	XT2H 160 EKIP DIP LS/I IN 160	65
088A-4	R6	XT2H 160 EKIP DIP LS/I IN 160	65
106A-4	R8	XT4H 250 EKIP DIP LS/I In 250A	65
145A-4	R8	XT4H 250 EKIP DIP LS/I In 250A	65
169A-4	R8	XT4H 250 EKIP DIP LS/I In 250A	65
206A-4	R8	XT4H 250 EKIP DIP LS/I In 250A	65

[1] Maximum allowed rated conditional short-circuit current (IEC 61800-5-1) of the electrical power network.

Circuit breakers (UL)

The drives are suitable for use on a circuit capable of delivering not more than 65 kA symmetrical amperes (RMS) at 480 V maximum when protected by circuit breakers in the tables below.

Additional fuse protection is not required when using the circuit breakers herein. Circuit breakers are not required to be in the same enclosure as the drive.

Obey the notes below the table when you use these breakers.

Note: For permitted circuit breakers for 208/230 V, contact ABB.

ACH580-31-...	Frame	Input current	CB Maximum current	CB Voltage	Drive volume	ABB circuit breaker	Max. I^2t	Max. I_{peak}
		A	A	V	in^3	65kA @ 480V	A^2s	kA
3-phase U_n = 480 V								
07A6-4	R3	7.0	20	480	1638	XT2Hαβ020#********	0.512×10^6	23.2
012A-4	R3	9.0	20	480	1638	XT2Hαβ020#********	0.512×10^6	23.2
014A-4	R3	12.0	35	480	1638	XT2Hαβ035#********	0.512×10^6	23.2
023A-4	R3	17.0	35	480	1638	XT2Hαβ035#********	0.512×10^6	23.2
027A-4	R6	24	70	480	3507	XT2Hαβ070#********	0.512×10^6	23.2
034A-4	R6	29	70	480	3507	XT2Hαβ070#********	0.512×10^6	23.2
044A-4	R6	34	70	480	3507	XT2Hαβ070#********	0.512×10^6	23.2
052A-4	R6	44	125	480	3507	XT2Hαβ125#********	0.512×10^6	23.2
065A-4	R6	54	125	480	3507	XT2Hαβ125#********	0.512×10^6	23.2
077A-4	R6	66	125	480	3507	XT2Hαβ125#********	0.512×10^6	23.2
096A-4	R8	82	225	480	6602	XT4Hαβ225#********	0.98×10^6	30
124A-4	R8	111	225	480	6602	XT4Hαβ225#********	0.98×10^6	30
156A-4	R8	134	250	480	6602	XT4Hαβ250#********	0.98×10^6	30
180A-4	R8	163	250	480	6602	XT4Hαβ250#********	0.98×10^6	30

Notes:

1. Drives that have an enclosure minimum volume listed must be mounted in an enclosure ≥ enclosure minimum volume specified in the tables above.
2. When multiple drives that have an enclosure minimum volume specified are installed in the same enclosure, minimum volume of the enclosure is determined by the largest enclosure minimum volume of the drives to be placed in the enclosure, plus the volume(s) of each additional drive. i.e. for the 480 V R6 and R3 drive select enclosure with the volume ≥ 16200+1011 = 17211 in^3.
3. For UL Open Type, UL Type 1 or UL Type 12 drives that have a minimum enclosure volume indicated with ¤, no minimum enclosure volume is required but the drive must be mounted inside an enclosure.

4. If combining a drive with an enclosure minimum volume specified and others with an enclosure minimum volume indicated with ¤, start with the largest specified enclosure minimum volume listed and add the drive volumes for the other drives.
5. If you are only mounting drives with no enclosure minimum volume specified, you have no restrictions on the enclosure size, but follow air clearances specified in the drive hardware manuals for sufficient ventilation around each drive.
6. UL Open Type, UL Type 1 and UL Type 12 drives can be used inside of the enclosure. Use drive volume for all three types listed in the table when installing multiple drives in the enclosure.
7. The ABB circuit breaker part number listed in the table is a base part number.
   - Symbol α represents 80% or 100% allowable continuous current. Options allowed are U, Q, C and D.
   - Symbol β represents the number of poles for the breaker. Options allowed are 3 and 4.
   - Symbol # represents trip units. Trip units allowed include A thru C, E thru L, P thru Z. If using Ekip breakers, set the overload current of the circuit breaker equal to or less than the value shown in the “CB Maximum Current” column in the tables above.
   - The digits indicated with an “*” represent accessories for the breakers and have no impact on the drive UL listing or performance or rating of the breaker.
   - For the ABB circuit breaker configurator refer to: https://lowvoltage-configurator.tnb.com/configurator/#/config/tmax_xt.
8. Ratings in the tables are maximum for the given circuit breaker frame size. Breakers of the same frame size and interrupting rating with lower current ratings are also allowed.
9. Do not use a circuit breaker with a lower KAIC rating even if the available short-circuit current is less than 65 kA.
10. **For 480 V:** When designing UL508A panels, Article SB 4.2.3 Exception No. 3 allows the use of other manufacturers' current limiting inverse time circuit breakers which have same voltage, current and interrupting rating, if I_{peak} and I^2t are the same or less than the ABB specified circuit breaker.
11. **For 480 V:** Do not use non-current limiting inverse time circuit breakers.
12. You can use alternative circuit breakers if they meet certain characteristics. For acceptable breakers, refer to Branch Circuit Protection for ABB drives manual supplement (3AXD50000645015 [English]).

Dimensions, weights and free space requirements

Frame size	Weight	Weight	Height	Height	Width	Width	Depth	Depth
	kg	lb	mm	in	mm	in	mm	in
IP21 (UL Type 1)								
R3	21.3	47	495	19.49	205	8.07	354	13.94
R6	61	135	771	30.35	252	9.92	392	15.44
R8	118	260	965	38	300	11.81	438	17.24
IP55 (UL Type 12), option +B056 [1]								
R3	21.3	47	495	19.49	205	8.07	360	14.17
R6	63	139	771	30.35	252	9.92	448	17.65
R8	124	273	965	38	300	11.81	496	19.53
IP20 (option +P940)								
R3	18.3	40.34	490	19	203	7.99	349	13.74
R6	59	131	771	30.35	252	9.92	358	14
R8	115	254	965	38	300	11.81	430	16.93

[1] Hood not included

Frame size	Drive weight with flange kit (option +C135)			
	IP21	UL Type 1	IP55	UL Type 12
	kg	lb	kg	lb
R3	25.35	56.89	25.35	56
R6	66.80	148	68.88	152
R8	125.90	277.56	131.90	291

Free space requirements

See section Free space requirements (page 48).

Package dimensions and weights

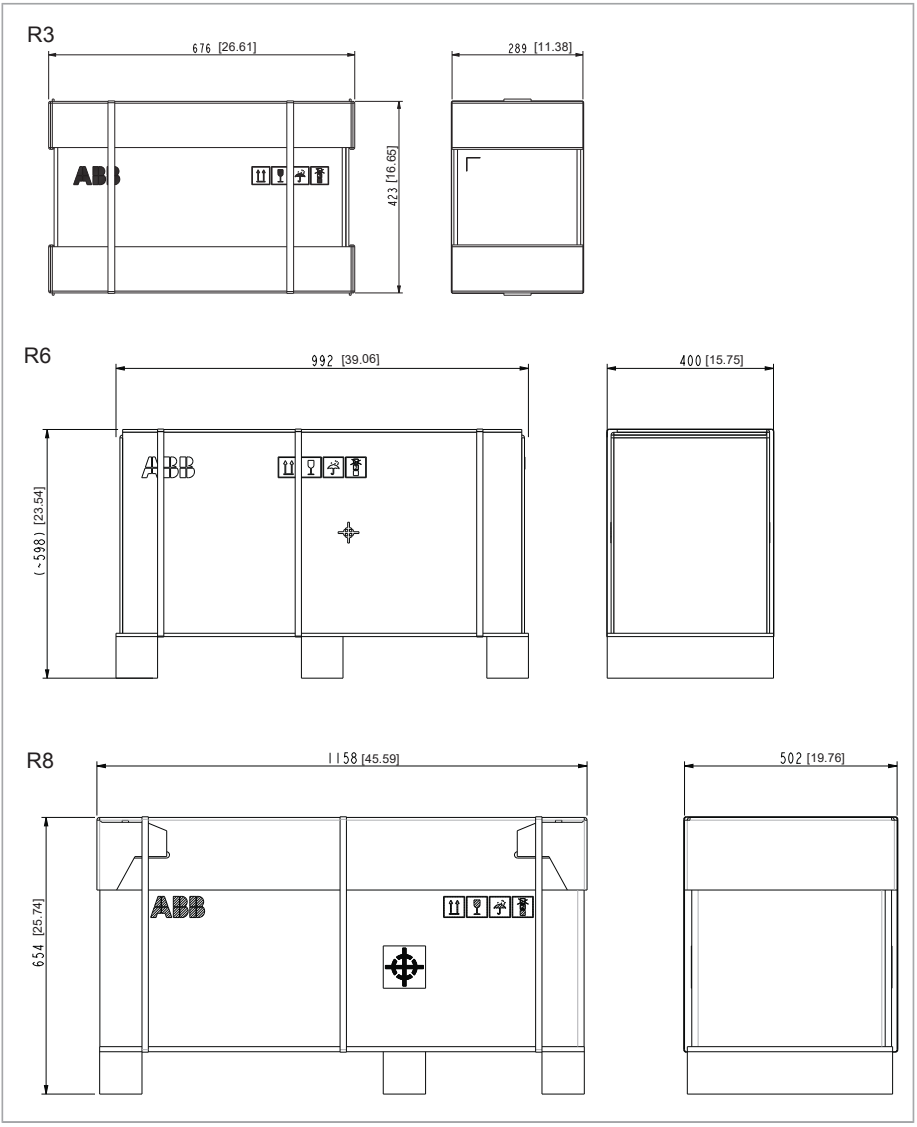

Frame size	Package weight	
	kg	lb
R3	23.4	51.6
R6	74.8	164.9
R8	136 [1)]	299.8 [2)]

1) for types -105A-3, 145A-3, -101A-5, -124A-5: 121 kg
2) for types -105A-3, 145A-3, -101A-5, -124A-5: 266.8 lb

Losses, cooling data and noise

The air flow direction is from bottom to top.

This table shows typical heat loss values, required air flow and noise at the nominal ratings of the drive. The heat loss values can vary depending on voltage, cable conditions, motor efficiency and power factor. To obtain more accurate values for given conditions, use ABB DriveSize tool (http://new.abb.com/drives/software-tools/drivesize).

IEC						
ACH580-31-...	Typical power loss [1)]		Air flow		Noise	Frame
	W	BTU/h	m^3/h	ft^3/min	dB(A)	
U_n = 400 V						
09A5-4	265	904	361	212	57	R3
12A7-4	429	1464	361	212	57	R3
018A-4	436	1488	361	212	57	R3
026A-4	792	2702	361	212	57	R3
033A-4	629	2146	550	324	71	R6
039A-4	812	2771	550	324	71	R6
046A-4	1063	3627	550	324	71	R6
062A-4	1093	3729	550	324	71	R6
073A-4	1419	4842	550	324	71	R6
088A-4	1967	6712	550	324	71	R6
106A-4	1574	5371	860/913 [2)]	506/537 [2)]	68	R8
145A-4	2577	8793	860/913 [2)]	506/537 [2)]	68	R8
169A-4	2963	10110	860/913 [2)]	506/537 [2)]	68	R8

IEC						
ACH580-31-...	**Typical power loss** [1]		**Air flow**		**Noise**	**Frame**
	W	**BTU/h**	**m^3/h**	**ft^3/min**	**dB(A)**	
206A-4	3566	12168	860/913 [2]	506/537 [2]	68	R8
U_n = 480 V						
09A5-4	265	904	361	212	57	R3
12A7-4	429	1464	361	212	57	R3
018A-4	436	1488	361	212	57	R3
026A-4	792	2702	361	212	57	R3
033A-4	629	2146	361	212	65	R6
039A-4	812	2771	550	324	71	R6
046A-4	1063	3627	550	324	71	R6
062A-4	1093	3729	550	324	71	R6
073A-4	1419	4842	550	324	71	R6
088A-4	1967	6712	550	324	71	R6
106A-4	1574	5371	860/913 [2]	506/537 [2]	68	R8
145A-4	2577	8793	860/913 [2]	506/537 [2]	68	R8
169A-4	2963	10110	860/913 [2]	506/537 [2]	68	R8
206A-4	3566	12168	860/913 [2]	506/537 [2]	68	R8

[1] Typical drive losses when it operates at 90% of the motor nominal frequency and 100% of the motor nominal current.

[2] IP21/IP55

UL (NEC)						
ACH580-31-...	**Typical power loss** [1]		**Air flow**		**Noise**	**Frame**
	W	**BTU/h**	**m^3/h**	**ft^3/min**	**dB(A)**	
U_n = 208/230 V						
017A-2	364	1242	361	212	57	R3
024A-2	677	2310	361	212	57	R3
031A-2	553	1887	550	324	71	R6
046A-2	1025	3497	550	324	71	R6
059A-2	933	3184	550	324	71	R6
075A-2	1341	4576	550	324	71	R6

UL (NEC)						
ACH580-31-...	**Typical power loss** [1]		**Air flow**		**Noise**	**Frame**
	W	**BTU/h**	**m^3/h**	**ft^3/min**	**dB(A)**	
088A-2	1756	5992	550	324	71	R6
114A-2	1642	5603	860/913 [2]	506/537 [2]	68	R8
143A-2	2349	8015	860/913 [2]	506/537 [2]	68	R8
169A-2	2761	9421	860/913 [2]	506/537 [2]	68	R8
211A-2	3474	11854	860/913 [2]	506/537 [2]	68	R8
U_n = 480 V						
07A6-4	223	761	361	212	57	R3
012A-4	442	1508	361	212	57	R3
014A-4	366	1249	361	212	57	R3
023A-4	765	2610	361	212	57	R3
027A-4	545	1860	550	32	71	R6
034A-4	761	2597	550	324	71	R6
044A-4	1146	3910	550	324	71	R6
052A-4	887	3027	550	324	71	R6
065A-4	1250	4265	550	324	71	R6
077A-4	1668	5691	550	324	71	R6
096A-4	1499	5115	860/913 [2]	506/537 [2]	68	R8
124A-4	2197	7496	860/913 [2]	506/537 [2]	68	R8
156A-4	2857	9748	860/913 [2]	506/537 [2]	68	R8
180A-4	3146	10735	860/913 [2]	506/537 [2]	68	R8

[1] Typical drive losses when it operates at 90% of the motor nominal frequency and 100% of the motor nominal current.

[2] IP21/IP55

Cooling air flow and heat dissipation for flange mounting (option +C135)

ACH580-31-...	Heat dissipation (option +C135)		Air flow (option +C135)				Frame
	Heatsink	Front	Heatsink		Front		
	W	W	m^3/h	ft^3/min	m^3/h	ft^3/min	
UL (NEC) ratings U_n = 208/230 V							
017A-2	264	41	361	212	0	0	R3
024A-2	417	44	361	212	0	0	R3
031A-2	456	45	498	293	52	31	R6
046A-2	695	49	498	293	52	31	R6
059A-2	842	52	498	293	52	31	R6
075A-2	1186	60	498	293	52	31	R6
088A-2	1520	68	498	293	52	31	R6
114A-2	1498	67	800	471	113	66	R8
143A-2	2396	92	800	471	113	66	R8
169A-2	2565	97	800	471	113	66	R8
211A-2	3241	120	800	471	113	66	R8
IEC ratings U_n = 400 V							
09A5-4	150	40	361	212	0	0	R3
12A7-4	252	41	361	212	0	0	R3
018A-4	317	42	361	212	0	0	R3
026A-4	497	46	361	212	0	0	R3
033A-4	542	47	498	293	52	31	R6
039A-4	666	49	498	293	52	31	R6
046A-4	824	52	498	293	52	31	R6
062A-4	996	56	498	293	52	31	R6
073A-4	1401	65	498	293	52	31	R6
088A-4	1793	75	498	293	52	31	R6
106A-4	1767	74	800	471	113	66	R8
145A-4	2822	105	800	471	113	66	R8
169A-4	3020	112	800	471	113	66	R8
206A-4	3813	141	800	471	113	66	R8

ACH580-31-...	Heat dissipation (option +C135)		Air flow (option +C135)				Frame
	Heatsink	Front	Heatsink		Front		
	W	W	m^3/h	ft^3/min	m^3/h	ft^3/min	
IEC ratings U_n = 480 V							
09A5-4	144	39	361	212	0	0	R3
12A7-4	202	40	361	212	0	0	R3
018A-4	244	41	361	212	0	0	R3
026A-4	393	44	361	212	0	0	R3
033A-4	542	47	498	293	52	31	R6
039A-4	627	48	498	293	52	31	R6
046A-4	721	50	498	293	52	31	R6
062A-4	871	53	498	293	52	31	R6
073A-4	1128	59	498	293	52	31	R6
088A-4	1458	66	498	293	52	31	R6
106A-4	1573	69	800	471	113	66	R8
145A-4	2117	84	800	471	113	66	R8
169A-4	2660	100	800	471	113	66	R8
206A-4	3201	118	800	471	113	66	R8
UL (NEC) ratings U_n = 480 V							
07A6-4	144	39	361	212	0	0	R3
012A-4	202	40	361	212	0	0	R3
014A-4	244	41	361	212	0	0	R3
023A-4	393	44	361	212	0	0	R3
027A-4	542	47	498	293	52	31	R6
034A-4	627	48	498	293	52	31	R6
044A-4	721	50	498	293	52	31	R6
052A-4	871	53	498	293	52	31	R6
065A-4	1128	59	498	293	52	31	R6
077A-4	1458	66	498	293	52	31	R6
096A-4	1573	69	800	471	113	66	R8
124A-4	2117	84	800	471	113	66	R8
156A-4	2660	100	800	471	113	66	R8

ACH580-31-...	Heat dissipation (option +C135)		Air flow (option +C135)				Frame
	Heatsink	Front	Heatsink		Front		
	W	W	m^3/h	ft^3/min	m^3/h	ft^3/min	
180A-4	3201	118	800	471	113	66	R8

These losses are not calculated according to the ecodesign standard IEC 61800-9-2.

Terminal and entry data for the power cables

IEC

Input, motor and DC cable entries, maximum wire sizes (per phase) and terminal screw sizes and tightening torques are given below.

Note that the terminals do not accept a conductor that is one size larger than the maximum specified wire size. The maximum number of conductors per terminal is 1.

Frame	Cable entries		L1, L2, L3, T1/U, T2/V, T3/W, UD+, UDC- terminals				PE terminal		
	pcs	ø 1)	Min wire size (solid/ stranded) 2)	Max wire size (solid/ stranded)	Wire screw	*T*	Wire size	Wire screw	*T*
		mm	mm^2	mm^2	M...	N·m	mm^2	M...	N·m
R3	3	23	0.5	16.0	M4	1.7	25	M5	1.7
R6	3	45	6.0	70.0	M8	15	35	M6	2.9
R8	3	45	25	150	M10	30	185	M6	9.8

1) Maximum cable diameter accepted. For the bottom plate hole diameters, see chapter Dimension drawings (page 229).

2) Minimum wire size does not necessarily have enough current capability for full load. Make sure the installation complies with local laws and regulations.

Note: Only copper cables are allowed for drive types up to -039A-4.

Frame	Screwdrivers for the terminals of the main circuit
R3	Flat blade 0.6 x 3.5 mm

UL

Input, motor and DC cable entries, maximum wire sizes (per phase) and terminal screw sizes and tightening torques are given below.

Note that the terminals do not accept a conductor that is one size larger than the maximum specified wire size. The maximum number of conductors per terminal is 1.

Frame	Cable entries		L1, L2, L3, T1/U, T2/V, T3/W, UD+, UDC- terminals				PE terminal		
	pcs	ø 1)	Min wire size (solid/ stran-ded) 2)	Max wire size (solid/ stranded)	Wire screw	*T*	Wire size	Wire screw	*T*
		in	AWG	AWG	M...	lbf·ft	AWG/kcmil	M...	lbf·ft
R3	3	0.91	20	6	M4	1.3	4	M5	1.2
R6	3	1.77	6	1/0	M8	11.1	2	M6	2.1

Frame	Cable entries		L1, L2, L3, T1/U, T2/V, T3/W, UD+, UDC- terminals				PE terminal		
	pcs	ø [1]	Min wire size (solid/ stranded) [2]	Max wire size (solid/ stranded)	Wire screw	*T*	Wire size	Wire screw	*T*
		in	AWG	AWG	M...	lbf·ft	AWG/kcmil	M...	lbf·ft
R8	3	1.77	4	300 MCM	M10	22.5	350 MCM	M6	7.2

[1] Maximum cable diameter accepted. For the bottom plate hole diameters, see chapter Dimension drawings (page 229).

[2] Minimum wire size does not necessarily have enough current capability for full load. Make sure the installation complies with local laws and regulations.

Terminal and entry data for the control cables

IEC

Control cable entries, wire sizes and tightening torques (*T*) are given below.

Frame	Cable entries		Control cable entries and terminal sizes			
	Holes	Max cable size	+24V, DCOM, DGND, EXT. 24V terminals		DI, AI/O, AGND, RO, STO terminals	
			Wire size	*T*	Wire size	*T*
	pcs	mm	mm^2	N·m	mm^2	N·m
R3	4	17	0.2…2.5	0.5…0.6	0.14…2.5	0.5…0.6
R6	4	17	0.14…2.5	0.5…0.6	0.14…2.5	0.5…0.6
R8	4	17	0.14…2.5	0.5…0.6	0.14…2.5	0.5…0.6

UL

Control cable entries, wire sizes and tightening torques (*T*) are given below.

Frame size	Cable entries		Control cable entries and terminal sizes			
	Holes	Max cable size	+24V, DCOM, DGND, EXT. 24V terminals		DI, AI/O, AGND, RO, STO terminals	
			Wire size	*T*	Wire size	*T*
	pcs	in	AWG	lbf·ft	AWG	lbf·ft
R3	4	0.67	24…14	0.4	26…14	0.4
R6	4	0.67	26…14	0.4	26…14	0.4
R8	4	0.67	26…14	0.4	26…14	0.4

Typical power cables

The table below gives typical copper and aluminum cable types with concentric copper shield for the drives with nominal current. For protective earth conductor sizing, see Grounding requirements (page 77). For terminal and entry data for power cables, see Terminal and entry data for the power cables (page 207).

ACH580-31-...	Frame size	IEC [1]		UL (NEC) [2] [3]
		Cu cable type	Al cable type [4]	Cu cable type
		mm²	mm²	AWG/kcmil
U_n = 208/230 V				
017A-2	R3	-	-	10
024A-2	R3	-	-	10
031A-2	R6	-	-	8
046A-2	R6	-	-	4
059A-2	R6	-	-	4
075A-2	R8	-	-	2
088A-2	R6	-	-	1/0
114A-2	R8	-	-	2/0
143A-2	R8	-	-	4/0
169A-2	R8	-	-	250 MCM
211A-2	R8	-	-	300 MCM
U_n = 400 V				
09A5-4	R3	3×2.5	-	14
12A7-4	R3	3×2.5	-	14
018A-4	R3	3×2.5	-	14
026A-4	R3	3×6	-	10
033A-4	R6	3×10	3×16	8
039A-4	R6	3×10	3×16	8
046A-4	R6	3×16	3×25	6
062A-4	R6	3×25	3×35	4
073A-4	R6	3×35	3×50	2
088A-4	R6	3×50	3×70	1/0
106A-4	R8	3×70	3×70	2/0

ACH580-31-...	Frame size	IEC [1]		UL (NEC) [2] [3]
		Cu cable type	Al cable type [4]	Cu cable type
		mm²	mm²	AWG/kcmil
145A-4	R8	3×95	3×120	3/0
169A-4	R8	3×120	3×150	250 MCM
206A-4	R8	3×150	3×240	300 MCM
U_n = 480 V (IEC)				
09A5-4	R3	3×2.5	-	14
12A7-4	R3	3×2.5	-	14
018A-4	R3	3×2.5	-	14
026A-4	R3	3×6	-	10
033A-4	R6	3×10	3×16	8
039A-4	R6	3×10	3×16	8
046A-4	R6	3×16	3×25	6
062A-4	R6	3×25	3×35	4
073A-4	R6	3×35	3×50	2
088A-4	R6	3×50	3×70	1/0
106A-4	R8	3×70	3×70	2/0
145A-4	R8	3×95	3×120	3/0
169A-4	R8	3×120	3×150	250 MCM
206A-4	R8	3×150	3×240	300 MCM
U_n = 480 V (NEC)				
07A6-4	R3	3×2.5	-	14
012A-4	R3	3×2.5	-	14
014A-4	R3	3×2.5	-	14
023A-4	R3	3×6	-	10
027A-4	R6	3×10	3×16	8
034A-4	R6	3×10	3×16	8
044A-4	R6	3×16	3×25	6
052A-4	R6	3×25	3×35	4
065A-4	R6	3×35	3×50	2
077A-4	R6	3×35	3×50	2

ACH580-31-...	Frame size	IEC [1]		UL (NEC) [2] [3]
		Cu cable type	Al cable type [4]	Cu cable type
		mm^2	mm^2	AWG/kcmil
096A-4	R8	3×50	3×70	1/0
124A-4	R8	3×70	3×95	2/0
156A-4	R8	3×95	3×150	4/0
180A-4	R8	3×120	3×185	250 MCM

1) The cable selection is based on max. 9 cables laid on a cable ladder side by side, three ladder type trays one on top of the other, ambient temperature 30 °C (86 °F) PVC insulation, surface temperature 70 °C (158 °F) (EN 60204-1 and IEC 60364-5-52). For other conditions, select the cables according to local safety regulations, appropriate input voltage and the load current of the drive.

2) The cable selection is based on NEC Table 310-16 for copper wires, 75 °C (167 °F) wire insulation at 40 °C (104 °F) ambient temperature. Not more than three current-carrying conductors in raceway or cable or earth (directly buried). For other conditions, dimension the cables according to local safety regulations, appropriate input voltage and the load current of the drive.

3) Aluminum cables are not allowed in NEC installations.

4) Aluminum cables must not be used with drives of frame size R3.

Temperature: For IEC, select a cable rated for at least 70 °C maximum permissible temperature of conductor in continuous use. For North America, power cables must be rated for 75 °C (167 °F) or higher.
For surrounding air temperatures above 40 °C (104 °F) or frame R6 with option +B056 (UL Type 12), select a cable rated for at least 90 °C (194 °F) maximum permissible temperature of conductor in continuous use.

Voltage: 600 V AC cable is accepted for up to 500 V AC.

Electrical power network specification

Voltage (U_1)	ACH580-31-xxxx-2 drives: 208…240 V AC 3-phase +10%…-15%. This is indicated in the type designation label as typical input voltage levels 3~208/230 V AC. ACH580-31-xxxx-4 drives: 380…480 V AC 3-phase +10%…-15%. This is indicated in the type designation label as typical input voltage levels 3~400/480 V AC.
Network type	Public low voltage networks. TN (grounded) and IT (ungrounded) systems. See section Grounding system compatibility check (page 97)
Rated conditional short-circuit current I_{CC} (IEC 61800-5-1)	Maximum allowable prospective short-circuit current is 65 kA when protected by the fuses given in the fuse tables.
Maximum prospective short-circuit current rating (SCCR) (UL 61800-5-1)	The drive is suitable for use on a circuit capable of delivering not more than 100,000 rms symmetrical amperes at 480 V maximum when protected by the fuses given in the fuse table.
Frequency (f_1)	47.5…63 Hz. This is indicated in the type designation label as typical input frequency F1 (50/60 Hz).
Imbalance	Max. ± 3% of nominal phase to phase input voltage
Fundamental power factor (cos phi$_1$)	1 (at nominal load)

Harmonic distortion

Harmonics are below the limits defined in IEEE 519-2014, and G5/4. The drive complies with IEC 61000-3-2, IEC 61000-3-4 and IEC 61000-3-12.

The table below shows typical values of the drive for short-circuit ratio (I_{SC}/I_1) of 20 to 100. The values will be met if the supply network voltage is not distorted by other loads and when the drive operates at nominal load.

Nominal bus voltage V at PCC	THDi (%)	THDv (%)
V ≤ 690 V	3*	< 3**

PCC — Point on a public power supply system, electrically nearest to a particular load, at which other loads are, or could be, connected. The PCC is a point located upstream of the considered installation.

THDi — Indicates the total harmonic current distortion of the wave form. This value is defined as the ratio (in %) of the harmonic current to the fundamental (non-harmonic) current measured at a load point at the particular moment when the measurement is taken:

$$THDi = \frac{\sqrt{\sum_{2}^{40} I_n^2}}{I_1} \cdot 100\%$$

THDv — Indicates the total magnitude of the voltage distortion. This value is defined as the ratio (in %) of the harmonic voltage to the fundamental (non-harmonic) voltage:

$$THDv = \frac{\sqrt{\sum_{2}^{40} U_n^2}}{U_1} \cdot 100\%$$

I_{SC}/I_1 — Short-circuit ratio

I_{SC} — Maximum short-circuit current at PCC

I_1 — Continuous rms input current of the drive

I_n — Amplitude of the current harmonic n

U_1 — Supply voltage

U_n — Amplitude of the voltage harmonic n

* The short-circuit ratio can influence the THDi value

** Other loads can influence the THDv value

Motor connection data

<table>
<tr><td>Motor types</td><td>Asynchronous AC induction motors, permanent magnet motors in open loop control, synchronous reluctance motors</td></tr>
<tr><td>Short-circuit current protection (IEC/EN 61800-5-1, UL 508C)</td><td>The drive provides solid state short circuit protection for the motor connection per IEC/EN 61800-5-1 and UL 61800-5-1.</td></tr>
<tr><td>Frequency (f_2)</td><td>0....500 Hz</td></tr>
<tr><td>Frequency resolution</td><td>0.01 Hz</td></tr>
<tr><td>Current</td><td>See section Electrical ratings (page 177).</td></tr>
<tr><td>Switching frequency</td><td>2 kHz, 4 kHz, 8 kHz, 12 kHz, (depends on the frame and parameter settings)</td></tr>
<tr><td>Maximum recommended motor cable length</td><td>

Operational functionality and motor cable length

The drive operates with optimum performance with the following maximum motor cable lengths. Longer motor cables cause a motor voltage decrease which limits the available motor power. The decrease depends on the motor cable length and characteristics. Contact ABB for more information. Note that a sine filter (optional) at the drive output also causes a voltage decrease.

Note: Conducted and radiated emissions of these motor cable lengths do not comply with EMC requirements.

<table>
<tr><th rowspan="3">Frame size</th><th colspan="4">Maximum motor cable length, 4 kHz</th></tr>
<tr><th colspan="2">Scalar control</th><th colspan="2">Vector control</th></tr>
<tr><th>m</th><th>ft</th><th>m</th><th>ft</th></tr>
<tr><td colspan="5">Standard drive, without external options</td></tr>
<tr><td>R3</td><td>200</td><td>656</td><td>200</td><td>656</td></tr>
<tr><td>R6</td><td>300</td><td>990</td><td>300</td><td>990</td></tr>
<tr><td>R8</td><td>300</td><td>990</td><td>300</td><td>990</td></tr>
</table>

Note: In multimotor systems, the calculated sum of all motor cable lengths must not exceed the maximum motor cable length given in the table.

</td></tr>
</table>

EMC compatibility and motor cable length

To comply with the European EMC Directive (standard EN 61800-3), use the following maximum motor cable lengths at 4 kHz switching frequency. See the table below.

Frame size	Maximum motor cable length, 4 kHz	
	m	ft
EMC limits for Category C2[1)] Standard drive with the integrated EMC filter. See notes 2 and 4.		
R3, R6 and R8	100	330
EMC limits for Category C3[1)] Standard drive with the integrated EMC filter. See notes 3 and 4.		
R3, R6	100	330
R8	150	492

[1)] See the terms in section Definitions (page 222).

Note 1: Radiated emissions are not compatible when measured with a standard emission measurement setup and should be checked or measured on cabinet and machine installations case by case. Radiated emissions are according to Category C2 with integrated EMC filter.

Note 2: The integrated EMC filter must be connected.

Note 3: Radiated and conducted emissions are according to category C3 with an integrated filter and these cable lengths.

Note 4: Category C2 meets requirements for connecting equipment to the public low-voltage networks.

CCU-24 control unit connection data

See chapter Control unit.

Efficiency

Efficiency at nominal power level (208/230 V drives):

Approximately 93% for frame R3

Approximately 95% for frame R6

Approximately 95.5% for frame R8

Efficiency at nominal power level (400 V and 480 V drives):

Approximately 96% for frame R3

Approximately 96.5% for frame R6

Approximately 97% for frame R8

The efficiency is not calculated according to the ecodesign standard IEC 61800-9-2.

Energy efficiency data (ecodesign)

Energy efficiency data according to IEC-61800-9-2 is available from the ecodesign tool (https://ecodesign.drivesmotors.abb.com).

Protection classes

Degrees of protection (IEC/EN 60529)	IP21 (standard) IP20 (option +P940) IP55 (option +B056)
Enclosure types (UL 50/50E)	UL Type 1 UL Open Type (option +P940) UL Type 12 (option +B056)
Overvoltage category (IEC/EN 60664-1)	III
Protective class (IEC/EN 61800-5-1)	I

Colors

Drive enclosure: RAL 9002, PMS 653 C.

Materials

Drive

Refer to Recycling instructions and environmental information ACS880-11, ACS880-31, ACH580-31 and ACQ580-31 drives (3AXD50000137671 [English]).

Package materials for small wall-mounted drives and converter modules

- Cardboard
- Molded pulp
- EPP (foam)
- PP (strapping)
- PE (plastic bag).

Package materials for large wall-mounted drives and converter modules

- Cardboard heavy duty quality with wet strength glue
- Plywood
- Wood
- PP (strapping)
- PE (VCI foil)
- Metal (fixing clamps, screws).

Package materials for options, accessories and spare parts

- Cardboard
- Kraft paper
- PP (straps)
- PE (film, bubble wrap)
- Plywood, wood (only for heavy components).

Materials vary according to the item type, size and shape. Typical package consists of a cardboard box with paper filling or bubble wrap. ESD-safe packing materials are used for printed circuit boards and similar items.

Materials of manuals

Printed product manuals are made of recyclable paper. Product manuals are available on the Internet.

Disposal

The main parts of the drive can be recycled to preserve natural resources and energy. Product parts and materials should be dismantled and separated.

Generally all metals, such as steel, aluminum, copper and its alloys, and precious metals can be recycled as material. Plastics, rubber, cardboard and other packaging material can be used in energy recovery.

Printed circuit boards and DC capacitors need selective treatment according to IEC 62635 guidelines.

To aid recycling, most plastic parts are marked with an appropriate identification code. In addition, components containing substances of very high concern (SVHCs) are listed in European Chemicals Agency's SCIP database. SCIP is the database for information on Substances of Concern In articles as such or in complex objects (Products) established under the Waste Framework Directive (2008/98/EC). For further information, contact your local ABB distributor or consult European Chemicals Agency's SCIP database to find out which SVHCs are used in the drive, and to find out where those components are located.

Contact your local ABB distributor for further information on environmental aspects. End of life treatment must follow international and national regulations.

For more information on ABB end of life services, see new.abb.com/service/end-of-lifeservices.

Applicable standards

The drive complies with the following standards. The compliance with the European Low Voltage Directive is verified according to standard EN 61800-5-1.

EN 60204-1:2006 + AI:2009 + AC:2010	Safety of machinery. Electrical equipment of machines. Part 1: General requirements. Provisions for compliance: The final assembler of the machine is responsible for installing • emergency-stop device • supply disconnecting device.
IEC/EN 60529:1981 +A1:1999 + A2: 2013	Degrees of protection provided by enclosures (IP code)
IEC 61000-3-2:2018, EN 61000-3-2:2014	Electromagnetic compatibility (EMC) – Limits for harmonic current emissions (input current < 16 A per phase)
IEC/EN 61000-3-12:2011	Electromagnetic compatibility (EMC) - Part 3-12: Limits - Limits for harmonic currents produced by equipment connected to public low-voltage systems with input current > 16 A and < 75 A per phase.

IEC 61000-3-4:1998	Limits - Limitation of emission of harmonic currents in low-voltage power supply systems for equipment with rated current greater than 16 A
IEC/EN 61800-3:2004 + A1:2012	Adjustable speed electrical power drive systems. Part 3: EMC requirements and specific test methods
IEC/EN 61800-5-1:2007 +AMD1:2016 [1)]	Adjustable speed electrical power drive systems. Part 5-1: Safety requirements – electrical, thermal and energy
IEC 61800-9-2: 2017[1)]	Adjustable speed electrical power drive systems – Part 9-2: Ecodesign for power drive systems, motor starters, power electronics and their driven applications – Energy efficiency indicators for power drive systems and motor starters
UL 61800-5-1: First edition	Standard for Adjustable Speed Electrical Power Drive Systems - Part 5-1: Safety Requirements -Electrical, Thermal and Energy
IEC/EN 60664-1:2007	Insulation coordination for equipment within low-voltage systems. Part 1: Principles, requirements and tests.
NEMA 250:2014	Enclosures for Electrical Equipment (1000 Volts Maximum)
CSA C22.2 No. 274-17	Adjustable speed drives

[1)] The 208/230 V drives do not comply with the standard.

Ambient conditions

Environmental limits for the drive are given below. The drive is to be used in a heated, indoor, controlled environment. All printed circuit boards are conformal coated.

	Operation installed for stationary use	**Storage in the package**	**Transportation in the package**
Installation site altitude	• 0 to 4000 m (13123 ft) above sea level [1)] • 0 to 2000 m (6561 ft) above sea level [2)] Output derated above 1000 m (3281 ft), see Altitude derating (page 183).	-	-

	Operation installed for stationary use	Storage in the package	Transportation in the package
Surrounding air temperature	-15 to +50 °C (5 to 122 °F). No frost allowed. See Deratings (page 181).	-40 to +70 °C (-40 to +158 °F)	-40 to +70 °C (-40 to +158 °F)
Relative humidity	5 to 95%	Max. 95%	Max. 95%
	No condensation allowed. Maximum allowed relative humidity is 60% in the presence of corrosive gases.		
Contamination levels (IEC 60721-3-x)	IEC 60721-3-3: 2002	IEC 60721-3-1: 1997	IEC 60721-3-2: 1997
Chemical gases	Class 3C2	Class 1C2	Class 2C2
Solid particles	Class 3S2. No conductive dust allowed.	Class 1S3 (packing must support this, otherwise 1S2)	Class 2S2
Pollution degree (IEC/EN 60664-1)	2	-	-
Atmospheric pressure	70 to 106 kPa 0.7 to 1.05 atmospheres	70 to 106 kPa 0.7 to 1.05 atmospheres	60 to 106 kPa 0.6 to 1.05 atmospheres
Vibration (IEC 60068-2:6)	10...150 Hz Amplitude ±0.075 mm, 10...57.56 Hz Constant peak acceleration 10 m/s² (1 gn), 57.56...150 Hz	-	-
Vibration (ISTA)	-	R3: Displacement, 25 mm peak to peak, 14200 vibratory impacts R6, R8 ISTA 3E): Random, overall Grms level of 0.54	
Shock/Drop (ISTA)	Not allowed	R3 (ISTA 1A): Drop, 6 faces, 3 edges and 1 corner, 460 mm (18.1 in) R6, R8 (ISTA 3E): Shock, incline impact: 1.2 m/s (3.94 ft/s) Shock, rotational edge drop: 230 mm (9.1 in)	

1) For neutral-grounded TN and TT systems and non-corner grounded IT systems.
2) For corner-grounded TN, TT and IT systems.

Storage conditions

Store the drive in humidity controlled enclosed environments. Keep the drive in its package.

Markings

The applicable markings are shown on the type designation label of the drive.

CE	CE mark Product complies with the applicable European Union legislation. For fulfilling the EMC requirements, see the additional information concerning the drive EMC compliance (IEC/EN 61800-3).
BTL	BTL (BACnet Testing Laboratories) mark Product has BACnet conformance certificate.
TÜV Safety Approved	TÜV Safety Approved mark (functional safety) Product contains Safe torque off and possibly other (optional) safety functions which are certified by TÜV according to the relevant functional safety standards. Applicable to drives and inverters; not applicable to supply, brake or DC/DC converter units or modules.
UKCA	UKCA (UK Conformity Assessed) mark Product complies with the applicable United Kingdom's legislation (Statutory Instruments). Marking is required for products being placed on the market in Great Britain (England, Wales and Scotland).
c UL us LISTED	UL Listed mark for USA and Canada Product has been tested and evaluated against the relevant North American standards by the Underwriters Laboratories. Valid with rated voltages up to 600 V.
RCM	RCM mark Product complies with Australian and New Zealand requirements specific to EMC, telecommunications and electrical safety. For fulfilling the EMC requirements, see the additional information concerning the drive EMC compliance (IEC/EN 61800-3).
EAC	EAC (Eurasian Conformity) mark Product complies with the technical regulations of the Eurasian Customs Union. EAC mark is required in Russia, Belarus and Kazakhstan.

	KC mark Product complies with Korean Registration of Broadcasting and Communications Equipment Clause 3, Article 58-2 of Radio Waves Act.

	Electronic Information Products (EIP) symbol including an Environment Friendly Use Period (EFUP). Product is compliant with the People's Republic of China Electronic Industry Standard (SJ/T 11364-2014) about hazardous substances. The EFUP is 20 years. China RoHS II Declaration of Conformity is available from https://library.abb.com.

	WEEE mark At the end of life the product should enter the recycling system at an appropriate collection point and not placed in the normal waste stream.

Compliance with the EN 61800-3:204 + A1:2012

Definitions

EMC stands for Electromagnetic Compatibility. It is the ability of electrical/electronic equipment to operate without problems within an electromagnetic environment. Likewise, the equipment must not disturb or interfere with any other product or system within its locality.

First environment includes establishments connected to a low-voltage network which supplies buildings used for domestic purposes.

Second environment includes establishments connected to a network not supplying domestic premises.

Drive of category C1: drive of rated voltage less than 1000 V and intended for use in the first environment.

Drive of category C2: drive of rated voltage less than 1000 V and intended to be installed and started up only by a professional when used in the first environment.

Note: A professional is a person or organization having necessary skills in installing and/or starting up power drive systems, including their EMC aspects.

Drive of category C3: drive of rated voltage less than 1000 V and intended for use in the second environment and not intended for use in the first environment.

Drive of category C4: drive of rated voltage equal to or above 1000 V, or rated current equal to or above 400 A, or intended for use in complex systems in the second environment.

Category C2

The emission limits are complied with the following provisions:

1. The motor and control cables are selected as specified in this manual.
2. The drive is installed according to the instructions given in this manual.
3. For the maximum motor cable length with 4 kHz switching frequency, see section Motor connection data (page 214).

All frames are equipped with integrated C2 EMC filter as standard.

WARNING! The drive may cause radio interference if used in residential or domestic environment. The user is required to take measures to prevent interference, in association to the requirements for the CE compliance listed above, if necessary.

Note: Note: Do not install a drive with the internal EMC filter connected to a system that the filter is not suitable for. This can cause danger, or damage the drive.

Note: Do not install a drive with the ground-to-phase varistor connected to a system that the varistor is not suitable for. If you do, the varistor circuit can be damaged.
If you install the drive to any other system than symmetrically grounded TN-S system, you may need to disconnect the EMC filter or the ground-to-phase varistor. See Grounding system compatibility check (page 97).

Category C3

The drive complies with the standard with the following provisions:

- The motor and control cables are selected as specified in this manual.
- The drive is installed according to the instructions given in this manual.
- For the maximum motor cable length with 4 kHz switching frequency, see section Motor connection data (page 214).

WARNING! A drive of category C3 is not intended to be used on a low-voltage public network which supplies domestic premises. Radio frequency interference is expected if the drive is used on such a network.

Note: Do not install a drive with the integrated EMC filter connected to a system that the filter is not suitable for. This can cause danger, or damage the drive.

Note: Do not install a drive with the ground-to-phase varistor connected to a system that the varistor is not suitable for. If you do, the varistor circuit can be damaged.

Category C4

The drive complies with the C4 category with these provisions:

1. It is made sure that no excessive emission is propagated to neighboring low-voltage networks. In some cases, the natural suppression in transformers and cables is sufficient. If in doubt, a supply transformer with static screening between the primary and secondary windings can be used.

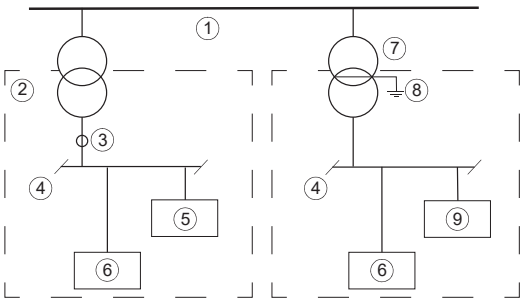

1	Medium voltage network	6	Equipment
2	Neighboring network	7	Supply transformer
3	Point of measurement	8	Static screen
4	Low voltage	9	Drive
5	Equipment (victim)	-	-

2. An EMC plan for preventing disturbances is drawn up for the installation. A template is available in Technical guide No. 3 EMC compliant installation and configuration for a power drive system (3AFE61348280 [English]).
3. The motor and control cables are selected, and routed according to the electrical planning guidelines of the drive. The EMC recommendations are obeyed.
4. The drive is installed according to its installation instructions. The EMC recommendations are obeyed.

WARNING!
A drive of category C4 is not intended to be used on a low-voltage public network which supplies domestic premises. Radio frequency interference is expected if the drive is used on such a network.

UL checklist

WARNING!
Operation of this drive requires detailed installation and operation instructions provided in the hardware and software manuals. The manuals are provided in electronic format in the drive package or on the Internet. Keep the manuals with the drive at all times. Hard copies of the manuals can be ordered through the manufacturer.

- Make sure that the drive type designation label includes the applicable marking.
- **DANGER - Risk of electric shock.** After disconnecting the input power, always wait for 5 minutes to let the intermediate circuit capacitors discharge before you start working on the drive, motor or motor cable.
- The drive is to be used in a heated, indoor controlled environment. The drive must be installed in clean air according to the enclosure classification. Cooling air must be clean, free from corrosive materials and electrically conductive dust.
- The maximum surrounding air temperature is 40 °C at rated output current. The output current is derated for 40…50 °C.
- The drive is suitable for use in a circuit capable of delivering not more than 100 kA rms symmetrical amperes, 480 V maximum when protected by the UL fuses given elsewhere in this chapter. The ampere rating is based on tests done according to the appropriate UL standard.
- The cables located within the motor circuit must be rated for at least 75 °C in UL-compliant installations.
- The input cable must be protected with fuses or circuit breakers. These protective devices provide branch circuit protection in accordance with the national regulations (National Electrical Code (NEC) or Canadian Electrical Code). Obey also any other applicable local or provincial codes.

  WARNING!
  The opening of the branch-circuit protective device may be an indication that a fault current has been interrupted. To reduce the risk of fire or electric shock, current-carrying parts and other components of the device should be examined and replaced if damaged.

- The integral solid state short circuit protection of the drive does not provide branch circuit protection. Branch circuit protection must be provided in accordance with the National Electrical Code and any additional local codes.
- The drive provides motor overload protection. For adjustments, see the firmware manual.
- The drive overvoltage category according to IEC 60664-1 is III.
- To maintain the environment integrity of the enclosure, replace the cable grommets with field-installed industrial conduit hubs or closure plates required by the enclosure type (or better).

Declarations of conformity

You can find declarations of conformity in PDF format on the Internet at www.abb.com/drives/documents. For EU and UK declarations of conformity, see chapter The Safe torque off function (page 237).

Design lifetime expectancy

The design lifetime expectancy of the drive and its overall components exceeds ten (10) years in normal operating environments. In some cases, the drive can last 20 years or more. To achieve a long lifetime for the product the manufacturer's instructions for sizing the drive, installation, operational conditions and preventive maintenance schedule shall be followed.

Disclaimers

Generic disclaimer

The manufacturer shall have no obligation with respect to any product which (i) has been improperly repaired or altered; (ii) has been subjected to misuse, negligence or accident; (iii) has been used in a manner contrary to the manufacturer's instructions; or (iv) has failed as a result of ordinary wear and tear.

Cyber security disclaimer

This product is designed to be connected to and to communicate information and data via a network interface. It is Customer's sole responsibility to provide and continuously ensure a secure connection between the product and Customer network or any other network (as the case may be). Customer shall establish and maintain any appropriate measures (such as but not limited to the installation of firewalls, application of authentication measures, encryption of data, installation of anti-virus programs, etc.) to protect the product, the network, its system and the interface against any kind of security breaches, unauthorized access, interference, intrusion, leakage and/or theft of data or information.

ABB and its affiliates are not liable for damages and/or losses related to such security breaches, any unauthorized access, interference, intrusion, leakage and/or theft of data or information.

13

Dimension drawings

This chapter shows the dimension drawings of the drive. The dimensions are given in millimeters and [inches].

For dimension drawings of option +P940, refer to ACS580…, ACH580… and ACQ580…+P940 and +P944 drive modules supplement (3AXD50000210305 [English]).

R3, IP21 (UL Type 1)

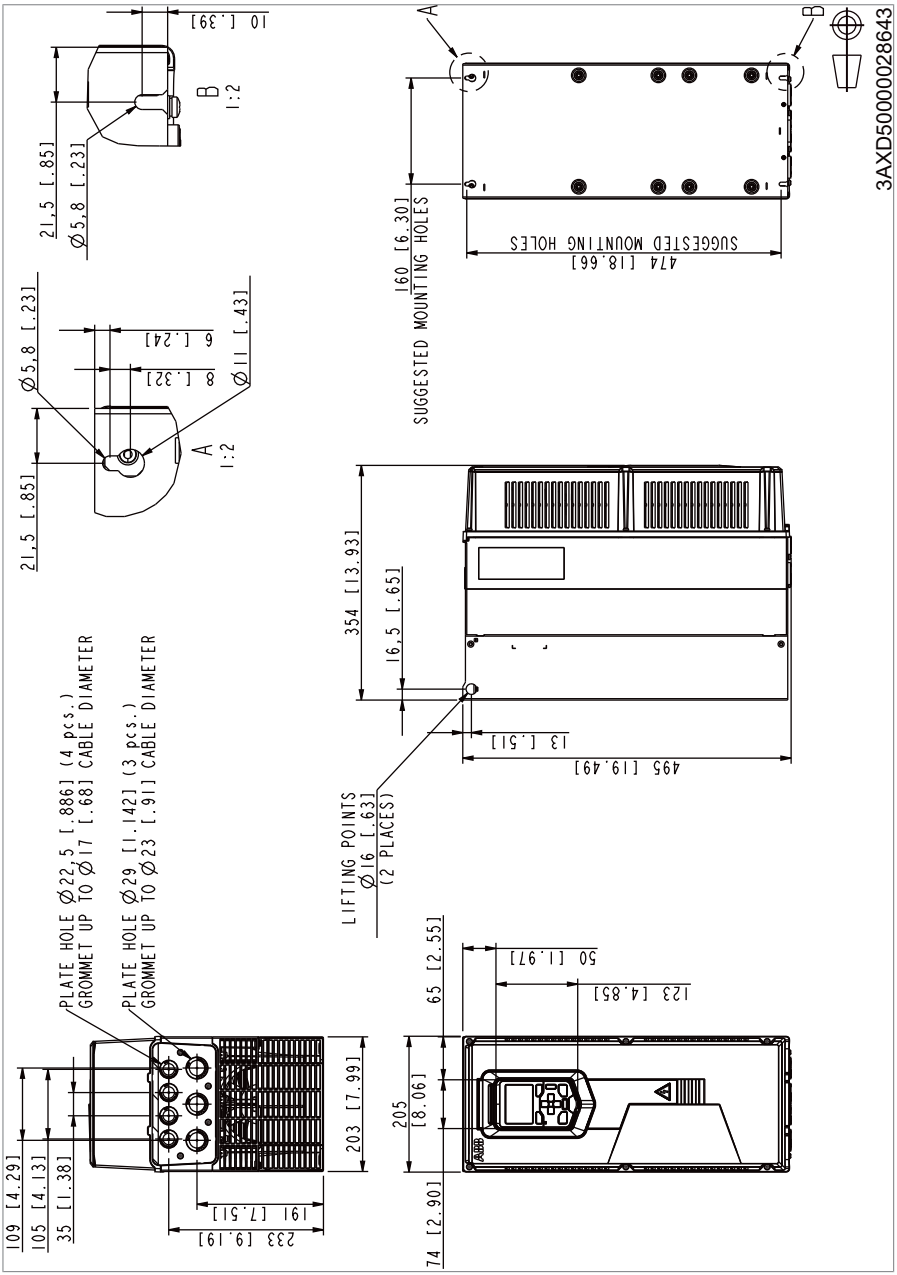

R3 – Option +B056 (IP55, UL Type 12)

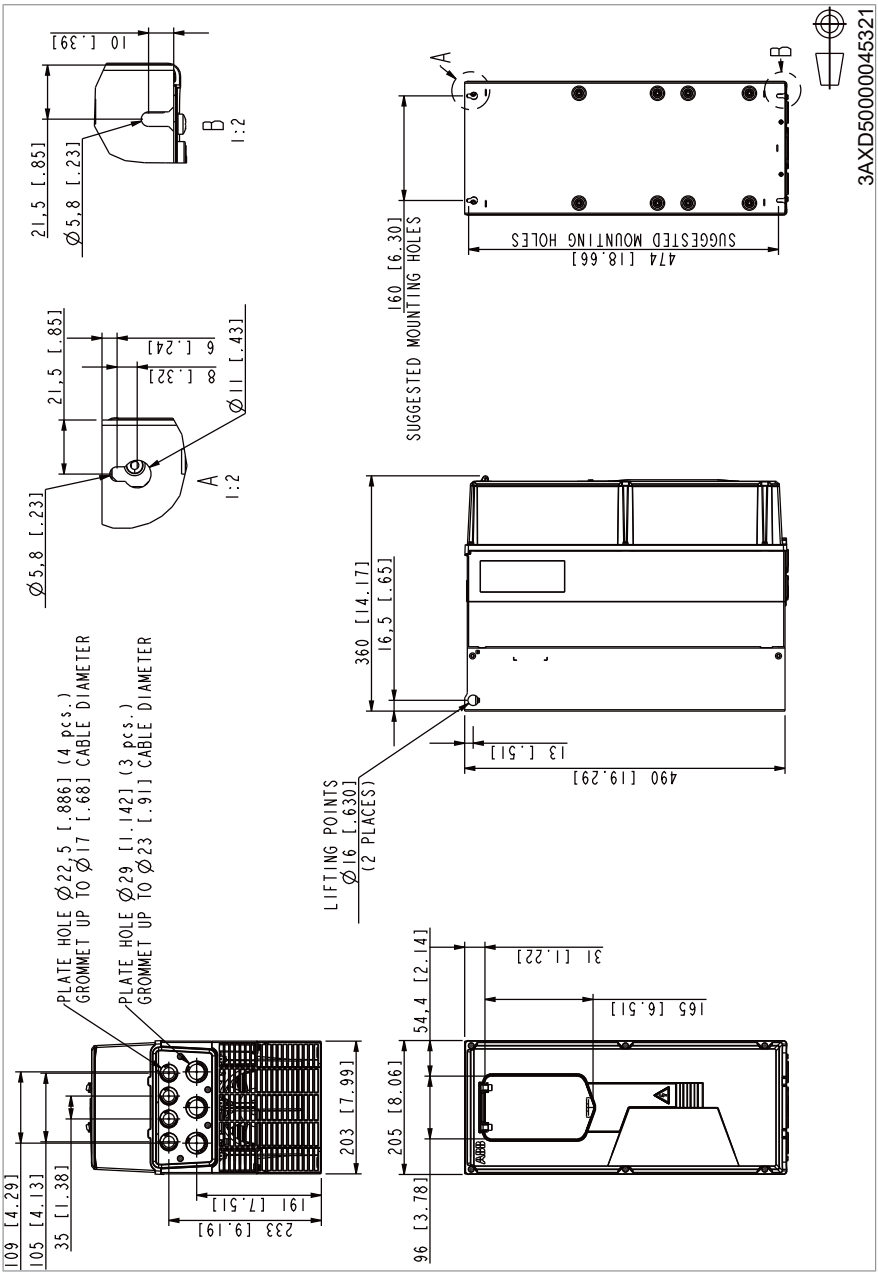

R6, IP21 (UL Type 1)

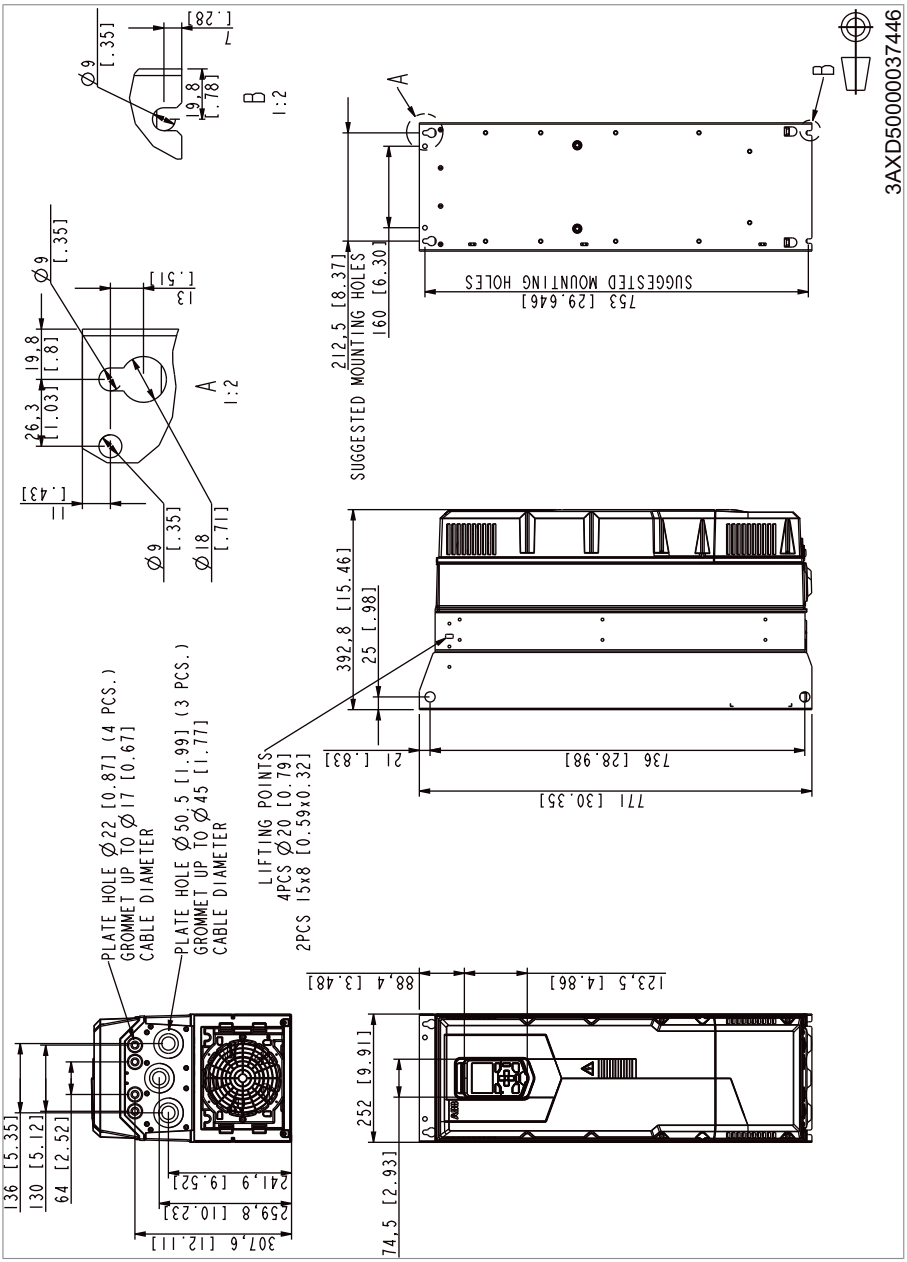

R6 – Option +B056 (IP55, UL Type 12)

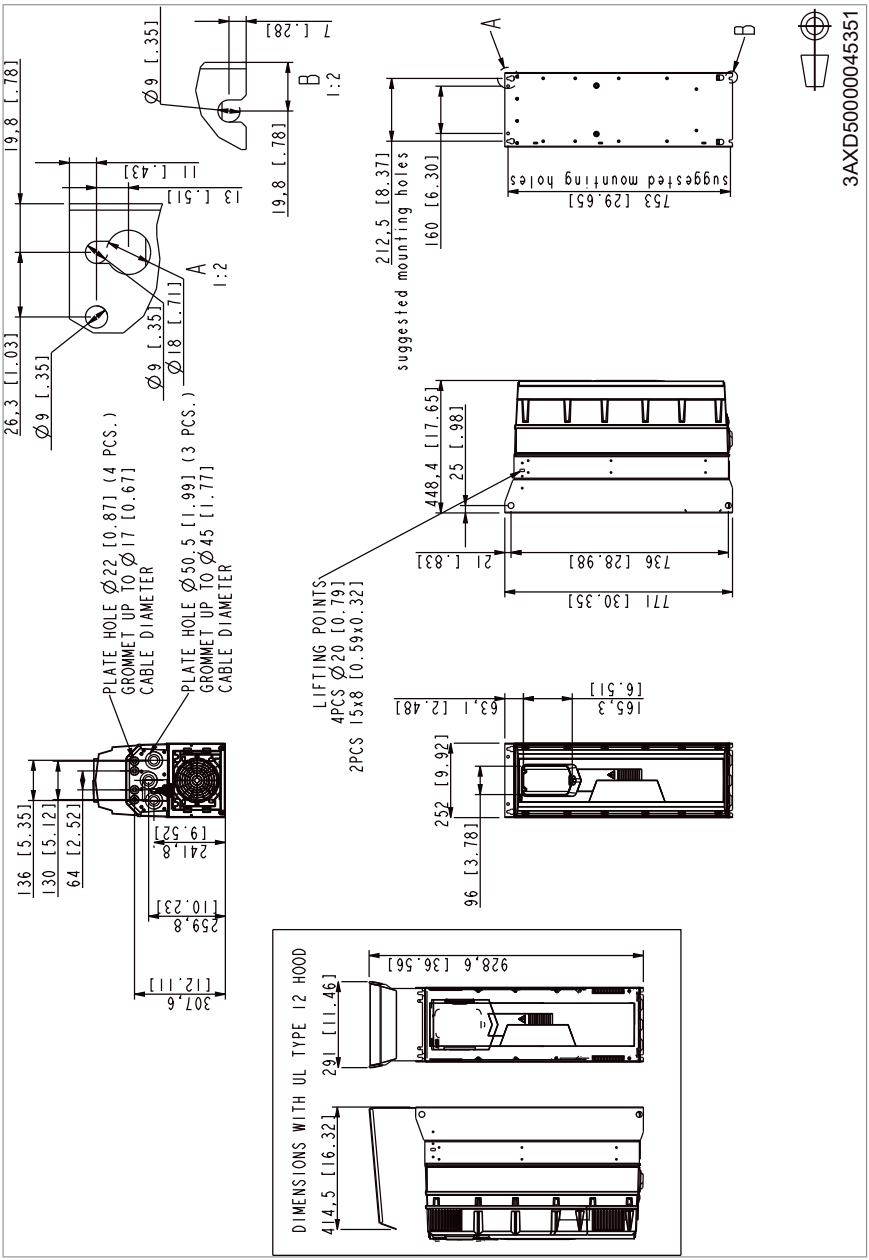

R8, IP21 (UL Type 1)

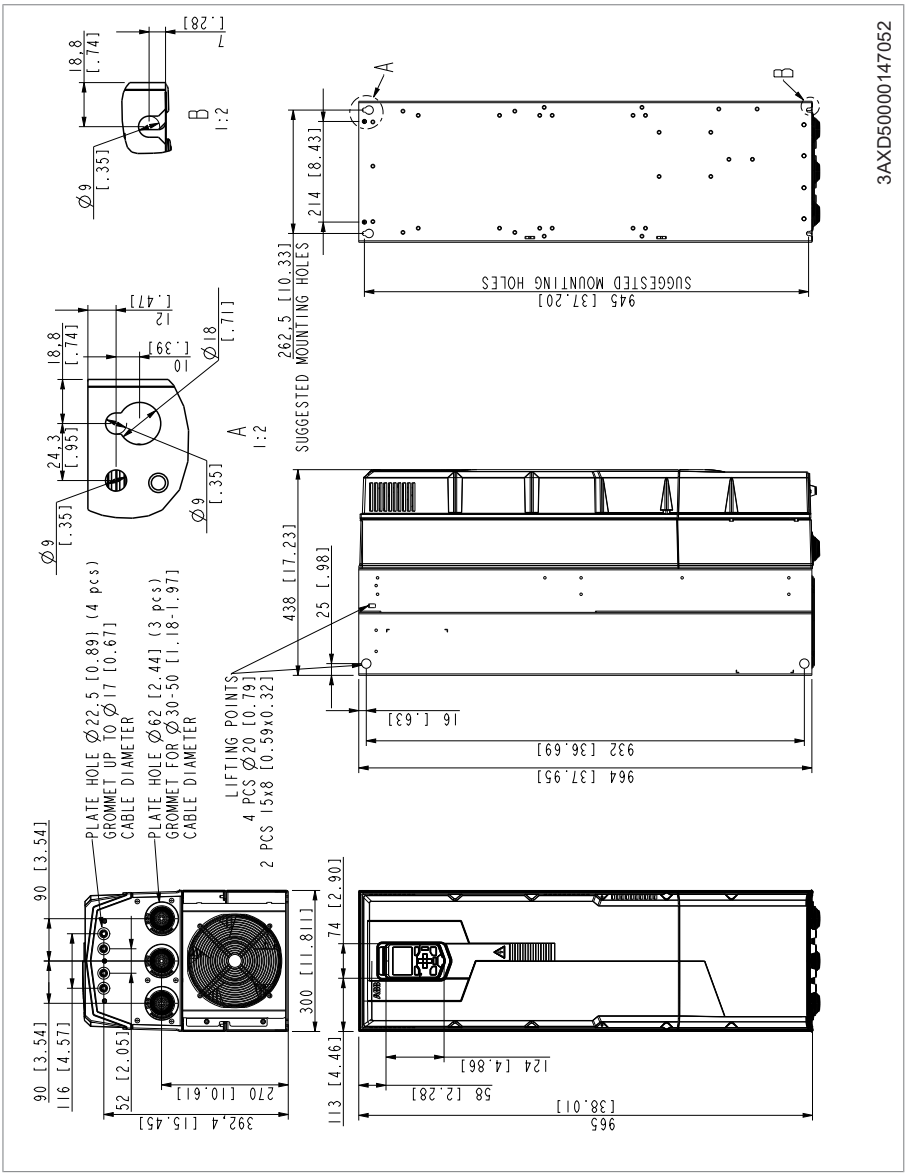

R8 – Option +B056 (IP55, UL Type 12)

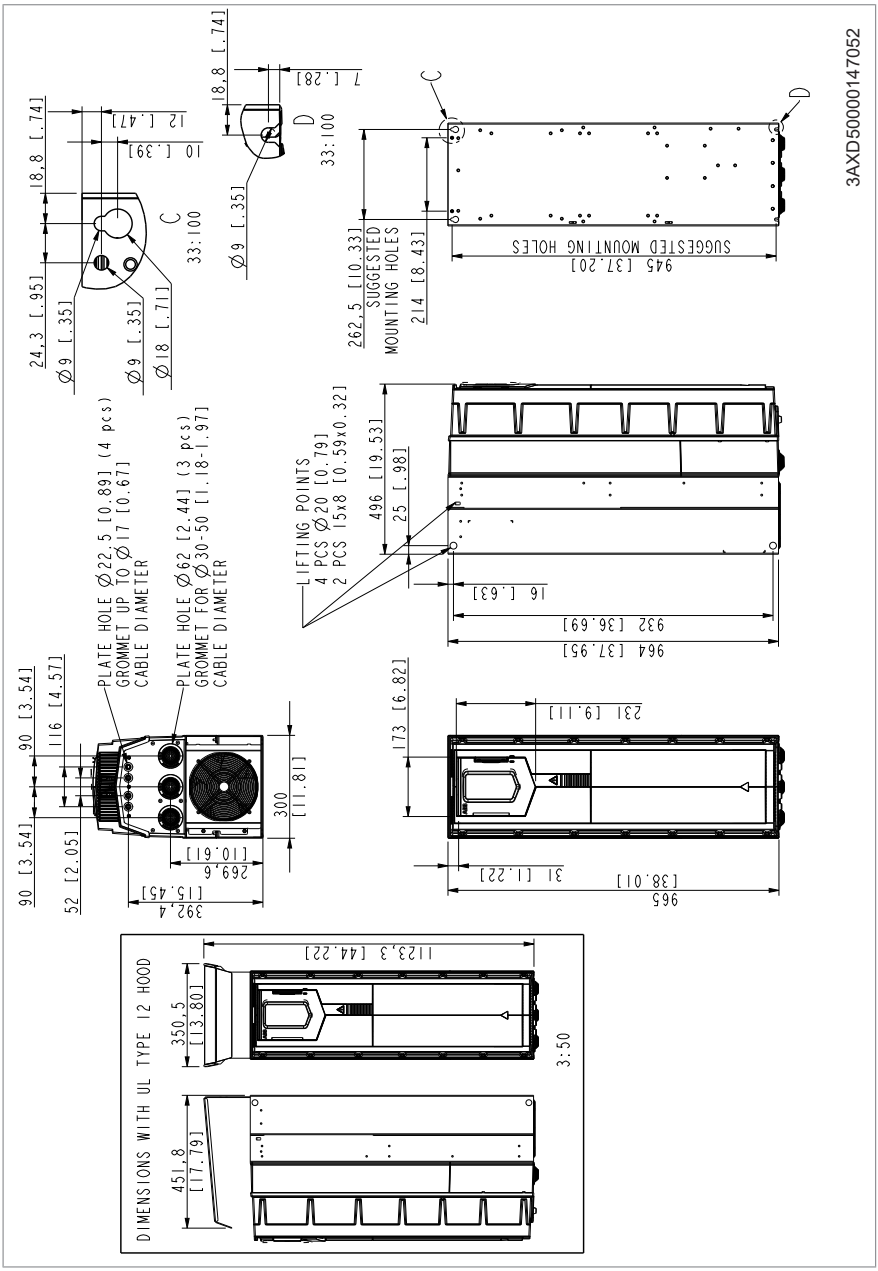

14

The Safe torque off function

Contents of this chapter

This chapter describes the Safe torque off (STO) function of the drive and gives instructions for its use.

Description

The Safe torque off function can be used, for example, as the final actuator device of safety circuits (such as an emergency stop circuit) that stop the drive in case of danger. Another typical application is a prevention of unexpected start-up function that enables short-time maintenance operations like cleaning or work on non-electrical parts of the machinery without switching off the power supply to the drive.

When activated, the Safe torque off function disables the control voltage for the power semiconductors of the drive output stage, thus preventing the drive from generating the torque required to rotate the motor. If the motor is running when Safe torque off is activated, it coasts to a stop.

The Safe torque off function has a redundant architecture, that is, both channels must be used in the safety function implementation. The safety data given in this manual is calculated for redundant use, and does not apply if both channels are not used.

The Safe torque off function complies with these standards:

Standard	Name
IEC 60204-1:2021 EN 60204-1:2018	Safety of machinery – Electrical equipment of machines – Part 1: General requirements
IEC 61000-6-7:2014	Electromagnetic compatibility (EMC) – Part 6-7: Generic standards – Immunity requirements for equipment intended to perform functions in a safety-related system (functional safety) in industrial locations
IEC 61326-3-1:2017	Electrical equipment for measurement, control and laboratory use – EMC requirements – Part 3-1: Immunity requirements for safety-related systems and for equipment intended to perform safety-related functions (functional safety) – General industrial applications
IEC 61508-1:2010	Functional safety of electrical/electronic/programmable electronic safety-related systems – Part 1: General requirements
IEC 61508-2:2010	Functional safety of electrical/electronic/programmable electronic safety-related systems – Part 2: Requirements for electrical/electronic/programmable electronic safety-related systems
IEC 61511-1:2017	Functional safety – Safety instrumented systems for the process industry sector
IEC 61800-5-2:2016 EN 61800-5-2:2007	Adjustable speed electrical power drive systems – Part 5-2: Safety requirements – Functional
EN IEC 62061:2021	Safety of machinery – Functional safety of safety-related control systems
EN ISO 13849-1:2015	Safety of machinery – Safety-related parts of control systems – Part 1: General principles for design
EN ISO 13849-2:2012	Safety of machinery – Safety-related parts of control systems – Part 2: Validation

The function also corresponds to Prevention of unexpected start-up as specified by EN ISO 14118:2018 (ISO 14118:2017), and Uncontrolled stop (stop category 0) as specified in EN/IEC 60204-1.

Compliance with the European Machinery Directive and the UK Supply of Machinery (Safety) Regulations

The Declarations of conformity are shown at the end of this chapter.

Wiring

For the electrical specifications of the STO connection, see the technical data of the control unit.

Connection principle

Single ACH580-31 drive, internal power supply

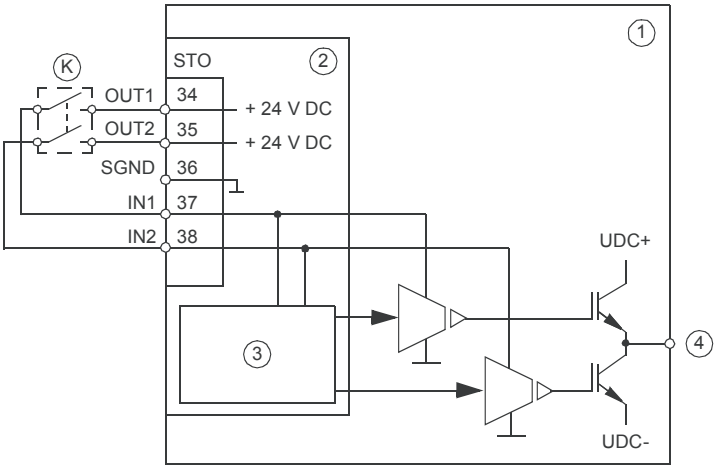

1	Drive
2	Control unit
3	Control logic
4	To motor
K	Activation switch

Single ACH580-31 drive, external power supply

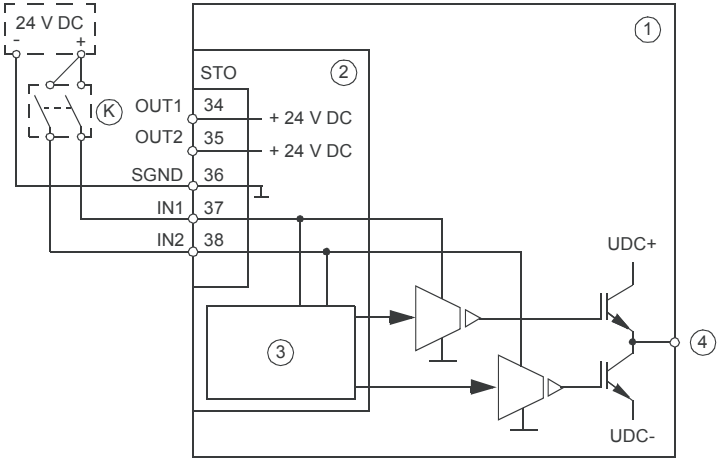

1	Drive
2	Control unit
3	Control logic
4	To motor
K	Activation switch

Wiring examples

Single ACH580-31 drive, internal power supply

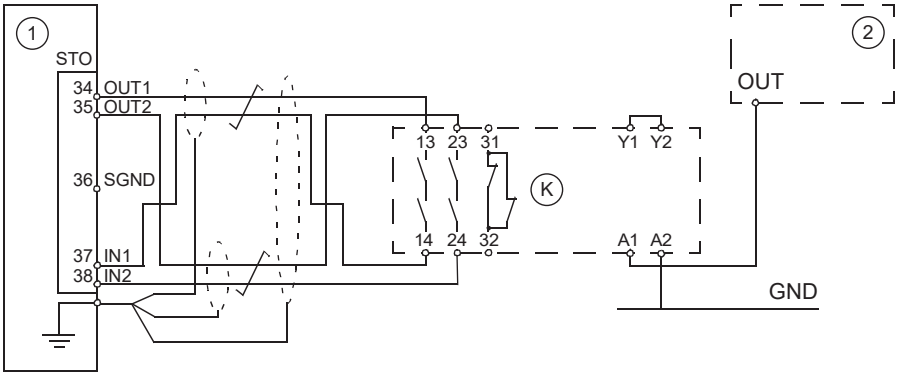

1	Drive

2	Safety PLC
K	Safety relay

Single ACH580-31 drive, external power supply

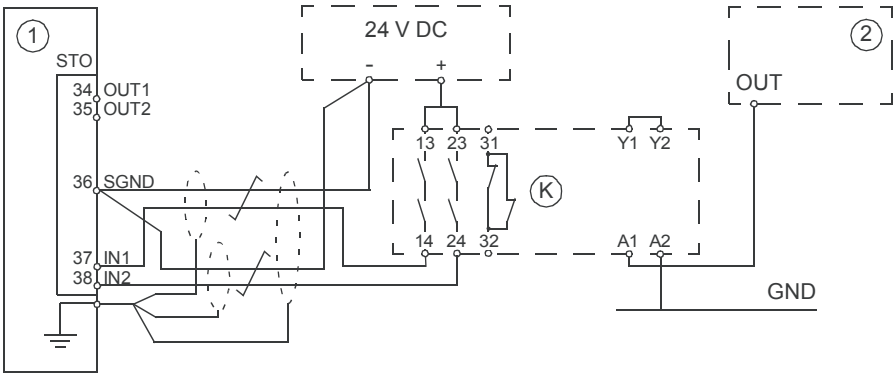

1	Drive
2	Safety PLC
K	Safety relay

Multiple ACH580-31 drives, internal power supply

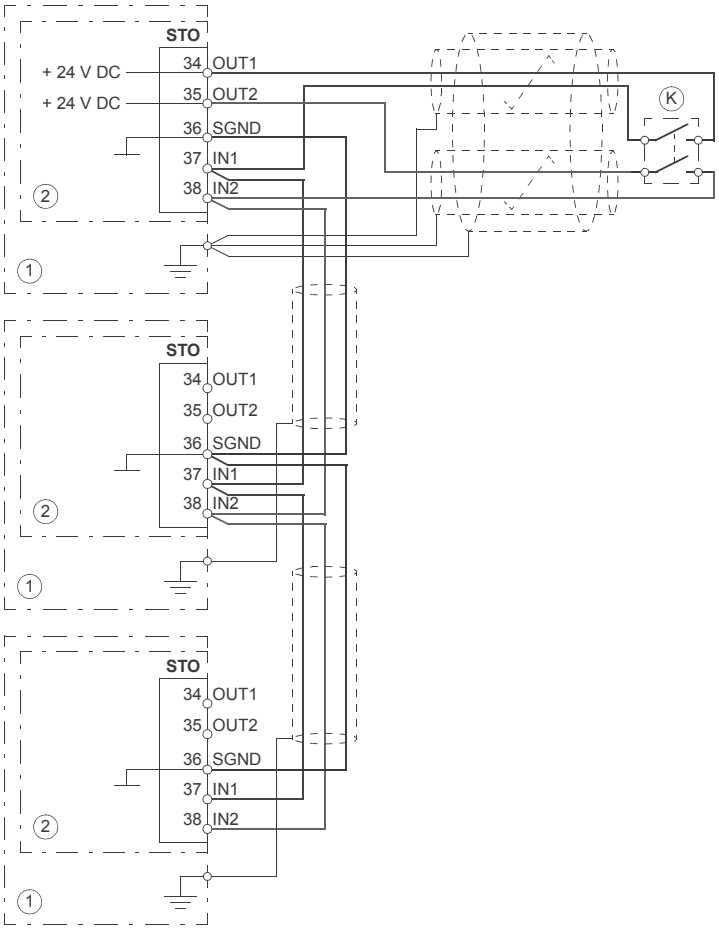

1	Drive
2	Control unit
K	Activation switch

Multiple ACH580-31 drives, external power supply

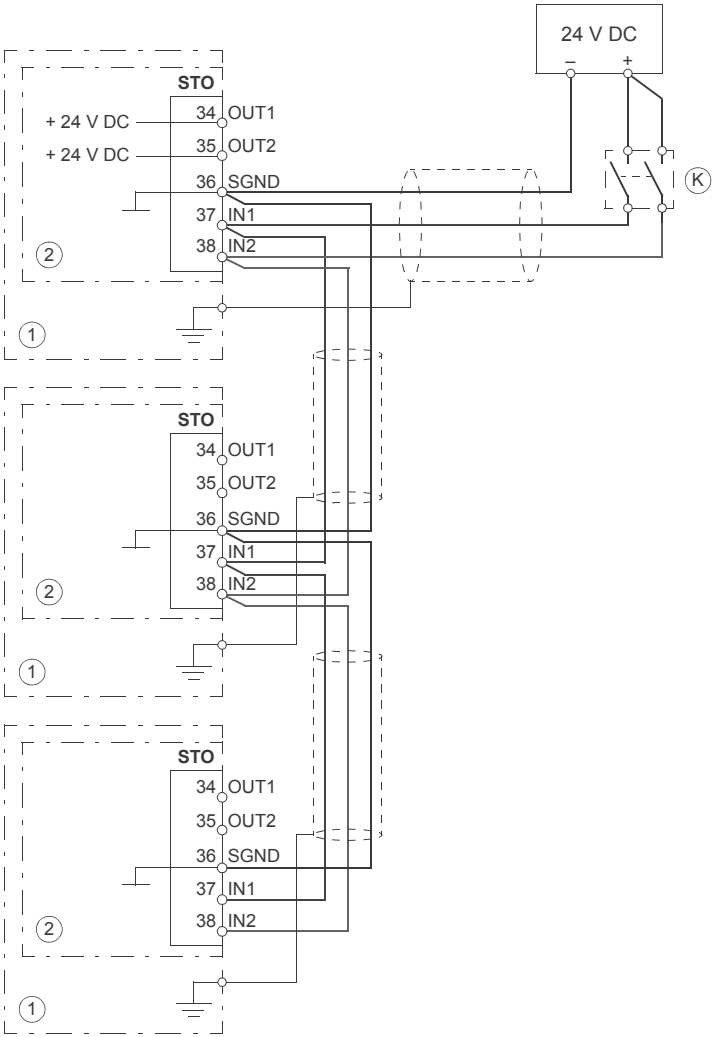

1	Drive
2	Control unit
K	Activation switch

Activation switch

In the wiring diagrams, the activation switch has the designation [K]. This represents a component such as a manually operated switch, an emergency stop push button switch, or the contacts of a safety relay or safety PLC.

- In case a manually operated activation switch is used, the switch must be of a type that can be locked out to the open position.
- The contacts of the switch or relay must open/close within 200 ms of each other.
- A CPTC thermistor protection module or an FSPS safety functions module can also be used. For more information, see the module documentation.

Cable types and lengths

- ABB recommends double-shielded twisted-pair cable.
- Maximum cable lengths:
  - 300 m (1000 ft) between activation switch [K] and drive control unit
  - 60 m (200 ft) between multiple drives
  - 60 m (200 ft) between external power supply and first control unit

Note: A short-circuit in the wiring between the switch and an STO terminal causes a dangerous fault. Therefore, it is recommended to use a safety relay (including wiring diagnostics) or a wiring method (shield grounding, channel separation) which reduces or eliminates the risk caused by the short-circuit.

Note: The voltage at the STO input terminals of the drive must be at least 13 V DC to be interpreted as “1”.

The pulse tolerance of the input channels is 1 ms.

Grounding of protective shields

- Ground the shield in the cabling between the activation switch and the control unit at the control unit only.
- Ground the shield in the cabling between two control units at one control unit only.

Operation principle

1. The Safe torque off activates (the activation switch is opened, or safety relay contacts open).
2. The STO inputs of the drive control unit de-energize.
3. The control unit cuts off the control voltage from the output IGBTs.
4. The control program generates an indication as defined by parameter 31.22 (see the firmware manual of the drive).

   The parameter selects which indications are given when one or both STO signals are switched off or lost. The indications also depend on whether the drive is running or stopped when this occurs.

   Note: This parameter does not affect the operation of the STO function itself. The STO function will operate regardless of the setting of this parameter: a running drive will stop upon removal of one or both STO signals, and will not start until both STO signals are restored and all faults reset.

   Note: The loss of only one STO signal always generates a fault as it is interpreted as a malfunction of STO hardware or wiring.
5. The motor coasts to a stop (if running). The drive cannot restart while the activation switch or safety relay contacts are open. After the contacts close, a reset may be needed (depending on the setting of parameter 31.22). A new start command is required to start the drive.

Start-up including validation test

To ensure the safe operation of a safety function, validation is required. The final assembler of the machine must validate the function by performing a validation test. The test must be performed

1. at initial start-up of the safety function
2. after any changes related to the safety function (circuit boards, wiring, components, settings, replacement of inverter module, etc.)
3. after any maintenance work related to the safety function
4. after a drive firmware update
5. at the proof test of the safety function.

Competence

The validation test of the safety function must be carried out by a competent person with adequate expertise and knowledge of the safety function as well as functional safety, as required by IEC 61508-1 clause 6. The test procedures and report must be documented and signed by this person.

Validation test reports

Signed validation test reports must be stored in the logbook of the machine. The report shall include documentation of start-up activities and test results, references to failure reports and resolution of failures. Any new validation tests performed due to changes or maintenance shall be logged into the logbook.

Validation test procedure

After wiring the Safe torque off function, validate its operation as follows.

Note: If a CPTC-02 or an FSPS-21 module is installed, refer to its documentation.

Action	☑
WARNING! Obey the safety instructions. If you ignore them, injury or death, or damage to the equipment can occur.	☐
Make sure that the motor can be run and stopped freely during start-up.	☐
Stop the drive (if running), switch the input power off and isolate the drive from the power line using a disconnector.	☐
Check the STO circuit connections against the wiring diagram.	☐

Action	☑
Close the disconnector and switch the power on.	☐
Test the operation of the STO function when the motor is stopped. • Give a stop command for the drive (if running) and wait until the motor shaft is at a standstill. Make sure that the drive operates as follows: • Open the STO circuit. The drive generates an indication if one is defined for the 'stopped' state in parameter 31.22 (see the firmware manual). • Give a start command to verify that the STO function blocks the drive's operation. The motor should not start. • Close the STO circuit. • Reset any active faults. Restart the drive and check that the motor runs normally.	☐
Test the operation of the STO function when the motor is running. • Start the drive and make sure the motor is running. • Open the STO circuit. The motor should stop. The drive generates an indication if one is defined for the 'running' state in parameter 31.22 (see the firmware manual). • Reset any active faults and try to start the drive. • Make sure that the motor stays at a standstill and the drive operates as described above in testing the operation when the motor is stopped. • Close the STO circuit. • Reset any active faults. Restart the drive and check that the motor runs normally.	☐
Test the operation of the failure detection of the drive. The motor can be stopped or running. • Open the 1st input channel of the STO circuit. If the motor was running, it should coast to a stop. The drive generates an FA81 fault indication (see the firmware manual). • Give a start command to verify that the STO function blocks the drive's operation. The motor should not start. • Open the STO circuit (both channels). • Give a reset command. • Close the STO circuit (both channels). • Reset any active faults. Restart the drive and check that the motor runs normally. • Open the 2nd input channel of the STO circuit. If the motor was running, it should coast to a stop. The drive generates an FA82 fault indication (see the firmware manual). • Give a start command to verify that the STO function blocks the drive's operation. The motor should not start. • Open the STO circuit (both channels). • Give a reset command. • Close the STO circuit (both channels). • Reset any active faults. Restart the drive and check that the motor runs normally.	☐
Document and sign the validation test report which verifies that the safety function is safe and accepted for operation.	☐

Use

1. Open the activation switch, or activate the safety functionality that is wired to the STO connection.
2. The STO inputs on the drive control unit de-energize, and the control unit cuts off the control voltage from the output IGBTs.
3. The control program generates an indication as defined by parameter 31.22 (see the firmware manual of the drive).
4. The motor coasts to a stop (if running). The drive will not restart while the activation switch or safety relay contacts are open.
5. Deactivate the STO by closing the activation switch, or resetting the safety functionality that is wired to the STO connection.
6. Reset any faults before restarting.

WARNING!
The Safe torque off function does not disconnect the voltage of the main and auxiliary circuits from the drive. Therefore maintenance work on electrical parts of the drive or the motor can only be carried out after isolating the drive from the supply and all other voltage sources.

WARNING!
The drive cannot detect or memorize any changes in the STO circuitry when the drive control unit is not powered or when the main power to the drive is off. If both STO circuits are closed and a level-type start signal is active when the power is restored, it is possible that the drive starts without a fresh start command. Take this into account in the risk assessment of the system.

This is also valid when the drive is only powered by a CMOD-xx multifunction extension module.

WARNING!
Permanent magnet or synchronous reluctance [SynRM] motors only:

In case of a multiple IGBT power semiconductor failure, the drive can produce an alignment torque which maximally rotates the motor shaft by 180/*p* degrees (with permanent magnet motors) or 180/2*p* degrees (with synchronous reluctance [SynRM] motors) regardless of the activation of the Safe torque off function. *p* denotes the number of pole pairs.

Notes:

- If a running drive is stopped by using the Safe torque off function, the drive will cut off the motor supply voltage and the motor will coast to a stop. If this

causes danger or is not otherwise acceptable, stop the drive and machinery using the appropriate stop mode before activating the Safe torque off function.

- The Safe torque off function overrides all other functions of the drive.
- The Safe torque off function is ineffective against deliberate sabotage or misuse.
- The Safe torque off function has been designed to reduce the recognized hazardous conditions. In spite of this, it is not always possible to eliminate all potential hazards. The assembler of the machine must inform the final user about the residual risks.

Maintenance

After the operation of the circuit is validated at start-up, the STO function shall be maintained by periodic proof testing. In high demand mode of operation, the maximum proof test interval is 20 years. In low demand mode of operation, the maximum proof test interval is 10 years; see section Safety data (page 252). It is assumed that all dangerous failures of the STO circuit are detected by the proof test. To perform the proof test, do the Validation test procedure (page 246).

Note: See also the Recommendation of Use CNB/M/11.050 (published by the European co-ordination of Notified Bodies) concerning dual-channel safety-related systems with electromechanical outputs:

- When the safety integrity requirement for the safety function is SIL 3 or PL e (cat. 3 or 4), the proof test for the function must be performed at least every month.
- When the safety integrity requirement for the safety function is SIL 2 (HFT = 1) or PL d (cat. 3), the proof test for the function must be performed at least every 12 months.

The STO function of the drive does not contain any electromechanical components.

In addition to proof testing, it is a good practice to check the operation of the function when other maintenance procedures are carried out on the machinery.

Include the Safe torque off operation test described above in the routine maintenance program of the machinery that the drive runs.

If any wiring or component change is needed after start-up, or the parameters are restored, do the test given in section Validation test procedure (page 246).

Use only spare parts approved by ABB.

Record all maintenance and proof test activities in the machine logbook.

Competence

The maintenance and proof test activities of the safety function must be carried out by a competent person with adequate expertise and knowledge of the safety function as well as functional safety, as required by IEC 61508-1 clause 6.

Fault tracing

The indications given during the normal operation of the Safe torque off function are selected by drive control program parameter 31.22.

The diagnostics of the Safe torque off function cross-compare the status of the two STO channels. In case the channels are not in the same state, a fault reaction function is performed and the drive trips on an FA81 or FA82 fault. An attempt to use the STO in a non-redundant manner, for example activating only one channel, will trigger the same reaction.

See the firmware manual of the drive control program for the indications generated by the drive, and for details on directing fault and warning indications to an output on the control unit for external diagnostics.

Any failures of the Safe torque off function must be reported to ABB.

Safety data

The safety data for the Safe torque off function is given below.

Note: The safety data is calculated for redundant use, and applies only if both STO channels are used.

Frame size	SIL	SC	PL	PFH (T_1 = 20 a) (1/h)	PFD_{avg} (T_1 = 2 a)	PFD_{avg} (T_1 = 5 a)	PFD_{avg} T_1 = 10 a	$MTTF_D$ (a)	DC (%)	SFF (%)	Cat.	HFT	CCF	T_M (a)	PFH_{diag} (1/h)	λ_{Diag_s} (1/h)	λ_{Diag_d} (1/h)
R3	3	3	e	3.91E-09	3.26E-05	8.15E-05	1.63E-04	4802	≥90	87.99	3	1	80	20	1.40E-12	6.43E-08	1,40E-10
R6	3	3	e	3.91E-09	3.26E-05	8.15E-05	1.63E-04	4639	≥90	87.99	3	1	80	20	1.40E-12	6.43E-08	1,40E-10
R8	3	3	e	4.22E-09	3.69E-05	9.24E-05	1.85E-04	2805	≥90	>99	3	1	80	20	3.00E-12	7.60E-08	3.00E-10
3AXD10001613538 C																	

- The STO is a type A safety component as defined in IEC 61508-2.
- Relevant failure modes:
  - The STO trips spuriously (safe failure)
  - The STO does not activate when requested
  - A fault exclusion on the failure mode “short circuit on printed circuit board” has been made (EN 13849-2, table D.5). The analysis is based on an assumption that one failure occurs at one time. No accumulated failures have been analyzed.
- STO response times:
  - STO reaction time (shortest detectable break): 1 ms
  - STO response time:
    - Frames R3 and R6: 2 ms (typical), 10 ms (maximum)
    - Frame R8: 2 ms (typical), 15 ms (maximum)
  - Fault detection time: Channels in different states for longer than 200 ms
  - Fault reaction time: Fault detection time + 10 ms.
- Indication delays:
  - STO fault indication (parameter 31.22) delay: < 500 ms
  - STO warning indication (parameter 31.22) delay: < 1000 ms.

Terms and abbreviations

Term or abbreviation	Reference	Description
Cat.	EN ISO 13849-1	Classification of the safety-related parts of a control system in respect of their resistance to faults and their subsequent behavior in the fault condition, and which is achieved by the structural arrangement of the parts, fault detection and/or by their reliability. The categories are: B, 1, 2, 3 and 4.
CCF	EN ISO 13849-1	Common cause failure (%)
DC	EN ISO 13849-1	Diagnostic coverage (%)
HFT	IEC 61508	Hardware fault tolerance
$MTTF_D$	EN ISO 13849-1	Mean time to dangerous failure: (Total number of life units) / (Number of dangerous, undetected failures) during a particular measurement interval under stated conditions
PFD_{avg}	IEC 61508	Average probability of dangerous failure on demand, that is, mean unavailability of a safety-related system to perform the specified safety function when a demand occurs

Term or abbreviation	Reference	Description
PFH	IEC 61508	Average frequency of dangerous failures per hour, that is, average frequency of a dangerous failure of a safety related system to perform the specified safety function over a given period of time
PFH_{diag}	IEC/EN 62061	Average frequency of dangerous failures per hour for the diagnostic function of STO
PL	EN ISO 13849-1	Performance level. Levels a…e correspond to SIL
Proof test	IEC 61508, IEC 62061	Periodic test performed to detect failures in a safety-related system so that, if necessary, a repair can restore the system to an "as new" condition or as close as practical to this condition
SC	IEC 61508	Systematic capability (1…3)
SFF	IEC 61508	Safe failure fraction (%)
SIL	IEC 61508	Safety integrity level (1…3)
STO	IEC/EN 61800-5-2	Safe torque off
T_1	IEC 61508-6	Proof test interval. T_1 is a parameter used to define the probabilistic failure rate (PFH or PFD) for the safety function or subsystem. Performing a proof test at a maximum interval of T_1 is required to keep the SIL capability valid. The same interval must be followed to keep the PL capability (EN ISO 13849) valid. See also section Maintenance.
T_M	EN ISO 13849-1	Mission time: the period of time covering the intended use of the safety function/device. After the mission time elapses, the safety device must be replaced. Note that any T_M values given cannot be regarded as a guarantee or warranty.
λ_{Diag_d}	IEC 61508-6	Dangerous failure rate (per hour) of the diagnostics function of STO
λ_{Diag_s}	IEC 61508-6	Safe failure rate (per hour) of the diagnostics function of STO

TÜV certificate

The TÜV certificate is available on the Internet at www.abb.com/drives/documents.

Declarations of conformity

EU Declaration of Conformity

Machinery Directive 2006/42/EC

We

Manufacturer:	ABB Oy
Address:	Hiomotie 13, 00380 Helsinki, Finland.
Phone:	+358 10 22 11

declare under our sole responsibility that the following product:

Frequency converters

ACH580-01/-31

with regard to the safety function

Safe Torque Off

is in conformity with all the relevant safety component requirements of EU Machinery Directive 2006/42/EC, when the listed safety function is used for safety component functionality.

The following harmonized standards have been applied:

EN 61800-5-2:2007	Adjustable speed electrical power drive systems – Part 5-2: Safety requirements - Functional
EN IEC 62061:2021	Safety of machinery – Functional safety of safety-related control systems
EN ISO 13849-1:2015	Safety of machinery – Safety-related parts of control systems. Part 1: General requirements
EN ISO 13849-2:2012	Safety of machinery – Safety-related parts of the control systems. Part 2: Validation
EN 60204-1:2018	Safety of machinery – Electrical equipment of machines – Part 1: General requirements

The following other standards have been applied:

IEC 61508:2010, parts 1-2	Functional safety of electrical / electronic / programmable electronic safety-related systems
IEC 61800-5-2:2016	Adjustable speed electrical power drive systems – Part 5-2: Safety requirements - Functional

The product(s) referred in this Declaration of conformity fulfil(s) the relevant provisions of other European Union Directives which are notified in Single EU Declaration of conformity 3AXD10000497691.

Authorized to compile the technical file: ABB Oy, Hiomotie 13, 00380 Helsinki, Finland.

Helsinki, August 31, 2022
Signed for and on behalf of:

Mika Vartiainen
Local Division Manager
ABB Oy

Harri Mustonen
Product Unit Manager
ABB Oy

Document number 3AXD10000437229

Declaration of Conformity

Supply of Machinery (Safety) Regulations 2008

We

Manufacturer:	ABB Oy
Address:	Hiomotie 13, 00380 Helsinki, Finland.
Phone:	+358 10 22 11

declare under our sole responsibility that the following product:

Frequency converters

ACH580-01/-31

with regard to the safety function

Safe Torque Off

is in conformity with all the relevant safety component requirements of the Supply of Machinery (Safety) Regulations 2008, when the listed safety function is used for safety component functionality.

The following designated standards have been applied:

EN 61800-5-2:2007	Adjustable speed electrical power drive systems – Part 5-2: Safety requirements - Functional
EN IEC 62061:2021	Safety of machinery – Functional safety of safety-related control systems
EN ISO 13849-1:2015	Safety of machinery – Safety-related parts of control systems. Part 1: General requirements
EN ISO 13849-2:2012	Safety of machinery – Safety-related parts of the control systems. Part 2: Validation
EN 60204-1:2018	Safety of machinery – Electrical equipment of machines – Part 1: General requirements

The following other standards have been applied:

EN 61508:2010, parts 1-2	Functional safety of electrical / electronic / programmable electronic safety-related systems
EN 61800-5-2:2017	Adjustable speed electrical power drive systems – Part 5-2: Safety requirements - Functional

The product(s) referred in this declaration of conformity fulfil(s) the relevant provisions of other UK statutory requirements, which are notified in a single declaration of conformity 3AXD10001325928.

Authorized to compile the technical file: ABB Limited, Daresbury Park, Cheshire, United Kingdom, WA4 4BT.

Helsinki, August 31, 2022
Signed for and on behalf of:

Mika Vartiainen
Local Division Manager
ABB Oy

Harri Mustonen
Product Unit Manager
ABB Oy

Document number 3AXD10001329521

15

Resistor braking

Contents of this chapter

This chapter contains information and instructions on resistor braking, brake choppers and brake resistors.

Operation principle

The brake chopper handles the extra energy generated by motor during a quick deceleration. The extra energy increases the drive DC link voltage. The chopper connects the brake resistor to the DC link whenever the voltage is greater than the limit defined by the control program. Energy consumption by the resistor losses lowers the voltage until the resistor can be disconnected.

Planning the braking system

The drive needs external brake chopper and resistors.

Selecting the drive, brake chopper and brake resistor

For the ratings of the brake choppers and resistors, refer to the resistor braking technical data.

1. Define the basic data: maximum power generated by the motor during the braking (P_{br}), braking time (t_{br}) and braking cycle time (T).
2. Select the drive. Take its resistor braking capacity into account. The power rating of the drive and brake chopper (P_{brmax}) must be greater than or equal to P_{br}.

3. Make sure that the ABB default brake resistor assembly can dissipate the braking energy. The energy generated by the motor during one resistor heat dissipation period (400 s) must be equal to or smaller than the heat dissipation capacity (E_R) of the resistor assembly. If it is not, you cannot use the default ABB resistor assembly. These alternatives are possible:
   - If it is possible, decrease the braking power or braking time, or prolong the braking cycle time.
   - Select a custom brake resistor with high enough heat dissipation capacity. The resistance may not be smaller than the minimum value defined for the chopper.
   - Use multiple of the ABB default brake resistors. Make sure that the total resistance seen from the brake chopper terminals remains unchanged. An example connection is shown below. The connection of an ABB default brake resistor assembly is on the left (two resistors). The equivalent multiple resistor connection is on the right (8 resistors). The heat dissipation capacity is four times bigger.

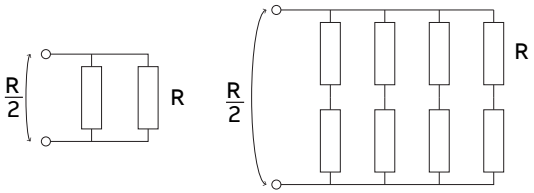

Selecting a custom brake resistor

If you want to use custom brake resistor instead of the default ABB resistor:

1. Make sure that the brake resistor resistance not too low, ie, this equation is true. Too low resistance causes overcurrent.

$$R \geq R_{min}$$

where

R	Resistance of the custom brake resistor
R_{min}	Minimum permitted resistance for the brake resistor

WARNING!
Do not use a brake resistor with a resistance lower than the specified minimum value. It causes overcurrent that damages the brake chopper and the drive.

2. Make sure that the brake resistor resistance is not too high, ie, this equation is true. Too high resistance limits the braking capacity.

$$P_{max} < \frac{U_{DC}^2}{R}$$

where

P_{max}	Maximum power generated by the motor during the braking
U_{DC}	Drive DC voltage during the braking: 1.35 · 1.2 · 415 V (when supply voltage is 380 … 415 V AC) 1.35 · 1.2 · 500 V (when supply voltage is 440 … 500 V AC)
R	Resistance of the custom resistor

3. Make sure that the brake resistor voltage rating match with the drive DC voltage during the braking. See the drive DC voltage values in the table above.
4. Make sure that the resistor can dissipate the energy transferred to it during the braking:
   - Braking energy does not exceed the resistor heat dissipation capacity (E_r) during the specified period.
   - The resistor is installed in a space that is sufficiently cooled to prevent excessive heat accumulation.
5. If you want to monitor the actual resistor temperature, make sure that the resistor has a temperature sensor.

Selecting and routing the brake resistor cables

Use the same cable type for the resistor cabling as for the drive input cabling to ensure that the input fuses also protect the resistor cable. Alternatively, a two conductor shielded cable with the same cross-sectional area can be used.

Minimizing electromagnetic interference

Make sure that the installation is compliant with the EMC requirements. Obey these rules in order to minimize electromagnetic interference caused by the rapid voltage and current changes in the resistor cables:

- Shield the brake resistor cable. Use shielded cable or a metallic enclosure. If you use unshielded single-core cables, route them inside a cabinet that efficiently suppresses the radiated emissions.
- Install the cables away from other cable routes.
- Avoid long parallel runs with other cables. The minimum parallel cabling separation distance is 0.3 meters (1 ft).
- Cross the other cables at 90° angles.
- Keep the cable as short as possible in order to minimize the radiated emissions and stress on the brake chopper. The longer the cable the greater the radiated

emissions, inductive load and voltage peaks over the IGBT semiconductors of the brake chopper.

Maximum cable length

The maximum cable length of the resistor cable(s) is 10 m(33 ft).

Selecting the installation location for the brake resistors

Protect the open (IP00) brake resistors against contact. Install the brake resistor in a place where it cools effectively. Arrange the cooling of the resistor so that:

- no danger of overheating is caused to the resistor or nearby materials, and
- the temperature of the space that the resistor is in does not go above the allowed maximum value.

WARNING!
The materials near the brake resistor must be non-flammable. The surface temperature of the resistor is high. Air flowing from the resistor is of hundreds of degrees Celsius. If the exhaust vents are connected to a ventilation system, make sure that the material withstands high temperatures. Protect the resistor against contact.

Protecting the system against thermal overload

The brake chopper protects itself and the resistor cables against thermal overload when the cables are dimensioned according to the nominal current of the drive. The drive control program includes a resistor and resistor cable thermal protection function which can be tuned by the user. See the firmware manual.

ABB requires that the resistor has a thermal switch (standard in ABB resistors) which is wired to the chopper for safety reasons. The thermal switch cable must be shielded and may not be longer than the resistor cable.

Protecting the system in fault situations

The drive has a brake thermal model which protects the brake resistor against overload. ABB recommends to enable the thermal model at start up.

ABB recommends to equip the drive with a main contactor for safety reasons even when you have enabled the resistor thermal model. Wire the contactor so that it opens in case the resistor overheats. This is essential for safety since the drive will not otherwise be able to interrupt the main supply if the chopper remains conductive in a fault situation. An example wiring diagram is shown below. ABB recommends that you use resistors equipped with a thermal switch (1) inside the resistor assembly. The switch indicates overtemperature.

ABB recommends that you also wire the thermal switch to a digital input of the drive, and configure the input to cause a fault trip at resistor overtemperature indication.

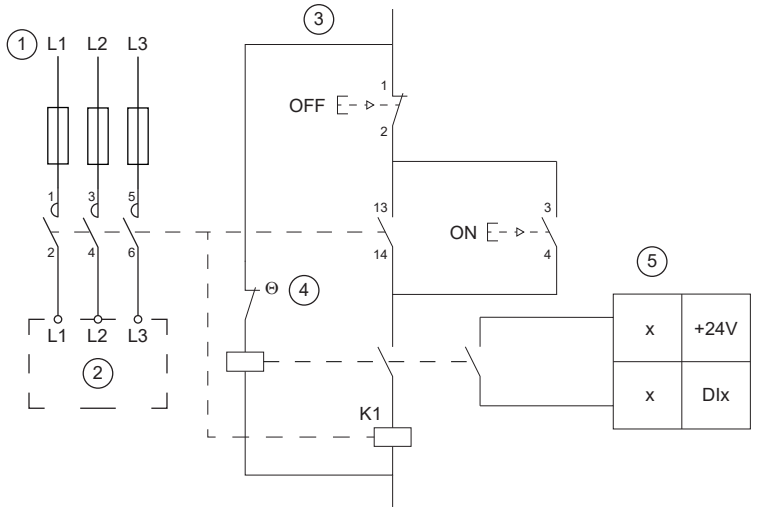

1	Drive input power connection with a main contactor
2	Drive
3	Main contactor control circuit
4	Brake resistor thermal switch
5	Digital input. Monitors the brake resistor thermal switch.

Protecting the resistor cable against short-circuits

The input fuses will also protect the resistor cable when it is identical with the input cable.

Mechanical installation

The brake chopper and brake resistors must be installed outside the drive. Obey the resistor manufacturer's instructions.

Electrical installation

Measuring the installation

Follow the instructions given under Measuring the insulation resistance of the brake resistor circuit (page 97).

Connection diagram

See section Connection diagram (page 105).

Connection procedure

Connect the brake chopper the DC+ and DC- terminals of the drive. Connect the resistor cables to the brake chopper as described in the brake chopper manual. If a shielded three-conductor cable is used, cut the third conductor, insulate it, and ground the twisted shield of the cable (protective earth conductor of the resistor assembly) at both ends.

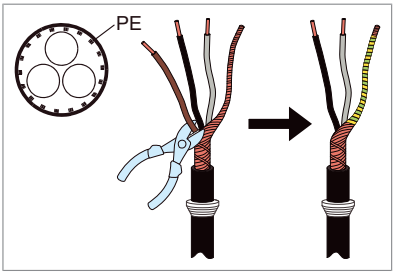

Note: For NEC installations the shield is not allowed as PE conductor. A separate insulaled conductor in required.

Start-up

WARNING!
Make sure that there is sufficient ventilation. New brake resistors can have a protective grease coating. When the resistor warms up for the first time, the grease burns off and can produce some smoke.

Set the following parameters (HVAC control program):

- Set parameter 30.30 Overvoltage control to disable.
- Set parameter 31.01 External event 1 source to point to the digital input where the thermal switch of the brake resistor is wired.
- Set parameter 31.02 External event 1 type to Fault.
- Set parameter 43.06 Brake chopper function to Enable. If you select Enabled with thermal model, set also the brake resistor overload protection parameters 43.08 and 43.09 according to the application.
- Check the resistance value of parameter 43.10 Brake resistance.

With these parameter settings, the drive stops by coasting on brake resistor overtemperature.

WARNING!
If you disable the brake chopper by parameter, also disconnect the brake resistor cable from the drive. Otherwise, there is a risk of resistor overheating and damage.

Technical data

Ratings

Contact ABB for the brake chopper and resistor specifications.

Terminals and cable entry data

See section Terminal and entry data for the power cables (page 207).

16

Common mode, d*u*/d*t* and sine filters

Contents of this chapter

This chapter describes how to select additional filters for the drive.

Common mode filters

The drive frames R3 and R6 have the common mode filter built-in. The R8 standard delivery includes the common mode filter installation kit which the customer must install. For installation instructions, refer to

- Common mode filter kit for ACS880-01 frame R7, and for ACS880-11, ACS880-31, ACH580-31 and ACQ580-31 frame R8 installation instructions (3AXD50000015179 [English]).

d*u*/d*t* filters

When is a d*u*/d*t* filter needed?

See section Examining the compatibility of the motor and drive (page 63).

d*u*/d*t* filter types

ACH580-31-...	du/dt filter type
IEC ratings: U_n = 400 V	
09A5-4	NOCH0016-6x
12A7-4	NOCH0016-6x
018A-4	NOCH0016-6x or NOCH0030-6x[1)]
026A-4	NOCH0030-6x
033A-4	NOCH0070-6x
039A-4	NOCH0070-6x
046A-4	NOCH0070-6x
062A-4	NOCH0070-6x
073A-4	NOCH0070-6x or NOCH0120-6x[2)]
088A-4	NOCH0120-6x
106A-4	NOCH0120-6X
145A-4	FOCH0260-70
169A-4	FOCH0260-70
206A-4	FOCH0260-70
IEC ratings: U_n = 480 V	
09A5-4	NOCH0016-6x
12A7-4	NOCH0016-6x
018A-4	NOCH0016-6x or NOCH0030-6x[1)]
026A-4	NOCH0030-6x
033A-4	NOCH0070-6x
039A-4	NOCH0070-6x
046A-4	NOCH0070-6x
062A-4	NOCH0070-6x
073A-4	NOCH0070-6x or NOCH0120-6x[2)]
088A-4	NOCH0120-6x
106A-4	NOCH0120-6x
145A-4	FOCH0260-7X
169A-4	FOCH0260-7X
	3AXD00000586715

ACH580-31-...	du/dt filter type
206A-4	FOCH0260-7X
	3AXD00000586715

1) NOCH0016-6x can be used if full load current is not needed.
2) NOCH0070-6x can be used if full load current is not needed.

ACH580-31-...	du/dt filter type
UL (NEC) ratings: U_n = 480 V	
07A6-4	NOCH0016-6x
012A-4	NOCH0016-6x
014A-4	NOCH0016-6x or NOCH0030-6x[1)]
023A-4	NOCH0030-6x
027A-4	NOCH0070-6x
034A-4	NOCH0070-6x
044A-4	NOCH0070-6x
052A-4	NOCH0070-6x
065A-4	NOCH0070-6x or NOCH0120-6x[2)]
077A-4	NOCH0120-6x
096A-4	NOCH0120-6X
124A-4	FOCH0260-7X
156A-4	FOCH0260-7X
180A-4	FOCH0260-7X
	3AXD00000586715

1) NOCH0016-6x can be used if full load current is not needed.
2) NOCH0070-6x can be used if full load current is not needed.

Description, installation and technical data of the filters

See AOCH and NOCH du/dt filters hardware manual (3AFE58933368 [English]) or FOCHxxx-xx du/dt filters hardware manual (3AFE68577519 [English]).

Sine filters

See section Examining the compatibility of the motor and drive (page 63).

Contact ABB for sine filter specifications.

17

CAIO-01 bipolar analog I/O adapter module

Contents of this chapter

This chapter describes how to install and start up the optional CAIO-01 multifunction extension module. The chapter also contains diagnostics and technical data.

Product overview

The CAIO-01 bipolar analog I/O module expands the inputs and outputs of the drive control unit. It has three bipolar current/voltage inputs and two unipolar current/voltage outputs. The inputs can handle positive and negative signals. The way the drive interprets the negative range of the inputs depends on the parameter settings of the drive. The voltage/current selection of the inputs is done with a parameter.

Layout

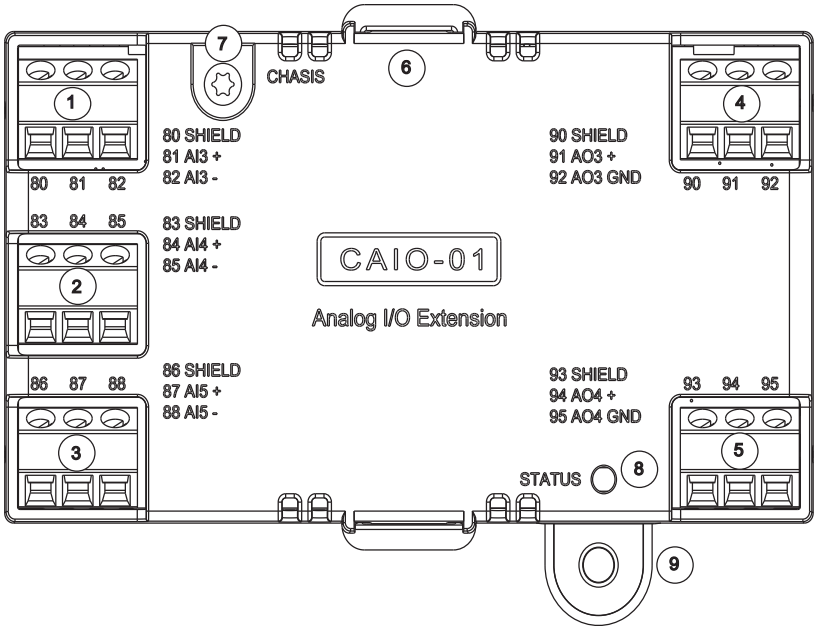

1, 2, 3	Analog inputs		4, 5	Analog outputs	
80	SHIELD	Cable shield connection	90	SHIELD	Cable shield connection
81	AI3+	Analog input 3 positive signal	91	AO3	Analog output 3 signal
82	AI3-	Analog input 3 negative signal	92	AGND	Analog ground potential
83	SHIELD	Cable shield connection	93	SHIELD	Cable shield connection
84	AI4+	Analog input 4 positive signal	94	AO4	Analog output 4 signal
85	AI4-	Analog input 4 negative signal	95	AGND	Analog ground potential
86	SHIELD	Cable shield connection			
87	AI5+	Analog input 5 positive signal			
88	AI5-	Analog input 5 negative signal			
6	Control unit slot interface				
7	Grounding hole				
8	Diagnostic LED				
9	Mounting hole				

Mechanical installation

Necessary tools

- Screwdriver and a set of suitable bits.

Unpacking and examining the delivery

1. Open the option package. Make sure that the package contains:
   - the option module
   - a mounting screw.
2. Make sure that there are no signs of damage.

Installing the module

See section Installing option modules (page 120).

Electrical installation

WARNING!
Obey the safety instructions of the drive. If you ignore them, injury or death, or damage to the equipment can occur.

Stop the drive and do the steps in section Electrical safety precautions (page 20) before you start the work.

Necessary tools

- Screwdriver and a set of suitable bits.

Wiring

Connect the external cables to the applicable module terminals. Ground the outer shield of the cables to the SHIELD terminal.

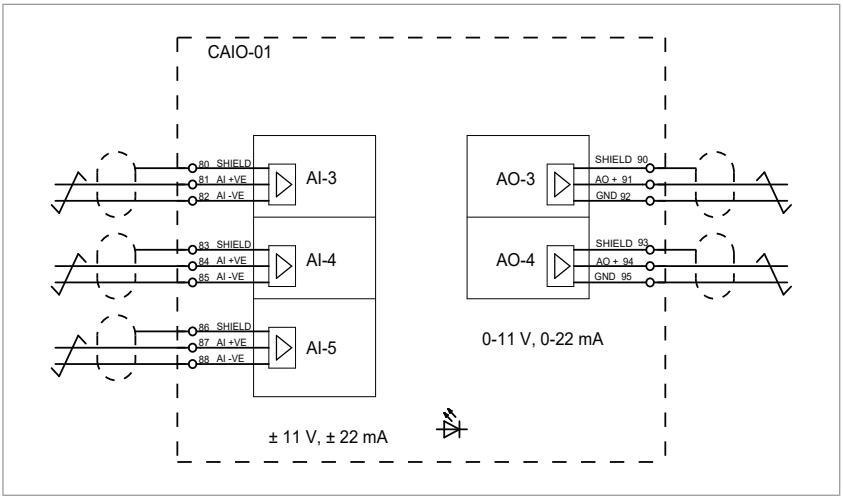

Start-up

Setting the parameters

1. Power up the drive.
2. If no warning is shown,
   - make sure that the value of both parameters 15.01 Extension module type and 15.02 Detected extension module is CAIO-01.

   If warning A7AB Extension I/O configuration failure is shown,
   - make sure that the value of 15.02 is CAIO-01
   - set the value of parameter 15.01 to CAIO-01.

   You can now see the parameters of the extension module in group 15 I/O extension module.
3. Set the parameters of analog inputs AI3, AI4, AI5 or analog outputs AO3 or AO4 to applicable values, see the firmware manual.

Example: To connect supervision 1 to AI3 of the extension module:

- Select the mode of the supervision function (32.05 Supervision function 1).
- Set limits for the supervision function (32.09 Supervision 1 low and 32.10 Supervision 1 high).
- Select the supervision action (32.06 Supervision 1 action).
- Connect 32.07 Supervision 1 signal to 15.52 AI3 scaled value.

Diagnostics

LEDs

The adapter module has one diagnostic LED.

Color	Description
Green	The adapter module is powered up.
Red	There is no communication with the drive control unit or the adapter module has detected an error.

Technical data

Installation	Into slot 2 of drive control unit
Degree of protection	IP20 / UL 1 Type
Ambient conditions	See the drive technical data.
Package	Cardboard
Analog inputs (80..82, 83..85, 86..88)	
Maximum wire size	1.5 mm^2
Input voltage (AI+ and AI-)	-11 V … +11 V
Input current (AI+ and AI-)	-22 mA … +22 mA
Input resistance	>200 kohm (voltage mode), 100 ohm (current mode)
Optional cable shield connections	
Analog outputs (90..92, 93..95)	
Maximum wire size	1.5 mm^2
Output voltage (AO+ and AO-)	0 V … +11 V
Output current (AO+ and AO-)	0 mA … +22 mA
Output resistance	< 20 ohm
Recommended load	>10 kohm
Inaccuracy	± 1% Typical, ± 1.5% Max of full-scale value
Optional cable shield connections	

Isolation areas

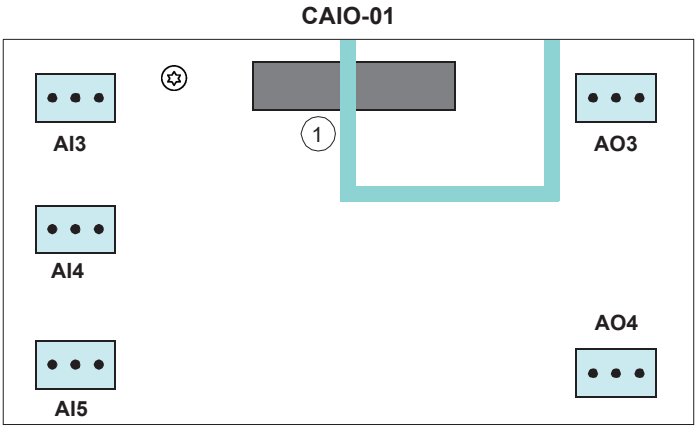

1	Plugged to drive control unit SLOT 2
	Reinforced insulation (IEC 61800-5-1:2007)

Dimension drawings

The dimensions are in millimeters.

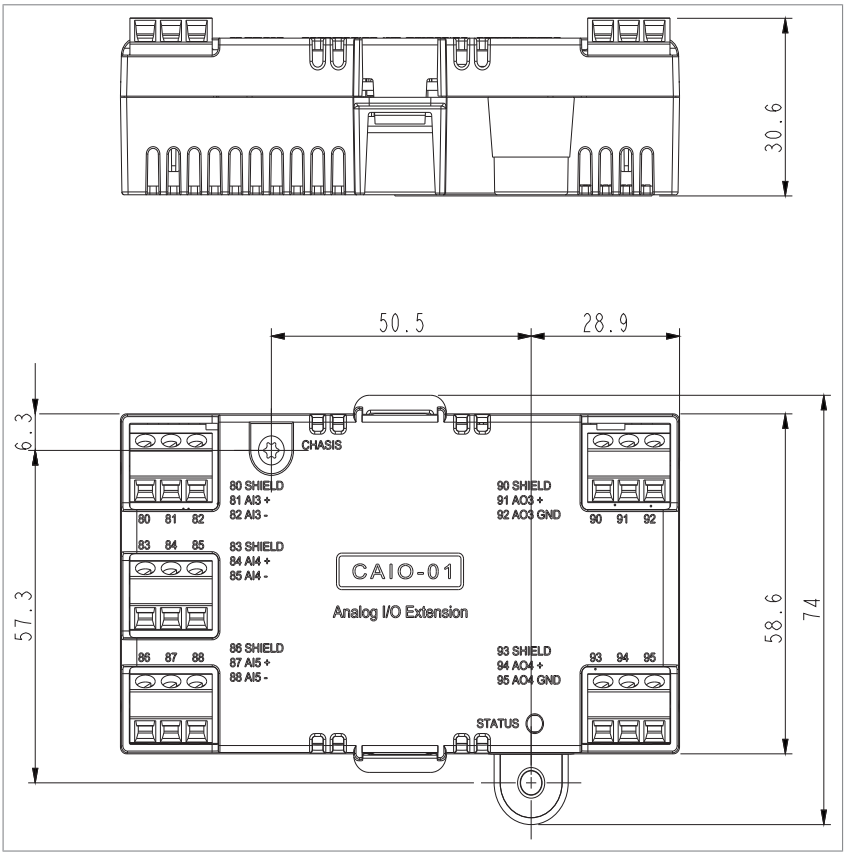

18

CHDI-01 115/230 V digital input extension module

Contents of this chapter

This chapter describes how to install and start up the optional CHDI-01 multifunction extension module. The chapter also contains diagnostics and technical data.

Product overview

The CHDI-01 115/230 V digital input extension module expands the inputs of the drive control unit. It has six high voltage inputs and two relay outputs.

Layout and connection examples

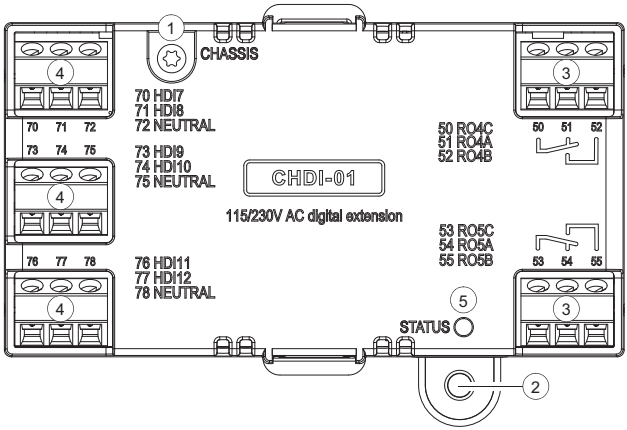

4	3-pin terminal blocks for 115/230 V inputs		3	Relay outputs	
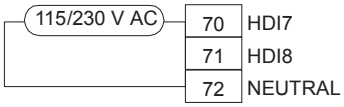			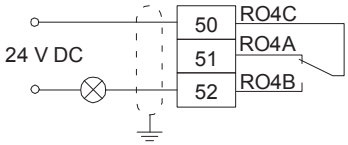		
70	HDI7	115/230 V input 1	50	RO4C	Common, C
71	HDI8	115/230 V input 2	51	RO4B	Normally closed, NC
72	NEUTRAL [1]	Neutral point	52	RO4A	Normally open, NO
73	HDI9	115/230 V input 3	53	RO5C	Common, C
74	HDI10	115/230 V input 4	54	RO5B	Normally closed, NC
75	NEUTRAL [1]	Neutral point	55	RO5A	Normally open, NO
76	HDI11	115/230 V input 5	1	**Grounding screw**	
77	HDI12	115/230 V input 5	2	**Hole for mounting screw**	
78	NEUTRAL [1]	Neutral point	5	**Diagnostic LED**. Green = The extension module is powered up.	

[1] Neutral points 72, 75 and 78 are connected.

Mechanical installation

Necessary tools

- Screwdriver and a set of suitable bits.

Unpacking and examining the delivery

1. Open the option package. Make sure that the package contains:
   - the option module
   - a mounting screw.
2. Make sure that there are no signs of damage.

Installing the module

See section Installing option modules (page 120).

Electrical installation

WARNING!
Obey the safety instructions of the drive. If you ignore them, injury or death, or damage to the equipment can occur.

Stop the drive and do the steps in section Electrical safety precautions (page 20) before you start the work.

Necessary tools

- Screwdriver and a set of suitable bits.

Wiring

Connect the external control cables to the applicable module terminals. Ground the outer shield of the control cables 360° under the grounding clamp on the grounding shelf.

Start-up

Setting the parameters

1. Power up the drive.
2. If no warning is shown,
   - make sure that the value of both parameters 15.01 Extension module type and 15.02 Detected extension module is CHDI-01.

   If warning the A7AB Extension I/O configuration failure is shown,
   - make sure that the value of parameter 15.02 is CHDI-01.
   - set parameter 15.01 value to CHDI-01.

You can now see the parameters of the extension module in parameter group 15 I/O extension module.

3. Set the parameters of the extension module to applicable values.

Parameter setting example for relay output

This example shows how make the relay output RO4 of the extension module indicate the reverse direction of rotation of the motor with a one-second delay.

Parameter	Setting
15.07 RO4 source	Reverse
15.08 RO4 ON delay	1 s
15.09 RO4 OFF delay	1 s

Fault and warning messages

Warning A7AB Extension I/O configuration failure.

Technical data

Installation	Into an option slot on the drive control unit
Degree of protection	IP20 / UL Type 1
Ambient conditions	See the drive technical data.
Package	Cardboard
Reley outputs (50…52, 53…55)	
Maximum wire size	1.5 mm^2
Minimum contact rating	12 V / 10 mA
Maximum contact rating	250 V AC / 30 V DC / 2 A
Maximum breaking capacity	1500 VA
115/230 V inputs (70…78)	
Maximum wire size	1.5 mm^2
Input voltage	115 to 230 V AC ±10%
Maximum current leakage in digital off state	2 mA
Isolation areas	

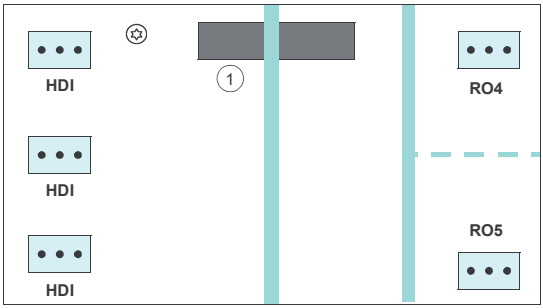

1	Plugged to drive **SLOT2**
	Reinforced insulation (IEC 61800-5-1:2007)
	Functional insulation (IEC 61800-5-1:2007)

Dimension drawing

The dimensions are in millimeters and [inches].

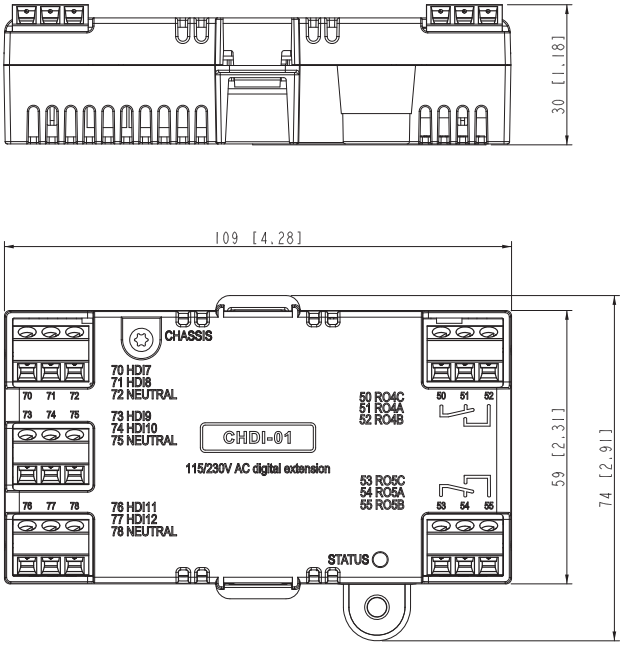

19

CMOD-01 multifunction extension module (external 24 V AC/DC and digital I/O)

Contents of this chapter

This chapter describes how to install and start up the optional CMOD-01 multifunction extension module. The chapter also contains diagnostics and technical data.

Product overview

The CMOD-01 multifunction extension module (external 24 V AC/DC and digital I/O) expands the outputs of the drive control unit. It has two relay outputs and one transistor output, which can operate as a digital or frequency output.

In addition, the extension module has an external power supply interface, which can be used to power up the drive control unit in case the drive power supply is not on. If you do not need the backup power supply, you do not have to connect it because the module is powered from the drive control unit by default.

With CCU-24 control unit, a CMOD-01 module is not necessary for external 24 V AC/DC supply connection. The external supply is connected directly to terminals 40 and 41 on the control unit.

Layout and example connections

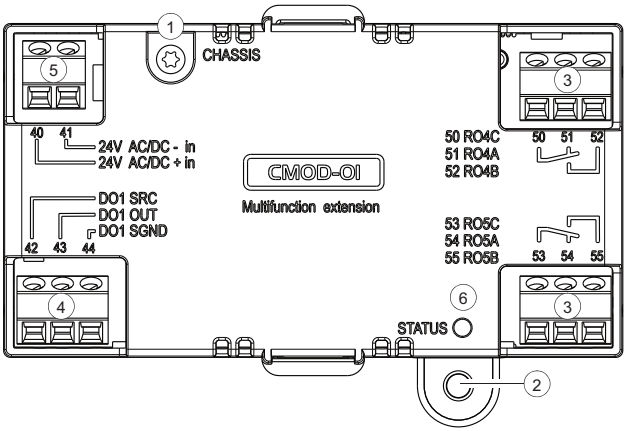

1	**Grounding screw**	**6**	**Diagnostic LED**
2	**Hole for mounting screw**		
5	**2-pin terminal block for external power supply**	**3**	**3-pin terminal blocks for relay outputs**

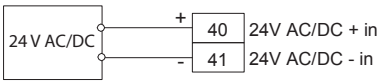

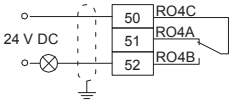

40	24 V AC/DC + in	External 24 V (AC/DC) input	50	RO4C	Common, C
41	24 V AC/DC - in	External 24 V (AC/DC) input	51	RO4A	Normally closed, NC

4	3-pin terminal block for for transistor output		52	RO4B	Normally open, NO
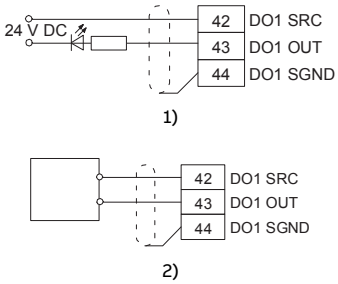					
42	DO1 SRC	Source input	53	RO5C	Common, C
43	DO1 OUT	Digital or frequency output	54	RO5A	Normally closed, NC
44	DO1 SGND	Ground (earth) potential	55	RO5B	Normally open, NO

1) Digital output connection example
2) An externally supplied frequency indicator which provides, for example:
- a 40 mA / 12 V DC power supply for the sensor circuit (CMOD frequency output)
- suitable voltage pulse input (10 Hz … 16 kHz).

Mechanical installation

Necessary tools

- Screwdriver and a set of suitable bits.

Unpacking and examining the delivery

1. Open the option package. Make sure that the package contains:
   - the option module
   - a mounting screw.
2. Make sure that there are no signs of damage.

Installing the module

See section Installing option modules (page 120).

Electrical installation

WARNING!
Obey the safety instructions of the drive. If you ignore them, injury or death, or damage to the equipment can occur.

Stop the drive and do the steps in section Electrical safety precautions (page 20) before you start the work.

Necessary tools

- Screwdriver and a set of suitable bits

Wiring

Connect the external control cables to the applicable module terminals. Ground the outer shield of the control cables 360° under the grounding clamp on the grounding shelf

WARNING!
Do not connect the +24 V AC cable to the control unit ground when the control unit is powered using an external 24 V AC supply.

Start-up

Setting the parameters

1. Power up the drive.
2. If no warning is shown,
   - make sure that the value of both parameters 15.01 Extension module type and 15.02 Detected extension module is CMOD-01.

   If the warning A7AB Extension I/O configuration failure is shown,
   - make sure that the value of parameter 15.02 is CMOD-01.
   - set the parameter 15.01 value to CMOD-01.

   You can now see the parameters of the extension module in parameter group 15 I/O extension module.
3. Set the parameters of the extension module to applicable values.

Examples are given below.

Parameter setting example for relay output

This example shows how make relay output RO4 of the extension module indicate the reverse direction of rotation of the motor with a one-second delay.

Parameter	Setting
15.07 RO4 source	Reverse
15.08 RO4 ON delay	1 s
15.09 RO4 OFF delay	1 s

Parameter setting example for digital output

This example shows how to make digital output DO1 of the extension module indicate the reverse direction of rotation of the motor with a one-second delay.

Parameter	Setting
15.22 DO1 configuration	Digital output
15.23 DO1 source	Reverse
15.24 DO1 ON delay	1 s
15.25 DO1 OFF delay	1 s

Parameter setting example for frequency output

This example shows how to make digital output DO1 of the extension module indicate the motor speed 0…1500 rpm with a frequency range of 0…10000 Hz.

Parameter	Setting
15.22 DO1 configuration	Frequency output
15.33 Freq out 1 source	01.01 Motor speed used
15.34 Freq out 1 src min	0
15.35 Freq out 1 src max	1500.00
15.36 Freq out 1 at src min	0 Hz
15.37 Freq out 1 at src max	10000 Hz

Diagnostics

Faults and warning messages

Warning A7AB Extension I/O configuration failure.

LEDs

The extension module has one diagnostic LED.

Color	Description
Green	The extension module is powered up.

Technical data

Installation	Into an option slot on the drive control unit
Degree of protection	IP20 / UL Type 1
Ambient conditions	See the drive technical data.
Package	Cardboard
Reley outputs (50…52, 53…55)	
Maximum wire size	1.5 mm^2
Minimum contact rating	12 V / 10 mA
Maximum contact rating	250 V AC / 30 V DC / 2 A
Maximum breaking capacity	1500 VA
Transistor output (42…44)	
Maximum wire size	1.5 mm^2
Type	Transistor output PNP
Maximum load	4 kohm
Maximum switching voltage	30 V DC
Maximum switching current	100 mA / 30 V DC, short-circuit protected
Frequency	10 Hz … 16 kHz
Resolution	1 Hz
Inaccuracy	0.2%
External power supply (40…41)	
Maximum wire size	1.5 mm^2
Input voltage	24 V AC / V DC ±10% (GND, user potential)
Maximum power consumption	25 W, 1.04 A at 24 V DC

Isolation areas	
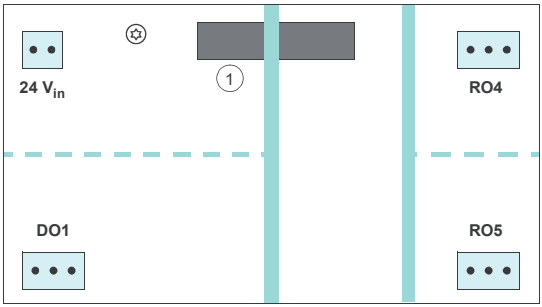	
1	Plugged to drive **SLOT2**
	Reinforced insulation (IEC 61800-5-1:2007)
	Functional insulation (IEC 61800-5-1:2007)

Dimension drawing

The dimensions are in millimeters and [inches].

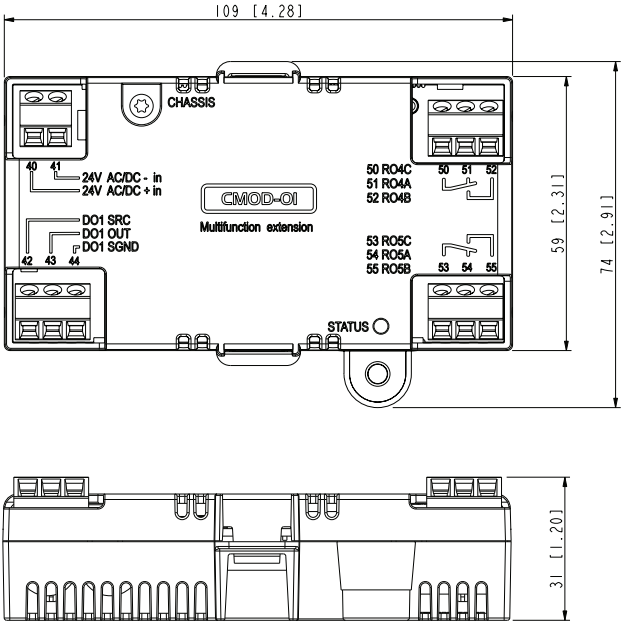

20

CMOD-02 multifunction extension module (external 24 V AC/DC and isolated PTC interface)

Contents of this chapter

This chapter describes how to install and start up the optional CMOD-02 multifunction extension module. The chapter also contains diagnostics and technical data.

Product overview

The CMOD-02 multifunction extension module (external 24 V AC/DC and isolated PTC interface) has a motor thermistor connection for supervising the motor temperature and one relay output, which indicates the thermistor status. In case the thermistor overheats, the drive trips on motor overtemperature. If Safe torque off tripping is required, the user must wire the overtemperature indication relay to the certified Safe torque off input of the drive.

In addition, the extension module has an external power supply interface, which can be used to power up the drive control unit in case the drive power supply is not on. If you do not need the back-up power supply, you do not have to connect it because the module is powered from the drive control unit by default.

294 CMOD-02 multifunction extension module (external 24 V AC/DC and isolated PTC interface)

There is reinforced insulation between the motor thermistor connection, the relay output and the drive control unit interface. Thus, you can connect a motor thermistor to the drive through the extension module.

With CCU-24 control unit, a CMOD-02 module is not necessary for external 24 V AC/DC supply connection. The external supply is connected directly to terminals 40 and 41 on the control unit.

Layout and example connections

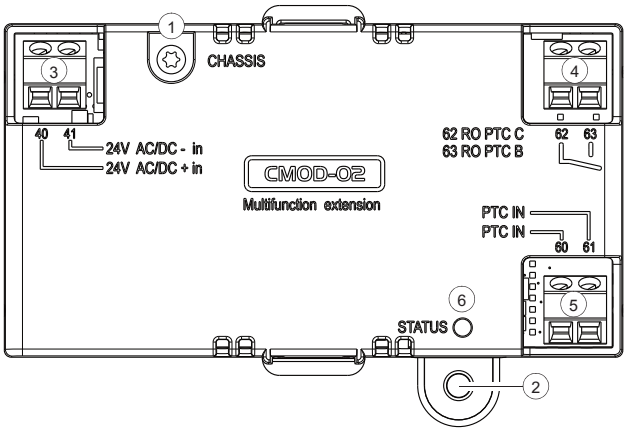

3	2-pin terminal block for external power supply	4	2-pin terminal block for relay output
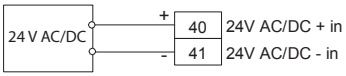		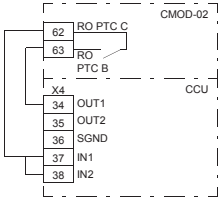	

40	24 V AC/DC + in	External 24 V (AC/DC) input	62	RO PTC C	Common, C
41	24 V AC/DC - in	External 24 V (AC/DC) input	63	RO PTC B	Normally open, NO

5	Motor thermistor connection		1	Grounding screw
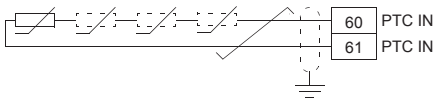 One to six PTC thermistors connected in series.				
60	PTC IN	PTC connection	2	Hole for mounting screw
61	PTC IN	Ground (earth) potential	6	Diagnostic LED

Mechanical installation

Necessary tools

- Screwdriver and a set of suitable bits.

Unpacking and examining the delivery

1. Open the option package. Make sure that the package contains:
   - the option module
   - a mounting screw.
2. Make sure that there are no signs of damage.

Installing the module

See section Installing option modules (page 120).

Electrical installation

WARNING!
Obey the safety instructions of the drive. If you ignore them, injury or death, or damage to the equipment can occur.

Stop the drive and do the steps in section Electrical safety precautions (page 20) before you start the work.

Necessary tools

- Screwdriver and a set of suitable bits

Wiring

Connect the external control cables to the applicable module terminals. Ground the outer shield of the control cables 360° under the grounding clamp on the grounding shelf

WARNING!
Do not connect the +24 V AC cable to the control unit ground when the control unit is powered using an external 24 V AC supply.

Start-up

Setting the parameters

1. Power up the drive.
2. If no warning is shown,
   - make sure that the values of both parameters 15.01 Extension module type and 15.02 Detected extension module are CMOD-02.

   If the warning A7AB Extension I/O configuration failure is shown,
   - make sure that the value of parameter 15.02 is CMOD-02.
   - set the parameter 15.01 value to CMOD-02.

   You can now see the parameters of the extension module in parameter group 15 I/O extension module.

Diagnostics

Faults and warning messages

Warning A7AB Extension I/O configuration failure.

LEDs

The extension module has one diagnostic LED.

Color	Description
Green	The extension module is powered up.

Technical data

Installation	Into option slot 2 on the drive control unit
Degree of protection	IP20 / UL Type 1
Ambient conditions	See the drive technical data.
Package	Cardboard

Motor thermistor connection (60…61)	
Maximum wire size	1.5 mm^2
Supported standards	DIN 44081 and DIN 44082
Triggering threshold	3.6 kohm ±10%
Recovery threshold	1.6 kohm ±10%
PTC terminal voltage	≤ 5.0 V
PTC terminal current	< 1 mA
Short-circuit detection	< 50 ohm ±10%
The PTC input is reinforced/double insulated. If the motor part of the PTC sensor and wiring are reinforced/double insulated, voltages on the PTC wiring are within SELV limits. If the motor PTC circuit is not reinforced/double insulated (ie, it is basic insulated), it is mandatory to use reinforced/double insulated wiring between the motor PTC and CMOD-02 PTC terminal.	
Relay output (62…63)	
Maximum wire size	1.5 mm^2
Maximum contact rating	250 V AC / 30 V DC / 5 A
Maximum breaking capacity	1000 VA
External power supply (40…41)	
Maximum wire size	1.5 mm^2
Input voltage	24 V AC / V DC ±10% (GND, user potential)
Maximum power consumption	25 W, 1.04 A at 24 V DC
Isolation areas	

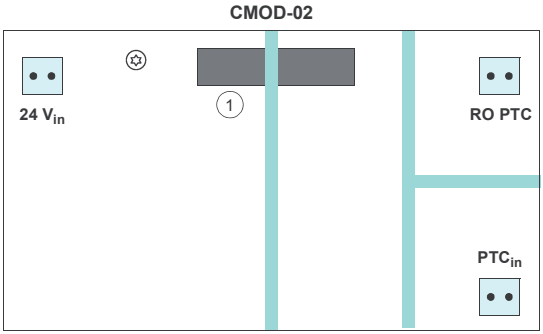

1	Plugged to drive **SLOT2**

	Reinforced insulation (IEC 61800-5-1:2007)
	Functional insulation (IEC 61800-5-1:2007)

Dimension drawing

The dimensions are in millimeters and [inches].

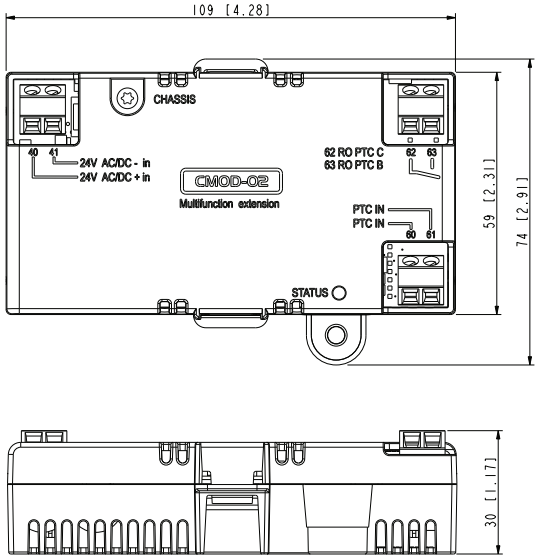

Further information

Product and service inquiries

Address any inquiries about the product to your local ABB representative, quoting the type designation and serial number of the unit in question. A listing of ABB sales, support and service contacts can be found by navigating to www.abb.com/searchchannels.

Product training

For information on ABB product training, navigate to new.abb.com/service/training.

Providing feedback on ABB manuals

Your comments on our manuals are welcome. Navigate to new.abb.com/drives/manuals-feedback-form.

Document library on the Internet

You can find manuals and other product documents in PDF format on the Internet at www.abb.com/drives/documents.

a2 (frozen)
PDF-A5
Created 2023-10-05, 08:17:08

www.abb.com/drives

3AXD50000037066G

© Copyright 2023 ABB. All rights reserved.
Specifications subject to change without notice.

3AXD50000037066 Rev G (EN)
2023-10-03