ABB general purpose drives

Hardware manual
ACS580-07 drives
(250 to 500 kW)

Power and productivity
for a better world™

List of related manuals

Drive hardware manuals and guides	Code (English)
ACS580-07 hardware manual	*3AXD50000032622*
ACS-AP-X assistant control panels user's manual	*3AUA0000085685*

Drive firmware manuals	
ACS580 standard control program firmware manual	*3AXD50000016097*

Option manuals and guides	
Emergency stop, stop category 0 (option +Q951) for ACS580-07 drives user's manual	*3AXD50000032016*
CPTC-02 ATEX-certified thermistor protection module, Ex II (2) GD (+L537+Q971) user's manual	*3AXD50000030058*
FCAN-01 CANopen adapter module user's manual	*3AFE68615500*
FCNA-01 ControlNet adapter module user's manual	*3AUA0000141650*
FDNA-01 DeviceNet™ adapter module user's manual	*3AFE68573360*
FECA-01 EtherCAT adapter module user's manual	*3AFE68573360*
FENA-01/-11/-21 Ethernet adapter module user's manual	*3AUA0000093568*
FEPL-02 Ethernet POWERLINK adapter module user's manual	*3AUA0000123527*
FPBA-01 PROFIBUS DP adapter module user's manual	*3AFE68573271*
FSCA-01 RS-485 adapter module user's manual	*3AUA0000109533*

Tool and maintenance manuals and guides	
Drive composer start-up and maintenance PC tool user's manual	*3AUA0000094606*
Converter module capacitor reforming instructions	*3BFE64059629*
NETA-21 remote monitoring tool user's manual	*3AUA00000969391*
NETA-21 remote monitoring tool installation and startup guide	*3AUA0000096881*

You can find manuals and other product documents in PDF format on the Internet. See section *Document library on the Internet* on the inside of the back cover. For manuals not available in the Document library, contact your local ABB representative.

The code below opens an online listing of the manuals applicable to this product.

ACS580-07 manuals

Videos:

https://www.youtube.com/watch?v=z34USv99vPs&feature=youtu.be

https://www.youtube.com/watch?v=YAf6YTAfHgk&feature=youtu.be

Hardware manual

ACS580-07 drives

Table of contents

1. Safety instructions

4. Mechanical installation

6. Electrical installation

9. Start-up

© 2016 ABB Oy. All Rights Reserved.

3AXD50000032622 Rev A
EN
EFFECTIVE: 2016-03-16

Table of contents

1. Safety instructions

Contents of this chapter . . . 13
Use of warnings . . . 13
General safety in installation, start-up and maintenance . . . 14
Electrical safety in installation, start-up and maintenance . . . 16
Precautions before electrical work . . . 16
Additional instructions and notes . . . 17
Grounding . . . 18
Additional instructions for permanent magnet motor drives . . . 19
Safety in installation, start-up and maintenance . . . 19

2. Introduction to the manual

Contents of this chapter . . . 21
Target audience . . . 21
Contents of the manual . . . 21
Related manuals . . . 22
Categorization by frame size and option code . . . 22
Quick installation, start-up and operating flowchart . . . 22
Terms and abbreviations . . . 23

3. Operation principle and hardware description

Contents of this chapter . . . 25
Product overview . . . 25
Single-line circuit diagram of the drive . . . 26
General information on the cabinet layout . . . 26
Cabinet layout – bottom entry and exit of cables . . . 27
Overview of power and control connections . . . 29
Door switches and lights . . . 31
Main switch-disconnector Q1 . . . 31
Control panel . . . 32
Control by PC tools . . . 32
Common mode filter . . . 32
Descriptions of cabinet options . . . 32
Degree of protection . . . 33
Definitions . . . 33
IP42 and UL Type 1 Filtered (standard) . . . 33
IP54 and UL Type 12 (option +B055) . . . 33
Empty cubicles (options +C196 to +C201) . . . 33
du/dt filter (option +E205) . . . 33
Cabinet heater with external supply (option +G300) . . . 33
UK gland/conduit plate (option +H358) . . . 34
Additional terminal block X504 (option +L504) . . . 34
Type designation label . . . 34
Type designation key . . . 35

4. Mechanical installation

Contents of this chapter 39
Examining the installation site 39
Necessary tools 40
Moving and unpacking the drive 41
Unpacking the transport package 42
Checking the delivery 42
Lifting the cabinet 43
Moving the cabinet after unpacking 43
Laying the cabinet on its back 43
Moving on rollers 44
Final placement 44
Installing the IP54 roof 45
Attaching the cabinet to the floor and wall or roof 46
General rules 46
Attaching methods 47
Alternative 1 – Clamping 47
Alternative 2 – Using the holes inside the cabinet 47
Miscellaneous 48
Cable duct in the floor below the cabinet 48
Arc welding 48

5. Guidelines for planning the electrical installation

Contents of this chapter 49
Limitation of liability 49
Selecting the supply disconnecting device 49
Selecting the main contactor 49
Protecting the motor insulation and bearings 50
Examining the compatibility of the motor and drive 50
Requirements table 51
Additional requirements for ABB motors of types other than M2_, M3_, M4_, HX_ and AM_ 52
Additional requirements for ABB high-output and IP23 motors 52
Additional requirements for non-ABB high-output and IP23 motors 52
Additional data for calculating the rise time and the peak line-to-line voltage . . . 53
Additional note for common mode filters 53
Selecting the power cables 53
General rules 53
Typical power cable sizes 54
Alternative power cable types 54
Recommended power cable types 55
Power cable types for limited use 55
Not allowed power cable types 55
Motor cable shield 55
Selecting the control cables 56
Shielding 56
Signals in separate cables 56
Signals allowed to be run in the same cable 56
Relay cable type 56
Control panel cable length and type 56
Routing the cables 56
Separate control cable ducts 57

Continuous motor cable shield or enclosure for equipment on the motor cable 57
Implementing thermal overload and short-circuit protection 58
Protecting the drive and input power cable in short-circuits 58
Protecting the motor and motor cable in short-circuits 58
Protecting the drive and the input power and motor cables against thermal overload . . 58
Protecting the motor against thermal overload 58
Protecting the drive against ground faults 59
Residual current device compatibility 59
Implementing the emergency stop function 59
Implementing ATEX-certified thermistor protection 59
Implementing the Safe torque off function 59
Implementing the Power-loss ride-through function 60
Units with line contactor (option +F250) 60
Supplying power for the auxiliary circuits 60
Using power factor compensation capacitors with the drive 60
Implementing a safety switch between the drive and the motor 60
Using a contactor between the drive and the motor 61
Implementing a bypass connection 61
Example bypass connection 62
Switching the motor power supply from drive to direct-on-line 62
Switching the motor power supply from direct-on-line to drive 63
Protecting the contacts of relay outputs 63
Connecting a motor temperature sensor to the drive I/O 64

6. Electrical installation

Contents of this chapter 65
Warnings 65
Checking the insulation of the assembly 65
Drive 65
Input cable 65
Motor and motor cable 66
Attaching the device stickers on the cabinet door 66
Connecting the power cables 67
Connection diagram 67
Layout of the input and motor cable connection terminals (frames R10 and R11) . . . 68
Connection procedure (IEC) 68
Grounding the motor cable shield at the motor end 71
Connecting the control cables 71
Control cable connection procedure 71
Grounding the outer shields of the control cables at the cabinet lead-through . . . 72
Routing the control cables inside the cabinet (frames R10 and R11) 74
Connecting the control unit cables 74
Connecting the emergency stop push buttons (options +Q951) 75
Connecting the external power supply cables for the cabinet heater and lighting and motor heater (options +G300) 75
Setting the voltage range of the auxiliary control voltage transformer (T21) 76
Connecting a PC 76
Installing option modules 77
Option slot 3 (embedded fieldbus adapter modules) 77
Option slot 2 (I/O extension modules) 77
Option slot 1 (fieldbus adapter modules) 77
Wiring the optional modules 77

7. Control unit

Contents of this chapter 79
Layout 80
Default I/O connection diagram 81
Switches 83
PNP configuration for digital inputs (DIGITAL IN) 83
NPN configuration for digital inputs (DIGITAL IN) 84
Connection for obtaining 0…10 V from analog output 2 (ANALOG IN/OUT) 84
Connection examples of two-wire and three-wire sensors to analog input 2 (ANALOG IN/OUT) 85
DI6 as frequency input 85
AI1 and AI2 as Pt100, Pt1000, Ni1000, KTY83 and KTY84 sensor inputs (ANALOG IN/OUT) 86
Safe torque off (STO) 86
Technical data 87

8. Installation checklist

Contents of this chapter 89
Warnings 89
Checklist 89

9. Start-up

Contents of this chapter 91
Start-up procedure 91
Checks/Settings with no voltage connected 91
Powering up the drive 91
Start-up with the First start assistant on an assistant panel 92
Setting up the drive parameters, and performing the first start 92
On-load checks 92

10. Fault tracing

Contents of this chapter 97
Warning and fault messages 97

11. Maintenance

Contents of this chapter 99
Maintenance intervals 99
Descriptions of symbols 100
Recommended annual maintenance actions by the user. 100
Recommended maintenance intervals after start-up 100
Cleaning the interior of the cabinet 100
Cleaning the air inlet (door) meshes (IP42 / UL Type 1 Filtered) 101
Replacing the air filters (IP54 / UL Type 12) 102
Inlet (door) filters (IP54 / UL Type 12) 102
Outlet (roof) filters (IP54 / UL Type 12) 102
Heatsink 103
Fans 103
Replacing the cabinet fan 104
Replacing the drive module main fans 105

Replacing the circuit board compartment cooling fan . . . 106
Replacing the IP54 (UL type 12) roof fan . . . 107
Replacing the drive module . . . 108
Capacitors . . . 115
Reforming the capacitors . . . 115
Control panel . . . 115
Cleaning the control panel . . . 115
Replacing the battery in the assistant control panel . . . 116

12. Technical data

Contents of this chapter . . . 117
Ratings . . . 117
Definitions . . . 118
Output derating . . . 118
Ambient temperature derating . . . 118
Altitude derating . . . 119
Deratings for special settings in the drive control program . . . 119
Dimensions and weights . . . 120
Free space requirements . . . 120
Losses, cooling data and noise . . . 121
Terminal and lead-through data for the power cables . . . 121
IEC . . . 121
Terminal data for the control cables . . . 124
Electrical power network specification . . . 125
Motor connection data . . . 125
Control unit connection data . . . 125
Efficiency . . . 125
Protection classes . . . 125
Ambient conditions . . . 126
Auxiliary circuit power consumption . . . 127
Materials . . . 127
CE marking . . . 128
Compliance with the European Low Voltage Directive . . . 128
Compliance with the European EMC Directive . . . 128
Compliance with the European Machinery Directive . . . 128
Applicable standards . . . 128
Declaration of Conformity (Safe torque off) . . . 129
Compliance with the EN 61800-3:2004 . . . 131
Definitions . . . 131
Category C3 . . . 131
Category C4 . . . 131
Cyber security disclaimer . . . 132
Disclaimer . . . 132

13. Dimension drawings

14. Safe torque off function

Contents of this chapter . . . 137
Description . . . 137
Compliance with the European Machinery Directive . . . 138
Wiring . . . 138

Activation switch . . . 138
Cable types and lengths . . . 138
Grounding of protective shields . . . 139
Single drive (internal power supply) . . . 139
Single drive (external +24 V DC power supply) . . . 140
Multiple drives (internal power supply) . . . 141
Multiple drives (external power supply) . . . 142
Operation principle . . . 143
Start-up including acceptance test . . . 143
Competence . . . 143
Acceptance test reports . . . 143
Acceptance test procedure . . . 143
Use . . . 144
Maintenance . . . 145
Competence . . . 145
Fault tracing . . . 145
Safety data (SIL, PL) . . . 146
Abbreviations . . . 147

15. Optional I/O extension modules

Contents of this chapter . . . 149
CHDI-01 115/230 V digital input extension module . . . 149
Safety instructions . . . 149
Hardware description . . . 149
Product overview . . . 149
Layout . . . 150
Mechanical installation . . . 150
Necessary tools and instructions . . . 150
Unpacking and checking the delivery . . . 150
Installing the module . . . 150
Electrical installation . . . 151
Warnings . . . 151
Necessary tools and instructions . . . 151
Terminal designations . . . 151
General cabling instructions . . . 151
Wiring . . . 151
Start-up . . . 152
Setting the parameters . . . 152
Diagnostics . . . 152
Faults and warning messages . . . 152
LEDs . . . 153
Technical data . . . 153
Dimension drawing: . . . 153
CMOD-01 multifunction extension module (external 24 V AC/DC and digital I/O) . . . 155
Safety instructions . . . 155
Hardware description . . . 155
Product overview . . . 155
Layout . . . 156
Mechanical installation . . . 156
Necessary tools and instructions . . . 156
Unpacking and checking the delivery . . . 156
Installing the module . . . 156
Electrical installation . . . 157

Warnings . . . 157
Necessary tools and instructions . . . 157
Terminal designations . . . 157
General cabling instructions . . . 157
Wiring . . . 157
Start-up . . . 159
Setting the parameters . . . 159
Diagnostics . . . 159
Faults and warning messages . . . 159
LEDs . . . 160
Technical data . . . 160
Dimension drawing: . . . 160
CMOD-02 multifunction extension module
(external 24 V AC/DC and isolated PTC interface) . . . 162
Safety instructions . . . 162
Hardware description . . . 162
Product overview . . . 162
Layout . . . 163
Mechanical installation . . . 163
Necessary tools and instructions . . . 163
Unpacking and checking the delivery . . . 163
Installing the module . . . 163
Electrical installation . . . 164
Warnings . . . 164
Necessary tools and instructions . . . 164
Terminal designations . . . 164
General cabling instructions . . . 164
Wiring . . . 164
Start-up . . . 165
Setting the parameters . . . 165
Diagnostics . . . 166
Faults and warning messages . . . 166
LEDs . . . 166
Technical data . . . 166
CPTC-02 ATEX-certified thermistor protection module,
(external 24 V AC/DC and isolated PTC interface) . . . 168

Further information

Product and service inquiries . . . 169
Product training . . . 169
Providing feedback on ABB Drives manuals . . . 169
Document library on the Internet . . . 169

1

Safety instructions

Contents of this chapter

This chapter contains the safety instructions which you must obey when you install and operate the drive and do maintenance on the drive. If you ignore the safety instructions, injury, death or damage can occur.

Use of warnings

Warnings tell you about conditions which can cause injury or death, or damage to the equipment. They also tell you how to prevent the danger. The manual uses these warning symbols:

	Electricity warning tells about hazards from electricity which can cause injury or death, or damage to the equipment.
	General warning tells about conditions, other than those caused by electricity, which can cause injury or death, or damage to the equipment.
	Electrostatic sensitive devices warning tells you about the risk of electrostatic discharge which can cause damage to the equipment.

General safety in installation, start-up and maintenance

These instructions are for all personnel that install the drive and do maintenance work on it.

WARNING! Obey these instructions. If you ignore them, injury or death, or damage to the equipment can occur.

- Secure the cabinet to the floor (see chapter *Mechanical installation*) to prevent it from toppling over when you pull out the module. The drive module is heavy and has a high center of gravity.
- Wear protective gloves and long sleeves. Some parts have sharp edges.
- Handle the drive module carefully:
  - Use safety shoes with a metal toe cap to avoid foot injury.
  - Lift the module with a lifting device only. Use the designated lifting points.

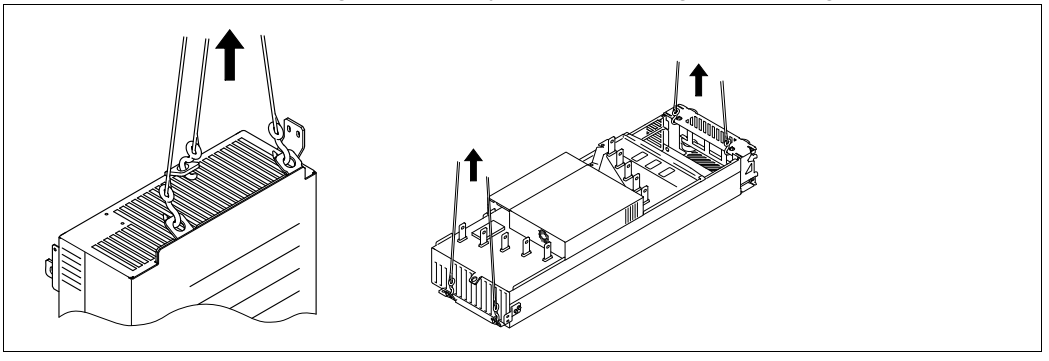

  - Make sure that the module does not topple over when you move it on the floor: Extend the support legs by pressing each leg a little down (1, 2) and turning it aside. Whenever possible secure the module also with chains.
  - Do not tilt the drive module (A). It is **heavy** and its **center of gravity is high.** The module overturns from a sideways tilt of 5 degrees. Do not leave the module unattended on a sloping floor.

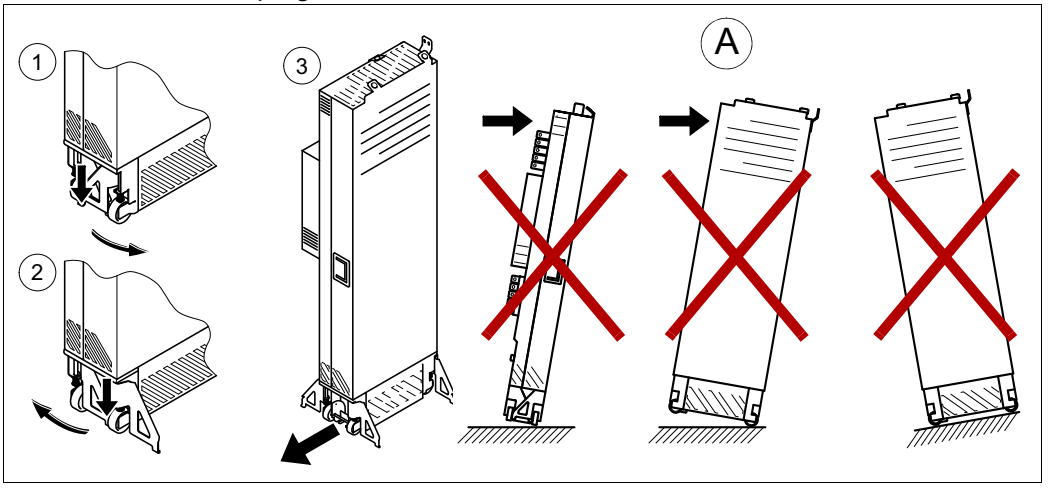

- Do not use the module installation ramp with plinth heights which exceed the maximum height (50 mm [1.97 in]) marked on the ramp.
- Secure the module installation ramp carefully.
- To prevent the drive module from falling, attach its top lifting lugs with chains to the cabinet lifting lug before you push the module into the cabinet and pull it from the cabinet. Work carefully preferably with help from another person as shown below. Keep a constant pressure with one foot on the base of the module to prevent the module from falling on its back.

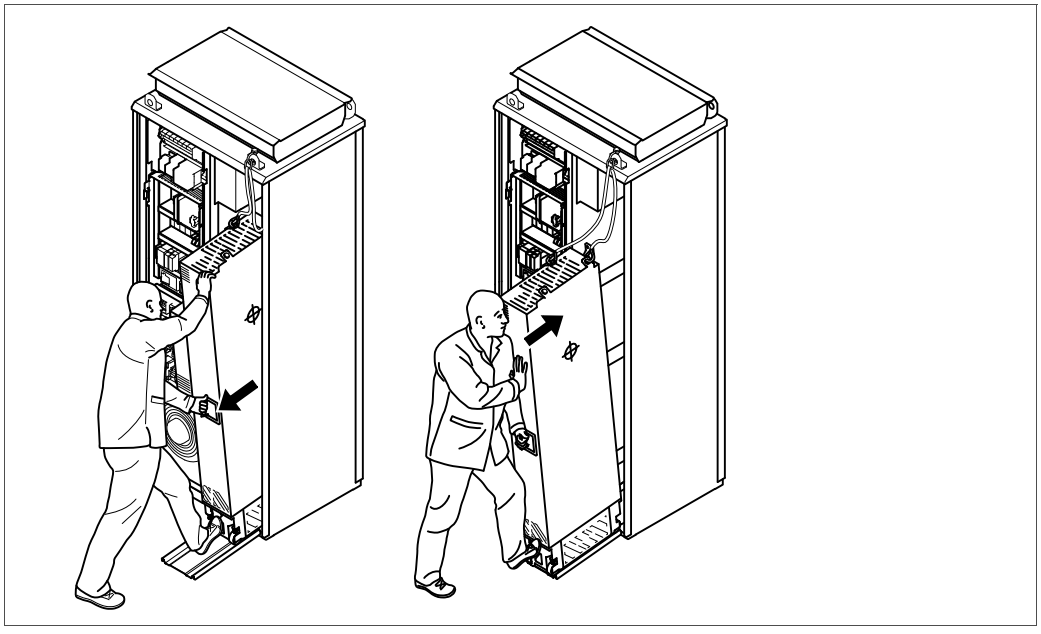

- Beware of hot surfaces. Some parts, such as heatsinks of power semiconductors, remain hot for a while after disconnection of the electrical supply.
- Keep the drive in its package or protect it otherwise from dust and burr from drilling and grinding until you install it. Protect also the installed drive against dust and burr. Electrically conductive debris inside the drive can cause damage or malfunction.
- Vacuum clean the area below the drive before the start-up to prevent the drive cooling fan from drawing the dust inside the drive.
- Make sure that there is sufficient cooling. See section *Examining the installation site* on page *39*.
- Before you connect voltage to the drive, make sure that the cabinet doors are closed. Keep the doors closed during the operation.
- Before you adjust the drive operation limits, make sure that the motor and all driven equipment can operate throughout the set operation limits.
- Before you activate the automatic fault reset or automatic restart functions of the drive control program, make sure that no dangerous situations can occur. These functions reset the drive automatically and continue operation after a fault or supply break.
- The maximum number of drive power-ups is five in ten minutes. Too frequent power-ups can damage the charging circuit of the DC capacitors.
- Make sure that any safety circuits (for example, emergency stop and Safe torque off) are validated in start-up. For the Safe torque off, see chapter *Safe torque off function* on page *137*. For other safety functions, see their separate instructions.

Note:

- If you select an external source for start command and it is on, the drive will start immediately after fault reset unless you configure the drive for pulse start. See the firmware manual.
- When the control location is not set to Local, the stop key on the control panel will not stop the drive.
- Only authorized persons are allowed to repair a malfunctioning drive.

Electrical safety in installation, start-up and maintenance

Precautions before electrical work

These warnings are for all personnel who do work on the drive, motor cable or motor.

WARNING! Obey these instructions. If you ignore them, injury or death, or damage to the equipment can occur. If you are not a qualified electrician, do not do installation or maintenance work. Go through these steps before you begin any installation or maintenance work.

1. Clearly identify the work location.
2. Disconnect all possible voltage sources.
   - Open the main switch-disconnector (Q1) of the drive.
   - Open the disconnector of the supply transformer as the main switch-disconnector (Q1) of the drive does not remove the voltage from the input busbars of the drive.
   - Make sure that reconnection is not possible. Lock the disconnectors to open position and attach a warning notice to them.
   - Disconnect any external power sources from the control circuits before you do work on the control cables.
   - After you disconnect the drive, always wait 5 minutes to let the intermediate circuit capacitors discharge before you continue.
3. Protect any other energized parts in the work location against contact.
4. Take special precautions when close to bare conductors.
5. Measure that the installation is de-energized.
   - Use a multimeter with an impedance of at least 1 Mohm.
   - Make sure that the voltage between the drive input power terminals (L1, L2, L3) and the grounding (PE) busbar is close to 0 V.
6. Install temporary grounding as required by the local regulations.
7. Ask for a permit to work from the person in control of the electrical installation work.

Additional instructions and notes

WARNING! Obey these instructions. If you ignore them, injury or death, or damage to the equipment can occur.

- If you are not a qualified electrician, do not do installation or maintenance work.
- Do not connect the drive to a voltage higher than what is on the type designation label. If you do, the brake chopper starts to operate which causes the overheating of the brake resistor (if present). Overvoltage can also cause the motor to rush to its maximum speed.
- We do not recommend that you secure the cabinet by arc welding. If you have to, obey the instructions in section *Arc welding* on page *48*.
- Do not do insulation or voltage withstand tests on the drive or drive modules.

Note:

- The motor cable terminals of the drive are at a dangerous voltage when the input power is on, regardless of whether the motor is running or not.
- External wiring can supply dangerous voltages to the terminals of relay outputs (XRO1, XRO2 and XRO3).
- The Safe torque off function does not remove the voltage from the main and auxiliary circuits. The function is not effective against deliberate sabotage or misuse.

WARNING! Use a grounding wrist band when you handle the printed circuit boards. Do not touch the boards unnecessarily. The boards contain components sensitive to electrostatic discharge.

WARNING! Obey these instructions. If you ignore them, equipment malfunction and damage to the fiber optic cables can occur.

- Handle the fiber optic cables with care.
- When you unplug the cables, always hold the connector, not the cable itself.
- Do not touch the ends of the fibers with bare hands as the ends are extremely sensitive to dirt.
- Do not bend the fiber optic cables too tightly. The minimum allowed bend radius is 35 mm (1.4 in).

Grounding

These instructions are for all personnel who are responsible for the grounding of the drive.

WARNING! Obey these instructions. If you ignore them, injury or death and equipment malfunction can occur, and electromagnetic interference can increase.

- If you are not a qualified electrician, do not do grounding work.
- Always ground the drive, the motor and adjoining equipment. This is necessary for the personnel safety. Proper grounding also reduces electromagnetic emission and interference.
- Make sure that the conductivity of the grounding conductors is sufficient. See section *Selecting the power cables* on page *53*. Obey the local regulations.
- Connect the power cable shields to protective earth (PE) of the drive to make sure of personnel safety.
- Make a 360° grounding of the power and control cable shields at the cable entries to suppress electromagnetic disturbances.
- In a multiple-drive installation, connect each drive separately to the protective earth (PE) busbar of the switch board or the transformer.

Note:

- You can use power cable shields as grounding conductors only when their conductivity is sufficient.
- As the normal touch current of the drive is higher than 3.5 mA AC or 10 mA DC, you must use a fixed protective earth connection. See standard EN 61800-5-1, 4.3.5.5.2.

Additional instructions for permanent magnet motor drives

Safety in installation, start-up and maintenance

These are additional warnings concerning permanent magnet motor drives. The other safety instructions in this chapter are also valid.

WARNING! Obey these instructions. If you ignore them, injury or death and equipment malfunction can occur.

- Do not do work on the drive when the permanent magnet motor is rotating. A rotating permanent magnet motor energizes the drive including its input power terminals.

Before installation, start-up and maintenance work on the drive:

- Stop the motor.
- Disconnect the motor from the drive with a safety switch or by other means.
- If you cannot disconnect the motor, make sure that the motor cannot rotate during work. Make sure that no other system, like hydraulic crawling drives, can rotate the motor directly or through any mechanical connection like felt, nip, rope, etc.
- Measure that the installation is de-energized.
  - Use a multimeter with an impedance of at least 1 Mohm.
  - Make sure that the voltage between the drive output terminals (U2, V2, W2) and the grounding (PE) busbar is close to 0 V.
  - Make sure that the voltage between the drive input power terminals (L1, L2, L3) and the grounding (PE) busbar is close to 0 V.
- Install temporary grounding to the drive output terminals (U2, V2, W2). Connect the output terminals together as well as to the PE.
- Make sure that the operator cannot run the motor over the rated speed. Motor overspeed causes overvoltage can damage or explode the capacitors in the intermediate circuit of the drive.

2

Introduction to the manual

Contents of this chapter

This chapter describes the manual. It contains a flowchart of steps in checking the delivery, installing and starting up the drive. The flowchart refers to chapters/sections in this manual and to other manuals.

Target audience

This manual is intended for people who plan the installation, install, start up, use and service the drive. Read the manual before you work on the drive. You are expected to know the fundamentals of electricity, wiring, electrical components and electrical schematic symbols.

The manual is written for readers worldwide. Both SI and imperial units are shown.

Contents of the manual

This manual contains the instructions and information for the basic drive configuration. The chapters of the manual are briefly described below.

Safety instructions gives safety instructions for the installation, start-up, operation and maintenance of the drive.

Introduction to the manual gives an introduction to this manual.

Operation principle and hardware description describes the operation principle and constructions of the drive.

Mechanical installation describes how to install the drive mechanically.

Guidelines for planning the electrical installation contains instructions for the motor and cable selection, protections and cable routing.

Electrical installation gives instructions on wiring the drive.

Control unit contains the default I/O connection diagram and references for the descriptions of the terminals and technical data of the control unit.

Installation checklist contains a list for checking the mechanical and electrical installation of the drive.

Start-up describes the start-up procedure of the drive.

Fault tracing describes the fault tracing possibilities of the drive.

Maintenance contains preventive maintenance instructions.

Technical data contains the technical specifications of the drive, eg, the ratings, sizes and technical requirements, provisions for fulfilling the requirements for CE and other markings.

Dimension drawings contains example dimension drawings of the drive.

Safe torque off function describes the Safe torque off function of the drive and gives instructions on its implementing.

Optional I/O extension modules describes optional IO extension modules, their installation, start-up, diagnostics and technical data.

Related manuals

See *List of related manuals* on the inside of the front cover.

Categorization by frame size and option code

Some instructions, technical data and dimension drawings which concern only certain frame sizes are marked with the symbol of the frame size (R10 or R11) The frame size is marked on the type designation label, see page *34*.

The instructions, technical data and dimension drawings which concern only certain optional selections are marked with option codes (such as +L504). The options included in the drive can be identified from the option codes visible on the type designation label. The option selections are listed in section *Type designation key* on page *35*.

Quick installation, start-up and operating flowchart

Task	See
Plan the electrical installation and acquire the accessories needed (cables, fuses, etc.). Check the ratings, required cooling air flow, input power connection, compatibility of the motor, motor connection, and other technical data.	*Guidelines for planning the electrical installation* (page *49*) *Technical data* (page *117*)
↓	
Check the installation site.	*Ambient conditions* (page *126*)
↓	

Task	See
Unpack and check the units (only intact units may be started up). Examine that all necessary option modules and equipment are present and correct. Mount the drive.	*Mechanical installation* (page *39*) If the drive has been non-operational for more than one year, the converter DC link capacitors need to be reformed (page *115*)
↓	
Route the cables.	*Routing the cables* (page *56*)
↓	
Check the insulation of the supply cable, the motor and the motor cable.	*Checking the insulation of the assembly* (page *65*)
↓	
Connect the power cables. Connect the control cables.	*Connecting the power cables* (page *67*), *Connecting the control cables* (page *71*),
↓	
Check the installation.	*Installation checklist* (page *89*)
↓	
Start the drive up.	*Start-up* (page *91*)
↓	
Operate the drive: start, stop, speed control etc.	*Start-up* (page *91*) and firmware manual

Terms and abbreviations

Term/ Abbreviation	Explanation
EMC	Electromagnetic compatibility
FCAN-01	Optional FCAN-01 CANopen adapter module
FCNA-01	Optional ControlNet™ adapter module
FDCO-01	Optional DDCS communication module with two pairs of 10 Mbit/s DDCS channels
FDNA-01	Optional DeviceNet™ adapter module
FECA-01	Optional EtherCAT adapter module
FEPL-01	Optional Ethernet POWERLINK adapter module
FENA-11	Optional Ethernet adapter module for EtherNet/IP™, Modbus TCP and PROFINET IO protocols
FENA-21	Optional Ethernet adapter module for EtherNet/IP™, Modbus TCP and PROFINET IO protocols, 2-port
FPBA-01	Optional PROFIBUS DP adapter module
Frame (size)	Physical size of the drive
IGBT	Insulated gate bipolar transistor; a voltage-controlled semiconductor type widely used in drives due to their easy controllability and high switching frequency.

Term/ Abbreviation	Explanation
I/O	Input/Output
CCU-12	Drive control unit. As standard, the external I/O control signals are connected to the control unit, or optional I/O extensions mounted on it.
CEIA-01	Embedded EIA-485 fieldbus adapter module
CHDI-01	Optional 115/230 V digital input extension module
CMOD-01	Optional multifunction extension module (external 24 V AC/DC and digital I/O extension)
CMOD-02	Optional multifunction extension module (external 24 V AC/DC and isolated PTC interface)
CPTC-02	Optional ATEX-certified thermistor protection module
R10, R11	Frame size designation of the drive
STO	Safe torque off

3

Operation principle and hardware description

Contents of this chapter

This chapter briefly describes the operation principle and construction of the drive.

Product overview

The ACS580-07 is an air-cooled cabinet-installed drive for controlling asynchronous AC induction motors and permanent magnet motors.

Single-line circuit diagram of the drive

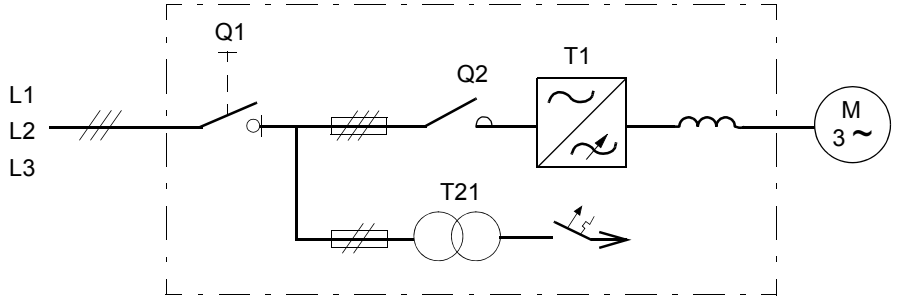

Q1	Switch-disconnector
Q2	Optional line contactor (+F250)
T21	Auxiliary voltage transformer supplying 24 V and 230/115 V control voltage for, eg, cabinet fan(s), control devices and I/O extension adapter module.
T1	Drive module with common mode filter
R12	Optional du/dt filter (+E205)

General information on the cabinet layout

IP42
UL Type 1 Filtered

IP54
UL Type 12

Cabinet layout – bottom entry and exit of cables

The cabinet layout is shown below. See also the next page.

A – Main breaker and power cabling cubicle		B – Drive module cubicle	
1	Drive control panel	-	See the next page.
2	Operating switch	-	-
3	Main switch handle	-	-
4	Buffering module	-	-
5	Swing-out frame	-	-
6	Mounting plate with connection terminals for cabinet heater (option +G300)	-	-
7	Cabinet fan		

The cabinet layout without shrouds, with the swing-out frame open is shown below.

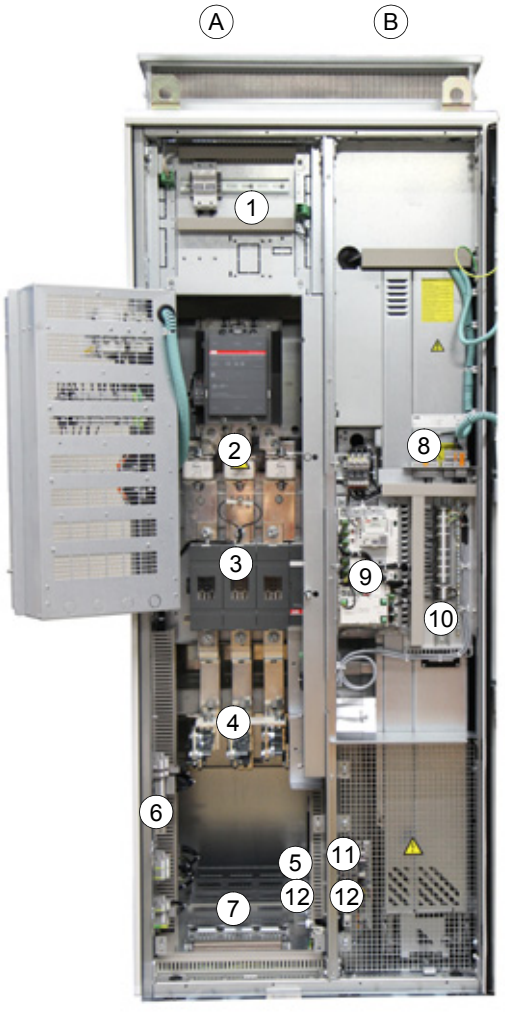

A – Main breaker and power cabling cubicle		B – Drive module cubicle	
1	Main fuses for control devises, IP54 fan transformer (with option +B055)	8	Drive module
2	AC fuses	9	Control unit, see page *79*.
3	Main switch-disconnector	10	Optional terminal block for control unit connections (X504, option +L504)
4	Input and motor cable connection terminals	11	Auxiliary voltage transformer (T21)
5	PE-terminal	12	Cabinet heater
6	Connection terminals for options +F250 and +Q951. See page *30*.	-	-
7	Power and control cable lead-throughs	-	-

Overview of power and control connections

The diagram shows the power connections and control interfaces of the drive.

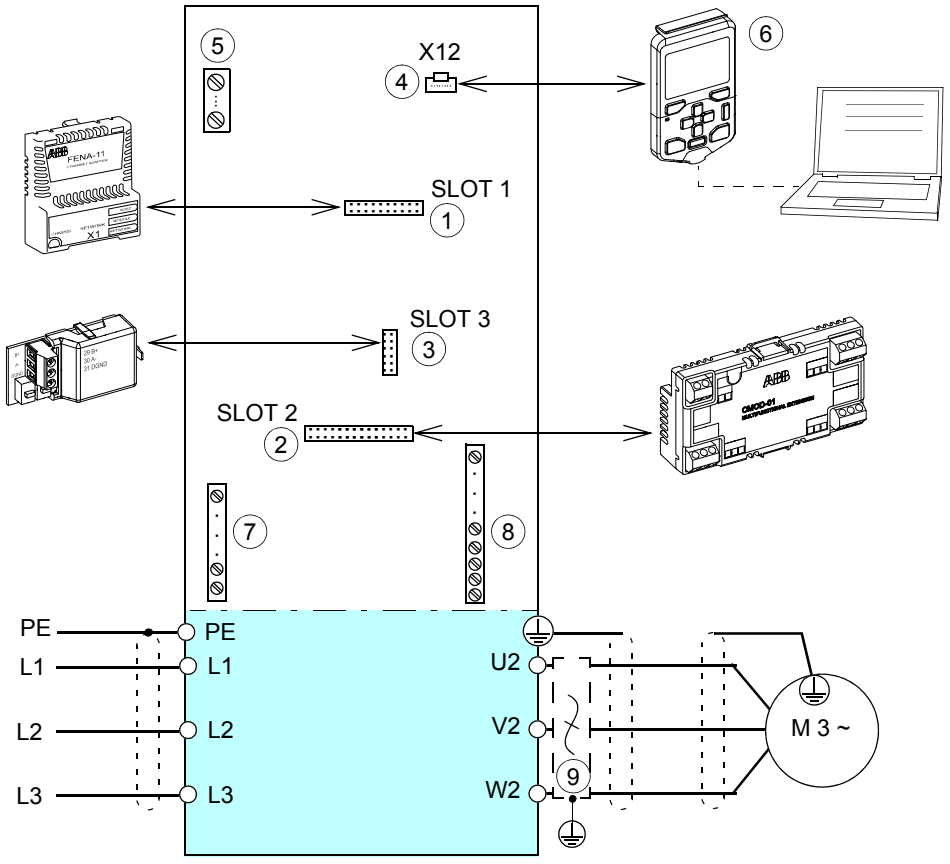

1	Option slot 1 for optional fieldbus adapter modules
2	Option slot 2 for optional I/O extension modules
3	Option slot 3 for optional embedded fieldbus adapter modules
4	Panel port
5	I/O terminal blocks. See section *Layout* on page *80* and section *Default I/O connection diagram* on page *81*.
6	Control panel, see page *32*.
7	Connection terminals for options, see page *30*.
8	Additional terminal block X504 for control cable connections to the control unit (option +L504), see page *34*.
9	d*u*/d*t* (option +E205), see page *33*.

The layout of external control connection terminals at the side of the drive cabinet is shown below. The composition depends on the options selected.

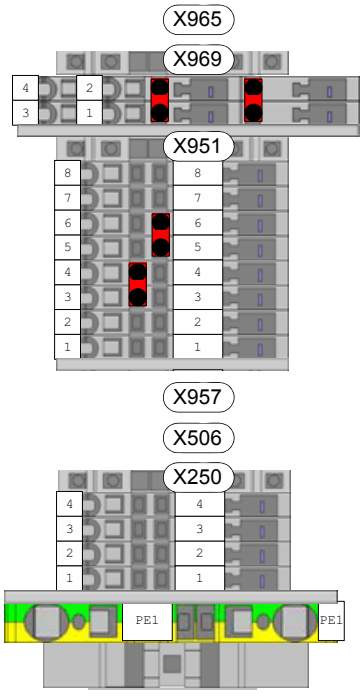

	Terminals for
X250	Auxiliary contacts of optional line contactor (+F250)
X506	Not in use
X951	Push buttons for emergency stop option +Q951
X957	Not in use
X965	Not in use
X969	External STO customer connection for safety option +Q951

Door switches and lights

	Label in English	Label in local language	Description
1	READY	-	Ready pilot light (option +G327)
2	RUN	-	Run pilot light (option+G328)
3	FAULT	-	Fault pilot light (option +G329)
4	MAIN CONT. OFF ON 	-	Operating switch with option +F250 0 Opens the main contactor (Q2) and disables starting of the drive 1 Closes the main contactor (Q2)
5	EMERGENCY STOP RESET	-	Emergency stop reset push button with option +Q951
6	EMERGENCY STOP	-	Emergency stop push button with option +Q951

The layout depends on the options selected.

Main switch-disconnector Q1

The switch-disconnector handle switches the main voltage to the drive on and off.

Control panel

The ACS-AP-S is the user interface of the drive. It provides the essential controls such as Start/Stop/Direction/Reset/Reference, and the parameter settings for the control program.

One control panel can be used to control several drives through a panel link.

The control panel can be removed by pulling it forward from the top edge and disconnecting the panel cable. The panel is reinstalled in reverse order. For the use of the control panel, see the firmware manual or *ACS-AP-X assistant control panel user's manual* (3AUA0000085685 [English]).

Control by PC tools

There is a USB connector on the front of the panel that can be used to connect a PC to the drive. When a PC is connected to the control panel, the control panel keypad is disabled.

Common mode filter

The drive is equipped with a common mode filter as standard. The filter contains ferrite rings mounted around the drive AC busbars. The filter protects the motor bearings by reducing the bearing currents.

More information on when the option is required: See section *Examining the compatibility of the motor and drive* on page *50*.

Descriptions of cabinet options

Note: All options are not available for all drive types, do not coexist with certain other options, or may require additional engineering. Check actual availability with ABB.

Degree of protection

Definitions

According to IEC/EN 60529, the degree of protection is indicated by an IP code where the first numeral means protection against ingress of solid foreign objects, and the second numeral protection against ingress of water. The IP codes of the standard cabinet and options covered in this manual are defined below.

IP code	The equipment is protected …	
	First numeral	Second numeral
IP42	against ingress of solid foreign objects ≥ 1 mm	against dripping (15° tilting) water
IP54	dust-protected	against splashing water

IP42 and UL Type 1 Filtered (standard)

The air inlet gratings are covered with a metallic mesh between the inner metallic grating and the outer plastic grating.

IP54 and UL Type 12 (option +B055)

This option provides the degree of protection of IP54 (UL type 12). It equips the cabinet air inlets with filter housings containing folded board air filter mats between the inner metallic grating and the outer plastic grating. An additional fan on the cabinet roof is included.

Empty cubicles (options +C196 to +C201)

These options provide an empty cubicle to the drive cabinet:

- on the right-hand side of the converter cubicle (400 mm wide with option +C196, 600 mm wide with option +C197 and 800 mm wide with option +C198)
- on the left-hand side of the converter cubicle (400 mm wide with option +C199, 600 mm wide with option +C200 and 800 mm wide with option +C201).

du/dt filter (option +E205)

The du/dt filter protects the motor insulating system by reducing the voltage rise speed at the motor terminals. The filter also protects the motor bearings by reducing the bearing currents.

More information on when the option is required: See section *Examining the compatibility of the motor and drive* on page *50*.

Cabinet heater with external supply (option +G300)

The option contains:

- 50 W heating elements in the cubicles where needed
- load switch for providing electrical isolation during service
- miniature circuit breaker for overcurrent protection
- terminal block for external power supply.

The heater prevents humidity condensation inside the cabinet when the drive is not running. The power output of the semiconductor-type heating elements depends on the environmental temperature. The customer must switch the heating off when it is not needed by cutting the supply voltage off.

The customer must supply the heater from an external 110…240 V AC power source.

See also

- *Connecting the external power supply cables for the cabinet heater and lighting and motor heater (options +G300)*
- *Auxiliary circuit power consumption* on page *127*
- circuit diagrams delivered with drive for the actual wiring.

UK gland/conduit plate (option +H358)

The option provides US/UK conduit plates (plain 3 mm thick steel plates without any ready-made holes).

Additional terminal block X504 (option +L504)

The standard terminal blocks of the drive control unit are wired to the additional terminal block at the factory for customer control wiring. The terminals are spring loaded.

Cables accepted by the terminals:

- solid wire 0.08 to 4 mm^2 (28 to 12 AWG)
- stranded wire with ferrule 0.14 to 2.5 mm^2 (24 to 14 AWG)
- stranded wire without ferrule 0.08 to 2.5 mm^2 (28 to 14 AWG).

Stripping length: 10 mm (0.5 in).

Note: The option modules inserted in the slots of the control unit are not wired to the additional terminal block. The customer must connect the option module control wires directly to the modules.

Type designation label

The type designation label includes an IEC rating, appropriate markings, a type designation and a serial number, which allow identification of each unit. The type designation label is located on the front cover. An example label is shown below.

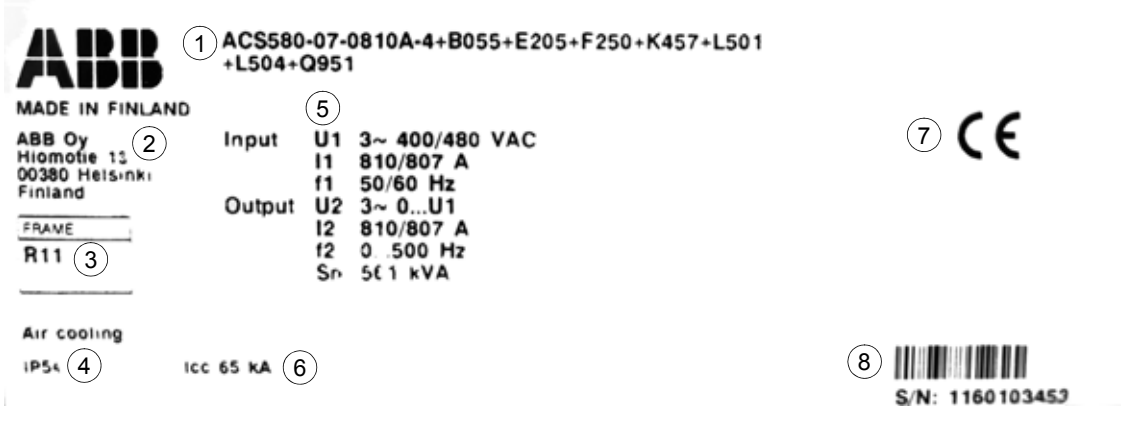

No.	Description
1	Type designation, see section *Type designation key* below.
2	Manufacturing address
3	Frame size
4	Degree of protection
5	Ratings, see section *Ratings* on page *117*, *Electrical power network specification* on page *125* and *Motor connection data* on page *125*.
6	Short-circuit withstand strength, see section *Electrical power network specification* on page *125*.

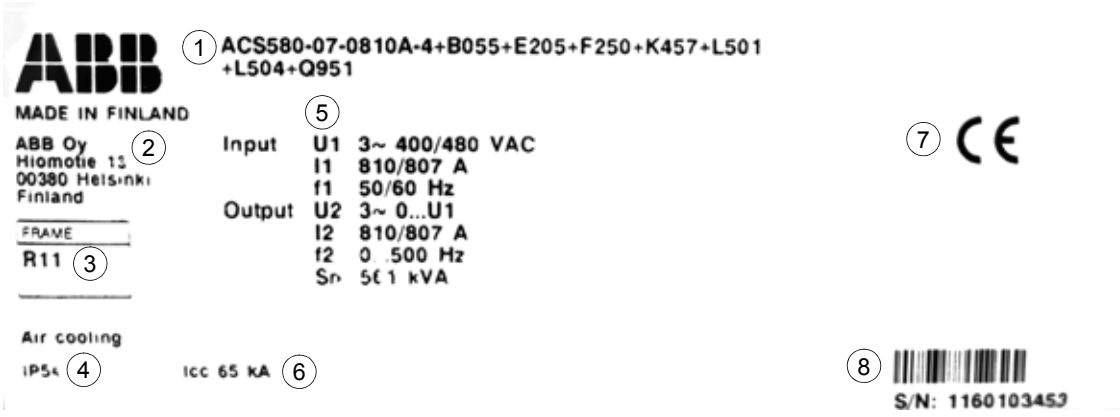

No.	Description
7	Valid markings
8	Serial number. The first digit of the serial number refers to the manufacturing plant. The next four digits refer to the unit's manufacturing year and week, respectively. The remaining digits complete the serial number so that there are no two units with the same number.

Type designation key

The type designation contains information on the specifications and configuration of the drive. The first digits from left express the basic configuration (eg, ACS580-07-0640A-4). The optional selections are given thereafter, separated by plus signs, eg, +B055. The main selections are described below. Not all selections are available for all types or with all options. For more information, refer to *ACS580-07 Ordering Information* (3AXD10000451087 available on request).

Code	Description
Basic codes	
ACS580	Product series
07	When no options are selected: cabinet-installed drive, IP42 (UL Type 1), main switch-disconnector, AC fuses, ACS-AP-S assistant control panel, EMC filtering for second environment TN and IT (grounded and ungrounded) systems (category C3), input AC choke, common mode filter, coated boards, ACS580 control program, RS-485 Modbus RTU adapter module (CEIA-01), Safe torque off function, bottom entry and exit of cables, multilingual device label sticker, USB memory stick containing circuit diagrams and all manuals.
Size	
xxxx	Refer to the rating tables, page *117*
Voltage range	
4	380…480 V. This is indicated in the type designation label as typical input voltage level 3 ~ 400/480 V AC.
Option codes (plus codes)	
Degree of protection	
B055	IP54 (UL Type 12)
Construction	
C196	Empty cabinet 400 mm on the right-hand side
C197	Empty cabinet 600 mm on the right-hand side
C198	Empty cabinet 800 mm on the right-hand side
C199	Empty cabinet 400 mm on the left-hand side
C200	Empty cabinet 400 mm on the left-hand side
C201	Empty cabinet 400 mm on the left-hand side

Code	Description
Filters	
E205	du/dt filter (page 33)
Line options	
F250	Line contactor
Heaters and auxiliary control voltage	
G300	Cabinet heater (external supply). See page 33.
Lights	
G327	Ready pilot light, white
G328	Run pilot light, green
G329	Fault pilot light, red
Cabling	
H351	Top entry of cables
H353	Top exit of cables
H358	Cable conduit entry. See page 34.
Control panel	
J429	ACS-AP-W Assistant control panel with Bluetooth interface
Fieldbus adapters	
K451	FDNA-01 DeviceNet™ adapter module
K454	FPBA-01 PROFIBUS DP adapter module
K457	FCAN-01 CANopen adapter module
K458	FSCA-01 RS-485 adapter module
K462	FCNA-01 ControlNet™ adapter module
K469	FECA EtherCat adapter module
K470	FEPL EtherPOWERLINK adapter module
K473	FENA-11 Ethernet adapter module for EtherNet/IP™, Modbus TCP and PROFINET IO protocols
K475	FENA-21 Ethernet adapter module for EtherNet/IP™, Modbus TCP and PROFINET IO protocols, 2-port
I/O extensions and feedback interfaces	
L501	CMOD-01 external 24 V DC/AC and digital I/O extension module (two relay outputs and one digital output)
L504	Additional I/O terminal block
L512	CHDI-01 115/230 V digital input extension module (six digital inputs and two relay outputs)
L523	CMOD-02 external 24 V and isolated PTC interface
L537	CPTC-02 ATEX-certified thermistor protection module
Specialties	
P904	Extended warranty
P912	Seaworthy packing
P929	Container packing
Safety functions	
Q951	Emergency stop of Category 0 with opening the main contactor or breaker
Q971	ATEX-certified Safe disconnection function, EX II (2) GD. Requires +L537.
Printed documentation (manuals, dimensional drawings, circuit diagrams and manual language). **Note:** The delivered manual set may include manuals in English if the translation is not available.	
R700	English
R701	German
R702	Italian

Code	Description
R703	Dutch
R704	Danish
R705	Swedish
R706	Finnish
R707	French
R708	Spanish
R709	Portuguese
R711	Russian

4

Mechanical installation

Contents of this chapter

This chapter describes the mechanical installation procedure of the drive.

Examining the installation site

Examine the installation site:

- The installation site is sufficiently ventilated or cooled to transfer away the drive losses. [1)]
- The ambient conditions of the drive meet the specifications. [1)]
- The wall behind the unit is of non-flammable material.
- There is enough free space above the drive to enable cooling air flow, service and maintenance.
- The floor that the unit is installed on is of non-flammable material, as smooth as possible, and strong enough to support the weight of the unit. Check the floor flatness with a spirit level. The maximum allowed deviation from the surface level is 5 mm (0.2 in) in every 3 meters (10 ft). Level the installation site, if necessary, as the cabinet is not equipped with adjustable feet.

[1)] The heat losses and ambient conditions are specified in chapter *Technical data*.

Note: For easy maintenance, do not install the drives on a higher level than the floor in front of it. Otherwise the ramp supplied with the drive cannot be used when replacing the drive modules that run on wheels.

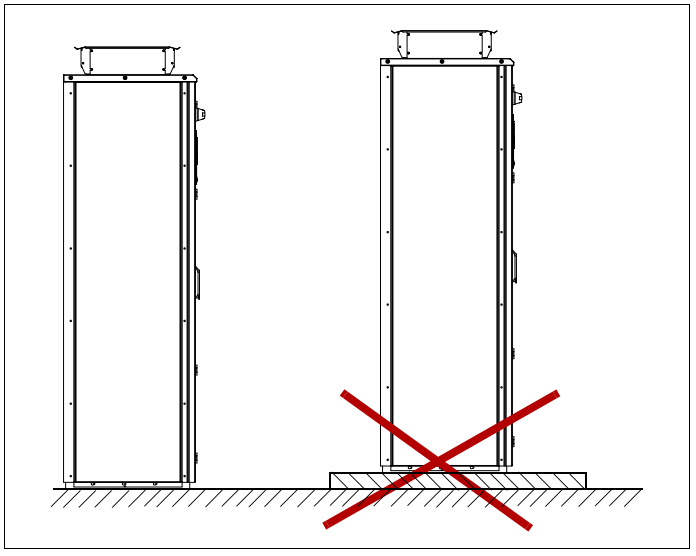

Necessary tools

The tools required for moving the unit to its final position, fastening it to the floor and wall and tightening the connections are listed below:

- crane, fork-lift or pallet truck (check load capacity!), iron bar, jack and rollers
- Pozidriv and Torx (2.5…6 mm) screwdrivers
- torque wrench
- set of wrenches or sockets.

Moving and unpacking the drive

Move the drive in its original pallet, preferably in the original package to installation site as shown below to avoid damaging the cabinet surfaces and door devices. When you use a pallet truck, check its load capacity before you move the drive.

Note: Transportation of the cabinet on its back is only allowed if it is packed for such transportation at the factory.

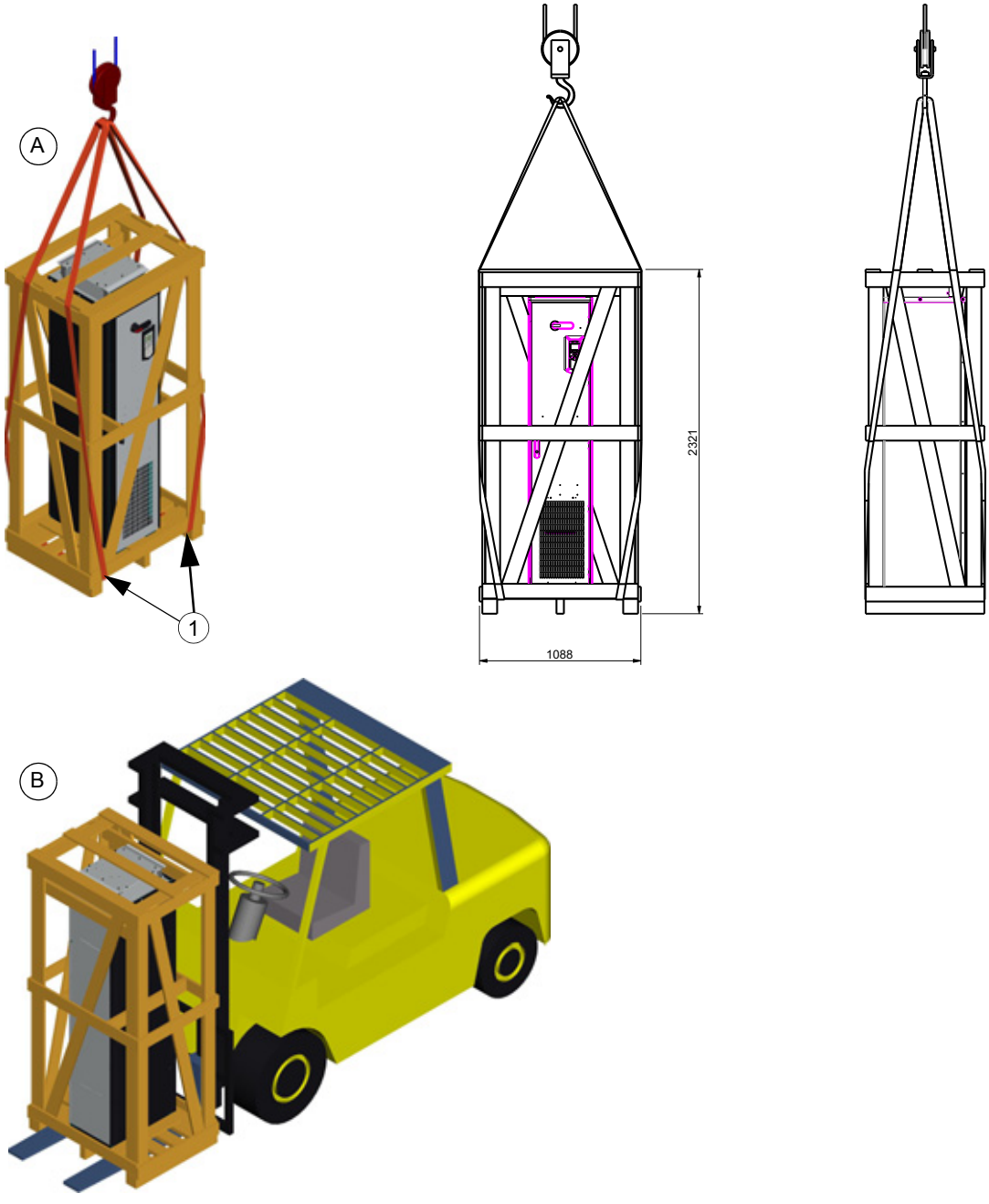

A	Lifting the transport package with slings
1	Lifting points
B	Lifting the transport package with forklift

Unpacking the transport package

Unpack the transport package as follows:

1. Undo the screws that hold the wooden elements of the transport crate together.
2. Remove the elements.
3. Remove the clamps with which the drive cabinet is mounted onto the transport pallet by undoing the fastening screws.
4. Remove the plastic wrapping.
5. After checking the delivery (see section *Checking the delivery* on page *42*), lift the drive cabinet to its installation place (see section *Lifting the cabinet* on page *43*).

Checking the delivery

The drive delivery contains:

- drive cabinet line-up
- option modules (if ordered) installed onto the control unit at the factory
- appropriate drive and option module manuals
- delivery documents.

Check that there are no signs of damage. Before attempting installation and operation, check the information on the type designation labels of the drive to verify that the delivery is of the correct type. See section *Type designation key* on page *35*.

Lifting the cabinet

Lift the drive cabinet using its lifting lugs. Maximum allowed lifting angle of IP42 (UL Type 1 Filtered) cabinets is 20°. Allowed minimum height of lifting slings of IP54 (UL Type 12) cabinets is 2 meters (6.5 ft).

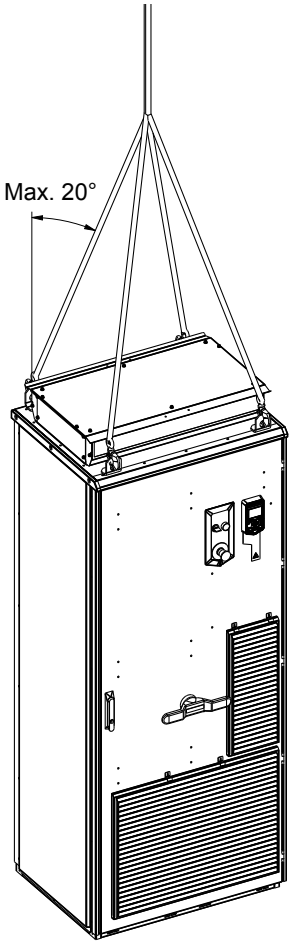

IP42
UL Type 1 Filtered

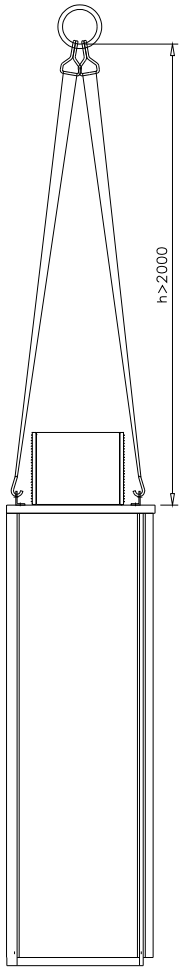

IP54
UL Type 12

Moving the cabinet after unpacking

Move drive cabinet carefully in the upright position. Avoid tilting. The center of gravity of the cabinet is high.

Laying the cabinet on its back

If the cabinet needs to be laid on its back, support it from below beside the cubicle seams. 1) cabinet back panel; 2) support.

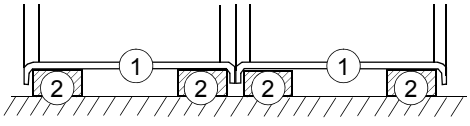

Moving on rollers

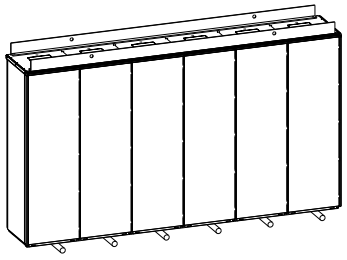	Lay the cabinet on the rollers and move it carefully until close to its final location. Remove the rollers by lifting the unit with a crane, fork-lift, pallet truck or jack.

Final placement

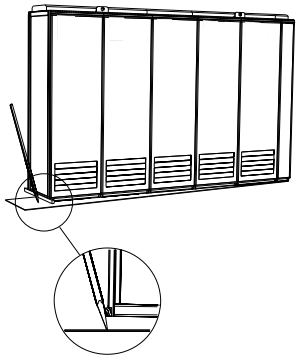	Move the cabinet into its final position with an iron bar. Place a wooden piece at the bottom edge of the cabinet in order not to damage the cabinet frame with the iron bar.

Installing the IP54 roof

If the roof of an IP54 cabinet is delivered in a separate package, install the roof as follows.

1. Undo the mounting screws of the front top profile of the cabinet and remove it. Undo the back mounting screws of the roof from the cabinet top.
2. Connect the power supply wires to the fan.
3. Install the front top profile of the cabinet in reverse order to step 1.
4. Attach the back mounting screws of the roof.

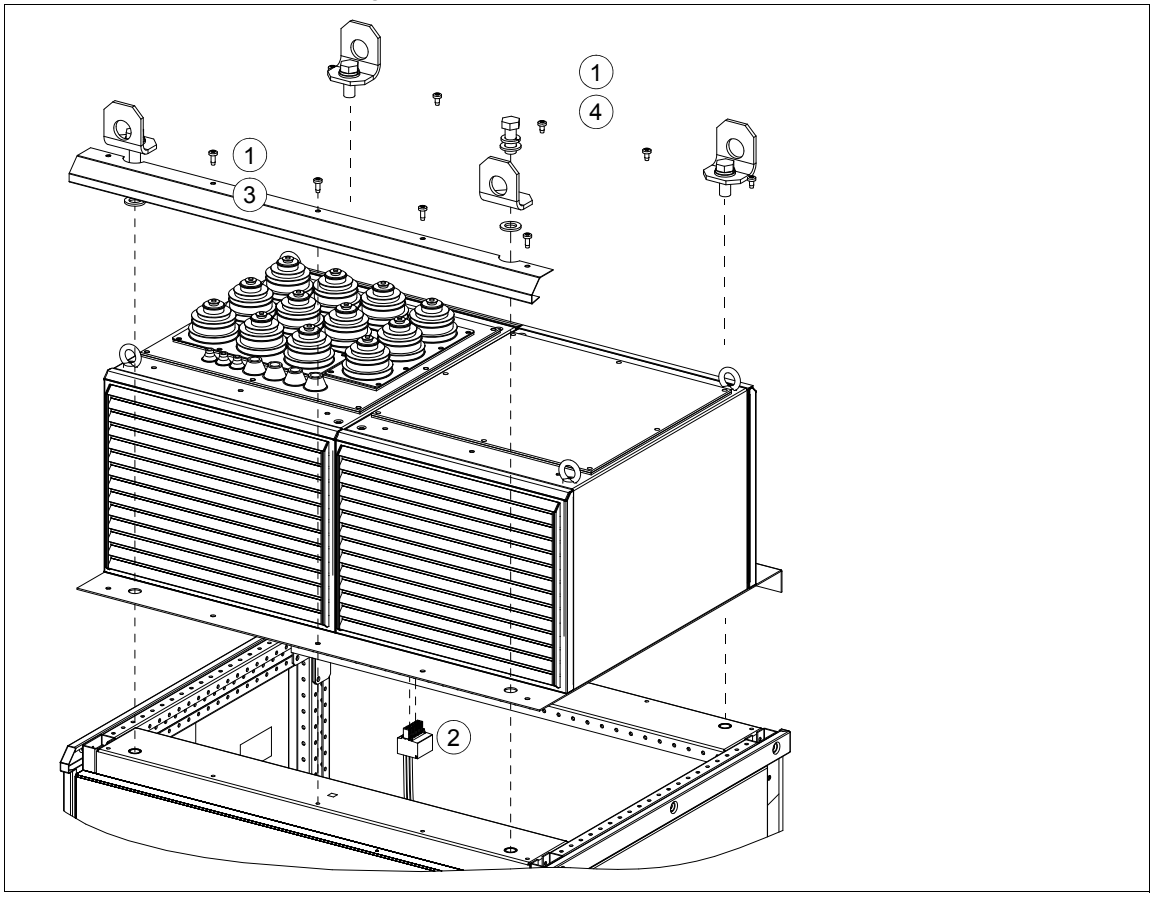

Attaching the cabinet to the floor and wall or roof

General rules

- Install the drive cabinet in an upright vertical position with its back against a wall (a), or back-to-back with another cabinet (b).
- Leave 400 mm (15.75 in) free space above the basic roof level of the cabinet for cooling. IP54 (UL Type 12) fan replacement requires 320 mm (12.6 in) free space above.
- Leave some space at the side where the cabinet outmost hinges are to allow the doors to open sufficiently (w). The doors must open 120° to allow the drive module replacement.

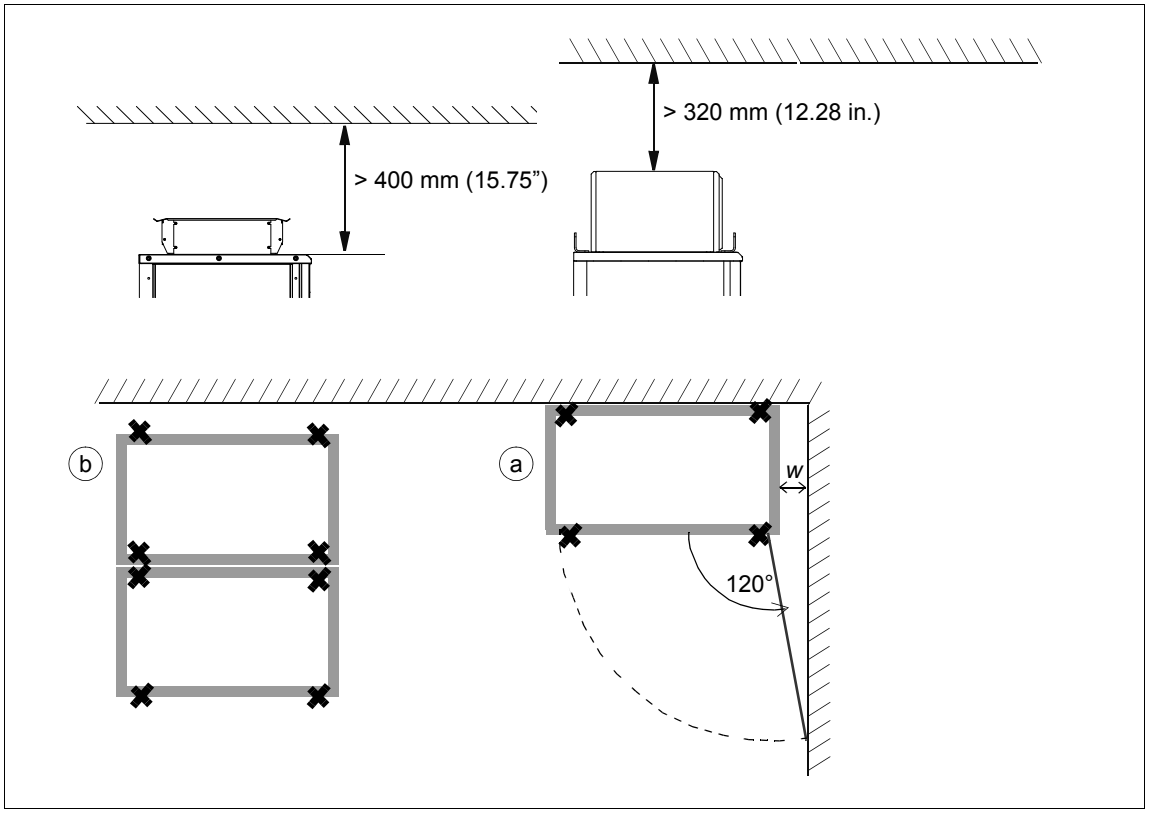

Note 1: Make height adjustments before attaching the cabinet with metal shims between the cabinet bottom and the floor.

Note 2: If you remove the lifting eyes, attach the bolts back to retain the degree of protection of the cabinet.

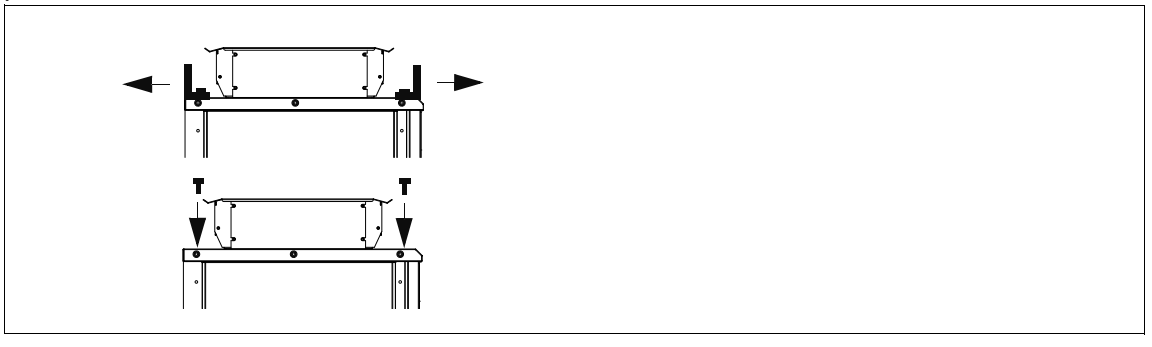

Attaching methods

Attach the cabinet to the floor from the front and rear edge by using clamps delivered with the drive, or bolt the cabinet to the floor through the holes inside if they are accessible.

Alternative 1 – Clamping

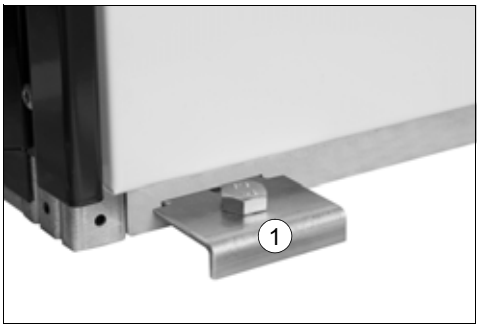

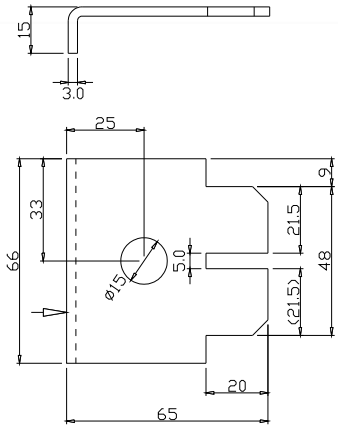

Clamp dimensions

1. Insert the clamps into the twin slots along the front and rear edges of the cabinet frame body and attach them to the floor with a bolt. The recommended maximum distance between the clamps in the front edge is 800 mm (31.5”).
2. If floor mounting from back is not possible, attach the cabinet at the top to wall with L-brackets (not included in the delivery) using the lifting lug attaching holes.

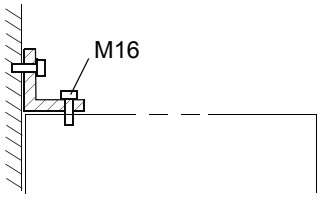

Alternative 2 – Using the holes inside the cabinet

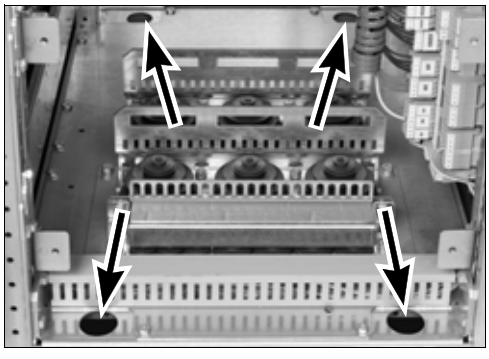

1. Attach the cabinet to the floor through the bottom attaching holes with M10 to M12 (3/8” to 1/2”) bolts. The recommended maximum distance between the front edge attaching points is 800 mm (31.5”).
2. If the back attaching holes are not accessible, attach the cabinet at the top to wall with L-brackets (not included in the delivery) using the lifting lug attaching holes.

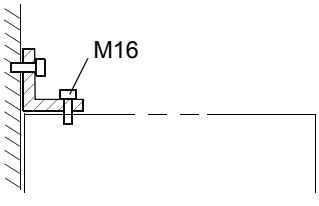

Miscellaneous

Cable duct in the floor below the cabinet

A cable duct can be constructed below the 500 mm wide middle part of the cabinet. The cabinet weight lies on the two 50 mm wide transverse sections which the floor must carry.

Prevent the cooling air flow from the cable duct to the cabinet by bottom plates. To ensure the degree of protection for the cabinet, use the original bottom plates delivered with the drive. With user-defined cable entries, take care of the degree of protection, fire protection and EMC compliance.

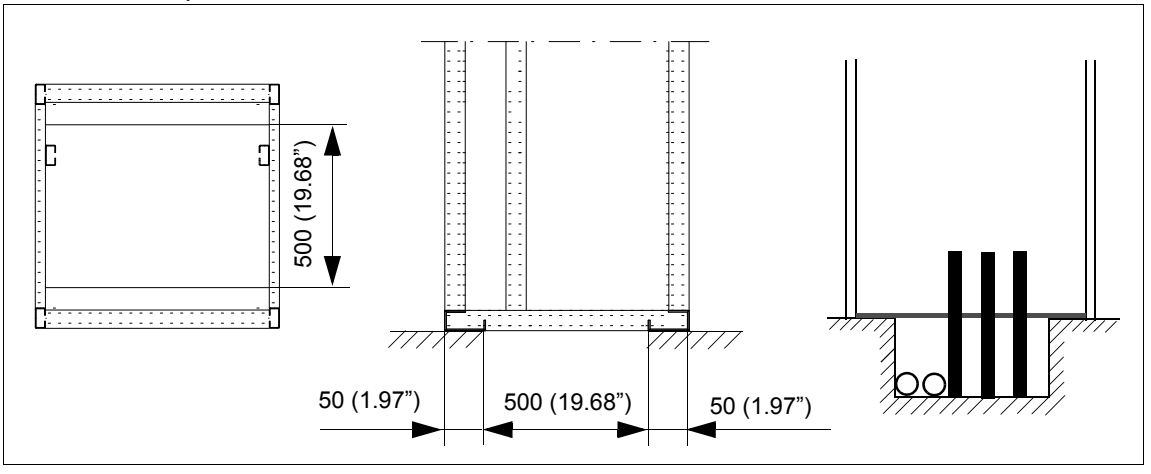

Arc welding

ABB does not recommend attaching of the cabinet by arc welding. However, if arc welding is the only mounting option, proceed as follows: Connect the return conductor of the welding equipment to the cabinet frame at the bottom within 0.5 meters (1.5 ft) of the welding point.

Note: The thickness of the zinc coating of the cabinet frame is 100 to 200 micrometers.

WARNING! Make sure that the return wire is connected correctly. Welding current must not return via any component or cabling of the drive. If the welding return wire is connected improperly, the welding circuit can damage electronic circuits in the cabinet.

WARNING! Do not inhale the welding fumes.

5

Guidelines for planning the electrical installation

Contents of this chapter

This chapter contains instructions for planning the electrical installation of the drive. Some instructions are mandatory to follow in every installation, others provide useful information that only concerns certain applications.

Limitation of liability

The installation must always be designed and made according to applicable local laws and regulations. ABB does not assume any liability whatsoever for any installation which breaches the local laws and/or other regulations. Furthermore, if the recommendations given by ABB are not followed, the drive may experience problems that the warranty does not cover.

Selecting the supply disconnecting device

The drive is equipped with a main switch-disconnector as standard. The disconnector can be locked to the open position for installation and maintenance work.

Selecting the main contactor

The drive can be equipped with a line contactor (option +F250).

Protecting the motor insulation and bearings

The drive employs modern IGBT inverter technology. Regardless of frequency, the drive output comprises pulses of approximately the drive DC bus voltage with a very short rise time. The pulse voltage can almost double at the motor terminals, depending on the attenuation and reflection properties of the motor cable and the terminals. This can cause additional stress on the motor and motor cable insulation.

Modern variable speed drives with their fast rising voltage pulses and high switching frequencies can generate current pulses that flow through the motor bearings. This can gradually erode the bearing races and rolling elements.

Optional du/dt filters protect motor insulation system and reduce bearing currents. Optional common mode filters mainly reduce bearing currents. Insulated N-end (non-drive end) bearings protect the motor bearings.

Examining the compatibility of the motor and drive

Use an asynchronous AC induction motor, permanent magnet synchronous motor, AC induction servomotor or ABB synchronous reluctance motor (SynRM motor) with the drive. Several induction motors can be connected to the drive at a time.

Select the motor size and drive type from to the rating tables in chapter *Technical data* on basis of the AC line voltage and motor load. Use the DriveSize PC tool if you need to tune the selection more in detail.

Make sure that the motor withstands the maximum peak voltage in the motor terminals. This voltage can typically be twice the DC link voltage (U_{DC}) of the drive:

U_{DC}	1.35 · 1.25 · 415 V DC (when supply voltage is 380 to 415 V AC) 1.35 · 1.25 · 500 V DC (when supply voltage is 440 to 500 V AC) or

Note: The voltage peaks at the motor terminals are relative to the supply voltage of the drive, not the drive output voltage.

Note: Consult the motor manufacturer before using a motor whose nominal voltage differs from the AC line voltage connected to the drive input.

Requirements table

The following table shows how to select the motor insulation system and when ABB requires optional drive du/dt and common mode filters and insulated N-end (non-drive end) motor bearings. If the installation does not fulfill these requirements or improper installation can shorten motor life or damage the motor bearings and voids the warranty.

Motor type	**Nominal AC supply voltage**	**Requirement for**		
		Motor insulation system	**ABB d*u*/d*t* and common mode filters, insulated N-end motor bearings**	
			100 kW ≤ P_N < 350 kW or IEC 315 ≤ frame size < IEC 400	**P_N ≥ 350 kW or frame size ≥ IEC 400**
ABB motors				
Random-wound M2_, M3_ and M4_	U_N ≤ 500 V	Standard	+ N	+ N + CMF
Form-wound HX_ and AM_	380 V < U_N ≤ 690 V	Standard	+ N + CMF	P_N < 500 kW: +N + CMF
				P_N ≥ 500 kW +N + d*u*/d*t* + CMF
Old* form-wound HX_ and modular	380 V < U_N ≤ 690 V	Check with the motor manufacturer.	+ N + d*u*/d*t* with voltages over 500 V + CMF	
Random-wound HX_ and AM_ **	0 V < U_N ≤ 500 V	Enamelled wire with fiber glass taping	+ N + CMF	
HDP	Consult the motor manufacturer.			

* manufactured before 1.1.1998

** For motors manufactured before 1.1.1998, check for additional instructions with the motor manufacturer.

Non-ABB motors				
Random-wound and form-wound	U_N ≤ 420 V	Standard: $\hat{U}_{LL}$ = 1300 V	+ N or CMF	+ N + CMF
	420 V < U_N ≤ 500 V	Standard: $\hat{U}_{LL}$ = 1300 V	+ d*u*/d*t* + (N or CMF)	+ N + d*u*/d*t* + CMF
		or		
		Reinforced: $\hat{U}_{LL}$ = 1600 V, 0.2 microsecond rise time	+ N or CMF	+ N + CMF

The abbreviations used in the table are defined below.

Abbr.	**Definition**
U_N	Nominal AC line voltage
$\hat{U}_{LL}$	Peak line-to-line voltage at motor terminals which the motor insulation must withstand
P_N	Motor nominal power
du/dt	du/dt filter at the output of the drive (option +E205)

CMF	Common mode filter (option +E208)
N	N-end bearing: insulated motor non-drive end bearing

Additional requirements for ABB motors of types other than M2_, M3_, M4_, HX_ and AM_

Use the selection criteria given for non-ABB motors.

Additional requirements for ABB high-output and IP23 motors

The rated output power of high output motors is higher than what is stated for the particular frame size in EN 50347 (2001). This table shows the requirements for ABB random-wound motor series (for example, M3AA, M3AP and M3BP).

Nominal AC supply voltage	**Requirement for**		
	Motor insulation system	**ABB du/dt and common mode filters, insulated N-end motor bearings**	
		100 kW ≤ P_N < 200 kW	**P_N ≥ 200 kW**
U_N ≤ 500 V	Standard	+ N	+ N + CMF

Additional requirements for non-ABB high-output and IP23 motors

The rated output power of high output motors is higher than what is stated for the particular frame size in EN 50347 (2001). The table below shows the requirements for random-wound and form-wound non-ABB motors with nominal power smaller than 350 kW. For bigger motors, consult the motor manufacturer.

Nominal AC supply voltage	**Requirement for**	
	Motor insulation system	**ABB d*u*/d*t* filter, insulated N-end bearing and ABB common mode filter**
		100 kW ≤ P_N < 350 kW or IEC 315 ≤ frame size < IEC 400
U_N ≤ 420 V	Standard: $\hat{U}_{LL}$ = 1300 V	+ N + CMF
420 V < U_N ≤ 500 V	Standard: $\hat{U}_{LL}$ = 1300 V	+ N + d*u*/d*t* + CMF
	or	
	Reinforced: $\hat{U}_{LL}$ = 1600 V, 0.2 microsecond rise time	+ N + CMF

Additional data for calculating the rise time and the peak line-to-line voltage

If you need to calculate the actual peak voltage and voltage rise time considering the actual cable length, proceed as follows:

- Peak line-to line voltage: Read the relative $\hat{U}_{LL}/U_N$ value from the appropriate diagram below and multiply it by the nominal supply voltage (U_N).
- Voltage rise time: Read the relative values $\hat{U}_{LL}/U_N$ and (du/dt)/U_N from the appropriate diagram below. Multiply the values by the nominal supply voltage (U_N) and substitute into equation $t = 0.8 \cdot \hat{U}_{LL}/(du/dt)$.

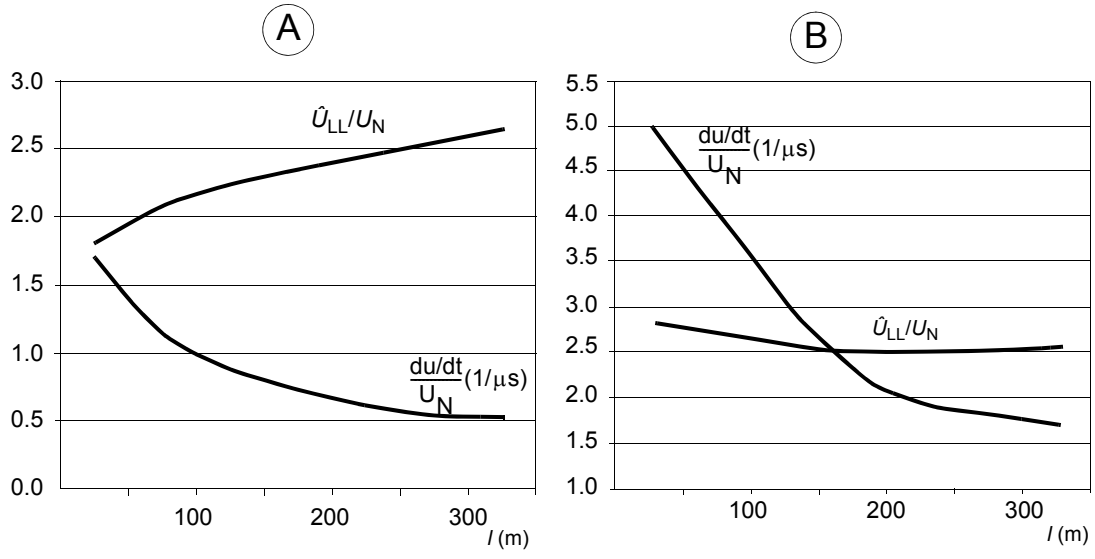

A	Drive with du/dt filter
B	Drive without du/dt filter
l	Motor cable length
$\hat{U}_{LL}/U_N$	Relative peak line-to-line voltage
(du/dt)/U_N	Relative du/dt value

Note: $\hat{U}_{LL}$ and du/dt values are approximately 20% higher with resistor braking.

Additional note for common mode filters

The drive is equipped with a common mode filter as standard.

Selecting the power cables

General rules

Select the input power and motor cables according to local regulations:

- Select a cable capable of carrying the drive nominal current. See section *Ratings* (page *117*) for the rated currents.
- Select a cable rated for at least 70 °C maximum permissible temperature of conductor in continuous use.
- Make sure that the inductance and impedance of the PE conductor/cable (grounding wire) is rated according to permissible touch voltage appearing under fault conditions (so that the fault point voltage will not rise excessively when a ground fault occurs).
- 600 V AC cable is accepted for up to 500 V AC.

Use symmetrical shielded motor cable (see page 54). Ground motor cable shields 360° at both ends. Keep the motor cable and its PE pigtail (twisted shield) as short as possible to reduce high-frequency electromagnetic emissions.

Note: When continuous metal conduit is employed, shielded cable is not required. The conduit must have bonding at both ends.

A four-conductor system is allowed for input cabling, but ABB recommend shielded symmetrical cable.

Compared to a four-conductor system, the use of symmetrical shielded cable reduces electromagnetic emission of the whole drive system as well as the stress on motor insulation, bearing currents and wear.

The protective conductor must always have an adequate conductivity. The table below shows the minimum cross-sectional area related to the phase conductor size according to IEC 61439-1 when the phase conductor and the protective conductor are made of the same metal.

Cross-sectional area of the phase conductors S (mm^2)	Minimum cross-sectional area of the corresponding protective conductor S_p (mm^2)
$S \leq 16$	S
$16 < S \leq 35$	16
$35 < S \leq 400$	S/2
$400 < S \leq 800$	200

Typical power cable sizes

The table below gives copper and aluminum cable types with concentric copper shield for the drives with nominal current. For the cable sizes accepted by the drive cabinet lead-throughs and connection terminals, see page 121.

Drive type	Frame size	IEC [1]	
		Cu cable type	Al cable type
		mm^2	mm^2
U_N = 400 V			
ACS580-07-0495A-4	R10	3 × (3×95)	3 × (3×150)
ACS580-07-0575A-4	R10	3 × (3×120)	3 × (3×185)
ACS580-07-0640A-4	R10	3 × (3×150)	3 × (3×240)
ACS580-07-0715A-4	R11	3 × (3×185)	4 × (3×185)
ACS580-07-0810A-4	R11	3 × (3×240)	4 × (3×240)
ACS580-07-0870A-4	R11	3 × (3×240)	4 × (3×240)

1. The cable sizing is based on max. 9 cables laid on a cable ladder side by side, three ladder type trays one on top of the other, ambient temperature 30 °C, PVC insulation, surface temperature 70 °C (EN 60204-1 and IEC 60364-5-52/2001). For other conditions, size the cables according to local safety regulations, appropriate input voltage and the load current of the drive.

Alternative power cable types

The recommended and not allowed power cable types to be used with the drive are presented below.

Recommended power cable types

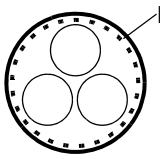	Symmetrical shielded cable with three phase conductors and a concentric PE conductor as shield. The shield must meet the requirements of IEC 61439-1, see section *Motor cable shield* on page *53*. Check with local / state / country electrical codes for allowance.
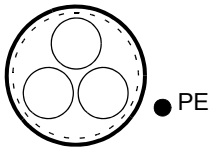	Symmetrical shielded cable with three phase conductors and a concentric PE conductor as shield. A separate PE conductor is required if the shield does not meet the requirements of IEC 61439-1, see section *Motor cable shield* on page *53*.
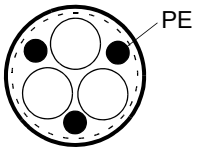	Symmetrical shielded cable with three phase conductors and symmetrically constructed PE conductor, and a shield. The PE conductor must meet the requirements of IEC 61439-1, see section *Motor cable shield* on page *53*.

Power cable types for limited use

	A four-conductor system (three phase conductors and a protective conductor on a cable tray) is **not allowed for motor cabling** (allowed for input cabling).

Not allowed power cable types

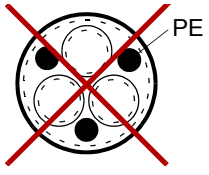	Symmetrical shielded cable with individual shields for each phase conductor is not allowed on any cable size for input and motor cabling.

Motor cable shield

If the motor cable shield is used as the sole protective earth conductor of the motor, make sure that the conductivity of the shield is sufficient. See section *General rules* on page *53*, or IEC 61439-1. To effectively suppress radiated and conducted radio-frequency emissions, the cable shield conductivity must be at least 1/10 of the phase conductor conductivity. The requirements are easily met with a copper or aluminum shield. The minimum requirement of the motor cable shield of the drive is shown below. It consists of a concentric layer of copper wires with an open helix of copper tape or copper wire. The better and tighter the shield, the lower the emission level and bearing currents.

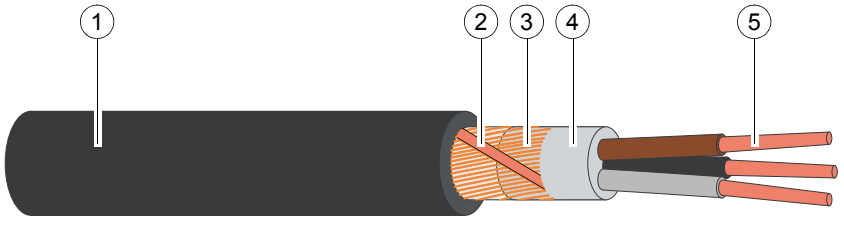

1	Insulation jacket
2	Helix of copper tape or copper wire

3	Copper wire screen
4	Inner insulation
5	Cable core

Selecting the control cables

Shielding

All control cables must be shielded.

Use a double-shielded twisted pair cable for analog signals. ABB recommends this type of cable for the pulse encoder signals also. Employ one individually shielded pair for each signal. Do not use common return for different analog signals.

A double-shielded cable (figure a below) is the best alternative for low-voltage digital signals but single-shielded (b) twisted pair cable is also acceptable.

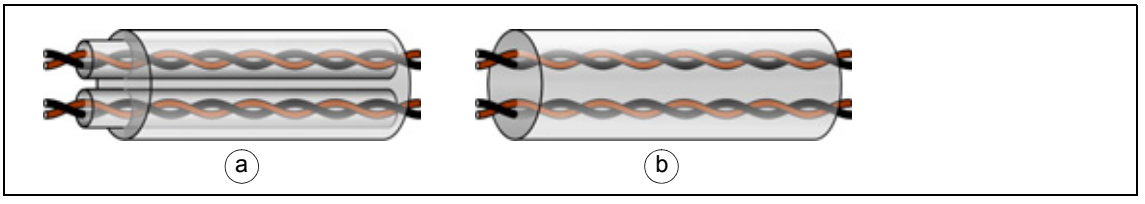

Signals in separate cables

Run analog and digital signals in separate, shielded cables. Never mix 24 V DC and 115/230 V AC signals in the same cable.

Signals allowed to be run in the same cable

Relay-controlled signals, the voltage of which does not exceed 48 V, can be run in the same cables as digital input signals. The relay-controlled signals should be run as twisted pairs.

Relay cable type

The cable type with braided metallic screen (for example ÖLFLEX by LAPPKABEL, Germany) has been tested and approved by ABB.

Control panel cable length and type

In remote use, the cable that connects the control panel to the drive must not be longer than three meters (10 ft). Cable type: shielded CAT 5e or better Ethernet patch cable with RJ-45 ends.

Routing the cables

Route the motor cable away from other cable routes. Motor cables of several drives can be run in parallel installed next to each other. Install the motor cables, input power cables and control cables on separate trays. Avoid long parallel runs of motor cables with other cables in order to decrease electromagnetic interference caused by the rapid changes in the drive output voltage.

Where control cables must cross power cables, arrange them at an angle as near to 90 degrees as possible. Do not run extra cables through the drive.

The cable trays must have good electrical bonding to each other and to the grounding electrodes. Aluminum tray systems can be used to improve local equalizing of potential.

A diagram of the cable routing is shown below.

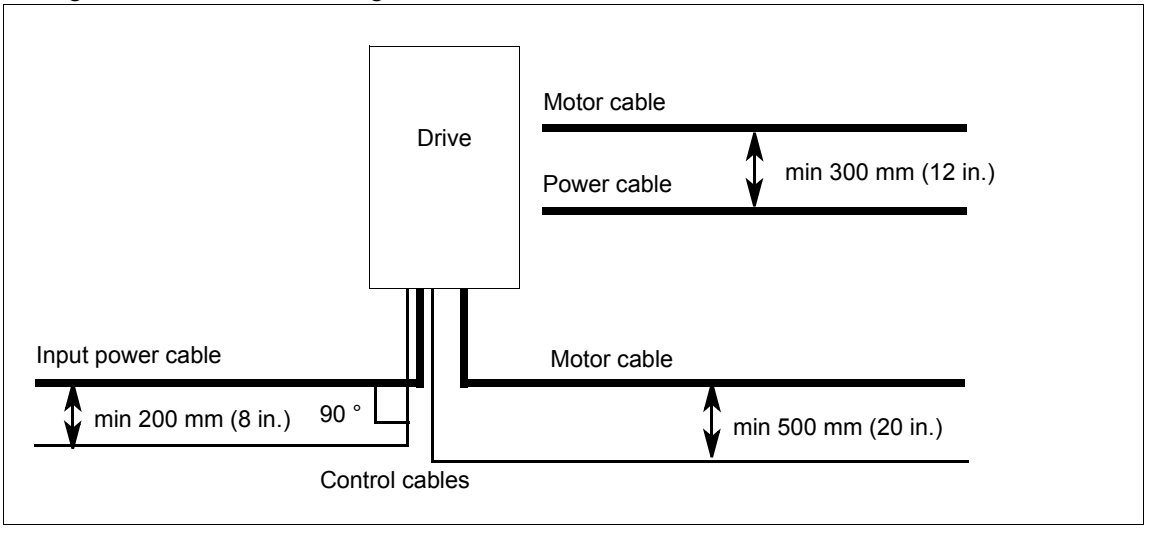

Separate control cable ducts

Lead 24 V and 230 V (120 V) control cables in separate ducts unless the 24 V cable is insulated for 230 V (120 V) or insulated with an insulation sleeving for 230 V (120 V).

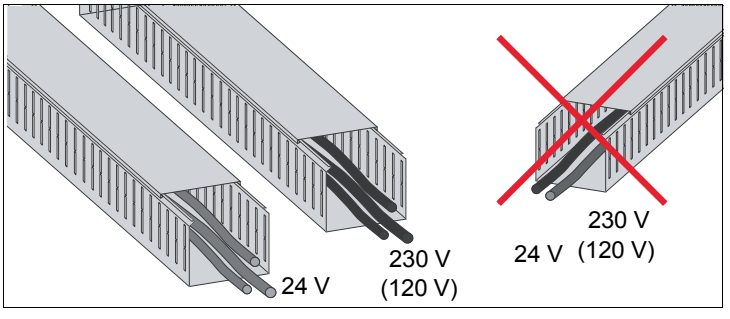

Continuous motor cable shield or enclosure for equipment on the motor cable

To minimize the emission level when safety switches, contactors, connection boxes or similar equipment are installed on the motor cable between the drive and the motor:

- European Union: Install the equipment in a metal enclosure with 360 degree grounding for the shields of both the incoming and outgoing cable, or connect the shields of the cables otherwise together.

Implementing thermal overload and short-circuit protection

Protecting the drive and input power cable in short-circuits

The drive is equipped with internal AC fuses (1) as standard. The fuses restrict drive damage and prevent damage to adjoining equipment in case of a short-circuit inside the drive.

Protect the input cable with fuses or circuit breaker (2) according to local safety regulations, appropriate input voltage and the rated current of the drive (see chapter *Technical data*).

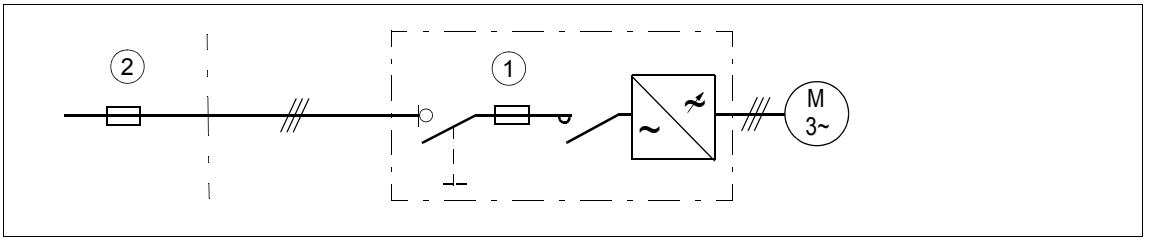

Protecting the motor and motor cable in short-circuits

The drive protects the motor cable and motor in a short-circuit situation when the motor cable is sized according to the nominal current of the drive. No additional protection devices are needed.

Protecting the drive and the input power and motor cables against thermal overload

The drive protects itself and the input and motor cables against thermal overload when the cables are sized according to the nominal current of the drive. No additional thermal protection devices are needed.

WARNING! If the drive is connected to multiple motors, use a separate circuit breaker or fuses for protecting each motor cable and motor against overload. The drive overload protection is tuned for the total motor load. It may not trip due to an overload in one motor circuit only.

Protecting the motor against thermal overload

According to regulations, the motor must be protected against thermal overload and the current must be switched off when overload is detected. The drive includes a motor thermal protection function that protects the motor and switches off the current when necessary. Depending on a drive parameter value, the function either monitors a calculated temperature value (based on a motor thermal model) or an actual temperature indication given by motor temperature sensors. The user can tune the thermal model further by feeding in additional motor and load data.

The most common temperature sensors are:

- motor sizes IEC180…225: thermal switch, eg, Klixon
- motor sizes IEC200…250 and larger: PTC or Pt100.

For more information, see the firmware manual.

Protecting the drive against ground faults

The drive is equipped with an internal ground fault protective function to protect the drive against ground faults in the motor and motor cable in TN (grounded) networks. This is not a personnel safety or a fire protection feature. The ground fault protective function can be disabled with a parameter, refer to the firmware manual.

Residual current device compatibility

The drive is suitable to be used with residual current devices of Type B.

Note: The EMC filter of the drive includes capacitors connected between the main circuit and the frame. These capacitors and long motor cables increase the ground leakage current and can cause fault current circuit breakers to function.

Implementing the emergency stop function

The drive can be equipped with emergency stop function of stop category 0. For safety reasons, install the emergency stop devices at each operator control station and at other operating stations where emergency stop can be needed.

Note: Pressing the stop key ⊗ on the control panel of the drive, or turning the operating switch of the drive from position “1” to “0” does not generate an emergency stop of the motor or separate the drive from dangerous potential.

See the user’s manual for the wiring, start-up and operation instructions.

Option code	User’s manual	Manual code (English)
+Q951	Emergency stop, stop category 0 (option +Q951) for ACS580-07 drives user's manual	*3AXD50000032016*

Implementing ATEX-certified thermistor protection

See *CPTC-02 ATEX-certified thermistor protection module, Ex II (2) GD (+L537+Q971) user's manual* (3AXD50000030058 [English]).

Implementing the Safe torque off function

See chapter *Safe torque off function* on page *137*.

Implementing the Power-loss ride-through function

Implement the power-loss ride-through function as follows:

- Check that the power-loss ride-through function of the drive is enabled with parameter **30.31 Undervoltage control**.
- Set parameter **21.01 Vector start mode** to **Automatic** (in vector mode) or parameter **21.19 Scalar start mode** to **Automatic** (in scalar mode) to make flying start (starting into a rotating motor) possible. If the installation is equipped with a main contactor, prevent its tripping at the input power break. For example, use a time delay relay (hold) in the contactor control circuit.

WARNING! Make sure that the flying restart of the motor will not cause any danger. If you are in doubt, do not implement the Power-loss ride-through function.

Units with line contactor (option +F250)

The main contactor of the drive opens in a power-loss situation. When the power returns, the contactor closes. However, if the power-loss situation lasts so long that the drive trips on undervoltage, it must be reset and started again to continue operation. If the power-loss situation lasts so long that the buffering module (C22) empties, the main contactor remains open and the drive operates only after reset and a new start.

Supplying power for the auxiliary circuits

The drive is equipped with an auxiliary control voltage transformer which supplies control voltage, for example, for the control devices and cabinet fan(s).

The following options are to be supplied from external power sources:

- +G300 Cabinet heaters and/or lighting (230 or 115 V AC; external fuse: 16 A gG).

Using power factor compensation capacitors with the drive

Power factor compensation is not needed with AC drives.

WARNING! Do not connect power factor compensation capacitors or harmonic filters to the motor cables (between the drive and the motor). They are not meant to be used with AC drives and can cause permanent damage to the drive or themselves.

Implementing a safety switch between the drive and the motor

ABB recommends to install a safety switch between the permanent magnet synchronous motor and the drive output. The switch is needed to isolate the motor during any maintenance work on the drive.

Using a contactor between the drive and the motor

Implementing the control of the output contactor depends on how you select the drive to operate. See also section *Implementing a bypass connection* on page *61*.

When you have selected to use

- vector control mode and motor ramp stop,

open the contactor as follows:

1. Give a stop command to the drive.
2. Wait until the drive decelerates the motor to zero speed.
3. Open the contactor.

When you have selected to use

- vector control mode and motor coast stop; or scalar control mode,

open the contactor as follows:

1. Give a stop command to the drive.
2. Open the contactor.

WARNING! When the vector control mode is in use, never open the output contactor while the drive controls the motor. The vector control operates extremely fast, much faster than it takes for the contactor to open its contacts. When the contactor starts opening while the drive controls the motor, the vector control will try to maintain the load current by immediately increasing the drive output voltage to the maximum. This will damage, or even burn the contactor completely.

Implementing a bypass connection

If bypassing is required, employ mechanically or electrically interlocked contactors between the motor and the drive and between the motor and the power line. Make sure with interlocking that the contactors cannot be closed simultaneously.

WARNING! Never connect the drive output to the electrical power network. The connection can damage the drive.

Example bypass connection

An example bypass connection is shown below.

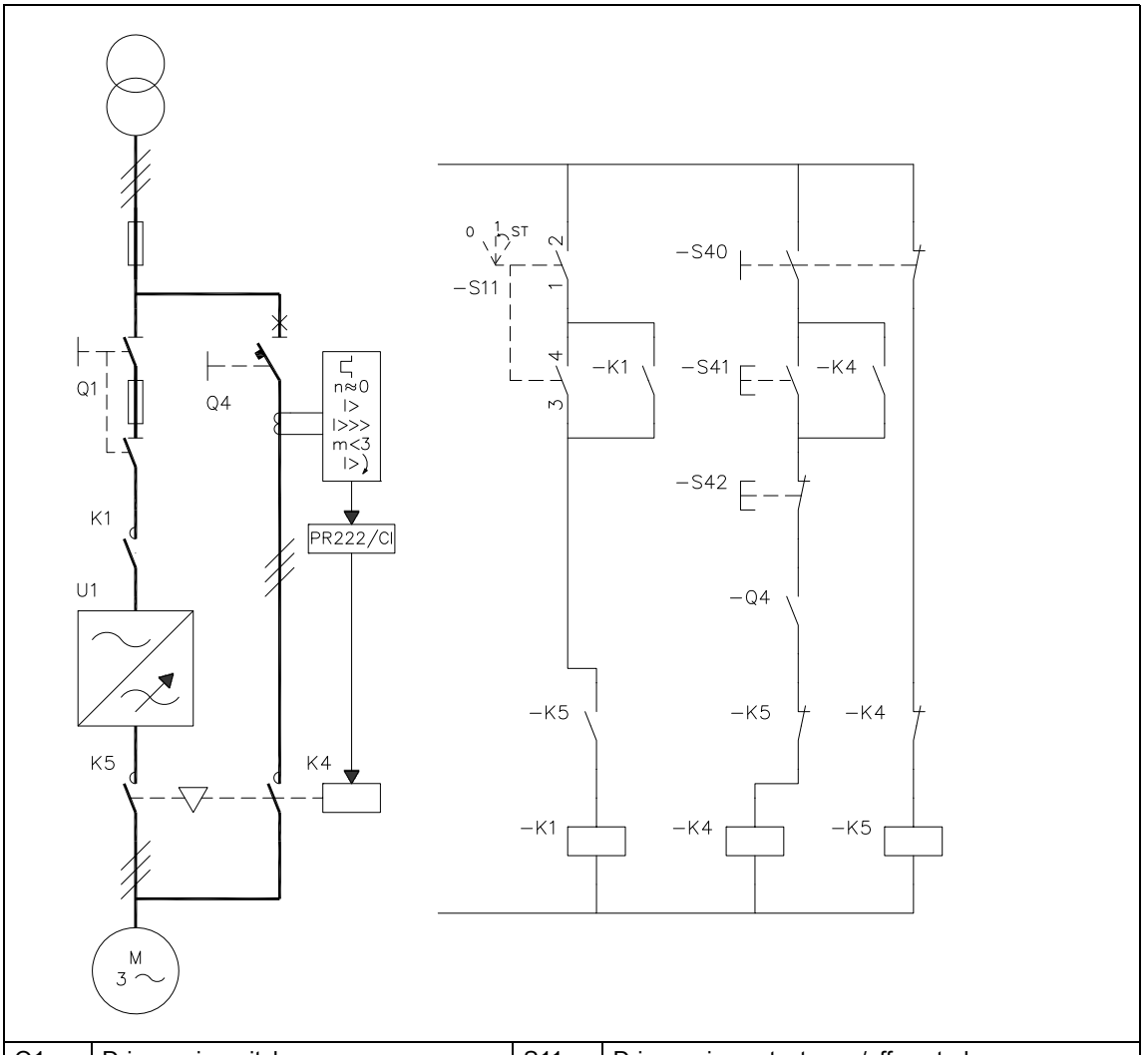

Q1	Drive main switch	S11	Drive main contactor on/off control
Q4	Bypass circuit breaker	S40	Motor power supply selection (drive or direct-on-line)
K1	Drive main contactor	S41	Start when motor is connected direct-on-line
K4	Bypass contactor	S42	Stop when motor is connected direct-on-line
K5	Drive output contactor	-	-

Switching the motor power supply from drive to direct-on-line

1. Stop the drive and the motor with the drive control panel (drive in local control mode) or with the external stop signal (drive in remote control mode).
2. Open the main contactor of the drive with S11.
3. Switch the motor power supply from the drive to direct-on-line with S40.
4. Wait for 10 seconds to allow the motor magnetization to die away.
5. Start the motor with S41.

Switching the motor power supply from direct-on-line to drive

1. Stop the motor with S42.
2. Switch the motor power supply from direct-on-line to the drive with S40.
3. Close the main contactor of the drive with switch S11 (-> turn to position ST for two seconds and leave at position 1).
4. Start the drive and the motor with the drive control panel (drive in local control mode) or with the external start signal (drive in remote control mode).

Protecting the contacts of relay outputs

Inductive loads (relays, contactors, motors) cause voltage transients when switched off.

ABB highly recommends to equip inductive loads with noise attenuating circuits (varistors, RC filters [AC] or diodes [DC]) in order to minimize the EMC emission at switch-off. If not suppressed, the disturbances can connect capacitively or inductively to other conductors in the control cable and form a risk of malfunction in other parts of the system.

Install the protective component as close to the inductive load as possible. Do not install protective components at the relay outputs.

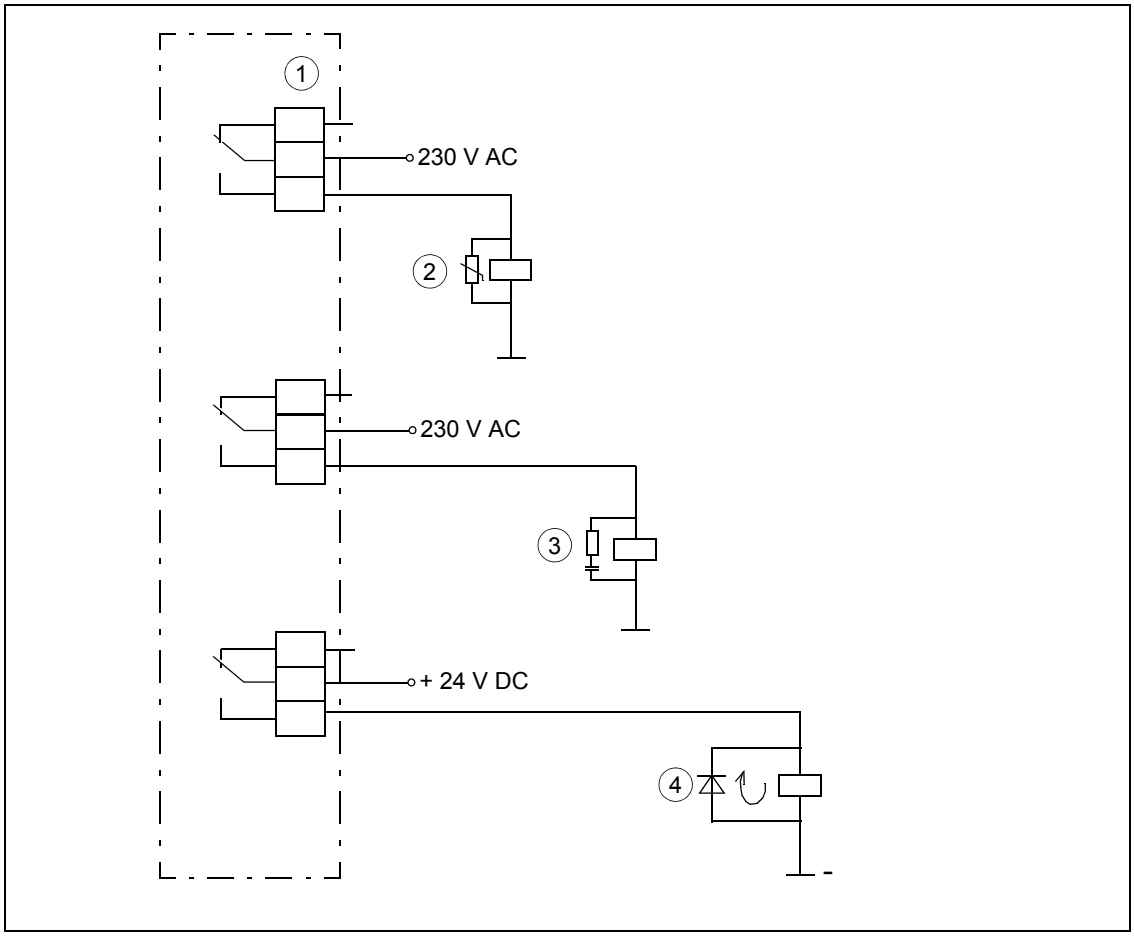

1) Relay outputs; 2) Varistor; 3) RC filter; 4) diode

Connecting a motor temperature sensor to the drive I/O

WARNING! IEC 60664 requires double or reinforced insulation between live parts and the surface of accessible parts of electrical equipment which are either non-conductive or conductive but not connected to the protective earth.

To fulfil this requirement, you can connect a thermistor (and other similar components) to the inputs of the drive:

- if there is double or reinforced insulation between the thermistor and live parts of the motor or
- if circuits connected to all digital and analog inputs of the drive are protected against contact and insulated with basic insulation (the same voltage level as the drive main circuit) from other low voltage circuits.

Another way is to use an optional thermistor protection module or an external thermistor relay. The insulation of the relay must be rated for the same voltage level as the main circuit of the drive. For connection to the relay, see the firmware manual. For connection to the thermistor protection module, see its manual.

See sections

- *AI1 and AI2 as Pt100, Pt1000, Ni1000, KTY83 and KTY84 sensor inputs (ANALOG IN/OUT)* on page *86*
- *CMOD-02 multifunction extension module (external 24 V AC/DC and isolated PTC interface)* on page *162*
- *CPTC-02 ATEX-certified thermistor protection module, (external 24 V AC/DC and isolated PTC interface)* on page *168*.

6

Electrical installation

Contents of this chapter

This chapter gives instructions on the wiring the drive.

Warnings

WARNING! If you are not a qualified electrician do not do the installation work described in this chapter. Obey the instructions in chapter *Safety instructions*. If you ignore them, injury or death, or damage to the equipment can occur.

Checking the insulation of the assembly

Drive

Do not make any voltage tolerance or insulation resistance tests on any part of the drive as testing can damage the drive. Every drive has been tested for insulation between the main circuit and the chassis at the factory. Also, there are voltage-limiting circuits inside the drive which cut down the testing voltage automatically.

Input cable

Check the insulation of the input cable according to local regulations before connecting it to the drive.

Motor and motor cable

1. Check that the motor cable is disconnected from the drive output terminals U2, V2 and W2.
2. Measure the insulation resistance between each phase conductor and then between each phase conductor and the Protective Earth conductor using a measuring voltage of 1000 V DC. The insulation resistance of an ABB motor must exceed 100 Mohm (reference value at 25 °C or 77 °F). For the insulation resistance of other motors, consult the manufacturer's instructions. **Note**: Moisture inside the motor casing will reduce the insulation resistance. If moisture is suspected, dry the motor and repeat the measurement.

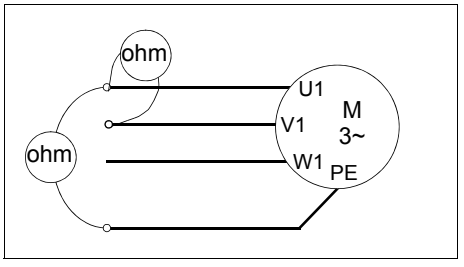

Attaching the device stickers on the cabinet door

A multilingual device label sticker is delivered with the drive. Attach the stickers in the local language on the English texts, see section *Door switches and lights* on page *31*.

Connecting the power cables

Connection diagram

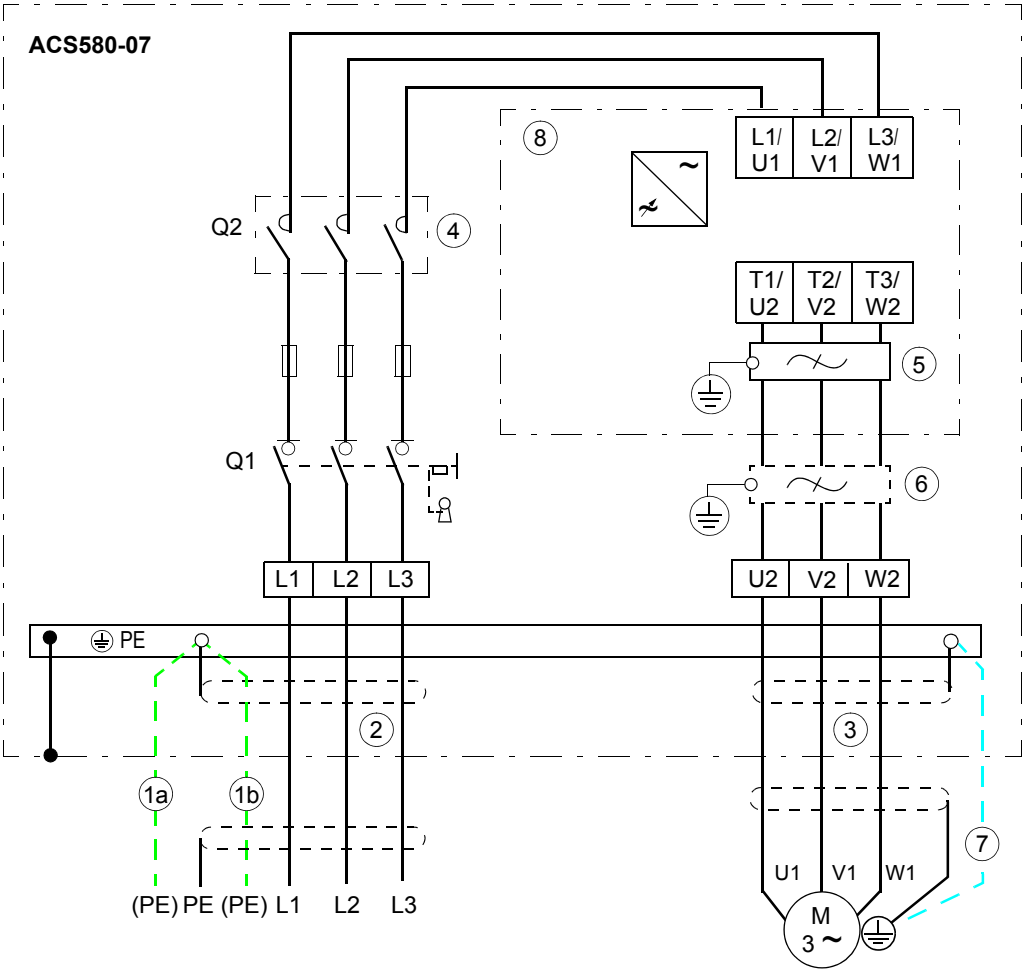

1	Use a separate grounding PE cable (1a) or a cable with a separate PE conductor (1b) if the conductivity of the shield does not meet the requirements for the PE conductor (see page *53*).
2	360-degree grounding is recommended if shielded cable is used. Ground the other end of the input cable shield or PE conductor at the distribution board.
3	360-degree grounding is required.
4	Line contactor (option +F250)
5	Common mode filter
6	du/dt filter (option +E205)
7	Use a separate grounding cable if the shield does not meet the requirements of IEC 61439-1 (see page *53*) and there is no symmetrically constructed grounding conductor in the cable (see page *54*).
8	Drive module

Note:

If there is a symmetrically constructed grounding conductor on the motor cable in addition to the conductive shield, connect the grounding conductor to the grounding terminal at the drive and motor ends.

Do not use an asymmetrically constructed motor cable. Connecting its fourth conductor at the motor end increases bearing currents and causes extra wear.

Layout of the input and motor cable connection terminals (frames R10 and R11)

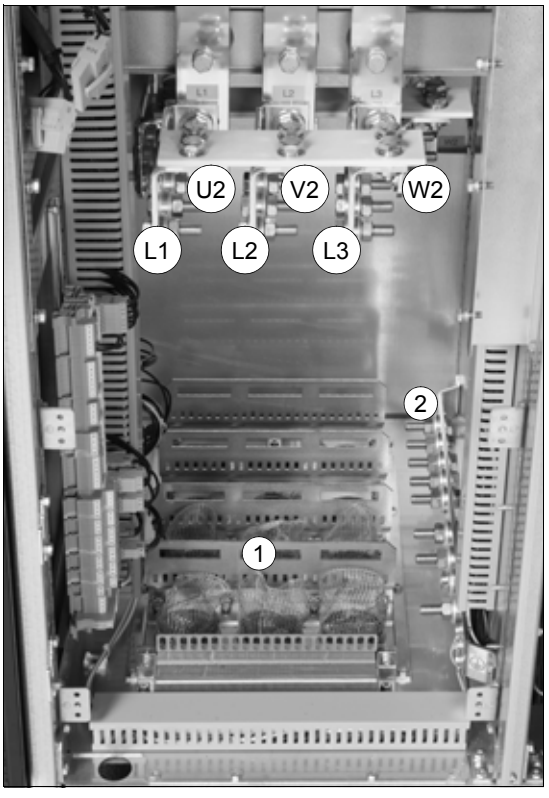

1	Strain relief
L1, L2, L3	Input power cable terminals
U2, V2, W2	Motor cable terminals
2	PE terminal

Connection procedure (IEC)

1. Do the steps in section *Precautions before electrical work* on page *16* before you start the work.
2. Open the cabinet door.
3. Open the swing-out frame.
4. To remove the mounting plate(s) above the cabinet “door” fan, undo the mounting screws. With option +G300: Unplug the connectors at the back of the mounting plate.
5. To remove the fan mounting plate, loosen the mounting screws and lift the plate up. Unplug the fan supply cables.
6. Remove the shrouds on the power cable terminals.
7. Peel off 3 to 5 cm of the outer insulation of the cables above the lead-through plate for the 360° high-frequency grounding.
8. Prepare the ends of the cables.

WARNING! Apply grease to stripped aluminum conductors before attaching them to non-coated aluminum cable lugs. Obey the grease manufacturer’s instructions. Aluminum-aluminum contact can cause oxidation in the contact surfaces.

9. If fire insulation is used, make an opening in the mineral wool sheet according to the diameter of the cable.

10. For IP42 drives: Slide the cables through the lead-throughs with the conductive sleeves.
11. For IP54 drives: Remove rubber grommets from the lead-through plate for the cables to be connected. Cut adequate holes into the rubber grommets. Slide the grommets onto the cables. Slide the cables through the lead-throughs with the conductive sleeves and attach the grommets to the holes.
12. Attach the conductive sleeves to the cable shields with cable ties.
13. Seal the slot between the cable and mineral wool sheet (if used) with sealing compound (eg, CSD-F, ABB brand name DXXT-11, code 35080082).
14. Tie up the unused conductive sleeves with cable ties.
15. Connect the twisted shields of the motor cables to the ground bar and the phase conductors to the U2, V2 and W2 terminals.
16. Connect the twisted shields of the input cables and separate ground cable (if present) to the PE terminal of the cabinet and the phase conductors to the L1, L2 and L3 terminals.
17. Tighten the power cable screws to the torque given in *Terminal and lead-through data for the power cables* on page *121*.
18. Reinstall the shroud(s) and mounting plates.

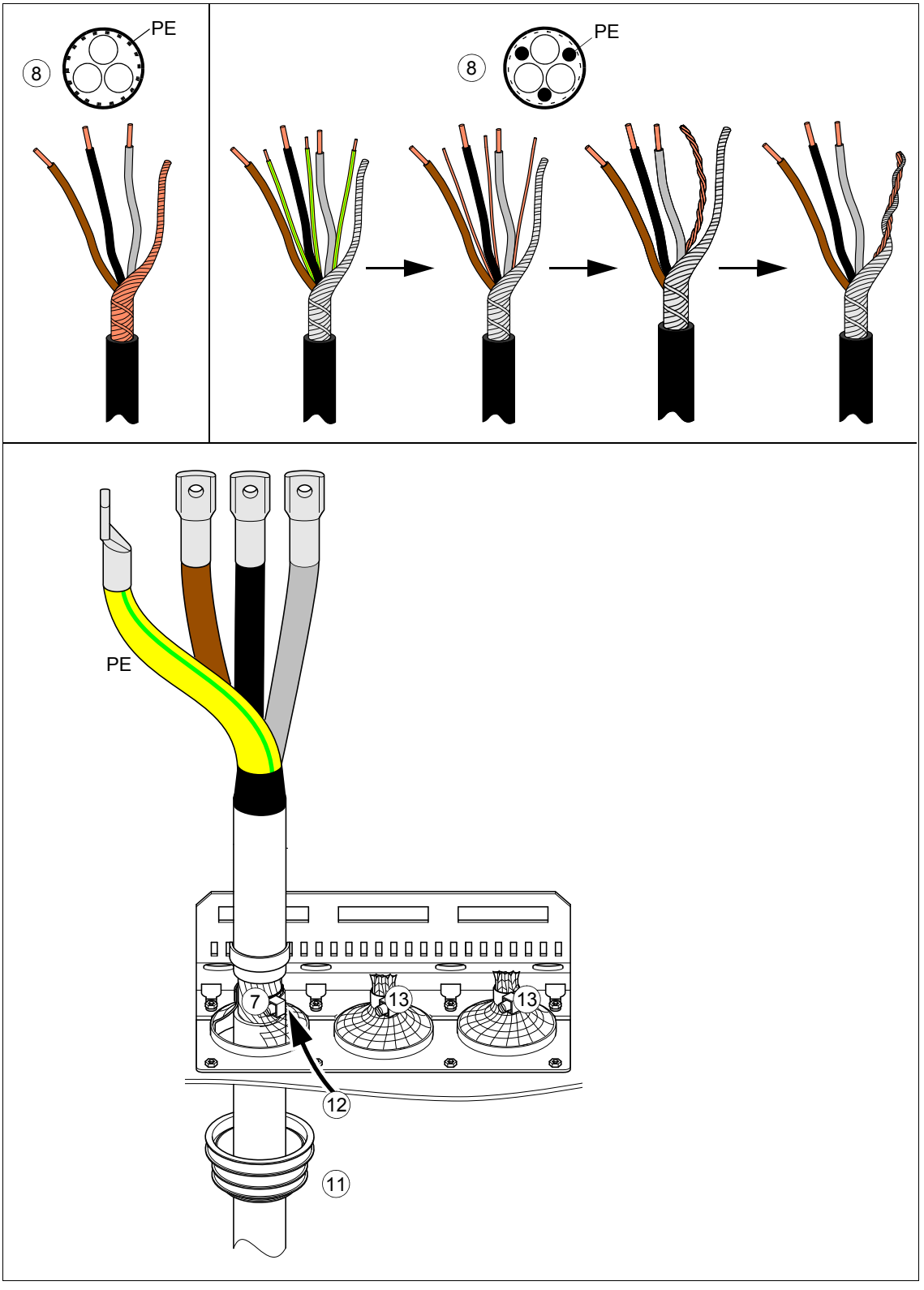
8
PE
8
PE
PE
7
13
13
12
11

Grounding the motor cable shield at the motor end

Always ground the motor cable shield at the motor end. For minimum radio frequency interference, ground the motor cable shield 360 degrees at the lead-through of the motor terminal box

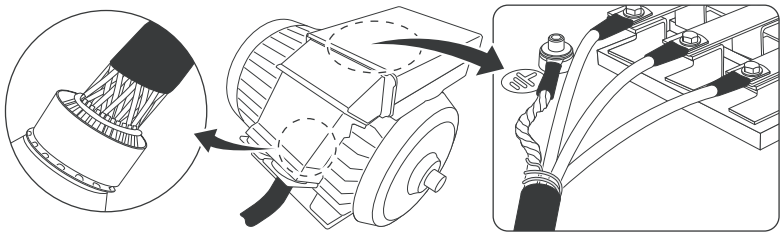

See also *Continuous motor cable shield or enclosure for equipment on the motor cable* on page *57*.

Connecting the control cables

See chapter *Control unit* on page *79* for the default I/O connections of ACS580 standard control program. The default I/O connections can be different with some hardware options, see the circuit diagrams delivered with the drive for the actual wiring.

Connect the cables as described under *Control cable connection procedure* on page *71*.

Control cable connection procedure

WARNING! Obey the instructions in chapter *Safety instructions*. If you ignore them, injury or death, or damage to the equipment can occur.

1. Stop the drive and do the steps in section *Precautions before electrical work* on page *16* before you start the work.
2. Run the control cables to the inside of the drive module cubicle as described in section *Grounding the outer shields of the control cables at the cabinet lead-through* below.
3. Route the control cables as described in section *Routing the control cables inside the cabinet (frames R10 and R11)* on page *74*.
4. Connect the control cables as described in sections *Connecting the control unit cables* on page *74* … *Setting the voltage range of the auxiliary control voltage transformer (T21)* on page *76*.

Grounding the outer shields of the control cables at the cabinet lead-through

Applicability

This section applies to drives without solid cable conduit plate (no options +H351, +H353, +H358).

Procedure

Ground the outer shields of all control cables 360 degrees at the EMI conductive cushions as follows:

1. Loosen the tightening screws of the EMI conductive cushions and pull the cushions apart.
2. Cut adequate holes to the rubber grommets in the lead-through plate and lead the cables through the grommets and the cushions into the cabinet.
3. Strip off the cable plastic sheath above the lead-through plate just enough to ensure proper connection of the bare shield and the EMI conductive cushions.
4. Tighten the two tightening screws so that the EMI conductive cushions press tightly round the bare shield.

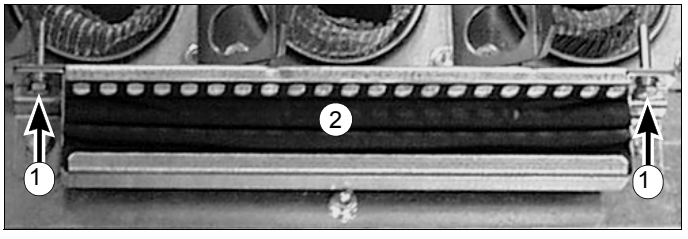

View from above

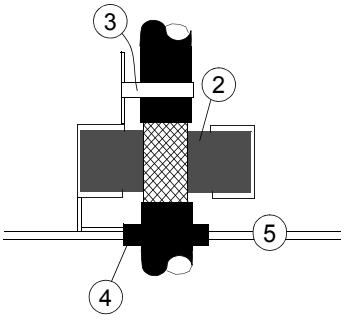

1 Tightening screw
2 EMI conductive cushion
3 Strain relief
4 Grommet
5 Lead-through plate

Note 1: Keep the shields continuous as close to the connection terminals as possible. Secure the cables mechanically at the lead-through strain relief.

Note 2: If the outer surface of the shield is non-conductive:

- Cut the shield at the midpoint of the bare part. Be careful not to cut the conductors or the grounding wire (if present).
- Turn the shield inside out to expose its conductive surface.
- Cover the turned shield and the stripped cable with copper foil to keep the shielding continuous.

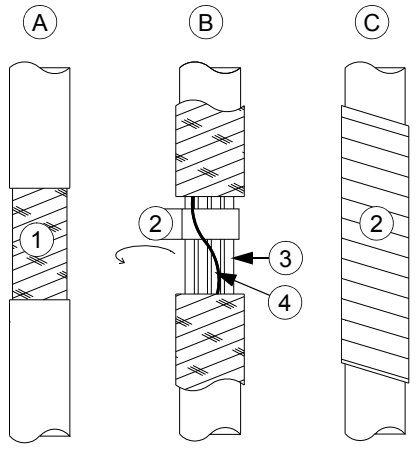

A Stripped cable
B Conductive surface of the shield exposed
C Stripped part covered with copper foil
1 Cable shield
2 Copper foil
3 Shielded twisted pair
4 Grounding wire

Note for top entry of cables: When each cable has its own rubber grommet, sufficient IP and EMC protection can be achieved. However, if very many control cables come to one cabinet, plan the installation beforehand as follows:

1. Make a list of the cables coming to the cabinet.
2. Sort the cables going to the left into one group and the cables going to the right into another group to avoid unnecessary crossing of cables inside the cabinet.
3. Sort the cables in each group according to size.
4. Group the cables for each grommet as follows ensuring that each cable has a proper contact to the cushions on both sides.

Cable diameter in mm	Max. number of cables per grommet
≤ 13	4
≤ 17	3
< 25	2
≥ 25	1

5. Divide the bunches so that cables will be arranged according to size from thickest to the thinnest between the EMI conductive cushions.
6. If more than one cable go through a grommet, seal the grommet by applying Loctite 5221 (catalogue number 25551) inside the grommet.

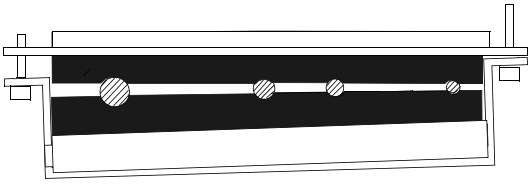

Routing the control cables inside the cabinet (frames R10 and R11)

Connecting the control unit cables

Note: Keep any signal wire pairs twisted as close to the terminals as possible. Twisting the wire with its return wire reduces disturbances caused by inductive coupling.

Note: Leave slack to the control wires to make it possible to lift the control unit mounting plate a little when the drive module is replaced.

Drives without additional I/O terminal block (option +L504): Ground the pair-cable shields and all grounding wires to the clamp next to the control unit as shown below.

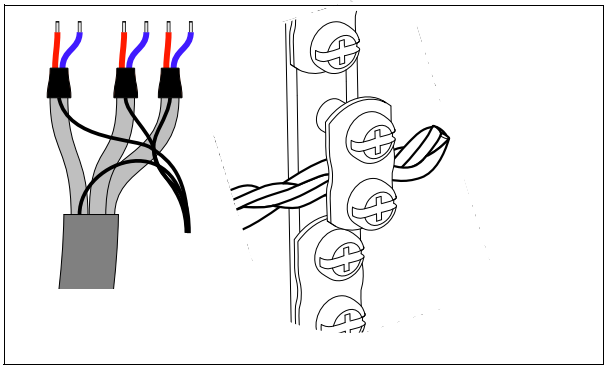

Drives with additional I/O terminal block (option +L504): Ground the pair-cable shields and all grounding wires to the grounding clamp next to the terminal block as shown below.

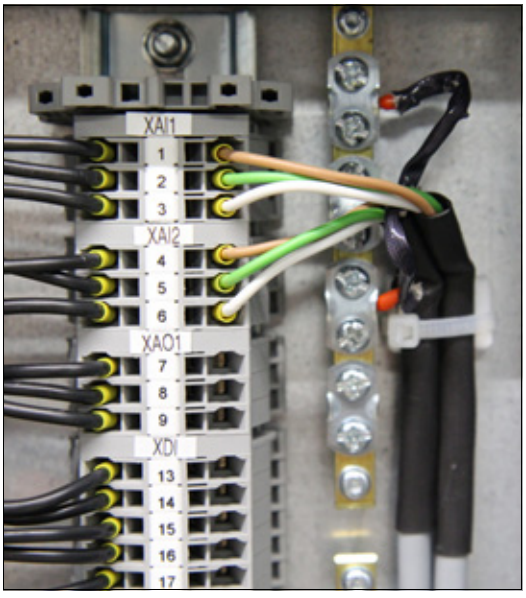

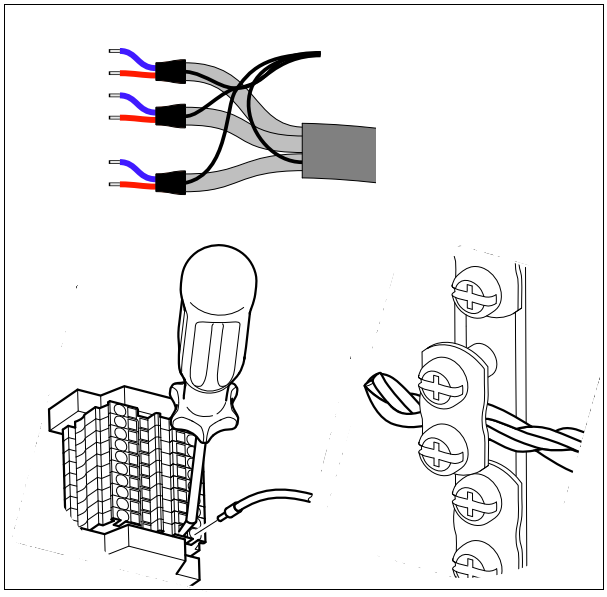

Leave the other ends of the control cable shields unconnected or ground them indirectly via a high-frequency capacitor with a few nanofarads, eg, 3.3 nF / 630 V. The shield can also be grounded directly at both ends if they are in the same ground line with no significant voltage drop between the end points.

Connect the conductors to the appropriate terminals (see page *81*) of the control unit or optional terminal block X504.

Connecting the emergency stop push buttons (options +Q951)

Connect the emergency stop push buttons to terminals according to the circuit diagrams delivered with the drive.

Connecting the external power supply cables for the cabinet heater and lighting and motor heater (options +G300)

See the circuit diagrams delivered with drive.

Connect the external power supply wires for the cabinet heater to terminal block X300 at the back of the mounting plate.

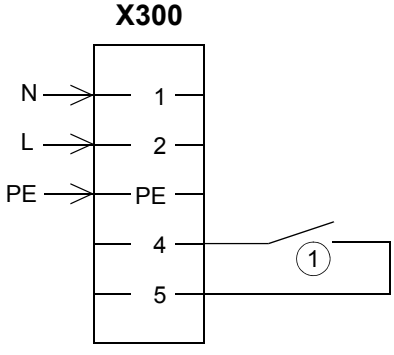

1 Internal wiring of the cabinet heater: heater off/fault = contact open.

Setting the voltage range of the auxiliary control voltage transformer (T21)

Connect the power supply wires of the auxiliary control voltage transformer according to the power network voltage.

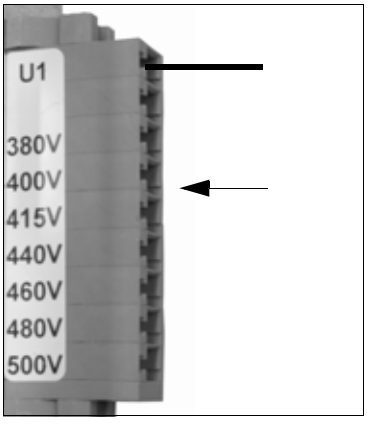

Connecting a PC

A PC (with eg. the Drive composer PC tool) can be connected to the drive as follows:

1. Connect an ACS-AP-S control panel to the drive either by using an Ethernet (eg. CAT5E) networking cable, or by inserting the panel into the panel holder.

WARNING! Do not connect the PC directly to the control panel connector of the control unit as this can cause damage.

2. Lift the USB connector cover on the control panel from bottom upwards.
3. Connect an USB cable (Type A to Type Mini-B) between the USB connector on the control panel (3a) and a free USB port on the PC (3b).
4. The panel displays an indication whenever the connection is active

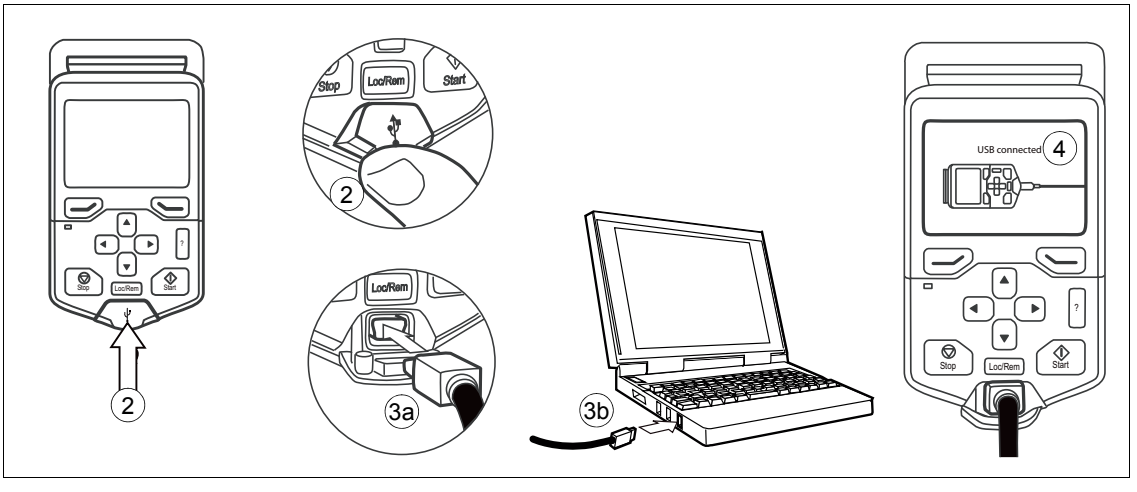

Note 1: When a PC is connected to the control panel, the control panel keypad is disabled. In this case, the control panel acts as a USB-RS485 adapter.

Installing option modules

WARNING! Obey the instructions in chapter *Safety instructions*. If you ignore them, injury or death, or damage to the equipment can occur.

1. Stop the drive and do the steps in section *Precautions before electrical work* on page *16* before you start the work.

Option slot 3 (embedded fieldbus adapter modules)

The drive is delivered with the standard embedded fieldbus adapter module CEIA-01 installed. If you have ordered another optional module, remove the CEIA-01 module by carefully bending the retaining clips to the sides while pulling the module outward, and put the other module carefully into its position.

Option slot 2 (I/O extension modules)

1. Put the module carefully into its position on the control unit.
2. Tighten the mounting screw.
3. Tighten the grounding screw (CHASSIS) to **0.8** N·m. **Note:** The screw grounds the module. It is necessary for fulfilling the EMC requirements and for correct operation of the module.

Option slot 1 (fieldbus adapter modules)

1. Put the module carefully into its position on the control unit.
2. Tighten the mounting screw (CHASSIS) to **0.8** N·m. **Note:** The screw tightens the connections and grounds the module. It is necessary for fulfilling the EMC requirements and for correct operation of the module.

Wiring the optional modules

See the appropriate optional module manual for specific installation and wiring instructions.

7

Control unit

Contents of this chapter

This chapter contains the default I/O connection diagram, descriptions of the terminals and technical data for the drive control unit (CCU-12)

Layout

The layout of the external control connection terminals on the drive module control unit are shown below.

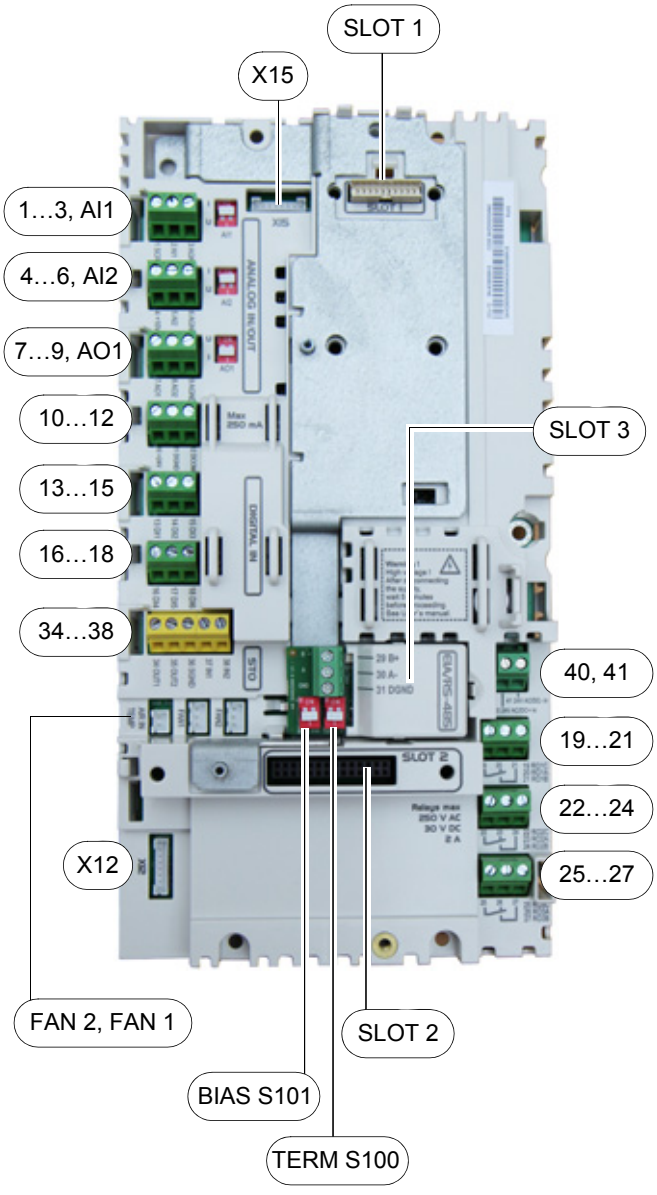

SLOT 1	
Option slot 1 (fieldbus adapter modules)	
ANALOG IN/OUT	
1…3	Analog input 1
AI1	Current/Voltage selection switch for analog input 1
4…6	Analog input 2
AI2	Current/Voltage selection switch for analog input 2
7…9	Analog outputs
AO1	Current/Voltage selection switch for analog output 1
10…12	Auxiliary voltage output
DIGITAL IN	
13…18	Digital inputs
STO	
34…38	Safe torque off connection
FAN2	Internal fan 2 connection
FAN1	Internal fan 1 connection
X12	Panel port (control panel connection, wired at the factory to the control panel)
X15	Reserved to internal use.
SLOT 3	
Embedded EIA/R5-485 fieldbus module (CEIA-01) is installed on SLOT 3 as standard.	
BIAS S101	Bias resistor switch
TERM S100	End termination switch
29…31	Connection terminals of the CEIA-01
SLOT 2	
Option slot 2 (I/O extension modules)	
40, 41	24 V AC/DC external power input
RO1 … R03	
19…21	Relay output 1 (RO1)
22…24	Relay output 2 (RO2)
25…27	Relay output 3 (RO3)

Default I/O connection diagram

The default I/O connections of the ABB Standard macro are shown below.

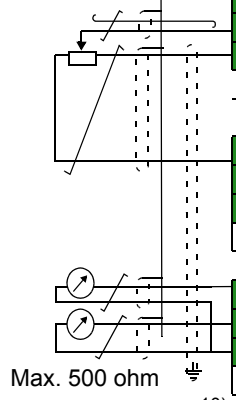

Analog input 1

1	SCR	Signal cable shield (screen)
2	AI1	Output frequency/speed reference 1: 0…10 V [5]
3	AGND	Analog input circuit common
AI1	AI1	Current/Voltage selection for analog input 1 [1]

Analog input 2

4	+10V	Reference voltage 10 V DC
5	AI2	Not configured
6	AGND	Analog input circuit common
AI2	AI2	Current/Voltage selection for analog input 2 [2]

Analog outputs

7	AO1	**Output frequency:** 0…20 mA
8	AO2	**Output current:** 0…20 mA
9	AGND	Analog output circuit common
AO1	AO1	Voltage/Current selection for analog output 1 [3]

10) Auxiliary voltage output

10	+24V	Auxiliary voltage output +24 V DC, max. 250 mA [4]
11	DGND	Auxiliary voltage output common
12	DCOM	Digital input common for all

8)

Programmable digital inputs DI1…DI3

13	DI1	**Stop (0) / Start (1)**
14	DI2	**Forward (0) / Reverse (1)**
15	DI3	**Constant frequency/speed selection** [6]

Programmable digital inputs DI4…DI6

16	DI4	**Constant frequency/speed selection** [6]
17	DI5	**Ramp set1 (0) / Ramp set 2 (1)** [7]
18	DI6	Not configured

9)

Relay outputs

19	RO1C	**Ready run**
20	RO1A	250 V AC / 30 V DC
21	RO1B	2 A
22	RO2C	**Running**
23	RO2A	250 V AC / 30 V DC
24	RO2B	2 A
25	RO3C	**Fault (-1)**
26	RO3A	250 V AC / 30 V DC
27	RO3B	2 A

EIA/5-485

29	B+	Embedded Modbus/RTU (EIA-485)
30	A-	
31	DGND	
TERM	TERM	Serial data link termination switch
BIAS	BIAS	Serial data link bias resistors switch

Safe torque off

8)

34	OUT1	Safe torque off. Factory connection: Both circuits must be closed for the drive to start. See chapter *Safe torque off function*.
35	OUT2	
36	SGND	
37	IN1	
38	IN2	

External power input

40	24V AC/D+	24 V AC/DC, 1.5 A
41	24V AC/DC-	

Notes:

1. Current [0(4)…20 mA, R_{in} = 100 ohm] or voltage [0(2)…10 V, R_{in} > 200 kohm] input selected with switch AI1. Change of setting requires changing the corresponding parameter.
2. Current [0(4)…20 mA, R_{in} = 100 ohm] or voltage [0(2)…10 V, R_{in} > 200 kohm] input selected with switch AI2. Change of setting requires changing the corresponding parameter.
3. Current [0(4)…20 mA, R_{in} = 100 ohm] or voltage [0(2)…10 V, R_{in} > 200 kohm] output selected with switch AO1. Change of setting requires changing the corresponding parameter.
4. Total load capacity of the Auxiliary voltage output +24V (X2:10) is 6.0 W (250 mA / 24 V) minus the power taken by the option modules installed on the control unit.
5. AI1 is used as a speed reference if vector control is selected.
6. In scalar control (default): See **Menu - Primary settings** - **Start, stop, reference** - **Constant frequencies** or parameter group 28 Frequency reference chain.
   In vector control: See **Menu - Primary setting - Start, stop, reference** - **Constant speeds** or parameter group 22 Speed reference selection.

DI3	DI4	Operation/Parameter	
		Scalar control (default)	**Vector control**
0	0	Set frequency through AI1	Set speed through AI1
1	0	28.26 Constant frequency 1	22.26 Constant speed 1
0	1	28.27 Constant frequency 2	22.27 Constant speed 2
1	1	28.28 Constant frequency 3	22.28 Constant speed 3

7. In scalar control (default): See **Menu - Primary settings** - **Ramps** or parameter group 28 Frequency reference chain.
   In vector control: See **Menu - Primary settings** - **Ramps** or parameter group 23 Speed reference ramp.

DI5	Ramp set	Parameters	
		Scalar control (default)	**Vector control**
0	1	28.72 Freq acceleration time 1 28.73 Freq deceleration time 1	23.12 Acceleration time 1 23.13 Deceleration time 1
1	2	28.74 Freq acceleration time 2 28.75 Freq deceleration time 2	23.14 Acceleration time 2 23.15 Deceleration time 2

8. Connected with jumpers at the factory unless with options +L537 and +Q951.
9. N**ote:** Use shielded twisted-pair cables for digital signals.
10. Ground the outer shield of the cable 360 degrees under the grounding clamp on the grounding shelf for the control cables.

Further information on the usage of the connectors and switches is given in the sections below.

Switches

Switch	Description	Position	
AI1	Determines whether analog input AI1 is used as a voltage or current input.	I U AI1	Voltage (U) (**default**)
		I U AI1	Current (I)
AI2	Determines whether analog input AI2 is used as a voltage or current input.	I U AI2	Voltage (U)
		I U AI2	Current (I) (**default**)
AO1	Determines whether analog output AO1 is used as a current or voltage output.	I U AO1	Current (I) (**default**)
		I U AO1	Voltage (U)
TERM	Drive-to-drive link termination. Must be set to the terminated (ON) position when the drive (or another device) is the first or last unit on the link.	ON TERM	Bus not terminated (**default**)
		ON TERM	Bus terminated
BIAS	Switches on the biasing voltages to the bus. One (and only one) device, preferably at the end of the bus must have the bias on.	ON BIAS	Bias off (**default**)
		ON BIAS	Bias on

PNP configuration for digital inputs (DIGITAL IN)

Internal and external +24 V power supply connections for PNP configuration are shown in the figure below.

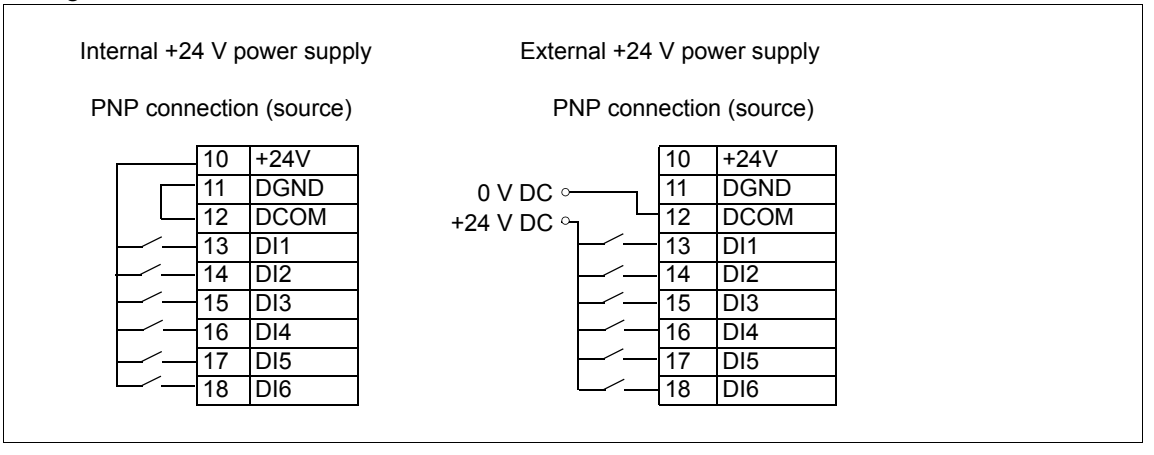

NPN configuration for digital inputs (DIGITAL IN)

Internal and external +24 V power supply connections for NPN configuration are shown in the figure below.

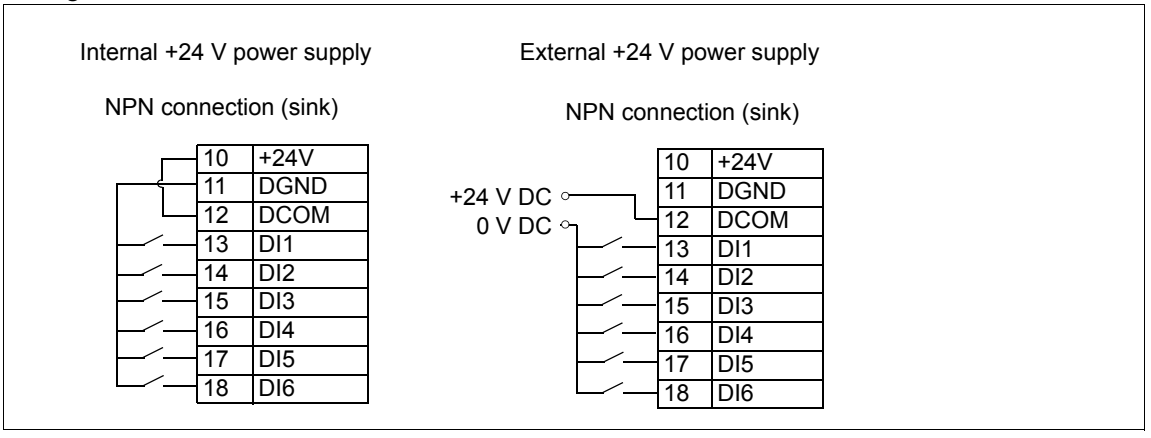

Connection for obtaining 0…10 V from analog output 2 (ANALOG IN/OUT)

To obtain 0…10 V from analog output AO2, connect a 500 ohm resistor (or two 1 kohm resistors in parallel) between analog output AO2 and analog common ground AGND.

Examples are shown in the figure below.

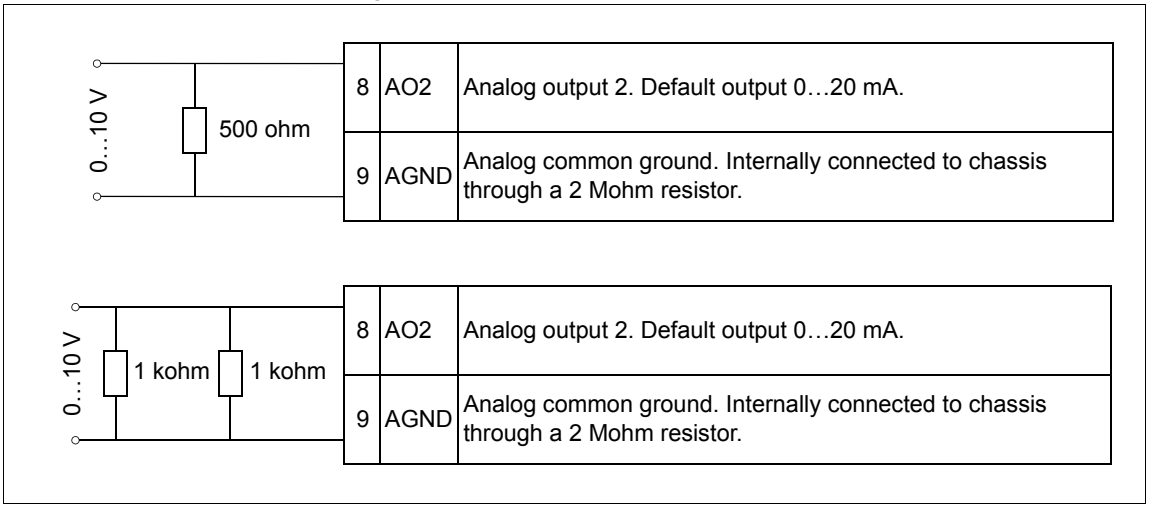

Connection examples of two-wire and three-wire sensors to analog input 2 (ANALOG IN/OUT)

Hand/Auto, Hand/PID, and PID macros use analog input AI2.

Note: The maximum capability of the auxiliary voltage output (24 V DC [250 mA]) must not be exceeded.

An example of a two-wire sensor/transmitter supplied by the drive auxiliary voltage output is shown below. Set the input signal to 4…20 mA, not 0…20 mA

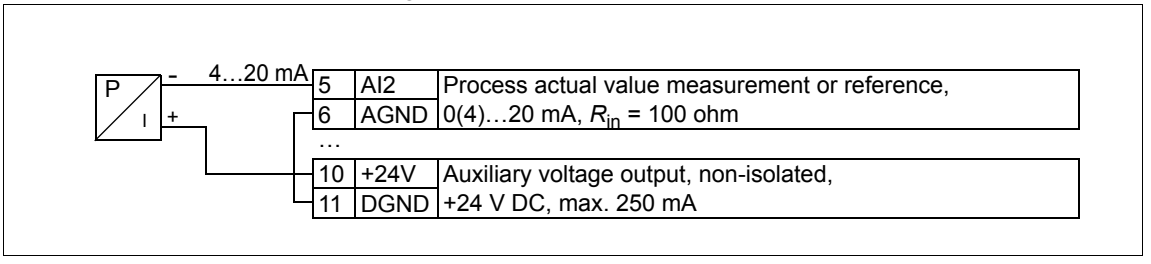

An example of a three-wire sensor/transmitter supplied by the drive auxiliary voltage output is shown below.

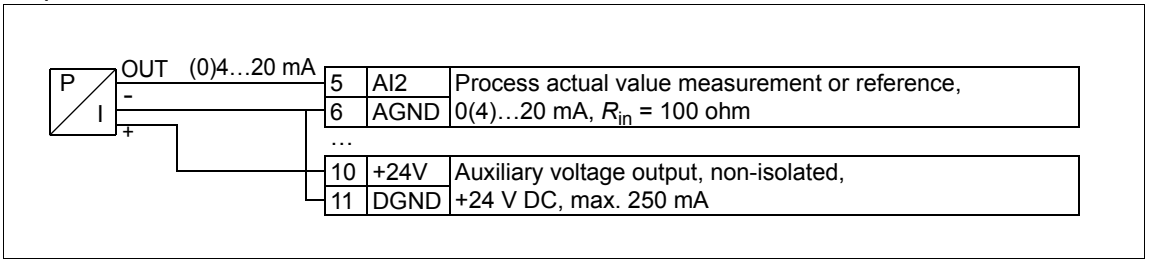

DI6 as frequency input

If DI6 is used as a frequency input, see the firmware manual for how to set parameters accordingly.

AI1 and AI2 as Pt100, Pt1000, Ni1000, KTY83 and KTY84 sensor inputs (ANALOG IN/OUT)

One, two or three Pt100 sensors; one, two or three Pt1000 sensors; or one Ni1000, KTY83 or KTY84 sensor for motor temperature measurement can be connected between an analog input and output as shown below. Do not connect both ends of the cable shields directly to ground. If a capacitor cannot be used at one end, leave that end of the shield unconnected.

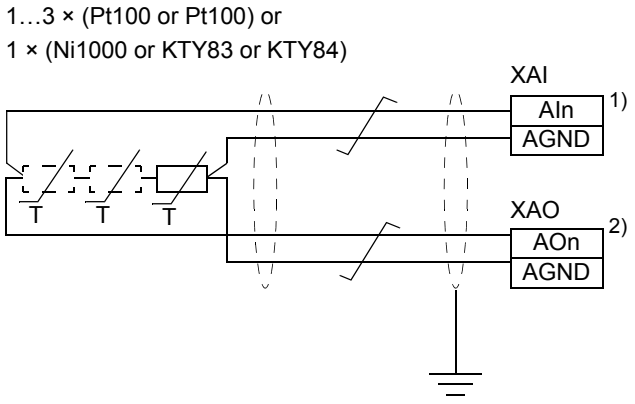

1. Set the input type to voltage with switch S1 for analog input AI1or with S2 for analog input AI2. Set the appropriate analog input unit to V (volt) in parameter group **12 Standard AI**.
2. Select the excitation mode in parameter group **13 Standard AO**.

WARNING! As the inputs pictured above are not insulated according to IEC 60664, the connection of the motor temperature sensor requires double or reinforced insulation between motor live parts and the sensor. If the assembly does not fulfill the requirement, the I/O board terminals must be protected against contact and must not be connected to other equipment or the temperature sensor must be isolated from the I/O terminals.

Safe torque off (STO)

For the drive to start, both connections (+24 V DC to IN1 and +24 V DC to IN2) must be closed. By default, the terminal block has jumpers to close the circuit.

Remove the jumpers before connecting an external Safe torque off circuitry to the drive. See also chapter *Safe torque off function* on page *137*.

Note: Only 24 V DC can be used for STO. Only PNP input configuration can be used.

Technical data

External power supply Term. 40, 41	Maximum power: 36 W, 1.50 A at 24 V AC/DC ±10% as standard Terminal size: 0.14…2.5 mm^2
+24 V DC output (Term. 10)	Total load capacity of this outputs is 6.0 W (250 mA / 24 V) minus the power taken by the option modules installed on board. Terminal size: 0.14…2.5 mm^2
Digital inputs DI1…DI6 (Term. 13…18)	Input type: NPN/PNP Terminal size: 0.14…2.5 mm^2 DI1…DI5 (Term.13…17) 12/24 V DC logic levels: “0” < 4 V, “1” > 8 V R_{in}: 2,68 kohm Hardware filtering: 0.04 ms, digital filtering: 2 ms sampling DI6 (Term.18) Can be used as a digital or frequency input. 12/24 V DC logic levels: “0” < 3 V, “1” > 8 V R_{in}: 6.2 kohm Max. frequency 16 kHz Symmetrical signal (duty cycle D = 0.50)
Relay outputs RO1…RO3 (Term. 19…27)	250 V AC / 30 V DC, 2 A Terminal size: 0.14…2.5 mm^2
Analog inputs AI1 and AI2 (Term. 2 and 5)	Current/voltage input mode selected with a dip switch, see page *86*. Current input: 0(4)…20 mA, R_{in}: 100 ohm Voltage input: 0(2)…10 V, R_{in}: > 200 kohm Terminal size: 0.14…2.5 mm^2 Inaccuracy: typical ±1%, max. ±1.5% of full scale Inaccuracy for Pt100 sensors: 10 °C (50 °F)
Analog outputs AO1 and AO2 (Term. 7 and 8)	Current/voltage output mode for AO1 selected with a dip switch, see page *84*. Current output: 0…20 mA, R_{load}: < 500 ohm Voltage input: 0…10 V, R_{load}: > 100 kohm (AO1 only) Terminal size: 0.14…2.5 mm^2 Inaccuracy: ±1% of full scale (in voltage and current modes)
Reference voltage output for analog inputs +10V DC (Term. 4)	Max. 20 mA output Inaccuracy: ±1%
Safe torque off (STO) inputs IN1 and IN2 (Term. 37 and 38)	24 V DC logic levels: “0” < 5 V, “1” > 13 V R_{in}: 2.47 kohm Terminal size: 0.14…2.5 mm^2
Control panel - drive connection	EIA-485, male RJ-45 connector, max. cable length 100 m
Control panel - PC connection	USB Type Mini-B, max. cable length 2 m

Isolation areas

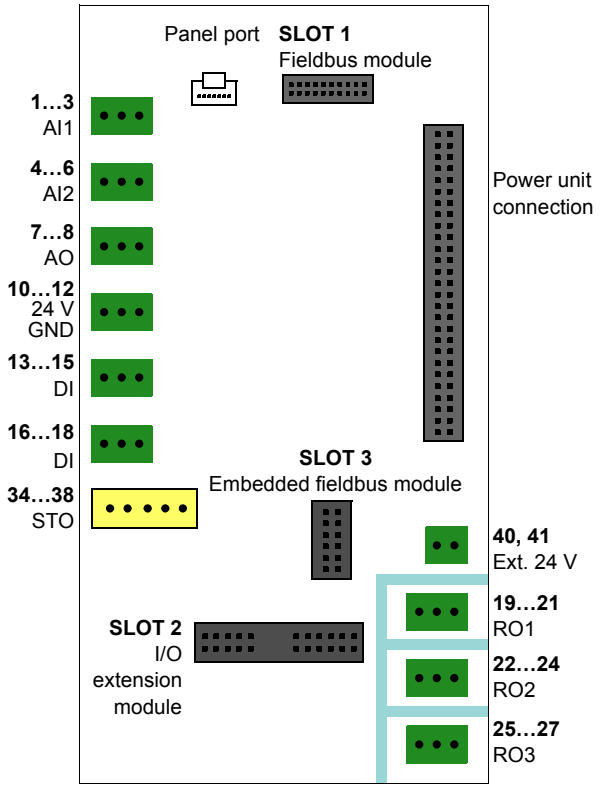

Symbol	Description
	Reinforced insulation (IEC/EN 61800-5-1:2007)

The terminals on the control board fulfill the Protective Extra Low Voltage (PELV) requirements (EN 50178): There is reinforced insulation between the user terminals which only accept ELV voltages and terminals that accept higher voltages (relay outputs).

Note: There is reinforced insulation also between the individual relay outputs.

Note: There is reinforced insulation on the power unit.

8

Installation checklist

Contents of this chapter

This chapter contains an installation checklist which you must complete before you start up the drive.

Warnings

WARNING! Obey the instructions in chapter *Safety instructions*. If you ignore them, injury or death, or damage to the equipment can occur.

Checklist

Do the steps in section *Precautions before electrical work* on page *16* before you start the work. Go through the checklist together with another person..

Check that …	☑
The ambient operating conditions meet the specifications given in chapter *Technical data*.	☐
The drive cabinet has been fixed to floor, and if necessary due to vibration etc, also from top to the wall or roof.	☐
The cooling air will flow freely in and out of the drive cabinet,	☐
If the drive has been stored over one year: The electrolytic DC capacitors in the DC link of the drive have been reformed. See *Converter module capacitor reforming instructions* (3BFE64059629 [English]).	☐

Check that …	☑
There is an adequately sized protective earth (ground) conductor between the drive and the switchboard, and the conductor has been connected to appropriate terminal. Proper grounding has also been measured according to the regulations.	☐
There is an adequately sized protective earth (ground) conductor between the motor and the drive, and the conductor has been connected to appropriate terminal. Proper grounding has also been measured according to the regulations.	☐
The supply voltage matches the nominal input voltage of the drive. Check the type designation label.	☐
The voltage setting of the auxiliary voltage transformer (T21) is correct. See page *76*.	☐
The input power cable has been connected to the appropriate terminals, the phase order is right, and the terminals have been tightened. (Pull the conductors to check.)	☐
The motor cable has been connected to the appropriate terminals, the phase order is right, and the terminals have been tightened. (Pull the conductors to check.)	☐
The motor cable (and brake resistor cable, if present) has been routed away from other cables.	☐
No power factor compensation capacitors have been connected to the motor cable.	☐
If a drive bypass connection will be used: The direct-on-line contactor of the motor and the drive output contactor are either mechanically or electrically interlocked, ie, cannot be closed simultaneously.	☐
The control cables have been connected to the appropriate terminals, and the terminals have been tightened. (Pull the conductors to check.)	☐
There are no tools, foreign objects or dust from drilling inside the drive.	☐
All shrouds and cover of the motor connection box are in place. Cabinet doors have been closed.	☐
The motor and the driven equipment are ready for start.	☐

9

Start-up

Contents of this chapter

This chapter contains the start-up procedure of the drive. The default device designations (if any) are given in brackets after the name, for example “main switch-disconnector (Q1)”. The same device designations are also used in the circuit diagrams, typically.

Start-up procedure

Action	☑
Safety	
WARNING! Obey the safety instructions during the start-up procedure. See chapter *Safety instructions* on page *13.*	☐
Checks/Settings with no voltage connected	
Check the mechanical and electrical installation of the drive.See *Installation checklist* on page *89.*	☐
Powering up the drive	
Close the cabinet doors.	☐
Make sure that it is safe to connect voltage. Ensure that: • cabinet doors are closed • nobody is working on the drive or circuits that have been wired from outside into the drive cabinet • cover of the motor terminal box is on.	☐
Close the main switch-disconnector (Q1).	☐

Action	☑
Setting up the drive parameters, and performing the first start	
Setup the drive control program. See section *Start-up with the First start assistant on an assistant panel* on page *92*.	☐
Drives with main contactor (Q2, option +F250): Close the main contactor by turning the operating switch on the cabinet door from OFF into ON position.	☐
Perform the first start of the drive and motor.	☐
Stop the motor and drive.	☐
Drives with with a fieldbus adapter module (optional): Set the fieldbus parameters. Activate the appropriate assistant in the control program, or see the user's manual of the fieldbus adapter module, and the drive firmware manual. Not all control programs include assistants. Check that the communication works between the drive and the PLC.	☐
On-load checks	
Check that the cooling fans rotate freely in the right direction, and the air flows upwards. A paper sheet set on the intake (door) gratings stays. The fans run noiselessly.	☐
Check that the motor starts. stops and follows the speed reference in right direction when controlled with the control panel.	☐
Check that the motor starts. stops and follows the speed reference in right direction when controlled through the customer-specific I/O or fieldbus.	☐
Drives in which the Safe torque off control circuit is connected: Test and validate the operation of the Safe torque off function. *Start-up including acceptance test* on page *143*.	☐
Drives with an emergency stop circuit (options +Q951): Test and validate the operation of the emergency-stop circuit. See the delivery specific circuit diagrams and wiring, start-up and operating instructions of the option (see page *59*).	☐

Start-up with the First start assistant on an assistant panel

This section describes the start-up of the drive using the First start assistant on the assistant control panel.

Complete documentation of the drive firmware: program features, parameters and fault tracing can be found in *ACS580 firmware manual* (3AXD50000016097 [English]). For more information on the assistant panels, see *ACS-AP-x Assistant control panels user's manual* (3AUA0000085685 [English]).

Safety	
☐	Make sure that the installation work is complete. Make sure that the cabinet door is closed.
☐	Check that the starting of the motor does not cause any danger. **De-couple the driven machine** if there is a risk of damage in case of an incorrect direction of rotation.

Hints on using the assistant control panel		
	The two commands at the bottom of the display (**Options** and **Menu** in the figure on the right), show the functions of the two softkeys and located below the display. The commands assigned to the softkeys vary depending on the context. Use keys , , and to move the cursor and/or change values depending on the active view. Key shows a context-sensitive help page.	
1 – First start assistant guided settings: Language, date and time, and motor nominal values		
☐	Have the motor name plate data at hand. Power up the drive.	
☐	The First start assistant guides you through the start-up. The assistant starts automatically. Wait until the control panel enters the view shown on the right. Select the language you want to use by highlighting it (if not already highlighted) and pressing (**OK**). **Note:** After you have selected the language, it takes a few minutes for the control panel to wake up.	
☐	Select **Start set-up** and press (**Next**).	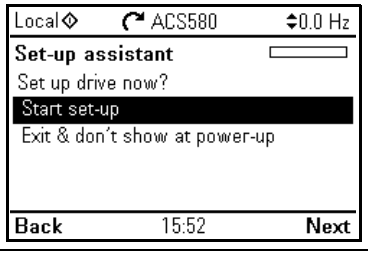
☐	Select the localization you want to use and press (**Next**).	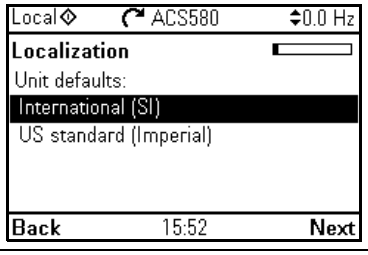
☐	Change the units shown on the panel if needed. • Go to the edit view of a selected row by pressing . • Scroll the view with and . Go to the next view by pressing (**Next**).	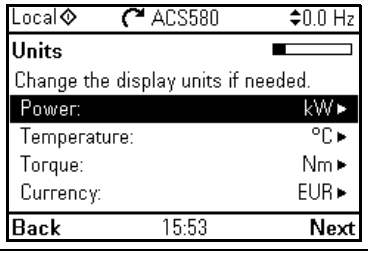
☐	Set the date and time as well as date and time display formats. • Go to the edit view of a selected row by pressing . • Scroll the view with and . Go to the next view by pressing (**Next**).	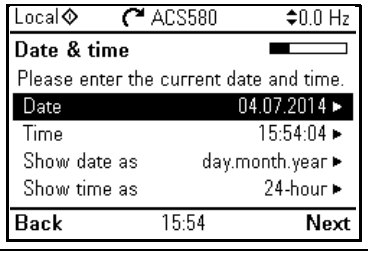

☐ In an edit view:

- Use ◄ and ► to move the cursor left and right.
- Use ▲ and ▼ to change the value.
- Press (**Save**) to accept the new setting, or press (**Cancel**) to go back to the previous view without making changes.

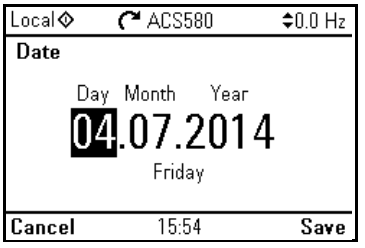

☐ To give the drive a name that will be shown at the top, press ►.
If you do not want to change the default name (ACS580), continue straight to the set-up of the motor nominal values by pressing (**Next**).
For information on editing text, see *ACS580 firmware manual* 3AXD50000016097 [English]).

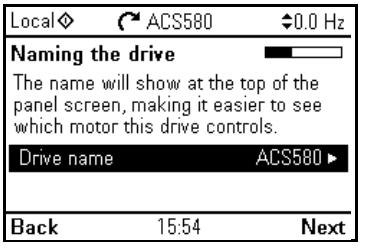

Refer to the motor nameplate for the following nominal value settings of the motor. Enter the values exactly as shown on the motor nameplate.

Example of a nameplate of an induction (asynchronous) motor:

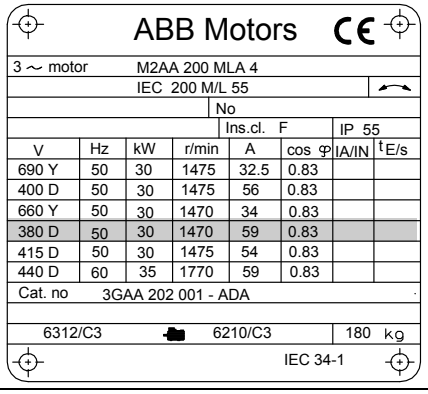

ABB Motors CE

3 ~ motor M2AA 200 MLA 4
IEC 200 M/L 55
No
Ins.cl. F IP 55

V	Hz	kW	r/min	A	cos φ	IA/IN	tE/s
690 Y	50	30	1475	32.5	0.83		
400 D	50	30	1475	56	0.83		
660 Y	50	30	1470	34	0.83		
380 D	50	30	1470	59	0.83		
415 D	50	30	1475	54	0.83		
440 D	60	35	1770	59	0.83		

Cat. no 3GAA 202 001 - ADA
6312/C3 6210/C3 180 kg
IEC 34-1

☐ Check that the motor data is correct. Values are predefined on the basis of the drive size but you should verify that they correspond to the motor.
Start with the motor nominal current.
Motor nominal cos Φ and nominal torque are optional.
Press (**Next**) to continue.

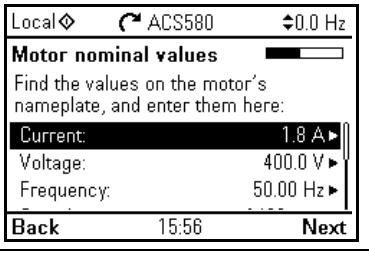

☐ This step is optional, and requires rotating the motor. Do not do this if it could cause any risk, or if the mechanical set-up does not allow it.
To do the direction test, select **Spin the motor** and press (**Next**).

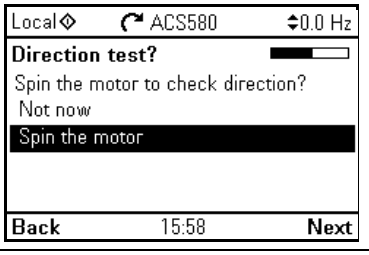

☐ Press the Start key on the panel to start the drive.

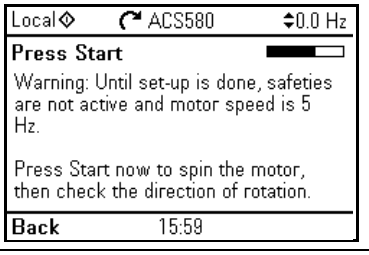

☐	Check the direction of the motor. If it is forward, select **Yes, motor is spinning forward** and press (**Next**) to continue. If the direction is not forward, select **No, fix direction** and press (**Next**) to continue.	
☐	If you want to make a backup of the settings made so far, select **Backup** and press (**Next**). If you do not want to make a backup, select **Not now** and press (**Next**).	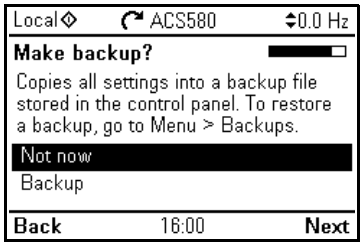
☐	The first start is now complete and the drive is ready for use. Press (**Done**) to enter the Home view.	
☐	The Home view monitoring the values of the selected signals is shown on the panel.	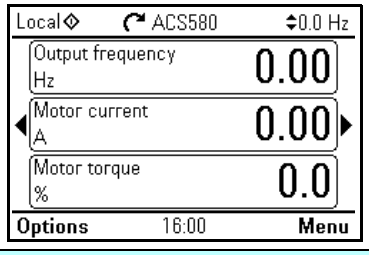
2 – Additional settings in the Primary settings menu		
☐	Make any additional adjustments, for example macro, ramps and limits, starting from the **Main** menu – press (**Menu**) to enter the **Main** menu. Select **Primary settings** and press (**Select**) (or). We recommend that you make at least these additional settings: • Choose a macro or set start, stop and reference values individually • Ramps • Limits With the **Primary settings** menu, you can also adjust settings related to the motor, PID, fieldbus, advanced functions and clock, region and display. In addition, the menu contains an item to reset the panel Home view. To get more information on the **Primary settings** menu items, press ? to open the help page.	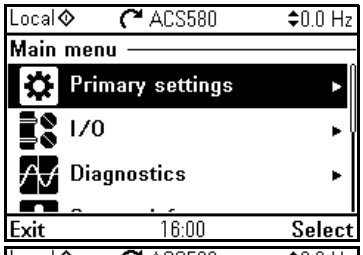 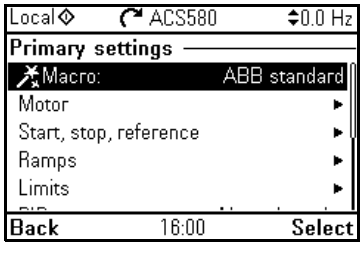

2 – Additional settings: Start, stop and reference values		
☐	If you do not wish to use a macro, define the settings for start, stop and reference: Select **Start, stop, reference** and press (**Select**) (or ▶).	Local ACS580 0.0 Hz **Primary settings** Macro: ABB standard Motor ▶ Start, stop, reference ▶ Ramps ▶ Limits ▶ Back 16:02 Select
☐	Adjust the parameters according to your needs. Select a parameter and, depending on the parameter type, press (**Edit**) or press (**Select**) (or ▶). When you change the settings, you also change the use of the I/O signals in the drive. Make sure the actual I/O wiring and the use of I/O in the control program match each other. You can check the current I/O use in the **I/O** menu under the **Main** menu. After making the adjustments, go back to the **Primary settings** menu by pressing (**Back**).	Local ACS580 0.0 Hz **Start, stop, reference** Reference from: AI1 directly ⚠ AI1 scaling ▶ Start/stop/dir from: DI1 start/stop,... Secondary control location Off ▶ Constant frequencies On ▶ Back 16:02 Edit
2 – Additional settings: Ramps (acceleration and deceleration times for the motor)		
☐	Select **Ramps** and press (**Select**) (or ▶).	Local ACS580 0.0 Hz **Primary settings** Macro: ABB standard Motor ▶ Start, stop, reference ▶ Ramps ▶ Limits ▶ Back 16:02 Select
☐	Adjust the parameters according to your needs. Select a parameter and press (**Edit**). After making the adjustments, go back to the **Primary settings** menu by pressing (**Back**).	Local ACS580 0.0 Hz **Ramps** Acceleration time: 20.000 s Deceleration time: 20.000 s Shape time: 0.100 s Stop mode: Coast ☑ Use two ramp sets Back 16:02 Edit
2 – Additional settings: Limits		
☐	Select **Limits** and press (**Select**) (or ▶).	Local ACS580 0.0 Hz **Primary settings** Macro: ABB standard Motor ▶ Start, stop, reference ▶ Ramps ▶ Limits ▶ Back 16:02 Select
☐	Adjust the parameters according to your needs. Select a parameter and press (**Edit**). After making the adjustments, go back to the **Primary settings** menu by pressing (**Back**).	Local ACS580 0.0 Hz **Limits** Minimum frequency: -50.00 Hz Maximum frequency: 50.00 Hz Maximum current: 3.24 A Back 16:03 Edit

10

Fault tracing

Contents of this chapter

This chapter describes the fault tracing possibilities of the drive.

Warning and fault messages

See the firmware manual for the descriptions, causes and remedies of the drive control program warning and fault messages.

11

Maintenance

Contents of this chapter

This chapter contains preventive maintenance instructions.

Maintenance intervals

The table below shows the maintenance tasks which can be done by the end user. The complete maintenance schedule is available on the Internet (www.abb.com/drivesservices).For more information, consult your local ABB Service representative (www.abb.com/searchchannels).

The maintenance and component replacement intervals are based on the assumption that the equipment is operated within the specified ratings and ambient conditions. ABB recommends annual drive inspections to ensure the highest reliability and optimum performance.

Note: Long term operation near the specified maximum ratings or ambient conditions may require shorter maintenance intervals for certain components. Consult your local ABB Service representative for additional maintenance recommendations.

Descriptions of symbols

Action	Description
I	Visual inspection and maintenance action if needed
P	Performance of on/off-site work (commissioning, tests, measurements or other work)
R	Replacement of component

Recommended annual maintenance actions by the user.

Action	Target
I	IP42 air inlet and outlet meshes on the cabinet doors
R	IP54 air filters on the cabinet doors
P	Quality of supply voltage
I	Spare parts
P	Capacitor reforming, spare modules and spare capacitors
I	Tightness of terminals
I	Dustiness, corrosion or temperature
I	Heat sink cleaning

Recommended maintenance intervals after start-up

Component	Years from start-up							
	3	6	9	12	15	18	20	21
Cooling								
Main cooling fan								
Main cooling fan			R			R		
Auxiliary cooling fan								
Circuit board compartment cooling fans		R		R		R		
Cabinet cooling fan								
Cabinet cooling fan IP54		R		R		R		
Cabinet cooling fan, door		R		R		R		
Aging								
Control panel battery			R			R		

4FPS10000239703

Cleaning the interior of the cabinet

WARNING! Obey the instructions in chapter *Safety instructions*. If you ignore them, injury or death, or damage to the equipment can occur.

WARNING! Use a vacuum cleaner with an antistatic hose and nozzle. Using a normal vacuum cleaner creates static discharges which can damage circuit boards.

1. Stop the drive and do the steps in section *Precautions before electrical work* on page *16* before you start the work.
2. When necessary, clean the interior of the cabinet with a soft brush and a vacuum cleaner.
3. Check the air inlet and outlet meshes/filters of the cabinet. Clean when necessary.
   For IP42 (UL Type 1 Filtered) drives: see section *Cleaning the air inlet (door) meshes (IP42 / UL Type 1 Filtered)* below.
   For IP54 (UL Type 12) drives: see section *Replacing the air filters (IP54 / UL Type 12)*.

Cleaning the air inlet (door) meshes (IP42 / UL Type 1 Filtered)

WARNING! Use a vacuum cleaner with an antistatic hose and nozzle. Using a normal vacuum cleaner creates static discharges which can damage circuit boards.

Check the dustiness of the air inlet meshes. If the dust cannot be removed by vacuum cleaning from outside through the grating holes with a small nozzle, proceed as follows:

1. Remove the fasteners at the top of the grating.
2. Lift the grating and pull it away from the door.
3. Vacuum clean the mesh.
4. Reinstall the mesh and grating in reverse order.

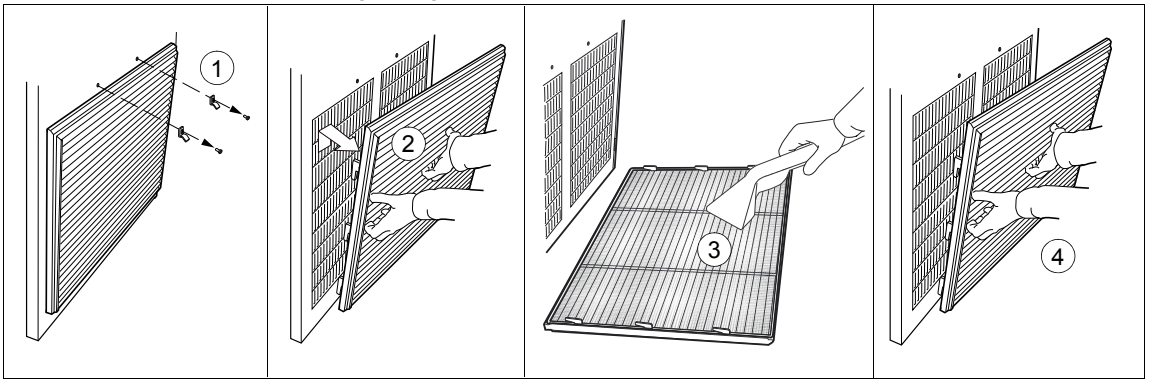

Replacing the air filters (IP54 / UL Type 12)

Check the air filters and replace if necessary (see page 127 for the correct filter types).

Inlet (door) filters (IP54 / UL Type 12)

1. Remove the fasteners at the top of the grating.
2. Lift the grating and pull it away from the door.
3. Remove the air filter mat.
4. Place the new filter mat in the grating the metal wire side facing the door.
5. Reinstall the grating in reverse order.

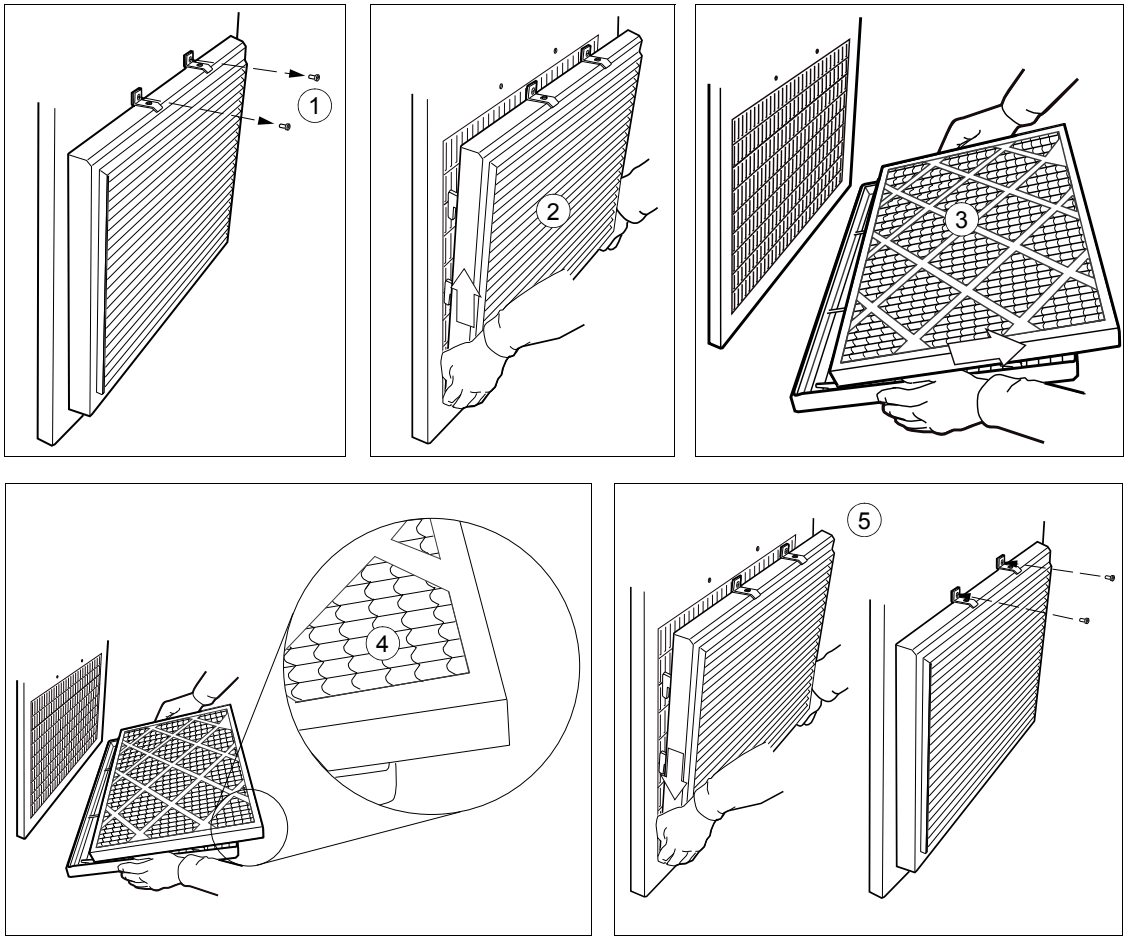

Outlet (roof) filters (IP54 / UL Type 12)

1. Remove the front and back gratings of the fan cubicle by lifting them upwards
2. Remove the air filter mat.
3. Place the new filter mat in the grating.
4. Reinstall the grating in reverse order.

Heatsink

The drive module heatsink fins pick up dust from the cooling air. The drive runs into overtemperature warnings and faults if the heatsink is not clean. When necessary, clean the heatsink as follows.

WARNING! Obey the instructions in chapter *Safety instructions*. If you ignore them, injury or death, or damage to the equipment can occur.

WARNING! Use a vacuum cleaner with antistatic hose and nozzle. Using a normal vacuum cleaner creates static discharges which can damage circuit boards.

1. Stop the drive and do the steps in section *Precautions before electrical work* on page *16* before you start the work.
2. Remove the drive module from the cabinet. See section *Replacing the drive module* on page *108*.
3. Undo the attaching screws of the handle plate of the drive module.
4. Remove the handle plate.
5. Vacuum the interior of the heatsink from the opening.
6. Blow clean compressed air (not humid or oily) upwards from the opening and, at the same time, vacuum from the top of the drive module.
7. Reinstall the handle plate.
8. Install the drive module back into the cabinet.

Fans

The lifespan of the cooling fan of the drive depends on the running time of the fan, ambient temperature and dust concentration. See the firmware manual for the actual signal which indicates the running time of the cooling fan. Reset the running time signal after a fan replacement.

Replacement fans are available from ABB. Do not use other than ABB specified spare parts.

Replacing the cabinet fan

WARNING! Obey the instructions in chapter *Safety instructions*. If you ignore them, injury or death, or damage to the equipment can occur.

1. Stop the drive and do the steps in section *Precautions before electrical work* on page *16* before you start the work.
2. Undo the mounting screws of the grille.
3. Loosen the four mounting screws of the fan mounting plate.
4. Lift the mounting plate off.
5. Unplug the power supply quick connector.
6. Disconnect the fan capacitor wires.
7. Install the new fan in reverse order.

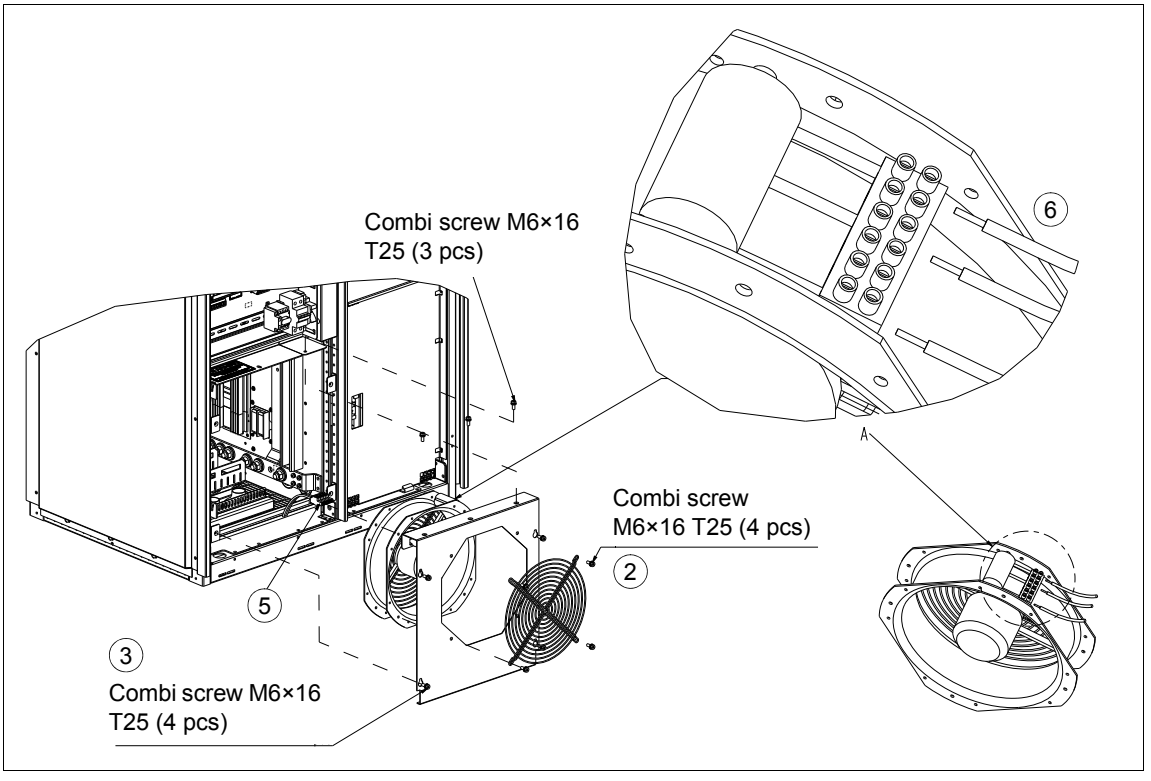

Replacing the drive module main fans

WARNING! Obey the instructions in chapter *Safety instructions*. If you ignore them, injury or death, or damage to the equipment can occur.

1. Stop the drive and do the steps in section *Precautions before electrical work* on page *16* before you start the work.
2. Remove the drive module out of the cabinet as described in section *Replacing the drive module* on page *108*.
3. Open the support legs of the pedestal.
4. Undo the two mounting screws of the fan assembly plate.
5. Tilt the fan assembly plate down.
6. Disconnect the power supply wires of the fans.
7. Remove the fan assembly from the drive module.
8. Undo the mounting screws of the fan(s) and remove the fan(s) from the assembly plate.
9. Install the new fan(s) in reverse order.

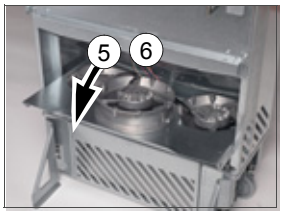

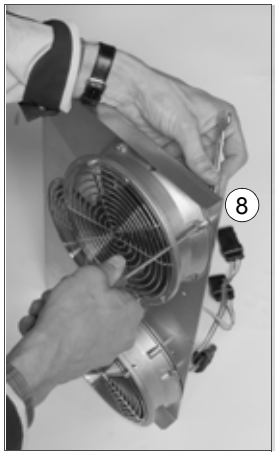

Replacing the circuit board compartment cooling fan

WARNING! Obey the instructions in chapter *Safety instructions*. If you ignore them, injury or death, or damage to the equipment can occur.

1. Stop the drive and do the steps in section *Precautions before electrical work* on page *16* before you start the work.
2. Remove the drive module out of the cabinet as described in section *Replacing the drive module* on page *108*.
3. Undo the fastening screw of the fan enclosure.
4. Unplug the power supply cable of the fan.
5. Install the new fan in reverse order.

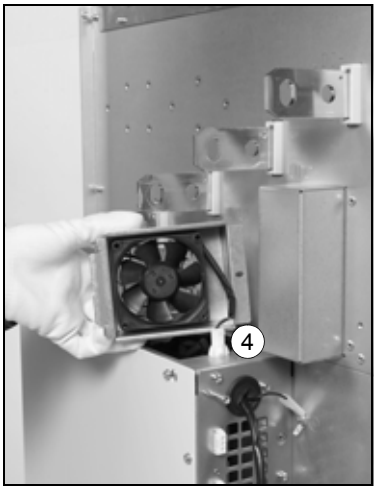

Replacing the IP54 (UL type 12) roof fan

WARNING! Obey the instructions in chapter *Safety instructions*. If you ignore them, injury or death, or damage to the equipment can occur.

1. Stop the drive and do the steps in section *Precautions before electrical work* on page *16* before you start the work.
2. Slide the front and back gratings upwards and remove them.
3. Remove the mounting screws of the upper cover and lift the cover off.
4. Disconnect the fan power supply wires.
5. Remove the mounting screws of the fan.
6. Remove the mounting screws of the fan cover.
7. Lift the fan off.
8. Install the new fan in reverse order.

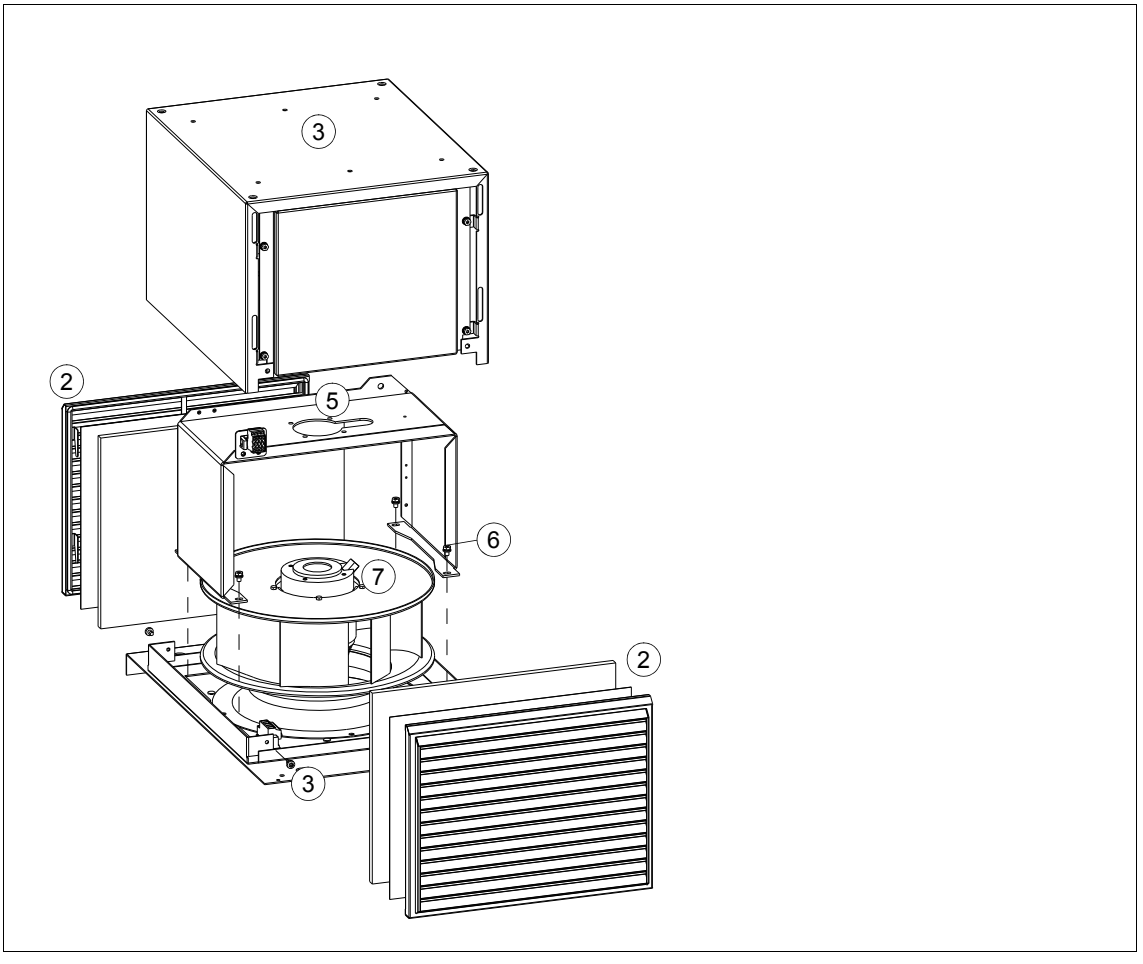

Replacing the drive module

This replacing procedure requires: two persons, installation ramp, a set of screw drivers and a torque wrench with an extension bar.

The drawings show frame R11. The details in frame R10 are slightly different.

WARNING! Obey the instructions in chapter *Safety instructions*. If you ignore them, injury or death, or damage to the equipment can occur.

- Handle the drive module carefully:
  - Use safety shoes with a metal toe cap to avoid foot injury.
  - Lift the drive module only by the lifting lugs.
  - Make sure that the module does not topple over when you move it on the floor: Open the support legs by pressing each leg a little down (1, 2) and turning it aside. Whenever possible secure the module also with chains.
  - Do not tilt the drive module (A). It is **heavy** and its **center of gravity is high.** The module overturns from a sideways tilt of 5 degrees. Do not leave the module unattended on a sloping floor.

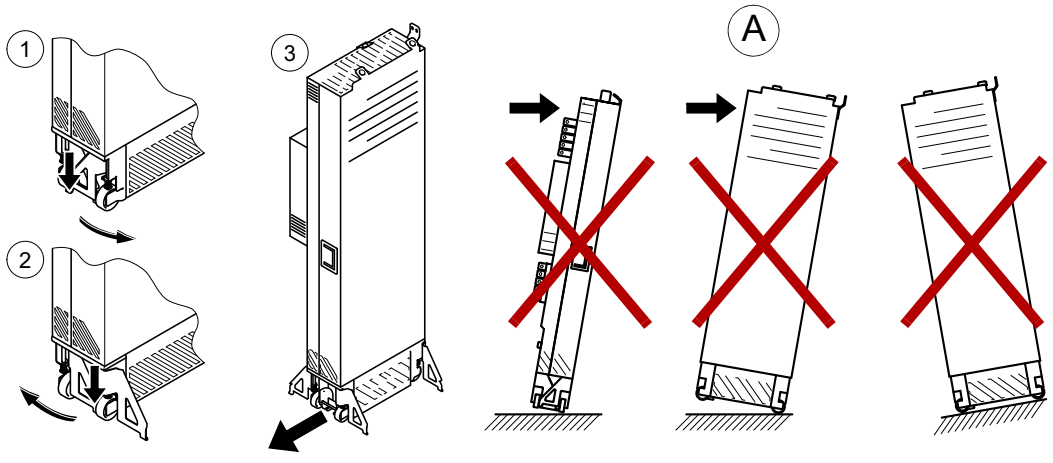

1. Stop the drive and do the steps in section *Precautions before electrical work* on page *16* before you start the work.
2. Unplug quick connector(s) at the right top corner of the control unit mounting plate.
3. Remove the control unit mounting plate.
4. Remove the shroud.
5. Remove the air baffle.
6. Remove the air baffle.
7. Remove the air baffle.
8. Remove the air baffle.
9. Disconnect the drive module input busbars from the cabinet busbars. Combi screw M12, 70 N·m (52 lbf·ft).
10. Disconnect the drive module output busbars from cabinet busbars. Combi screw M12, 70 N·m (52 lbf·ft).

11. Undo the screws that attach the drive module to the cabinet at the top and behind the front support legs.
12. Attach the extraction ramp to the cabinet base with two screws.
13. Attach the drive module lifting lugs to the cabinet lifting lug with chains.
14. Pull the drive module carefully out of the cabinet preferably with help from another person.
15. For frame R11: Remove the clear plastic shroud.
16. Remove the air baffle.
17. Install the new module in reverse order.

R10 and R11

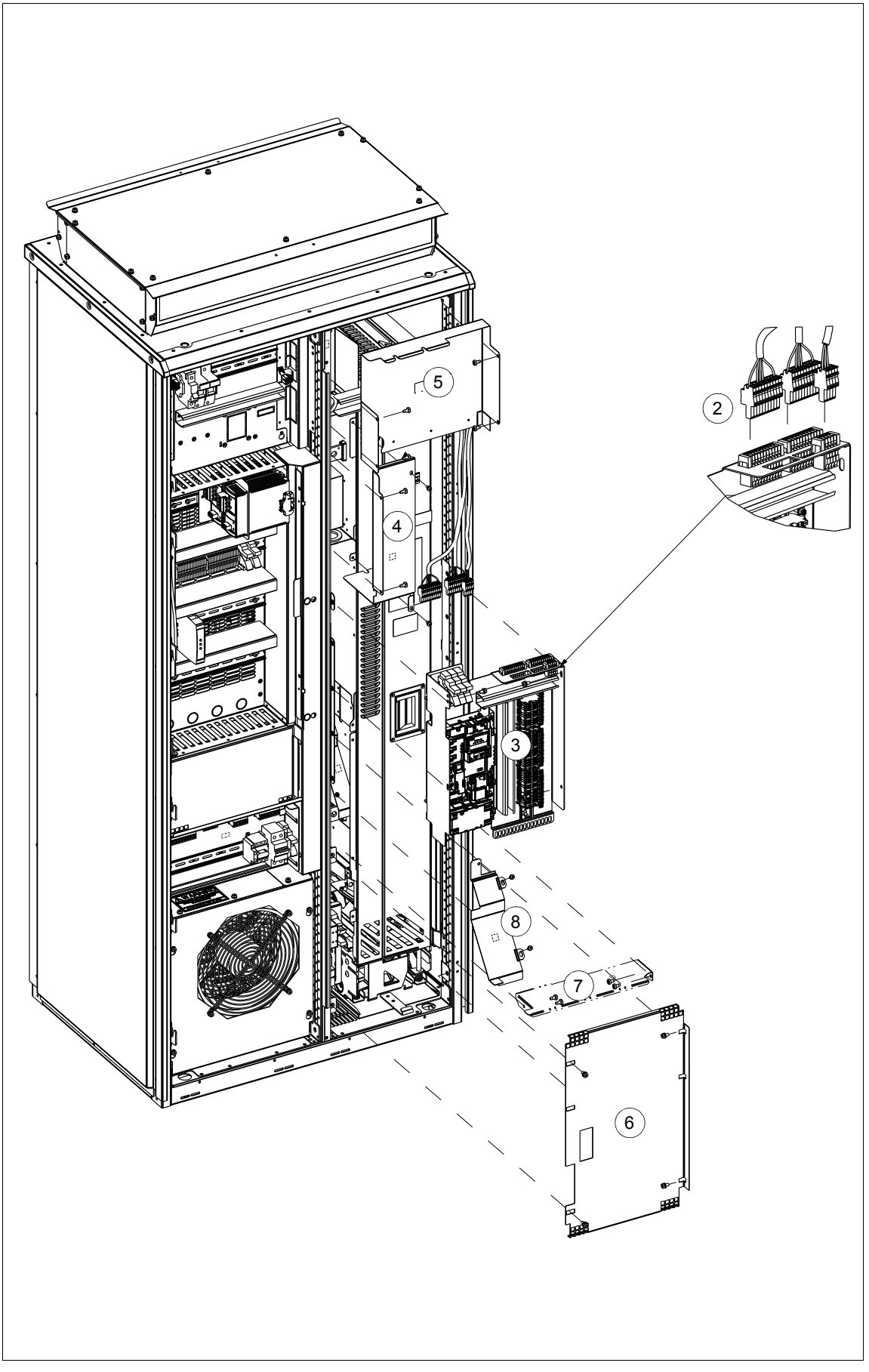

R10 and R11

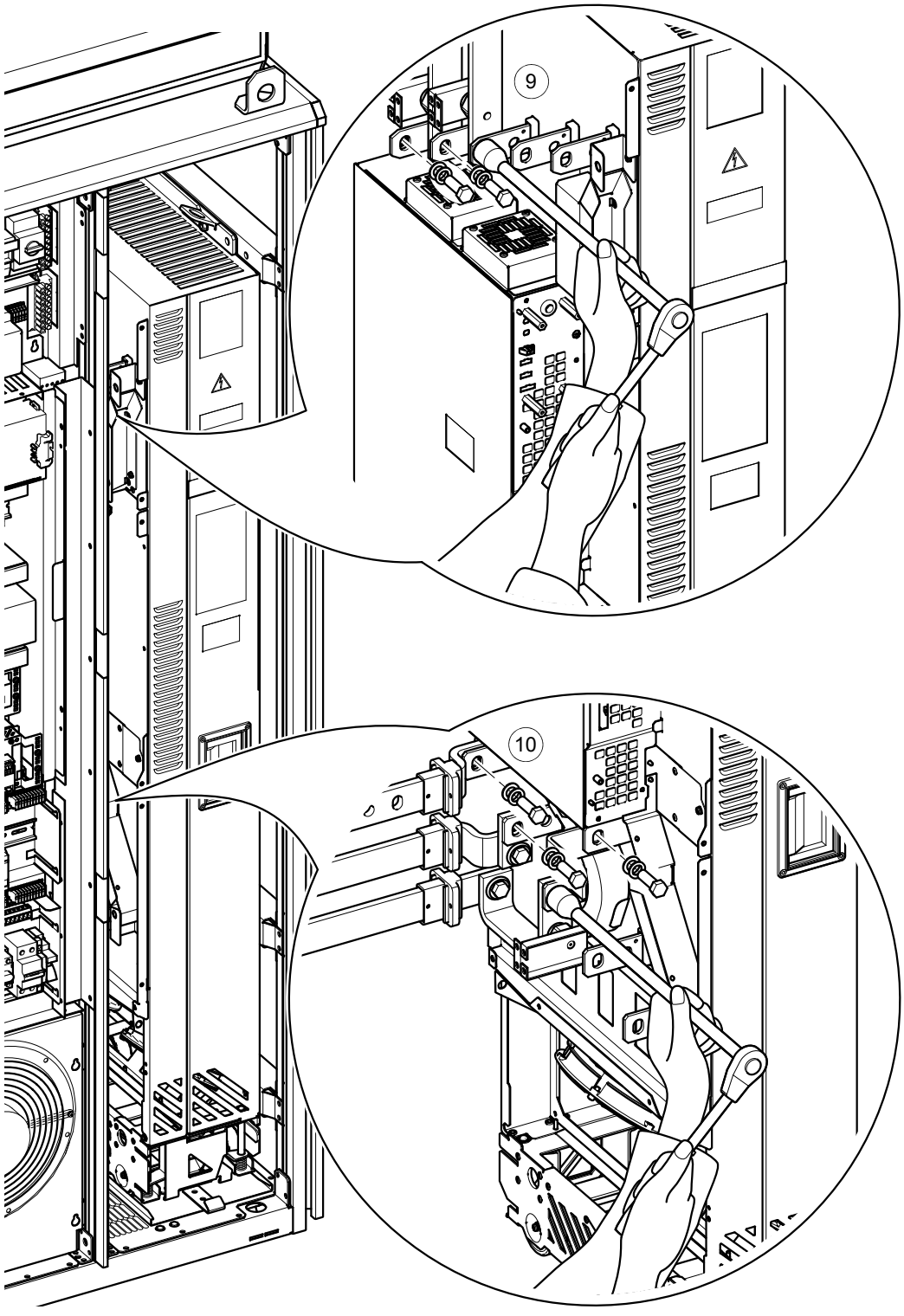

R10 and R11

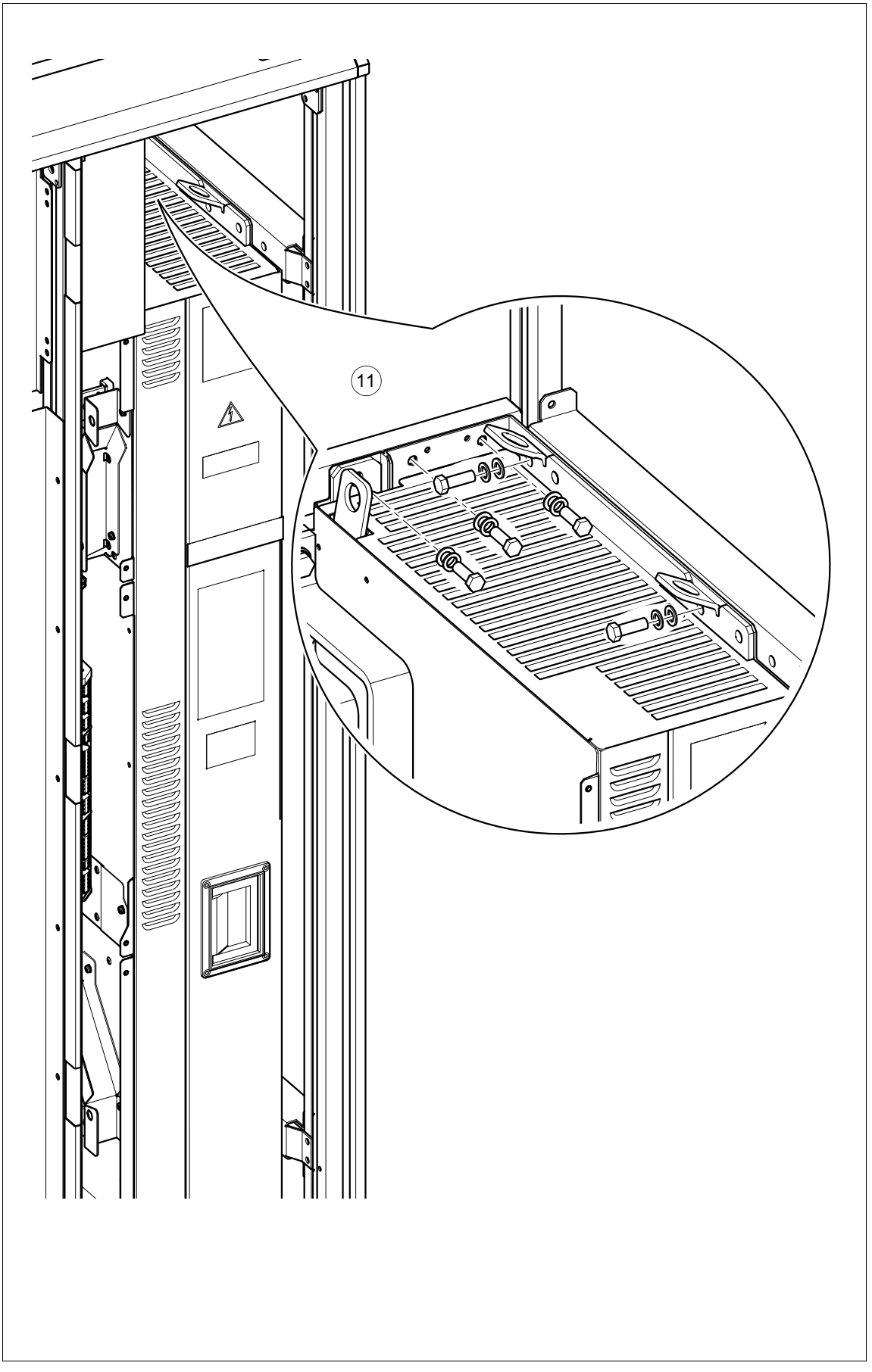

R10 and R11

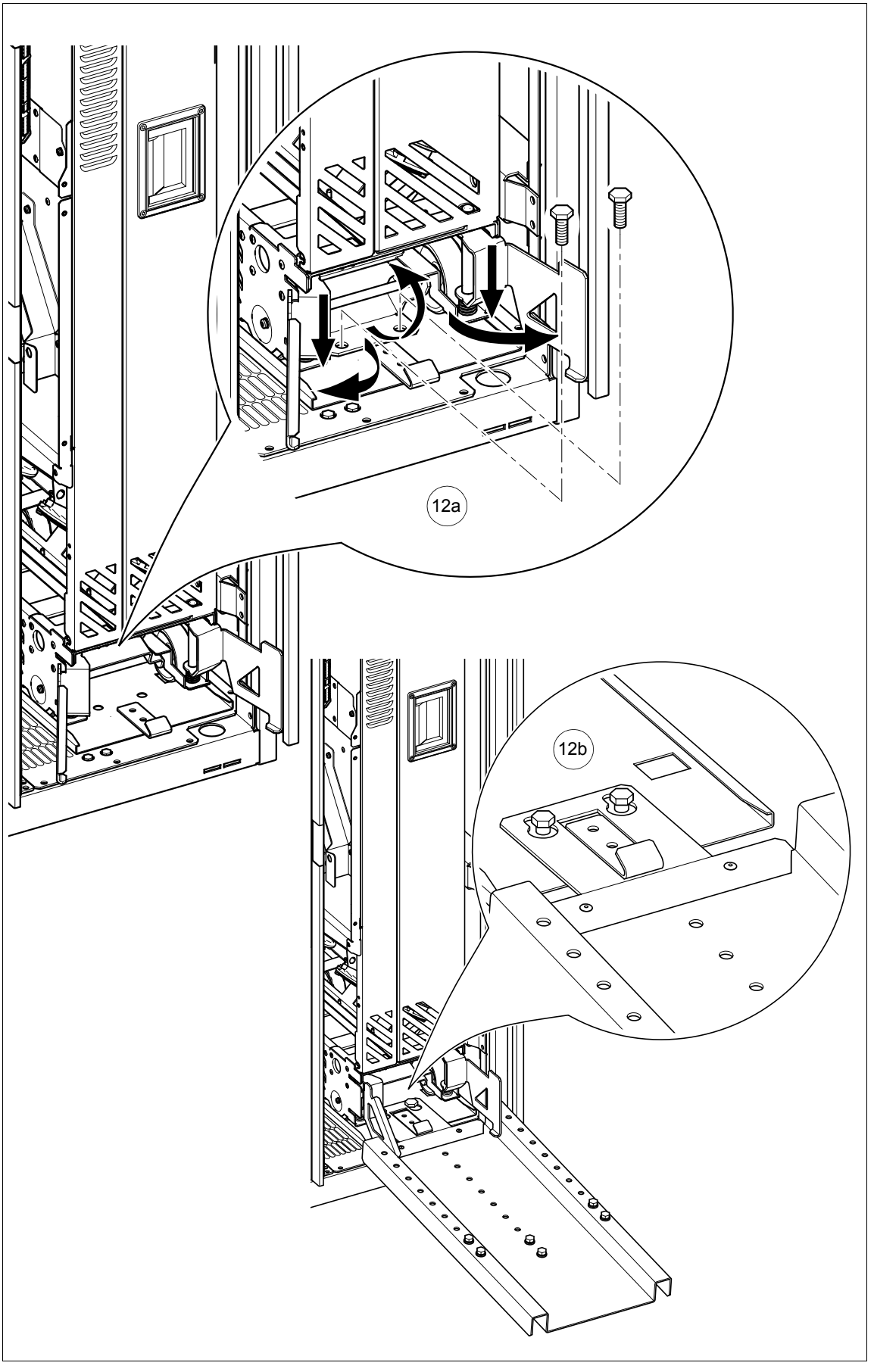

R10 and R11

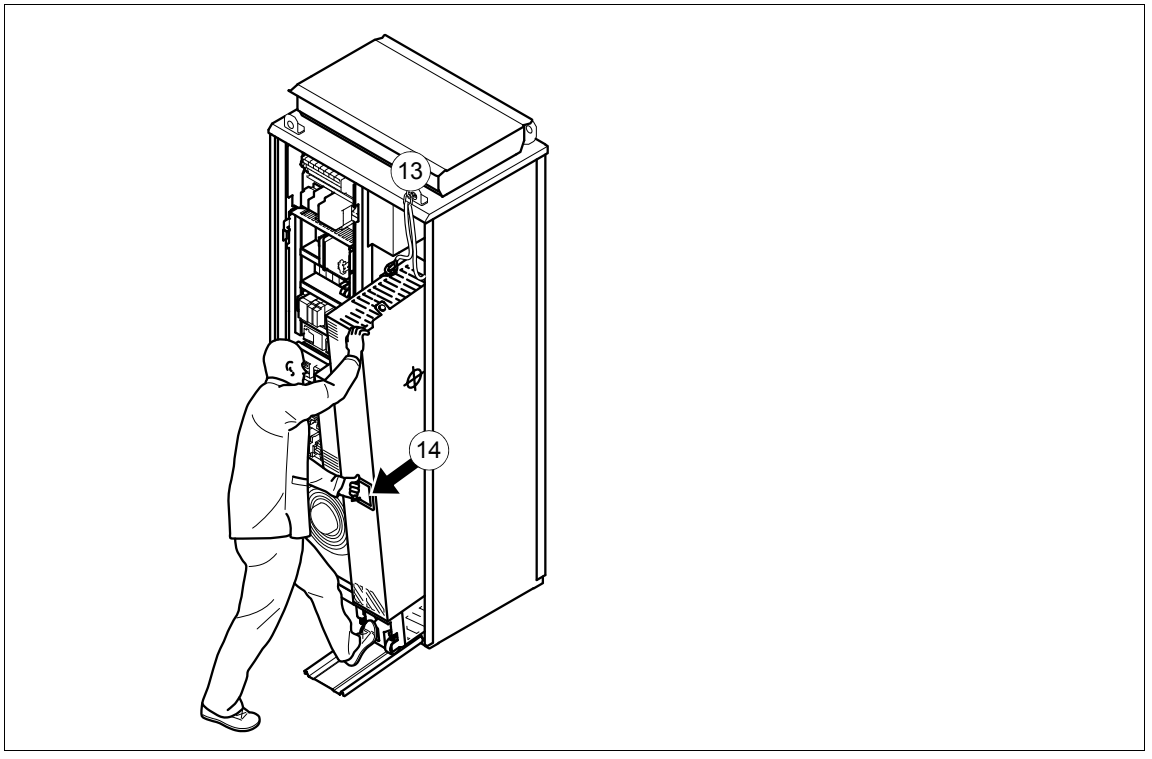

R10 and R11

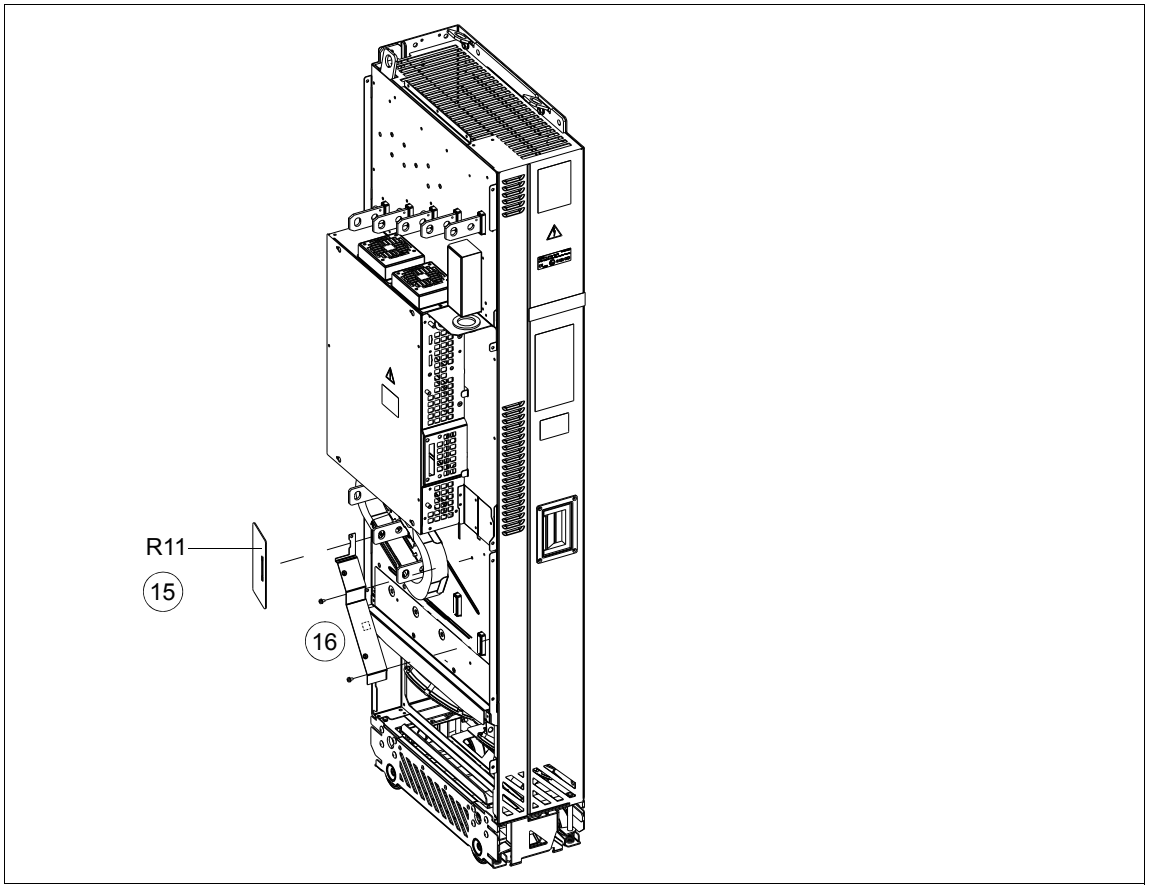

R10 and R11

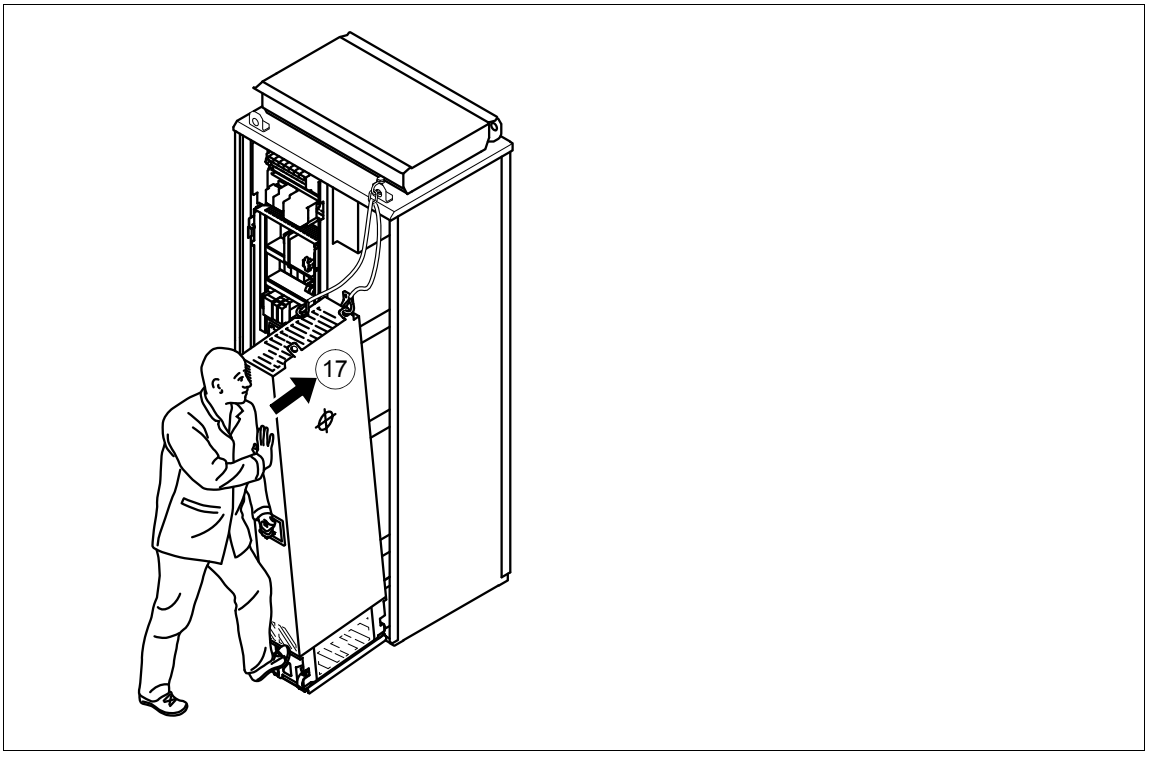

Capacitors

The drive intermediate circuit employs several electrolytic capacitors. Their lifespan depends on the operating time of the drive, loading and ambient temperature. Capacitor life can be prolonged by lowering the ambient temperature.

Capacitor failure is usually followed by damage to the unit and an input cable fuse failure, or a fault trip. Contact ABB if capacitor failure is suspected. Replacements are available from ABB. Do not use other than ABB specified spare parts.

Reforming the capacitors

Reform the capacitors if the drive has not been powered for a year or more. See page *34* for information on finding out the manufacturing date. For information on reforming the capacitors, see *Converter module capacitor reforming instructions* (3BFE64059629 [English]).

Control panel

Cleaning the control panel

Use a soft damp cloth to clean the control panel. Avoid harsh cleaners which could scratch the display window.

Replacing the battery in the assistant control panel

A battery is only used in assistant control panels that have the clock function. The battery keeps the clock operating during power interruptions.

The expected life for the battery is greater than ten years.

Note: The battery is NOT required for any control panel or drive functions, except the clock.

1. To remove the control panel from the drive, press the retaining clip at the top and pull it forward from the top edge.
2. Disconnect the panel cable.
3. To remove the battery, use a coin to rotate the battery cover on the back of the control panel.
4. Replace the battery with type CR2032. Dispose the old battery according to local disposal rules or applicable laws.
5. To reinstall the control panel, press the retaining clip at the top (5a) and push the control panel in at the top edge (5b)

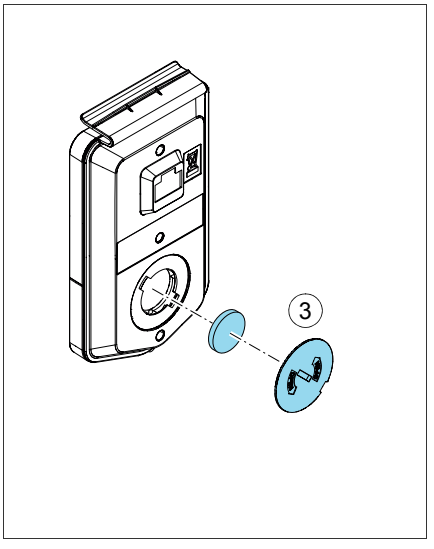

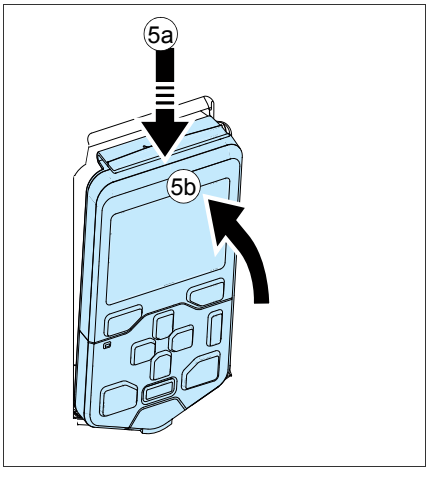

12

Technical data

Contents of this chapter

This chapter contains the technical specifications of the drive, for example, the ratings, sizes and technical requirements, provisions for fulfilling the requirements for CE and other markings.

Ratings

The nominal ratings for the drives with 50 Hz and 60 Hz supply are given below. The symbols are described below the table.

IEC RATINGS										
Drive type ACS580-07-	**Frame size**	**Input rating**	**Output ratings**							
			No-overload use				**Light-overload use**		**Heavy-duty use**	
		I_1	I_{max}	I_2	P_N	S_N	I_{Ld}	P_{Ld}	I_{Hd}	P_{Hd}
		A	**A**	**A**	**kW**	**kVA**	**A**	**kW**	**A**	**kW**
U_N = 400 V										
0495A-4	R10	495	560	495	250	343	485	250	361	200
0575A-4	R10	575	730	575	315	398	575	315	429	250
0640A-4	R10	640	730	640	355	443	634	355	477	250
0715A-4	R11	715	1020	715	400	495	715	400	566	315
0810A-4	R11	810	1020	810	450	561	810	450	625	355
0870A-4	R11	870	1100	870	500	603	865	500	725***	400

3AXD10000451709

NEMA RATINGS								
Drive type ACS580-07-	Frame size	Input rating	Max. current	App. power	Output ratings			
					Light-duty use		Heavy-duty use	
		I_1	I_{max}	S_N	I_{Ld}	P_{Ld}	I_{Hd}	P_{Hd}
		A	A	kVA	A	hp	A	hp
U_N = 480 V								
0495A-4	R10	483	560	343	483	400	361	300
0575A-4	R10	573	730	398	573	450	414	350
0640A-4	R10	623	730	443	623	500	477	400
0715A-4	R11	705	850	495	705	600	566	450
0810A-4	R11	807	1020	561	807	700	625	500
0870A-4	R11	807	1020	603	807	700	625	500

3AXD00000586715

Definitions

U_N	Nominal voltage of the drive. For the input voltage range, see section *Electrical power network specification* on page *125*.
I_1	Nominal rms input current
I_2	Nominal output current (available continuously with no over-loading)
S	Apparent power (no overload)
P_N	Typical motor power in no-overload use
I_{Ld}	Continuous rms output current allowing 10% overload for 1 minute every 5 minutes.
P_{Ld}	Typical motor power in light-overload use
I_{max}	Maximum output current. Available for two seconds at start, then as long as allowed by drive temperature.
I_{Hd}	Continuous rms output current allowing 50% overload for 1 minute every 10 minutes. *** Continuous rms output current allowing 40% overload for 1 minute every 10 minutes.
P_{Hd}	Typical motor power in heavy-duty use

Note 1: The ratings apply at an ambient temperature of 40 °C (104 °F).

Note 2: To achieve the rated motor power given in the table, the rated current of the drive must be higher than or equal to the rated motor current.

The DriveSize dimensioning tool available from ABB is recommended for selecting the drive, motor and gear combination.

Output derating

Ambient temperature derating

In the temperature range +40…50 °C (+104…122 °F), the rated output current is derated by 2% for every added 1 °C (3.6 °F). The output current can be calculated by multiplying the current given in the rating table by the derating factor (k):

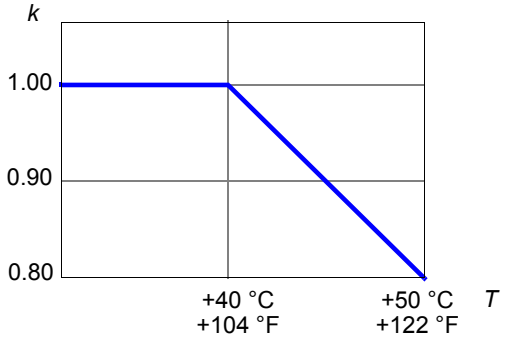

Altitude derating

At altitudes from 1000 to 2000 m (3300 to 6561 ft) above sea level, the derating is 1% for every 100 m (328 ft). If ambient temperature is below +40 °C (+104 .°F), the derating can be reduced by 1.5% for every 1 °C reduction in temperature. For a more accurate derating, use the DriveSize PC tool. A few altitude derating curves are shown below.

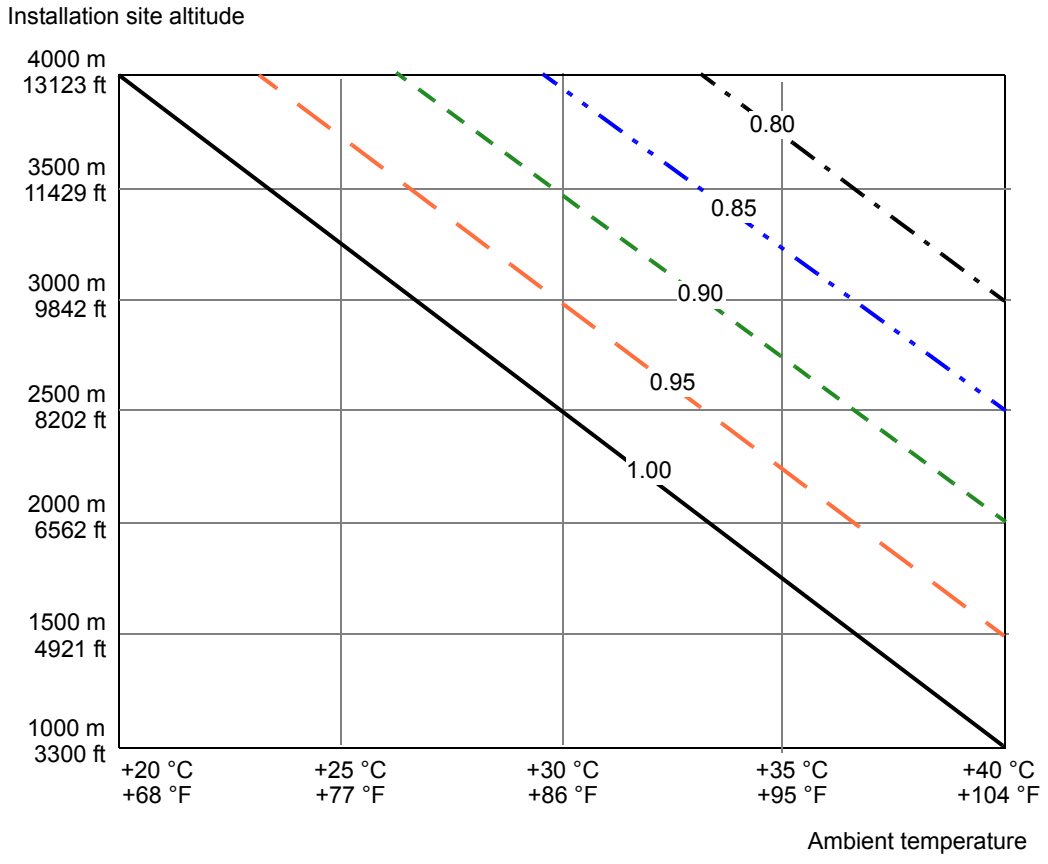

———	Derating factor 1.00
— — —	Derating factor 0.95
- - - - -	Derating factor 0.9
-·-·-·-	Derating factor 0.85
- · — · — · -	Derating factor 0.80

Deratings for special settings in the drive control program

If you change the minimum switching frequency with parameter **97.02 Minimum switching frequency**, calculate the derated output current by multiplying the current given in the rating table by the derating factor given in this table.

Frame size	Derating factor (k) for the minimum switching frequencies			
	1 kHz	2 kHz	4kHz	8 kHz
R10	1	0.92	0.78	0.58
R11	1	0.92	0.78	0.58

Note: Changing the value of parameter **97.01 Switching frequency reference** does not require derating.

Fuses (IEC)

The drive is equipped with aR fuses listed below.

Drive type ACS580-07-	Input current (A)	Ultrarapid (aR) fuses (one fuse per phase)						
		A	A^2s	V	Manufacturer	Type	Type with option +F289	Size
U_N = 400 V								
0495A-4	495	800	465000	690	Bussmann	170M6412	170M6412	3
0575A-4	575	900	670000	690	Bussmann	170M6413	170M6413	3
0640A-4	640	1000	945000	690	Bussmann	170M6414	170M6414	3
0715A-4	715	1250	1950000	690	Bussmann	170M6416	170M6416	3
0810A-4	810	1250	1950000	690	Bussmann	170M6416	170M6416	3
0870A-4	870	1400	2450000	690	Bussmann	170M6417	170M6417	3

Note 1: See also *Implementing thermal overload and short-circuit protection* on page *58*.

Note 2: Fuses with higher current rating than the recommended ones must not be used. Fuses with lower current rating can be used.

Note 3: Fuses from other manufacturers can be used if they meet the ratings and the melting curve of the fuse does not exceed the melting curve of the fuse mentioned in the table.

Dimensions and weights

Frame size	Height				Width		Depth		Weight	
	IP42		IP54							
	mm	in.	mm	in.	mm	in.	mm	in.	kg	lb
R10	2145	84.45	2315	91.14	830	32.68	698	27.48	530	1170
R11	2145	84.45	2315	91.14	830	32.68	698	27.48	580	1280

Free space requirements

Front		Side		Above*	
mm	in.	mm	in.	mm	in.
150	5.91	-	-	400	15.75

* measured from the base plate of the cabinet top. **Note**: 320 mm (12.28 in.) is required for fan replacement of IP54 cabinets.

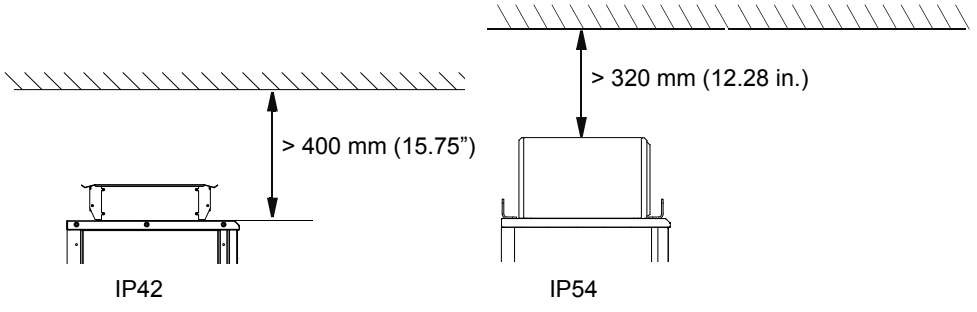

Door opening:

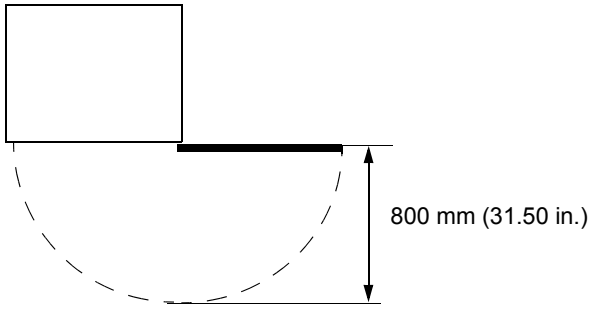

Losses, cooling data and noise

Drive type	Frame	Air flow		Heat dissipation	Noise
		m^3/h	ft^3/min	W	dB(A)
U_N = 400 V					
ACS580-07-0495A-4	R10	2950	1837	6102	72
ACS580-07-0575A-4	R10	2950	1837	6909	72
ACS580-07-0640A-4	R10	2950	1837	8622	72
ACS580-07-0715A-4	R11	2950	1837	9264	72
ACS580-07-0810A-4	R11	2950	1837	10362	72
ACS580-07-0870A-4	R11	3170	1978	11078	71

Terminal and lead-through data for the power cables

IEC

Frame size	Number of holes in the lead-through plate for the power cables. Hole diameter 60 mm.	Terminals L1, L2, L3, U2, V2, W2			Grounding terminals	
		Max. phase conductor size mm^2	Bolt size	Tightening torque	Bolt size	Tightening torque N·m
R10	12	3×240 or 4×185	M12	50...75 N·m	M10	30...44 N·m
R11	12	4×240 or 5×185	M12	50...75 N·m	M10	30...44 N·m

Input and motor cable terminal dimensions of frame R10

Bottom entry and exit:

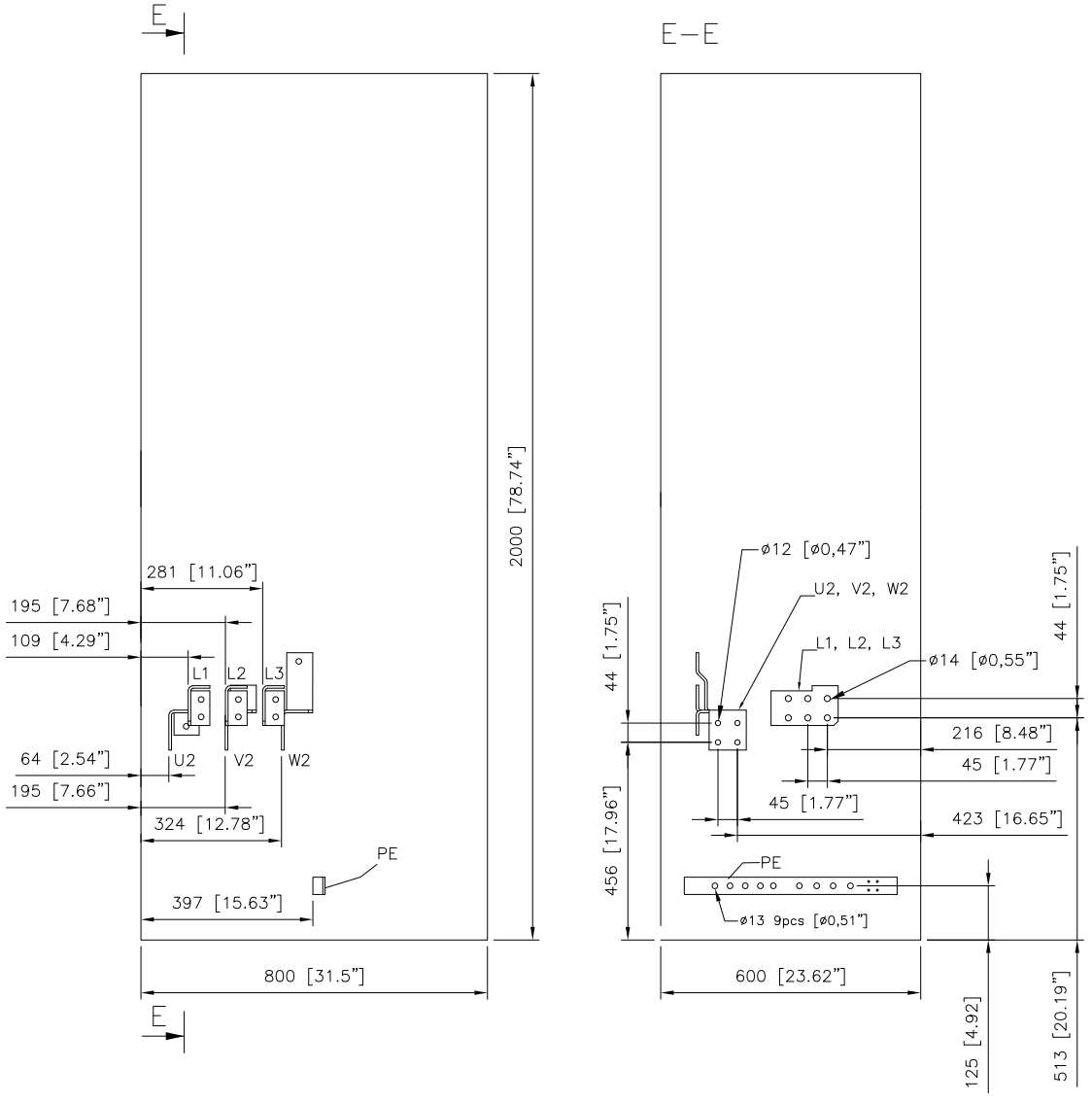

Input and motor cable terminal dimensions of frame R11

Bottom entry and exit:

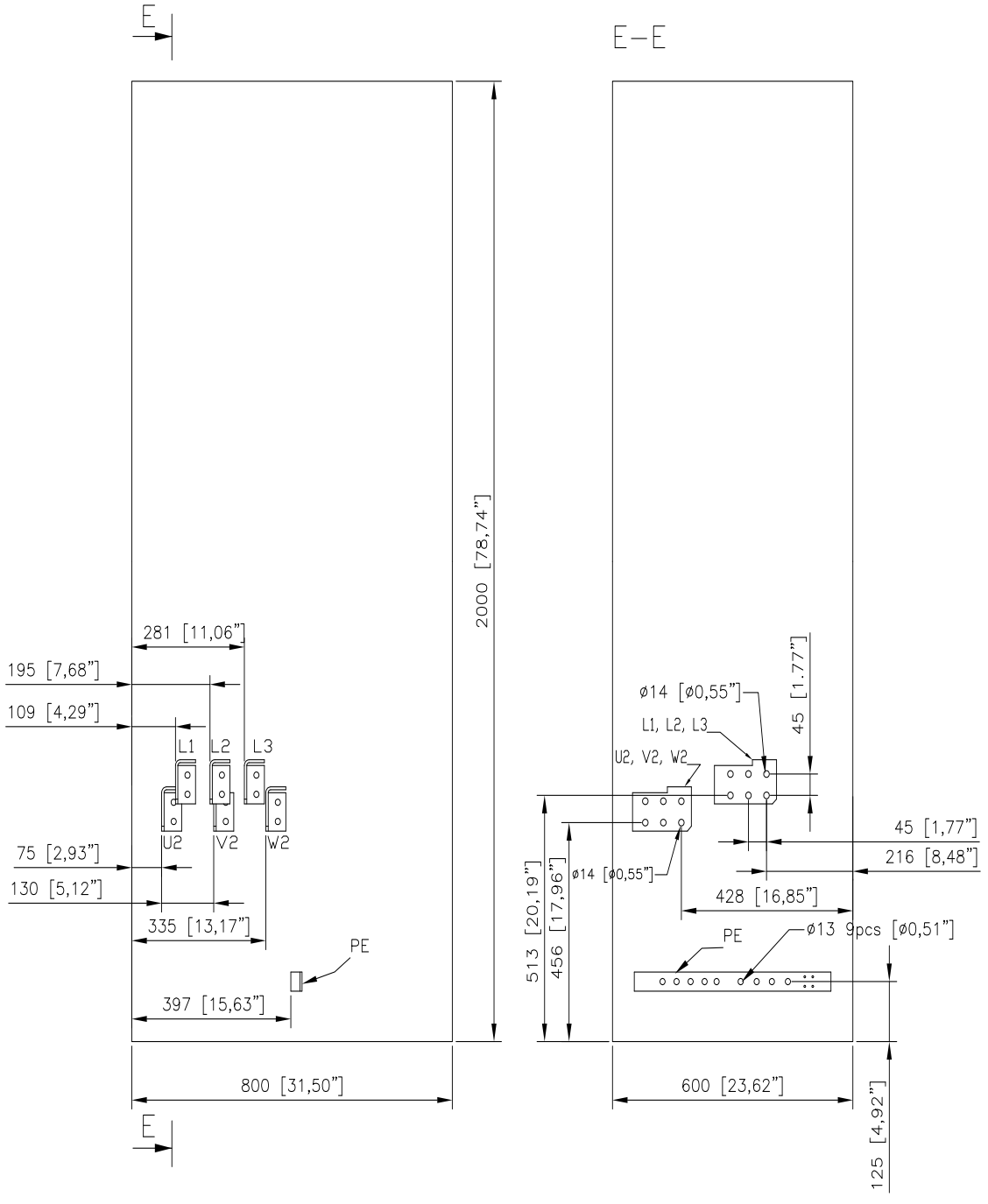

Input and motor cable terminal dimensions of frames R10 and R11

Top entry and exit (option +H351+H353):

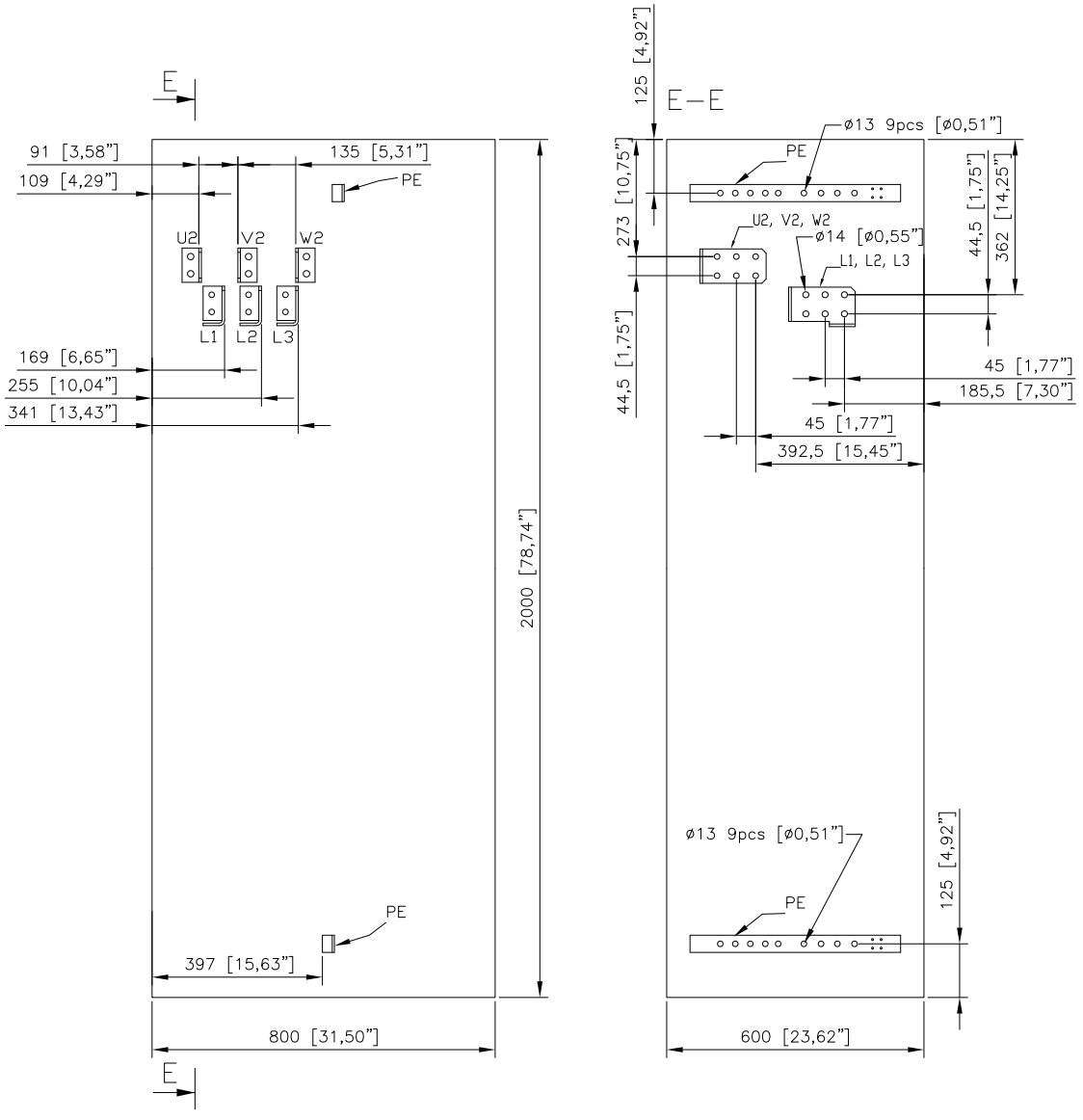

Terminal data for the control cables

See chapter *Control unit* on page *79*.

Electrical power network specification

Voltage (U_1)	ACS580-07-xxxxx-4 drives: 380…480 VAC 3-phase ±10%. This is indicated in the type designation label as typical input voltage levels 3 ~ 400/480 V AC.
Network type	TN (grounded) and IT (ungrounded) systems
Short-circuit withstand strength (IEC 61439-1)	Maximum allowable prospective short-circuit current is 65 kA when the input cable is protected with gG type fuses (IEC 60269) having maximum operating time of 0.1 seconds and maximum current rating 1250 A.
Frequency (f_1)	50/60 Hz. Variation ±5% of nominal frequency.
Imbalance	Max. ± 3% of nominal phase to phase input voltage
Fundamental power factor (cos phi$_1$)	0.98 (at nominal load)

Motor connection data

Motor types	Asynchronous AC induction motors, permanent magnet synchronous motors
Voltage (U_2)	0 to U_1, 3-phase symmetrical. This is indicated in the type designation label as typical output voltage level 3 ~ 0...U_1. U_{max} at the field weakening point.
Frequency (f_2)	0…500 Hz For drives with du/dt filter: 200 Hz
Current	See section *Ratings.*
Switching frequency	3 kHz (typically)
Maximum recommended motor cable length	300 m (984 ft). **Note:** With motor cables longer than 100 m (328 ft), the EMC Directive requirements may not be fulfilled.

Control unit connection data

See chapter *Control unit* on page *79*.

Efficiency

Approximately 98% at nominal power level

Protection classes

Degrees of protection (IEC/EN 60529)	IP42, IP54
Overvoltage category (IEC 60664-1)	III
Protective class (IEC/EN 61800-5-1)	I

Ambient conditions

Environmental limits for the drive are given below. The drive is to be used in a heated, indoor, controlled environment.

	Operation installed for stationary use	**Storage** in the protective package	**Transportation** in the protective package
Installation site altitude	0 to 2000 m (6561 ft) above sea level. For altitudes over 2000 m, contact ABB. Output derated above 1000 m (3281 ft). See section *Output derating*	-	-
Air temperature	-0 to +50 °C (32 to 122 °F). No condensation allowed. Output derated in the range +40 … +50 °C (+104 … +122 °F). See section *Output derating*.	-40 to +70 °C (-40 to +158 °F)	-40 to +70 °C (-40 to +158 °F)
Relative humidity	5 to 95%	Max. 95%	Max. 95%
	No condensation allowed. Maximum allowed relative humidity is 60% in the presence of corrosive gases.		
Contamination	IEC/EN 60721-3-3:2002: Classification of environmental conditions-Part 3-3: Classification of groups of environmental parameters and their severities - Stationary use of weather protected locations	IEC 60721-3-1:1997	IEC 60721-3-2:1997
Chemical gases	Class 3C2	Class 1C2	Class 2C2
Solid particles	Class 3S2. No conductive dust allowed.	Class 1S3. (packing must support this, otherwise 1S2)	Class 2S2
Atmospheric pressure	70 to 106 kPa 0.7 to 1.05 atmospheres	70 to 106 kPa 0.7 to 1.05 atmospheres	60 to 106 kPa 0.6 to 1.05 atmospheres
Vibration IEC 61800-5-1 IEC 60068-2-6:2007, EN 60068-2-6:2008 Environmental testing Part 2: Tests –Test Fc: Vibration (sinusoidal)	IEC/EN 60721-3-3:2002 10…57 Hz: max. 0.075 mm amplitude 57…150 Hz: 1 g	IEC/EN 60721-3-1:1997 10…57 Hz: max. 0.075 mm amplitude 57…150 Hz: 1 g	IEC/EN 60721-3-2:1997 2…9 Hz: max. 3.5 mm amplitude 9…20 Hz: 10 m/s2 (32.8 ft/s2)
Shock IEC 60068-2-27:2008, EN 60068-2-27:2009 Environmental testing - Part 2-27: Tests - Test Ea and guidance: Shock	Not allowed	With packing max. 100 m/s^2 (330 ft./s^2), 11 ms	With packing max. 100 m/s^2 (330 ft./s^2), 11 ms

Auxiliary circuit power consumption

Cabinet heater (option +G300)	100 W

Materials

Cabinet	Hot-dip zinc coated 1.5 mm thick steel sheet (thickness of coating approximately 20 micrometers). Polyester thermosetting powder coating (thickness approximately 80 micrometers) on visible surfaces, color RAL 7035 and RAL 9017. PC/ABS 3 mm, color NCS 1502-Y (RAL 9002 / PMS 1C Cool Grey).
Busbars	Tin-plated copper
Air filters of IP54 drives	Inlet (door): airComp 300-50 288 mm x 521 mm (ABB code: 64640194) 688 mm x 521 mm (ABB code 64748017) Outlet (roof): airTex G150 2 pcs: 398 mm x 312 mm (ABB code: 64722166)
Fire safety of materials (IEC 60332-1)	Insulating materials and non-metallic items mostly self-extinctive
Package	Standard package: • timber, polyethylene sheet (thickness 0.2 mm), stretch film (thickness 0.023 mm), PP tape, PET strap, sheet metal (steel) • for land and air transport when planned storage time is less than 2 months or when storage can be arranged in clean and dry conditions less than 6 months • can be used when products will not be exposed to corrosive atmosphere during transport or storage Container package: • timber, VCI sheet film (PE, thickness 0.15 mm), VCI stretch film (PE, thickness 0.04 mm), VCI emitter bags, PP tape, PET strap, sheet metal (steel) • for sea transport in containers • recommended for land and air transport when storage time prior to installation exceeds 6 months or storage is arranged in partially weather-protected conditions Seaworthy package: • timber, plywood, VCI sheet film (PE, thickness 0.15 mm), VCI stretch film (PE, thickness 0.04 mm), VCI emitter bags, PP tape, PET strap, sheet metal (steel) • for sea transport with or without containerization • for long storage periods in environments where roofed and humidity-controlled storage cannot be arranged Cabinets are fastened to the pallet with screws and braced from the top end to the package walls to prevents swaying inside the package. Package elements are attached together with screws. For handling the packages, see section *Moving and unpacking the drive* on page *41*.
Disposal	The main parts of the drive can be recycled to preserve natural resources and energy. Product parts and materials should be dismantled and separated. Generally all metals, such as steel, aluminum, copper and its alloys, and precious metals can be recycled as material. Plastics, rubber, cardboard and other packaging material can be used in energy recovery. Printed circuit boards and DC capacitors (C1-1 to C1-x) need selective treatment according to IEC 62635 guidelines. To aid recycling, plastic parts are marked with an approppriate identification code. Contact your local ABB distributor for further information on environmental aspects and recycling instructions for professional recyclers. End of life treatment must follow international and local regulations.

Applicable standards

	The drive complies with the standards below. The compliance with the European Low Voltage Directive is verified according to standard EN 61800-5-1.
European electrical safety requirements product standards	
EN 61800-5-1:2007	*Adjustable speed electrical power drive systems. Part 5-1: Safety requirements – electrical, thermal and energy*
IEC 60146-1-1:2009 **EN 60146-1-1:2010**	*Semiconductor converters – General requirements and line commutated converters – Part 1-1: Specification of basic requirements*
IEC 60204-1:2005 +A1:2008	*Safety of machinery. Electrical equipment of machines. Part 1: General requirements.*
EN 60204-1:2006 +AC:2010	Provisions for compliance: The final assembler of the machine is responsible for installing emergency-stop device.
IEC 60529:1989 **EN 60529:1991**	*Degrees of protection provided by enclosures (IP code)*
IEC/EN 60664-1:2007	*Insulation coordination for equipment within low-voltage systems. Part 1: Principles, requirements and tests*
IEC/EN 61439-1:2009	*Low-voltage switchgear and control gear assemblies -- Part 1: General rules*
EMC performance	
EN 61800-3:2004	*Adjustible speed electrical power drive systems. Part 3: EMC requirements and specific test methods*

CE marking

A CE mark is attached to the drive to verify that the drive complies with the provisions of the European Low Voltage and EMC Directives. The CE marking also verifies that the drive, in regard to its safety functions (such as Safe torque off), conforms with the Machinery Directive as a safety component.

Compliance with the European Low Voltage Directive

The compliance with the European Low Voltage Directive has been verified according to standard EN 61800-5-1.

Compliance with the European EMC Directive

The EMC Directive defines the requirements for immunity and emissions of electrical equipment used within the European Union. The EMC product standard (EN 61800-3:2004) covers requirements stated for drives. See section *Compliance with the EN 61800-3:2004* below.

Compliance with the European Machinery Directive

The drive is an electronic product which is covered by the European Low Voltage Directive. However, the drive includes the Safe torque off function and can be equipped with other safety functions for machinery which, as safety components, are in the scope of the Machinery Directive. These functions of the drive comply with European harmonized standards such as EN 61800-5-2. The declaration of conformity is shown below.

Declaration of Conformity (Safe torque off)

See also chapter *Safe torque off function* on page *137* and section *Implementing the emergency stop function* on page *59*.

EU Declaration of Conformity

(According to Machinery Directive 2006/42/EC)

We

Manufacturer: ABB Oy, Drives
Address: Hiomotie 13, P.O Box 184, 00381 Helsinki, Finland
Phone: +358 10 22 11

declare under our sole responsibility that the following products

ACS580-07-0495A-4	**ACS580-07-0575A-4**
ACS580-07-0640A-4	**ACS580-07-0715A-4**
ACS580-07-0810A-4	**ACS580-07-0870A-4**

identified with serial numbers beginning with **1**, **8** or **A**

with regard to the safety functions

Safe torque off

Emergency stop (option code +Q951)

are in conformity with all the relevant safety component requirements of EC Machinery Directive 2006/42/EC, when the listed safety functions are used for safety component functionality.

The following harmonized standards below were used:

EN 61800-5-2: 2007	*Adjustable speed electrical power drive systems – Part 5-2: Safety requirements - Functional*
EN 62061:2005 + AC:2010 + A1:2013 + A2:2015	*Safety of machinery – Functional safety of safety-related electrical, electronic and programmable electronic control systems*
EN ISO 13849-1: 2008 + AC: 2009	*Safety of machinery – Safety-related parts of control systems. Part 1: General requirements*
EN ISO 13849-2: 2012	*Safety of machinery – Safety-related parts of the control systems. Part 2: Validation*
EN 60204-1: 2006 + A1:2009 + AC: 2010	*Safety of machinery – Electrical equipment of machines – Part 1: General requirements*

Other used standards:

IEC 61508 ed. 2: 2010	Functional safety of electrical / electronic / programmable electronic safety-related systems

The products referred in this Declaration of Conformity fulfil the relevant provisions of the Low Voltage Directive 2006/95/EC and EMC Directive 2004/108/EC. Declaration of conformity according to these directives is available from the manufacturer.

3AXD10000491352 Page: 1/2

EU Declaration of Conformity

(According to Machinery Directive 2006/42/EC)

Person authorized to compile the technical file:

Name: Vesa Tiihonen
Address: P.O. Box 184, 00381 Helsinki, Finland

Helsinki, 15 Mar 2016

Peter Lindgren

Vice President
ABB Oy

3AXD10000491352

Page: 2/2

Compliance with the EN 61800-3:2004

Definitions

EMC stands for **E**lectro**m**agnetic **C**ompatibility. It is the ability of electrical/electronic equipment to operate without problems within an electromagnetic environment. Likewise, the equipment must not disturb or interfere with any other product or system within its locality.

First environment includes establishments connected to a low-voltage network which supplies buildings used for domestic purposes.

Second environment includes establishments connected to a network not supplying domestic premises.

Drive of category C3: drive of rated voltage less than 1000 V and intended for use in the second environment and not intended for use in the first environment.

Drive of category C4: drive of rated voltage equal to or above 1000 V, or rated current equal to or above 400 A, or intended for use in complex systems in the second environment.

Category C3

The drive complies with the standard with the following provisions:

6. The motor and control cables are selected as specified in the hardware manual.
7. The drive is installed according to the instructions given in the hardware manual.
8. Maximum motor cable length is 100 meters.

WARNING! A drive of category C3 is not intended to be used on a low-voltage public network which supplies domestic premises. Radio frequency interference is expected if the drive is used on such a network.

Category C4

If the provisions under *Category C3* cannot be met, the requirements of the standard can be met as follows:

1. It is ensured that no excessive emission is propagated to neighbouring low-voltage networks. In some cases, the natural suppression in transformers and cables is

sufficient. If in doubt, the supply transformer with static screening between the primary and secondary windings can be used.

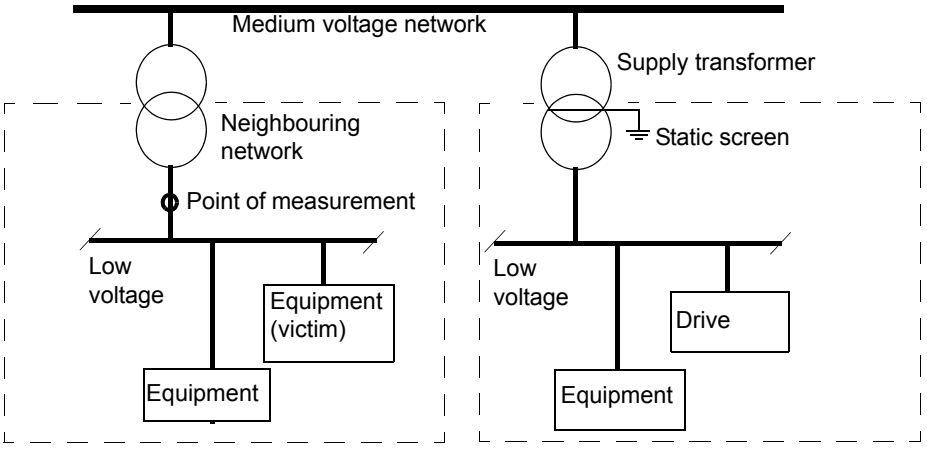

2. An EMC plan for preventing disturbances is drawn up for the installation. A template is available from the local ABB representative.
3. The motor and control cables are selected as specified in the hardware manual.
4. The drive is installed according to the instructions given in the hardware manual.

WARNING! A drive of category C4 is not intended to be used on a low-voltage public network which supplies domestic premises. Radio frequency interference is expected if the drive is used on such a network.

Cyber security disclaimer

This product is designed to be connected to and to communicate information and data via a network interface. It is Customer's sole responsibility to provide and continuously ensure a secure connection between the product and Customer network or any other network (as the case may be). Customer shall establish and maintain any appropriate measures (such as but not limited to the installation of firewalls, application of authentication measures, encryption of data, installation of anti-virus programs, etc) to protect the product, the network, its system and the interface against any kind of security breaches, unauthorized access, interference, intrusion, leakage and/or theft of data or information. ABB and its affiliates are not liable for damages and/or losses related to such security breaches, any unauthorized access, interference, intrusion, leakage and/or theft of data or information.

Disclaimer

The manufacturer shall have no obligation hereunder with respect to any product which (i) has been improperly repaired or altered; (ii) has been subjected to misuse, negligence or accident; (iii) has been used in a manner contrary to the Manufacturer's instructions; or (iv) has failed as a result of ordinary wear and tear..

13

Dimension drawings

Example dimension drawings are shown below.

Frames R10 and R11 (IP42)

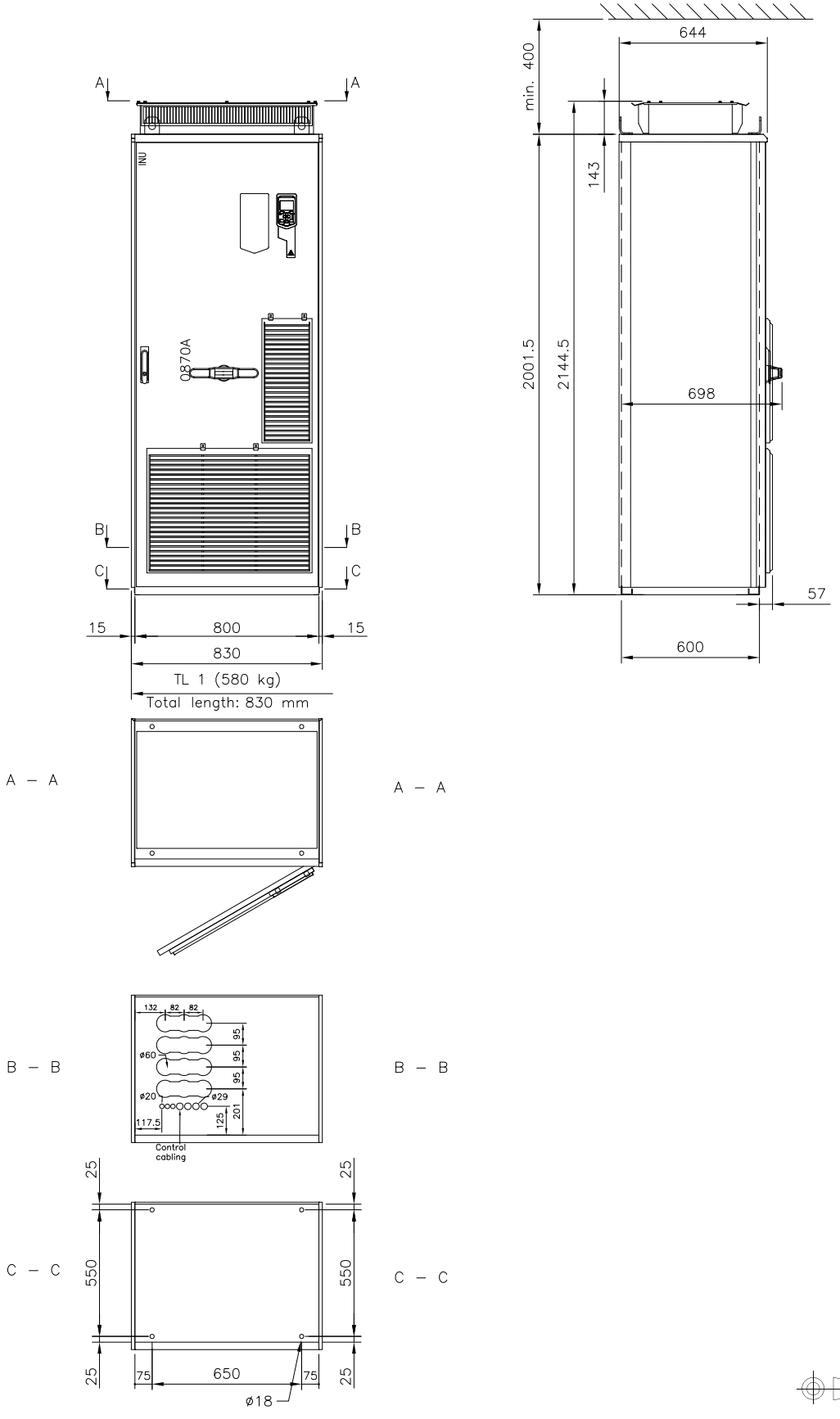

Frames R10 and R11 (IP54 – option +B055)

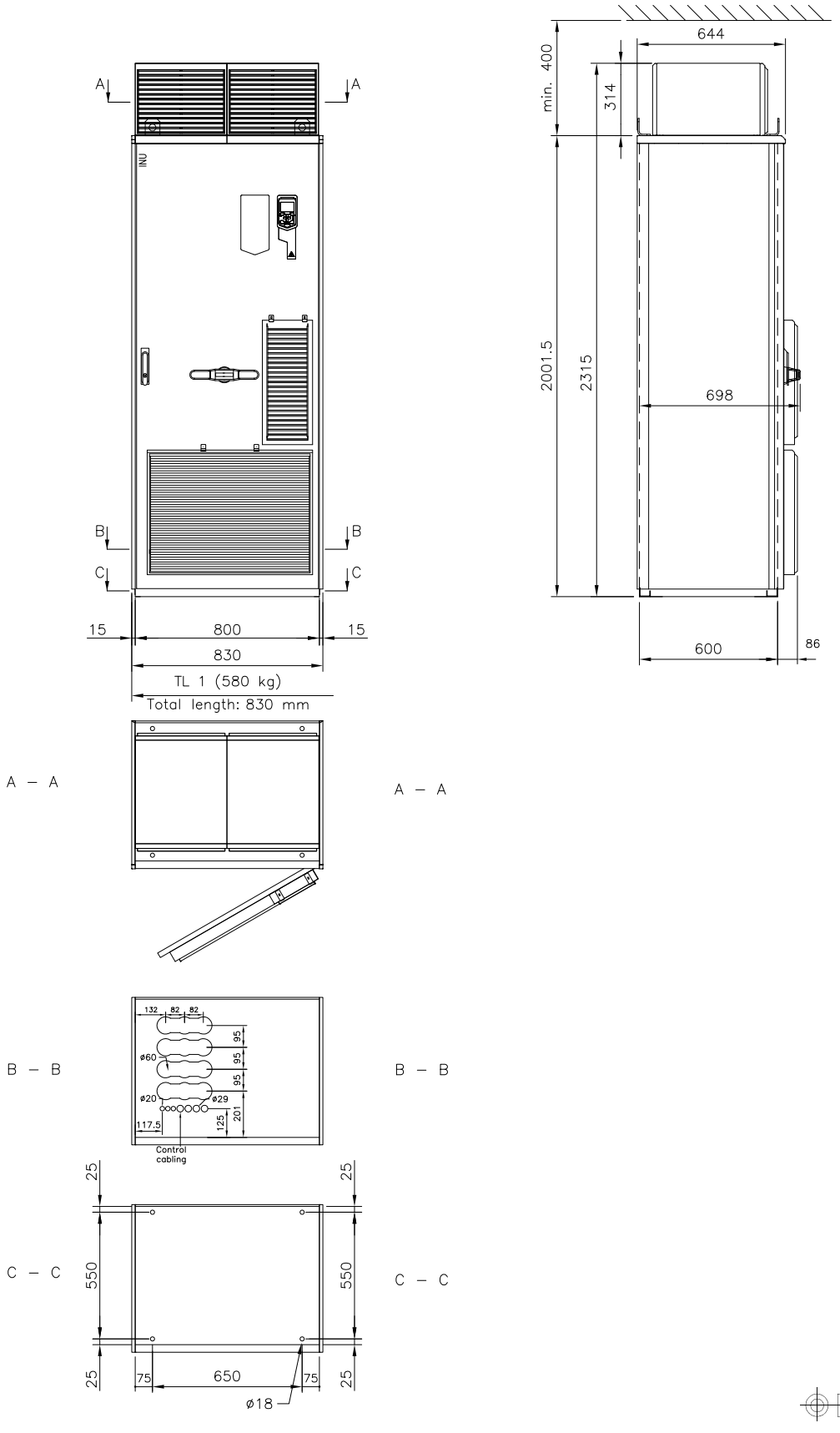

14

Safe torque off function

Contents of this chapter

This chapter describes the Safe torque off function of the drive and gives instructions for its use.

Description

The Safe torque off function can be used, for example, to construct safety or supervision circuits that stop the drive in case of danger (such as an emergency stop circuit). Another possible application is a service switch that enables short-time maintenance operations like cleaning or work on non-electrical parts of the machinery without switching off the power supply to the drive.

When activated, the Safe torque off function disables the control voltage of the power semiconductors of the drive output stage (A, see diagram below), thus preventing the drive from generating the torque required to rotate the motor. If the motor is running when Safe torque off is activated, it coasts to a stop.

The Safe torque off function has a redundant architecture, that is, both channels must be used in the safety function implementation. The safety data given in this manual is calculated for redundant use, and does not apply if both channels are not used.

The Safe torque off function of the drive complies with these standards:

Standard	Name
EN 60204-1:2006 + AC:2010	*Safety of machinery – Electrical equipment of machines – Part 1: General requirements*
IEC 61326-3-1:2008	*Electrical equipment for measurement, control and laboratory use – EMC requirements – Part 3-1: Immunity requirements for safety-related systems and for equipment intended to perform safety-related functions (functional safety) – General industrial applications*

Standard	Name
IEC 61508-1:2010	*Functional safety of electrical/electronic/programmable electronic safety-related systems – Part 1: General requirements*
IEC 61508-2:2010	*Functional safety of electrical/electronic/programmable electronic safety-related systems – Part 2: Requirements for electrical/electronic/programmable electronic safety-related systems*
IEC 61511:2003	*Functional safety – Safety instrumented systems for the process industry sector*
IEC/EN 61800-5-2:2007	*Adjustable speed electrical power drive systems – Part 5-2: Safety requirements – Functional*
EN 62061:2005 + A1:2013 IEC 62061:2005 + A1:2012	*Safety of machinery – Functional safety of safety-related electrical, electronic and programmable electronic control systems*
EN ISO 13849-1:2008 + AC:2009	*Safety of machinery – Safety-related parts of control systems – Part 1: General principles for design*
EN ISO 13849-2:2012	*Safety of machinery – Safety-related parts of control systems – Part 2: Validation*

The function also corresponds to prevention of unexpected start-up as specified by EN 1037:1995 + A1:2008 and uncontrolled stop (stop category 0) as specified in EN 60204-1:2006 + AC:2010.

Compliance with the European Machinery Directive

See section *Compliance with the European Machinery Directive* on page *128*.

Wiring

The following diagrams show examples of Safe torque off wiring for

- a single drive (page *139*)
- multiple drives (page *141*)
- multiple drives when an external 24 V DC power supply is used (page *142*).

For drives with option +L537+Q971, see *CPTC-02 ATEX-certified thermistor protection module, Ex II (2) GD (+L537+Q971) user's manual* (3AXD50000030058 [English]).

For information on the specifications of the STO input, see section *Technical data* on page *87*.

Activation switch

In the wiring diagrams below, the activation switch has the designation (K). This represents a component such as a manually operated switch, an emergency stop push button switch, or the contacts of a safety relay or safety PLC.

- If a manually operated activation switch is used, the switch must be of a type that can be locked out to the open position.
- The contacts of the switch or relay must open/close within 200 ms of each other.
- An CPTC-02 option module can be used. For more information, see.section *CPTC-02 ATEX-certified thermistor protection module, (external 24 V AC/DC and isolated PTC interface)* on page *168*.

Cable types and lengths

We recommend double-shielded twisted-pair cable.

Maximum cable lengths:

- 300 m (984 ft) between activation switch (K) and drive control unit
- 60 m (200 ft) between multiple drives
- 60 m (200 ft) between external power supply and first drive.

Note that the voltage at the INx terminals of each drive must be at least 13 V DC to be interpreted as “1”.

Grounding of protective shields

- Ground the shield in the cabling between the activation switch and the control unit at the control unit.
- Ground the shield in the cabling between two control units at one control unit only.

Single drive (internal power supply)

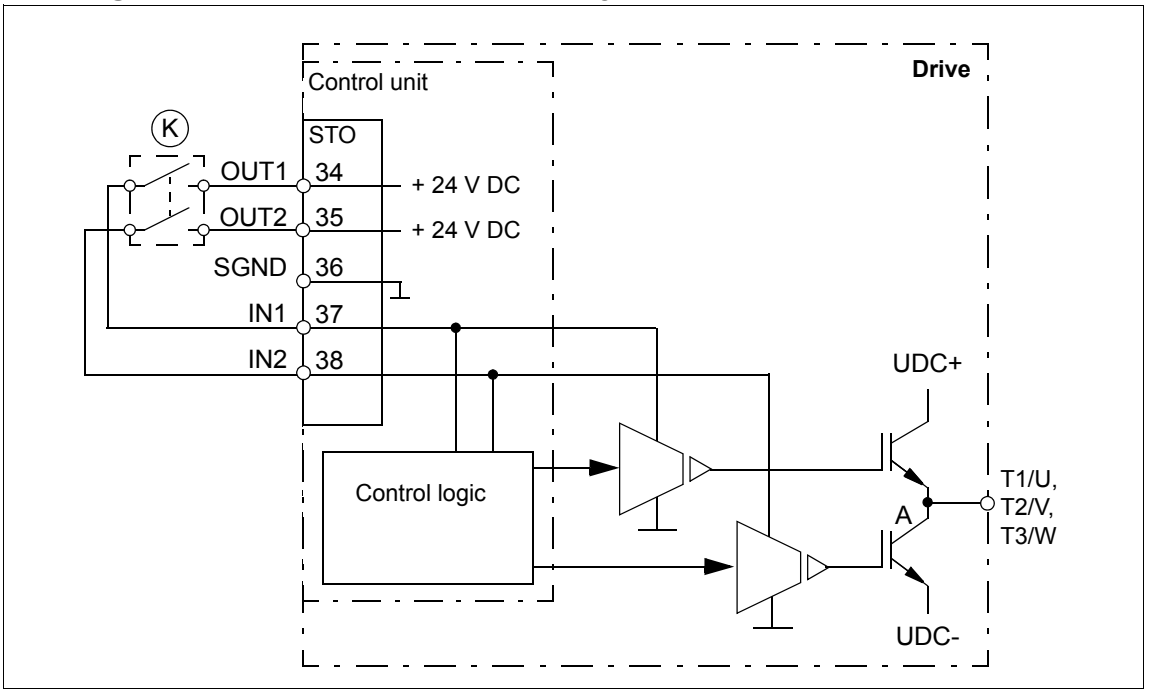

Single drive (external +24 V DC power supply)

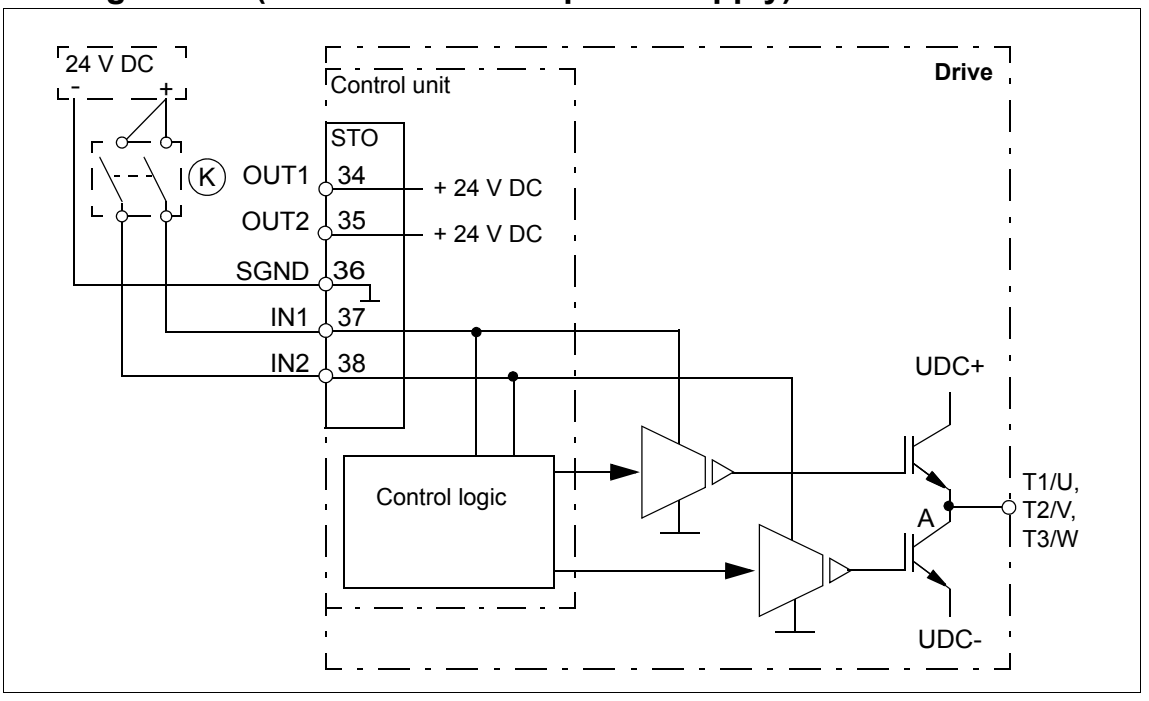

Multiple drives (internal power supply)

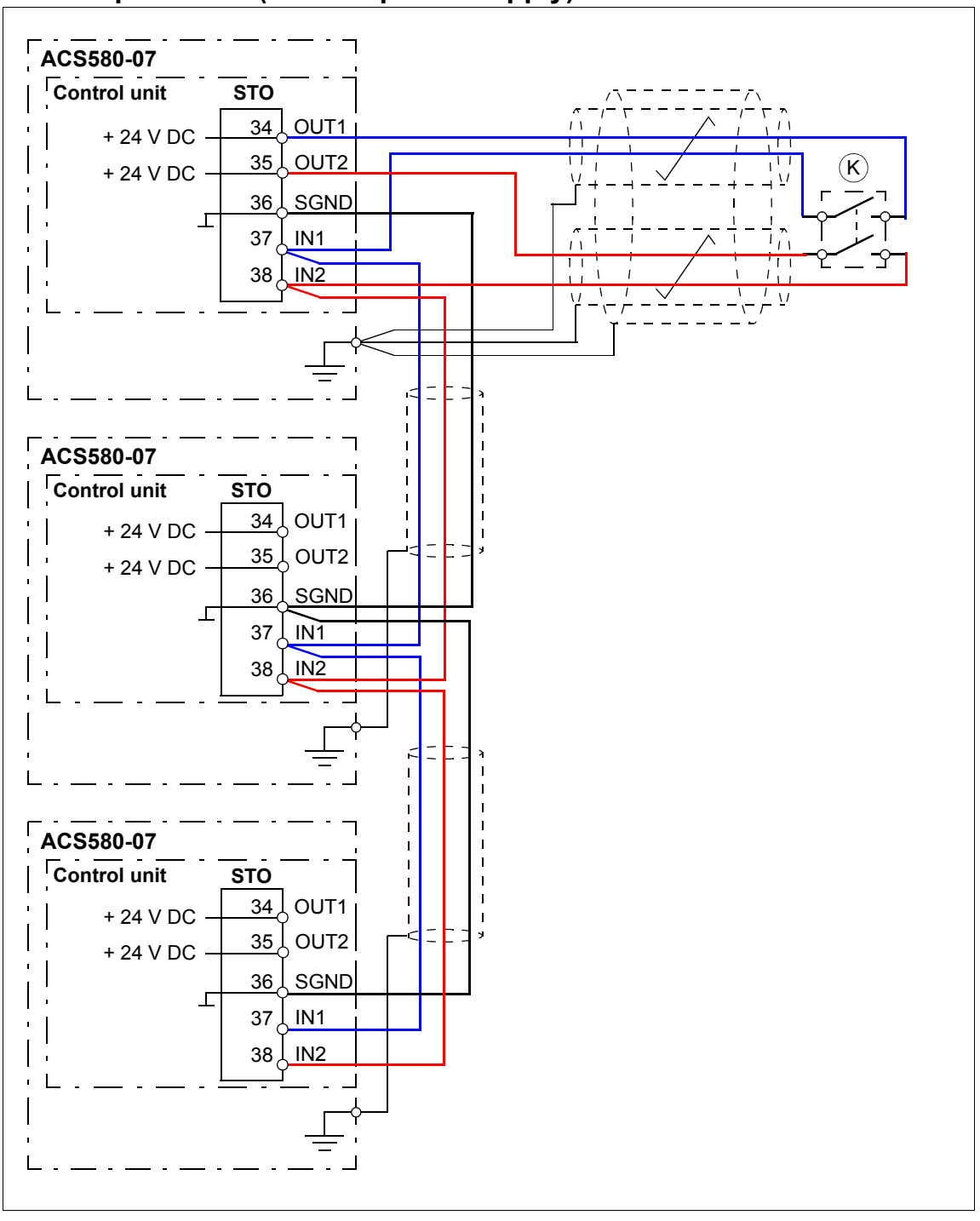

Multiple drives (external power supply)

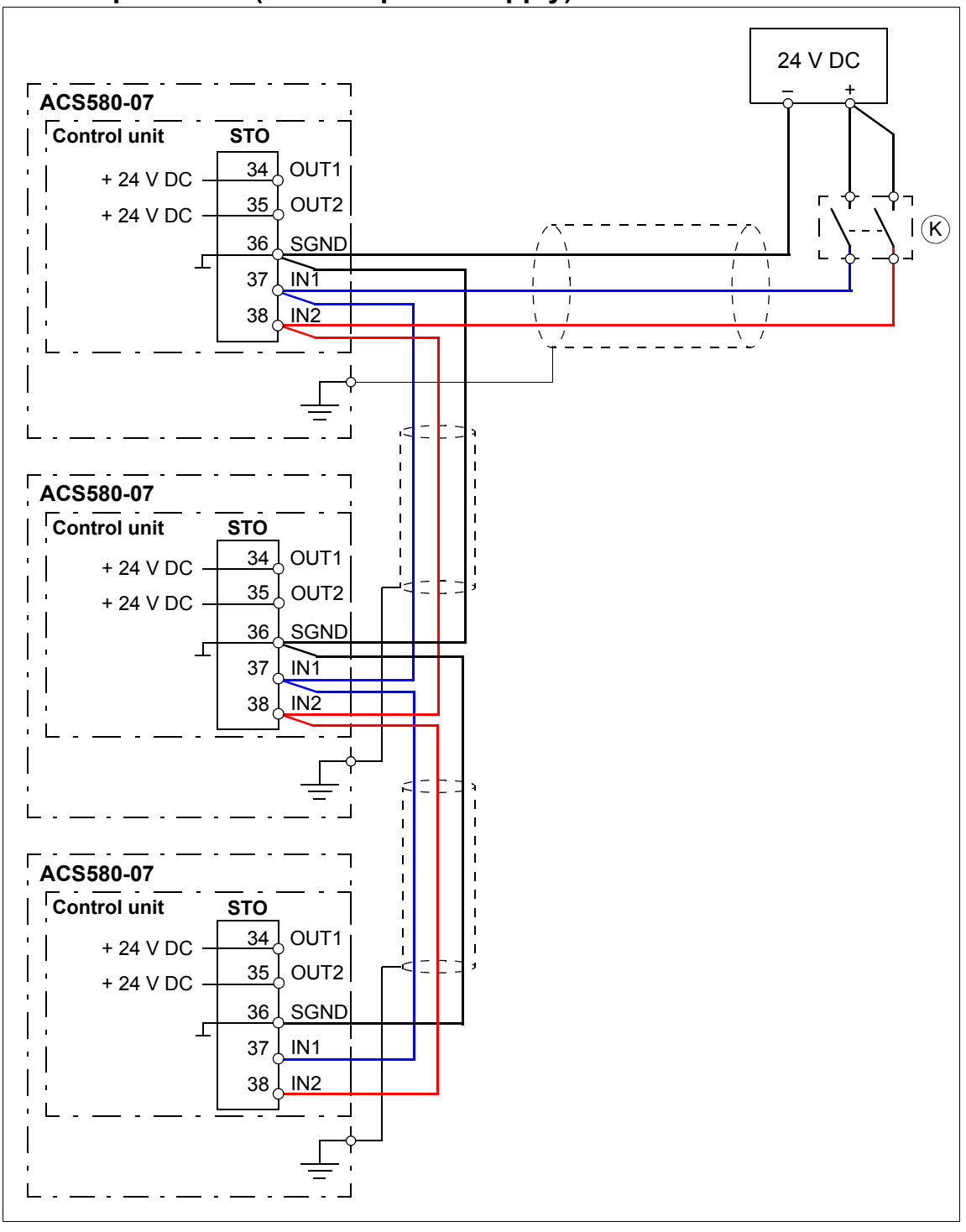

Operation principle

1. The Safe torque off activates (the activation switch is opened, or safety relay contacts open).
2. STO inputs on the drive control unit de-energize.
3. The control unit cuts off the control voltage from the drive IGBTs.
4. The control program generates an indication as defined by parameter 31.22 (refer to the firmware manual of the drive).
5. Motor coasts to stop (if running). The drive cannot restart while the activation switch or safety relay contacts are open. After the contacts close, a new start command is required to start the drive.

Start-up including acceptance test

To ensure safe operation of the Safe torque off function, validation is required. The final assembler of the machine must validate the function by performing an acceptance test.

The acceptance test must be performed:

- at initial start-up of the safety function
- after any changes related to the safety function (circuit boards, wiring, components, settings, etc.)
- after any maintenance work related to the safety function.

Competence

The acceptance test of the safety function must be carried out by a competent person with adequate expertise and knowledge of the safety function as well as functional safety, as required by IEC 61508-1 clause 6. The test procedures and report must be documented and signed by this person.

Acceptance test reports

Signed acceptance test reports must be stored in the logbook of the machine. The report shall include documentation of start-up activities and test results, references to failure reports and resolution of failures. Any new acceptance tests performed due to changes or maintenance shall be logged into the logbook.

Acceptance test procedure

After wiring the Safe torque off function, validate its operation as follows. If the drive is equipped with safety option +Q951, do the procedure shown in the documentation of the option. If the drive is equipped with option +L537+Q971, do the procedure shown in the CPTC-02 module documentation.

Action	☑
⚠ **WARNING!** Follow the *Safety instructions*, page *13*. Ignoring the instructions can cause physical injury or death, or damage to the equipment.	☐
Make sure that the drive can be run and stopped freely during start-up.	☐
Stop the drive (if running), switch the input power off and isolate the drive from the power line by a disconnector.	☐
Check the Safe torque off (STO) circuit connections against the wiring diagram.	☐

Action	☑
Close the disconnector and switch the power on.	☐
Test the operation of the STO function when the motor is stopped. • Give a stop command for the drive (if running) and wait until the motor shaft is at a standstill. Make sure that the drive operates as follows: • Open the STO circuit. The drive generates an indication if one is defined for ‘stopped’ state in parameter 31.22 (see the firmware manual). • Give a start command to verify that the STO function blocks the drive operations. The motor should not start. • Close the STO circuit. • Reset any active faults. Restart the drive and check that the motor runs normally.	☐
Test the operation of the STO function when the motor is running: • Start the drive and make sure the motor is running. • Open the STO circuit. The motor should stop. The drive generates an indication if one is defined for ‘running’ state in parameter 31.22 (see the firmware manual). • Reset any active faults and try to start the drive. • Make sure that the motor stays at standstill and the drive operates as described above in testing the operation when the motor is stopped. • Close the STO circuit. • Reset any active faults. Restart the drive and check that the motor runs normally.	☐
Document and sign the acceptance test report which verifies that the safety function is safe and accepted for operation.	☐

Use

1. Open the activation switch, or activate the safety functionality that is wired to the STO connection.
2. STO inputs on the drive control unit de-energize, and the drive control unit cuts off the control voltage from the inverter IGBTs.
3. The control program generates an indication as defined by parameter 31.22 (refer to the firmware manual of the drive).
4. Motor coasts to stop (if running). The drive will not restart while the activation switch or safety relay contacts are open.
5. Deactivate the STO by closing the activation switch, or reseting the safety functionality that is wired to the STO connection.
6. Reset any faults before restarting.

WARNING! The Safe torque off function does not disconnect the voltage of the main and auxiliary circuits from the drive. Therefore maintenance work on electrical parts of the drive or the motor can only be carried out after isolating the drive system from the main supply.

WARNING! (With permanent magnet or synchronous reluctance [SynRM] motors only) In case of a multiple IGBT power semiconductor failure, the drive system can produce an alignment torque which maximally rotates the motor shaft by 180/*p* (with permanent magnet motors) or 180/2*p* (with synchronous reluctance [SynRM] motors) degrees regardless of the activation of the Safe torque off function. *p* denotes the

number of pole pairs.

Notes:

- If a running drive is stopped by using the Safe torque off function, the drive will cut off the motor supply voltage and the motor will coast to a stop. If this causes danger or is not otherwise acceptable, stop the drive and machinery using the appropriate stop mode before activating the Safe torque off function.
- The Safe torque off function overrides all other functions of the drive.
- The Safe torque off function is ineffective against deliberate sabotage or misuse.
- The Safe torque off function has been designed to reduce the recognized hazardous conditions. In spite of this, it is not always possible to eliminate all potential hazards. The assembler of the machine must inform the final user about the residual risks.

Maintenance

the STO function shall be maintained by periodic proof testing. In high demand mode of operation, the maximum proof test interval is 20 years. In low demand mode of operation, the maximum proof test interval is 2 years. The test procedure is given in section *Acceptance test procedure* (page *143*).

Note: See also the Recommendation of Use CNB/M/11.050 (published by the European co-ordination of Notified Bodies) concerning dual-channel safety-related systems with electromechanical outputs:

- When the safety integrity requirement for the safety function is SIL 3 or PL e (cat. 3 or 4), the proof test for the function must be performed at least every month.
- When the safety integrity requirement for the safety function is SIL 2 (HFT = 1) or PL d (cat. 3), the proof test for the function must be performed at least every 12 months.

The STO function of the drive does not contain any electromechanical components.

In addition to proof testing, it is a good practice to check the operation of the function when other maintenance procedures are carried out on the machinery.

Include the Safe torque off operation test described above in the routine maintenance program of the machinery that the inverter runs.

If any wiring or component change is needed after start up, or the parameters are restored, follow the test given in section *Acceptance test procedure* page *143*.

Use only ABB approved spare parts.

Record all maintenance and proof test activities in the machine logbook.

Competence

The maintenance and proof test activities of the safety function must be carried out by a competent person with adequate expertise and knowledge of the safety function as well as functional safety, as required by IEC 61508-1 clause 6.

Fault tracing

The indications given during the normal operation of the Safe torque off function are selected by drive parameter 31.22.

The diagnostics of the Safe torque off function cross-compare the status of the two STO channels. In case the channels are not in the same state, a fault reaction function is

performed and the drive trips. An attempt to use the STO in a non-redundant manner, for example activating only one channel, will trigger the same reaction.

See the drive firmware manual for the indications generated by the drive, and for details on directing fault and warning indications to an output on the control unit for external diagnostics.

Any failures of the Safe torque off function must be reported to ABB.

Safety data (SIL, PL)

The safety data for the Safe torque off function is given below.

Frame	SIL/ SILCL	SC	PL	SFF (%)	PFH (T_1 = 20 a) (1/h)	PFD (T_1 = 2 a)	$MTTF_d$ (a)	DC* (%)	Cat.	HFT	CCF (%)	Lifetime (a)
U_1 = 380…480 V												
R10, R11	3	3	e	99.88	1.05E-9	1.61E-6	12779	≥ 90	3	1	80	20

3AXD10000410558 REV B

* according to Table E.1 in EN/ISO 13849-1

- This temperature profile is used in safety value calculations:
  - 670 on/off cycles per year with $\triangle T$ = 71.66 °C
  - 1340 on/off cycles per year with $\triangle T$ = 61.66 °C
  - 30 on/off cycles per year with $\triangle T$ = 10.0 °C
  - 32 °C board temperature at 2.0% of time
  - 60 °C board temperature at 1.5% of time
  - 85 °C board temperature at 2.3% of time.
- The safety data is calculated for redundant use, and does not apply if both channels are not used.
- The STO is a type A safety component as defined in IEC 61508-2.
- Relevant failure modes:
  - The STO trips spuriously (safe failure)
  - The STO does not activate when requested

  A fault exclusion on the failure mode “short circuit on printed circuit board” has been made (EN 13849-2, table D.5). The analysis is based on an assumption that one failure occurs at one time. No accumulated failures have been analyzed.
- STO reaction time (shortest detectable break): 1 ms
- STO response time: 2 ms (typical), 5 ms (maximum)
- Fault detection time: Channels in different states for longer than 200 ms
- Fault reaction time: Fault detection time + 10 ms
- STO fault indication (parameter 31.22) delay: < 500 ms
- STO warning indication (parameter 31.22) delay: < 1000 ms

Abbreviations

Abbr.	Reference	Description
Cat.	EN ISO 13849-1	Classification of the safety-related parts of a control system in respect of their resistance to faults and their subsequent behavior in the fault condition, and which is achieved by the structural arrangement of the parts, fault detection and/or by their reliability. The categories are: B, 1, 2, 3 and 4.
CCF	EN ISO 13849-1	Common cause failure (%)
DC	EN ISO 13849-1	Diagnostic coverage
HFT	IEC 61508	Hardware fault tolerance
$MTTF_d$	EN ISO 13849-1	Mean time to dangerous failure: (The total number of life units) / (the number of dangerous, undetected failures) during a particular measurement interval under stated conditions
PFD	IEC 61508	Probability of failure on demand
PFH	IEC 61508	Probability of dangerous failures per hour
PL	EN ISO 13849-1	Performance level. Levels a…e correspond to SIL
SC	IEC 61508	Systematic capability
SFF	IEC 61508	Safe failure fraction (%)
SIL	IEC 61508	Safety integrity level (1…3)
SILCL	IEC/EN 62061	Maximum SIL (level 1…3) that can be claimed for a safety function or subsystem
SS1	IEC/EN 61800-5-2	Safe stop 1
STO	IEC/EN 61800-5-2	Safe torque off
T1	IEC 61508-6	Proof test interval. T1 is a parameter used to define the probabilistic failure rate (PFH or PFD) for the safety function or subsystem. Performing a proof test at a maximum interval of T1 is required to keep the SIL capability valid. The same interval must be followed to keep the PL capability (EN ISO 13849) valid. Note that any T1 values given cannot be regarded as a guarantee or warranty. See also section *Maintenance* (page *99*).

15

Optional I/O extension modules

Contents of this chapter

This chapter describes how to install and start up the optional CHDI-01, CMOD-01 and CMOD-01 IO extension modules. The chapter also contains their diagnostics and technical data.

CHDI-01 115/230 V digital input extension module

Safety instructions

WARNING! Obey the safety instructions for the drive. If you ignore the safety instructions, injury or death can occur.

Hardware description

Product overview

The CHDI-01 115/230 V digital input extension module expands the inputs of the drive control unit. It has six high voltage inputs and two relay outputs.

Layout

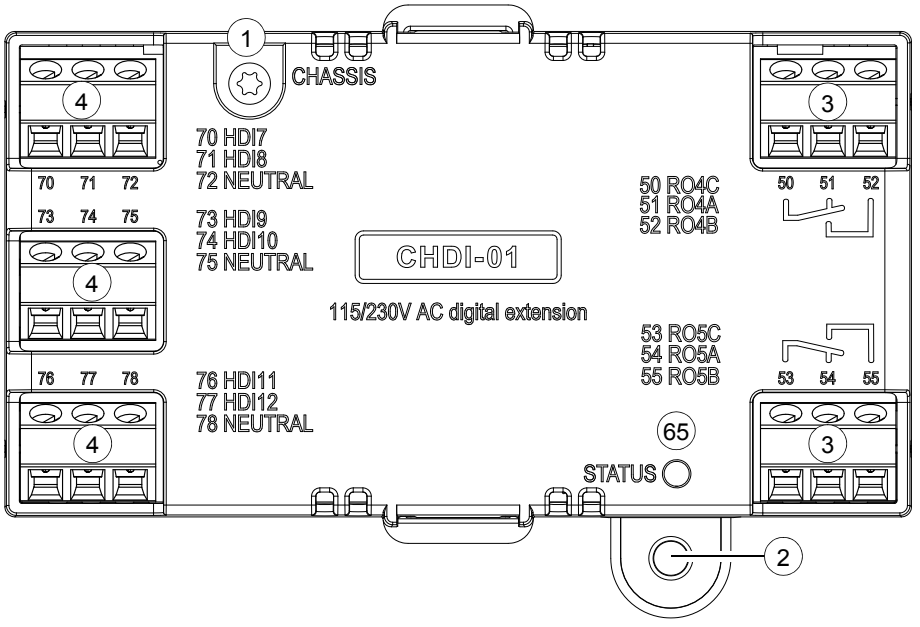

Item	Description	Additional information
1	Grounding screw	-
2	Hole for mounting screw	-
3	3-pin terminal blocks for relay outputs	Page *151*
4	3-pin terminal block for 115/230 V inputs	Page *151*
6	Diagnostic LED	Page *153*

Mechanical installation

Necessary tools and instructions

- Screwdriver and a set of suitable bits.

Unpacking and checking the delivery

1. Open the option package.
2. Make sure that the package contains:
   - CHDI-01 high voltage digital extension module
   - mounting screw.
3. Make sure that there are no signs of damage.

Installing the module

See chapter *Installing option modules* on page *77*.

Electrical installation

Warnings

WARNING! Obey the instructions in chapter *Safety instructions* on page *13*. If you ignore them, injury or death, or damage to the equipment can occur. If you are not a qualified electrician, do not do electrical work.

Make sure that the drive is disconnected from the input power during installation. If the drive is already connected to the input power, wait for 5 minutes after disconnecting the input power.

Necessary tools and instructions

- Screwdriver and a set of suitable bits
- Cabling tools

Terminal designations

For more detailed information on the connectors, see section *Technical data* on page *160*.

Relay outputs

Marking		Description
50	RO4C	Common, C
51	RO4A	Normally closed, NC
52	RO4B	Normally open, NO
53	RO5C	Common, C
54	RO5A	Normally closed, NC
55	RO5B	Normally open, NO

115/230 V inputs

Marking		Description
70	HDI7	115/230 V input 1
71	HDI8	115/230 V input 2
72	NEUTRAL	Neutral point
73	HDI9	115/230 V input 3
74	HDI10	115/230 V input 4
75	NEUTRAL	Neutral point
76	HDI11	115/230 V input 5
77	HDI12	115/230 V input 6
78	NEUTRAL	Neutral point

General cabling instructions

Obey the instructions given in chapter *Guidelines for planning the electrical installation* on page *49*.

Wiring

Connect the external control cables to the applicable module terminals. Ground the outer shield of the cables 360 degrees under a grounding clamp next to the control unit.

Relay output connection example

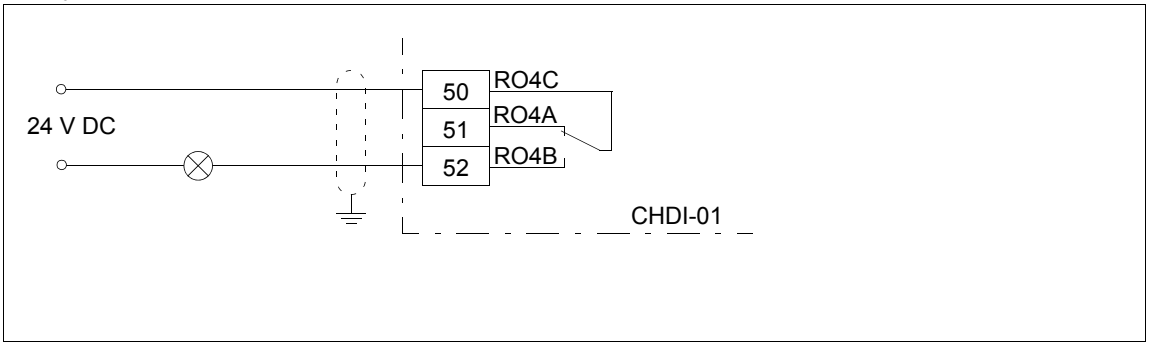

Digital input connection example

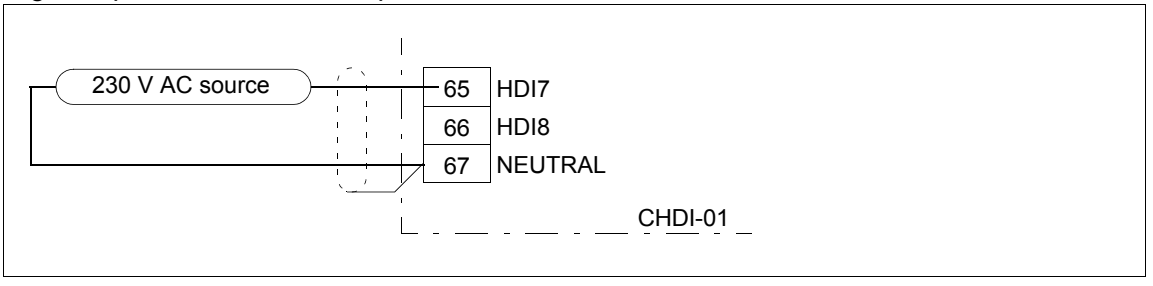

Start-up

Setting the parameters

1. Power up the drive.
2. If no warning is shown,
   - make sure that the value of both parameter 15.02 Detected extension module and parameter 15.01Extension module type is CHDI-01.

   If warning A7AB Extension I/O configuration failure is shown,
   - make sure that the value of parameter 15.02 Detected extension module is CHDI-01.
   - set parameter 15.01 Extension module type to CHDI-01.

   You can now see the parameters of the extension module in parameter group 15 I/O extension module.
3. Set the parameters of the extension module to applicable values.

Parameter setting example for relay output

This example shows how make relay output RO4 of the extension module indicate the reverse direction of rotation of the motor with a one-second delay.

Parameter	Setting
15.07 RO4 source	Reverse
15.08 RO4 ON delay	1 s
15.09 RO4 OFF delay	1 s

Diagnostics

Faults and warning messages

Warning A7AB Extension I/O configuration failure.

LEDs

The extension module has one diagnostic LED.

Color	Description
Green	The extension module is powered up.

Technical data

Dimension drawing:

The dimensions are in millimeters and [inches].

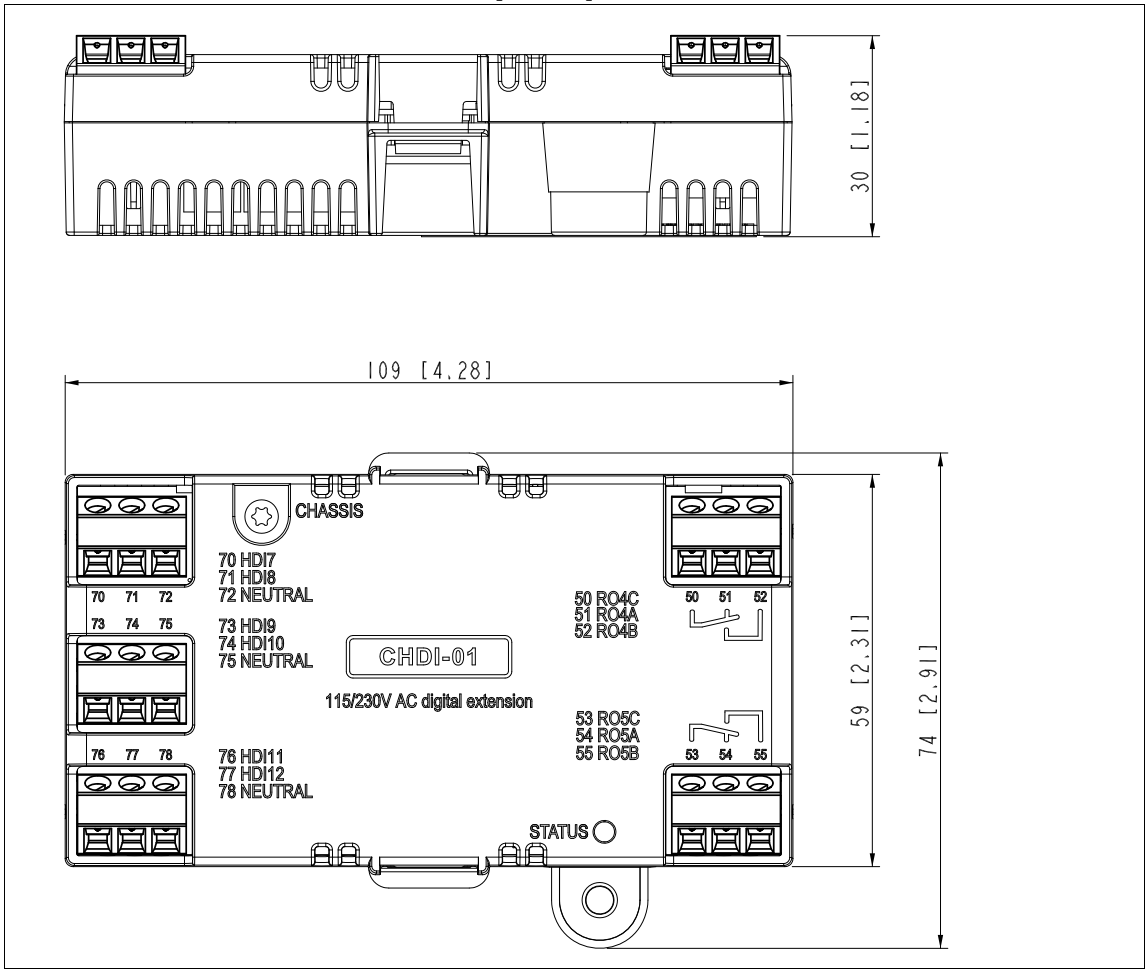

Installation: Into an option slot on the drive control unit

Degree of protection: IP20

Ambient conditions: See the drive technical data.

Package: Cardboard

Isolation areas:

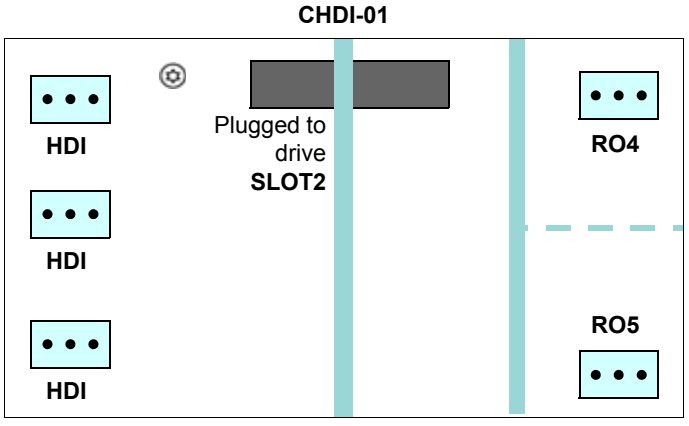

Symbol	Description
	Reinforced insulation (IEC 61800-5-1:2007)
	Functional insulation (IEC 61800-5-1:2007)

Relay outputs (50…52, 53…55):

- Wire size max. 1.5 mm^2
- Minimum contact rating: 12 V / 10 mA
- Maximum contact rating: 250 V AC / 30 V DC / 2 A
- Maximum breaking capacity: 1500 VA

115/230 V inputs (70…78):

- Wire size max. 1.5 mm^2
- Input voltage: 115 to 230 V AC ±10%
- Maximum current leakage in digital off state: 2 mA

CMOD-01 multifunction extension module (external 24 V AC/DC and digital I/O)

Safety instructions

WARNING! Obey the safety instructions for the drive. If you ignore the safety instructions, injury or death can occur.

Hardware description

Product overview

The CMOD-01 multifunction extension module (external 24 V AC/DC and digital I/O) expands the outputs of the drive control unit. It has two relay outputs and one transistor output, which can function as a digital or frequency output.

In addition, the extension module has an external power supply interface, which can be used to power up the drive control unit in case the drive power supply fails. If you do not need the back-up power supply, you do not have to connect it because the module is powered from the drive control unit by default.

WARNING! Do not connect the +24 V AC cable to the control unit ground when the control unit is powered using an external 24 V AC supply.

Layout

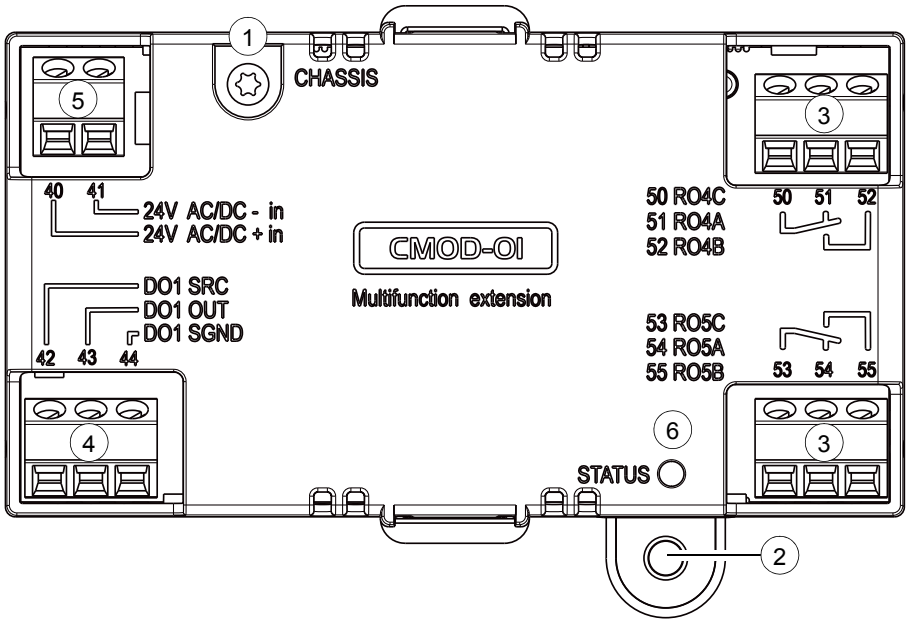

Item	Description	Additional information
1	Grounding screw	-
2	Hole for mounting screw	-
3	3-pin terminal blocks for relay outputs	Page *157*
4	3-pin terminal block for transistor output	Page *157*
5	2-pin terminal block for external power supply	Page *157*
6	Diagnostic LED	Page *160*

Mechanical installation

Necessary tools and instructions

- Screwdriver and a set of suitable bits.

Unpacking and checking the delivery

1. Open the option package.
2. Make sure that the package contains:
   - CMOD-01 multifunction extension module
   - mounting screw.
3. Make sure that there are no signs of damage.

Installing the module

See chapter *Installing option modules* on page *77*.

Electrical installation

Warnings

WARNING! Obey the instructions in chapter *Safety instructions* on page *13*. If you ignore them, injury or death, or damage to the equipment can occur. If you are not a qualified electrician, do not do electrical work.

Make sure that the drive is disconnected from the input power during installation. If the drive is already connected to the input power, wait for 5 minutes after disconnecting the input power.

Necessary tools and instructions

- Screwdriver and a set of suitable bits
- Cabling tools

Terminal designations

For more detailed information on the connectors, see section *Technical data* on page *160*.

Relay outputs

Marking		**Description**
50	RO4C	Common, C
51	RO4A	Normally closed, NC
52	RO4B	Normally open, NO
53	RO5C	Common, C
54	RO5A	Normally closed, NC
55	RO5B	Normally open, NO

Transistor output

Marking		**Description**
42	DO1 SRC	Source input
43	DO1 OUT	Digital or frequency output
44	DO1 SGND	Ground (earth) potential

External power supply

The external power supply is needed only if you want to connect an external back-up power supply for the drive control unit.The control unit has corresponding terminals 40 and 41 for external power supply. connection

Marking		Description
40	24V AC/DC + in	External 24 V (AC/DC) input
41	24V AC/DC - in	External 24 V (AC/DC) input

General cabling instructions

Obey the instructions given in chapter *Guidelines for planning the electrical installation* on page *49*.

Wiring

Connect the external control cables to the applicable module terminals. Ground the outer shield of the cables 360 degrees under a grounding clamp next to the control unit.

Relay output connection example

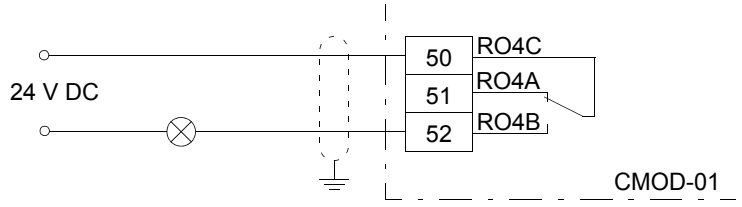

Digital output connection example

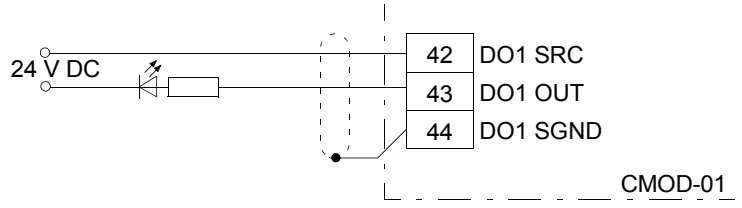

Frequency output connection example

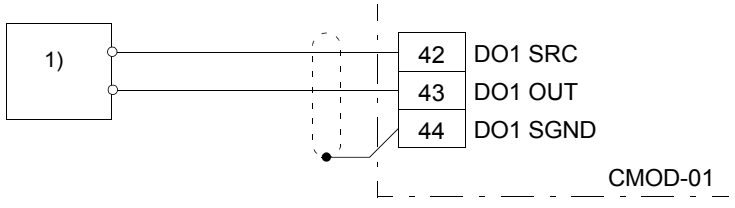

1) An externally supplied frequency indicator which provides, for example:

- a 40 mA / 12 V DC power supply for the sensor circuit (CMOD frequency output)
- suitable voltage pulse input (10 Hz … 16 kHz).

External power supply connection example

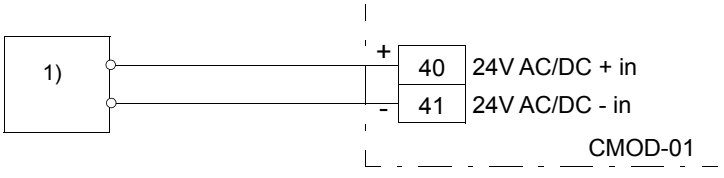

1) External power supply, 24 V AC/DC

WARNING! Do not connect the +24 V AC cable to the control unit ground when the control unit is powered using an external 24 V AC supply.

Start-up

Setting the parameters

1. Power up the drive.
2. If no warning is shown,
   - make sure that the value of both parameter 15.02 Detected extension module and parameter 15.01Extension module type is CMOD-01.

   If warning A7AB Extension I/O configuration failure is shown,
   - make sure that the value of parameter 15.02 Detected extension module is CMOD-01.
   - set parameter 15.01 Extension module type to CMOD-01.

   You can now see the parameters of the extension module in parameter group 15 I/O extension module.
3. Set the parameters of the extension module to applicable values.

   Examples are given below.

Parameter setting example for relay output

This example shows how make relay output RO4 of the extension module indicate the reverse direction of rotation of the motor with a one-second delay.

Parameter	Setting
15.07 RO4 source	Reverse
15.08 RO4 ON delay	1 s
15.09 RO4 OFF delay	1 s

Parameter setting example for digital output

This example shows how to make digital output DO1 of the extension module indicate the reverse direction of rotation of the motor with a one-second delay.

Parameter	Setting
15.22 DO1 configuration	Digital output
15.23 DO1 source	Reverse
15.24 DO1 ON delay	1 s
15.25 DO1 OFF delay	1 s

Parameter setting example for frequency output

This example shows how to make digital output DO1 of the extension module indicate the motor speed 0... 1500 rpm with a frequency range of 0...10000 Hz.

Parameter	Setting
15.22 DO1 configuration	Frequency output
15.33 Freq out 1 source	01.01
15.34 Freq out 1 src min	0
15.35 Freq out 1 src max	1500.00
15.36 Freq out 1 at src min	1000 Hz
15.37 Freq out 1 at src max	10000 Hz

Diagnostics

Faults and warning messages

Warning A7AB Extension I/O configuration failure.

LEDs

The extension module has one diagnostic LED.

Color	Description
Green	The extension module is powered up.

Technical data

Dimension drawing:

The dimensions are in millimeters and [inches].

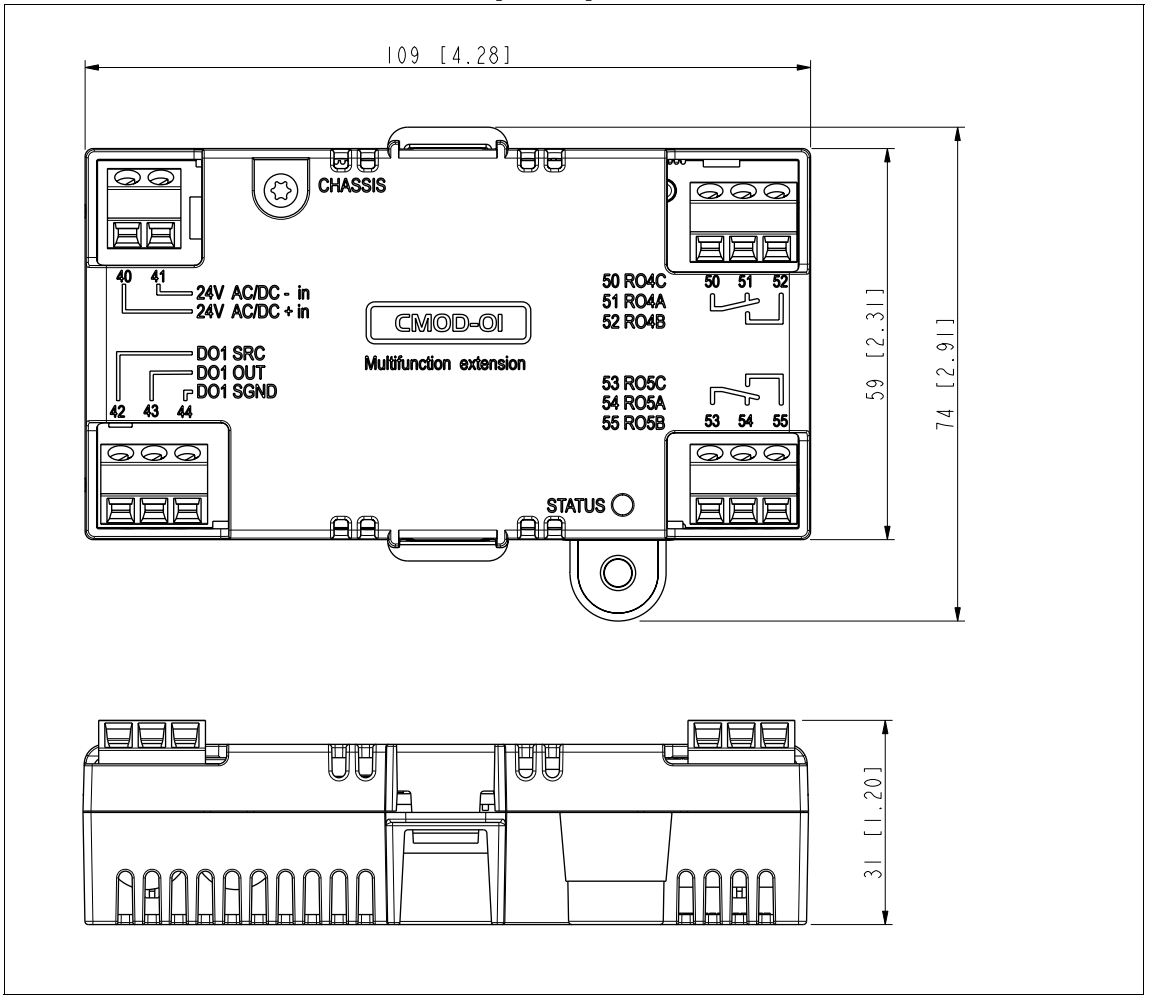

Installation: Into an option slot on the drive control unit

Degree of protection: IP20

Ambient conditions: See the drive technical data.

Package: Cardboard

Isolation areas:

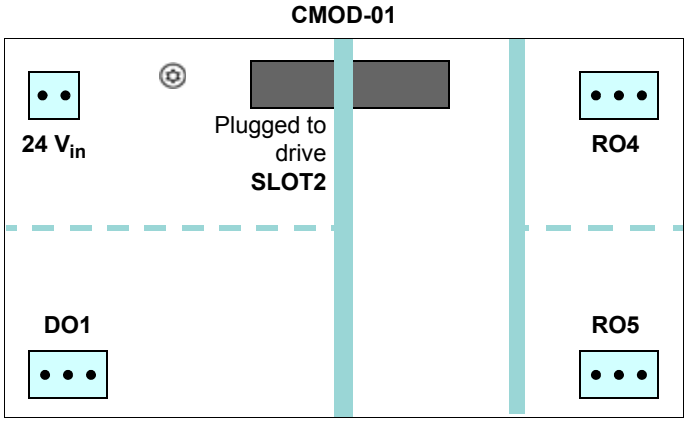

Symbol	Description
	Reinforced insulation (IEC 61800-5-1:2007)
	Functional insulation (IEC 61800-5-1:2007)

Relay outputs (50…52, 53…55):

- Wire size max. 1.5 mm^2
- Minimum contact rating: 12 V / 10 mA
- Maximum contact rating: 250 V AC / 30 V DC / 2 A
- Maximum breaking capacity: 1500 VA

Transistor output (42…44):

- Wire size max. 1.5 mm^2
- Type: Transistor output PNP
- Maximum switching voltage: 30 V DC
- Maximum switching current: 100 mA / 30 V DC, short-circuit protected
- Frequency: 10 Hz … 16 kHz
- Resolution: 1 Hz
- Inaccuracy: 0.2%

External power supply (40…41):

- Wire size max. 1.5 mm^2
- 24 V AC / V DC ±10% (GND, user potential)
- Maximum current consumption: 25 W, 1.04 A at 24 V DC

CMOD-02 multifunction extension module (external 24 V AC/DC and isolated PTC interface)

Safety instructions

WARNING! Obey the safety instructions for the drive. If you ignore the safety instructions, injury or death can occur.

Hardware description

Product overview

The CMOD-02 multifunction extension module (external 24 V AC/DC and isolated PTC interface) has a motor thermistor connection for supervising the motor temperature and one relay output, which indicates the thermistor status. To trip the drive, the user must connect this overtemperature indication back to the drive, for example, to its Safe torque off input.

In addition, the extension module has an external power supply interface, which can be used to power up the drive control unit in case the drive power supply fails. If you do not need the back-up power supply, you do not have to connect it because the module is powered from the drive control unit by default.

There is reinforced insulation between the motor thermistor connection, the relay output and the drive control unit interface. Thus, you can connect a motor thermistor to the drive through the extension module.

WARNING! Do not connect the +24 V AC cable to the control unit ground when the control unit is powered using an external 24 V AC supply.

Layout

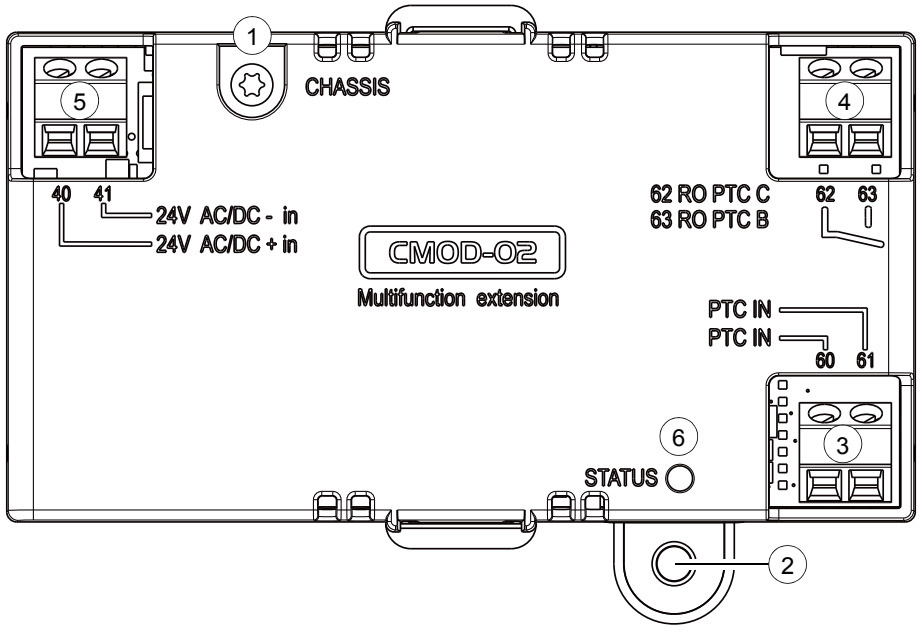

Item	Description	Additional information
1	Grounding screw	-
2	Hole for mounting screw	-
3	2-pin terminal block for motor thermistor connection	Page *164*
4	2-pin terminal block for relay output	Page *164*
5	2-pin terminal block for external power supply	Page *164*
6	Diagnostic LED	Page *166*

Mechanical installation

Necessary tools and instructions

- Screwdriver and a set of suitable bits

Unpacking and checking the delivery

1. Open the option package.
2. Make sure that the package contains:
   - CMOD-02 multifunction extension module
   - mounting screw
3. Make sure that there are no signs of damage.

Installing the module

See chapter *Installing option modules* on page *77*.

Electrical installation

Warnings

WARNING! Obey the instructions in chapter *Safety instructions* on page *13*. If you ignore them, injury or death, or damage to the equipment can occur. If you are not a qualified electrician, do not do electrical work.

Make sure that the drive is disconnected from the input power during installation. If the drive is already connected to the input power, wait for 5 minutes after disconnecting the input power.

Necessary tools and instructions

- Screwdriver and a set of suitable bits
- Cabling tools

Terminal designations

For more detailed information on the connectors, see section *Technical data* on page *166*.

Motor thermistor connection

Marking		Description
60	PTC IN	PTC connection
61	PTC IN	Ground (earth) potential

Relay output

Marking		Description
62	RO PTC C	Common, C
63	RO PTC B	Normally open, NO

External power supply

The external power supply is needed only if you want to connect an external back-up power supply for the drive control unit. The control unit has corresponding terminals 40 and 41 for external power supply connection..

Marking		Description
40	24V AC/DC + in	External 24 V (AC/DC) input
41	24V AC/DC - in	External 24 V (AC/DC) input

General cabling instructions

Obey the instructions given in chapter *Guidelines for planning the electrical installation* on page *49*.

Wiring

Connect the external control cables to the applicable module terminals. Ground the outer shield of the cables 360 degrees under a grounding clamp next to the control unit.

Motor thermistor connection example

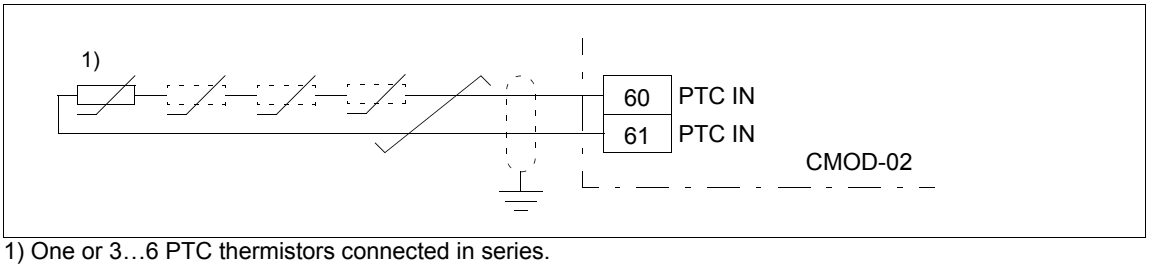

1) One or 3…6 PTC thermistors connected in series.

The PTC input is reinforced/double insulated. If the motor part of the PTC sensor and wiring are reinforced/double insulated, voltages on the PTC wiring are within SELV limits.

If the motor PTC circuit is not reinforced/double insulated (ie, it is basic insulated), it is mandatory to use reinforced/double insulated wiring between the motor PTC and CMOD-02 PTC terminal.

Relay output connection example

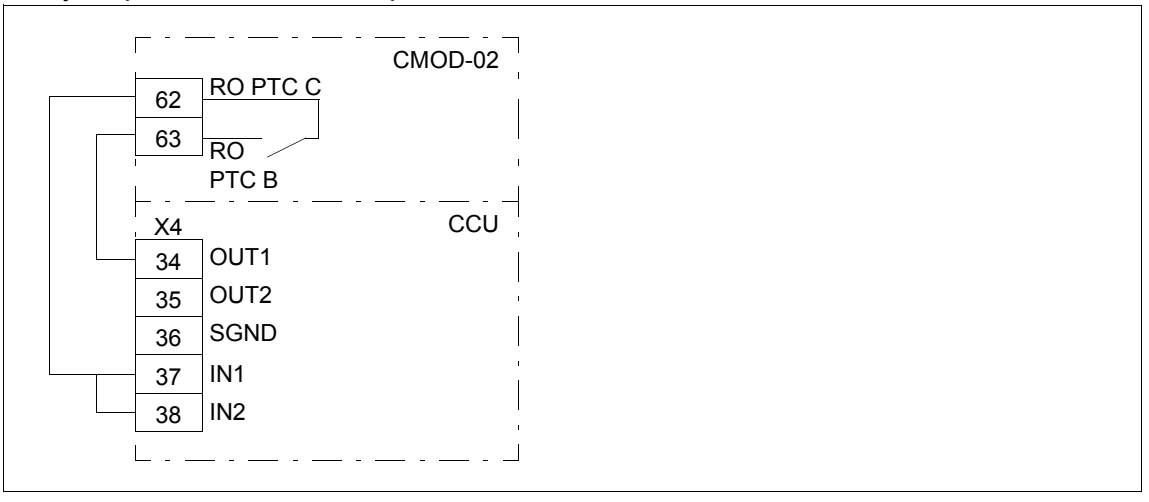

Power supply connection example

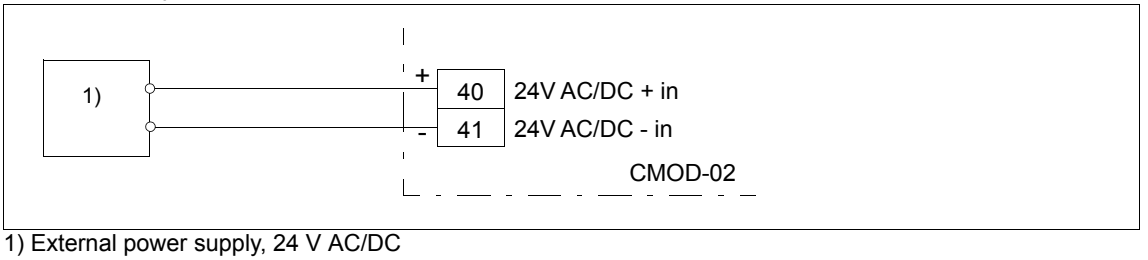

1) External power supply, 24 V AC/DC

WARNING! Do not connect the +24 V AC cable to the control unit ground when the control unit is powered using an external 24 V AC supply.

Start-up

Setting the parameters

1. Power up the drive.
2. If no warning is shown,
   - make sure that the value of both parameter 15.02 Detected extension module and parameter 15.01Extension module type is CMOD-02.

If warning A7AB Extension I/O configuration failure is shown,

- make sure that the value of parameter 15.02 Detected extension module is CMOD-02.
- set parameter 15.01 Extension module type to CMOD-02.

You can now see the parameters of the extension module in parameter group 15 I/O extension module.

Diagnostics

Faults and warning messages

Warning A7AB Extension I/O configuration failure.

LEDs

The extension module has one diagnostic LED.

Color	Description
Green	The extension module is powered up.

Technical data

Dimension drawing:

The dimensions are in millimeters and [inches].

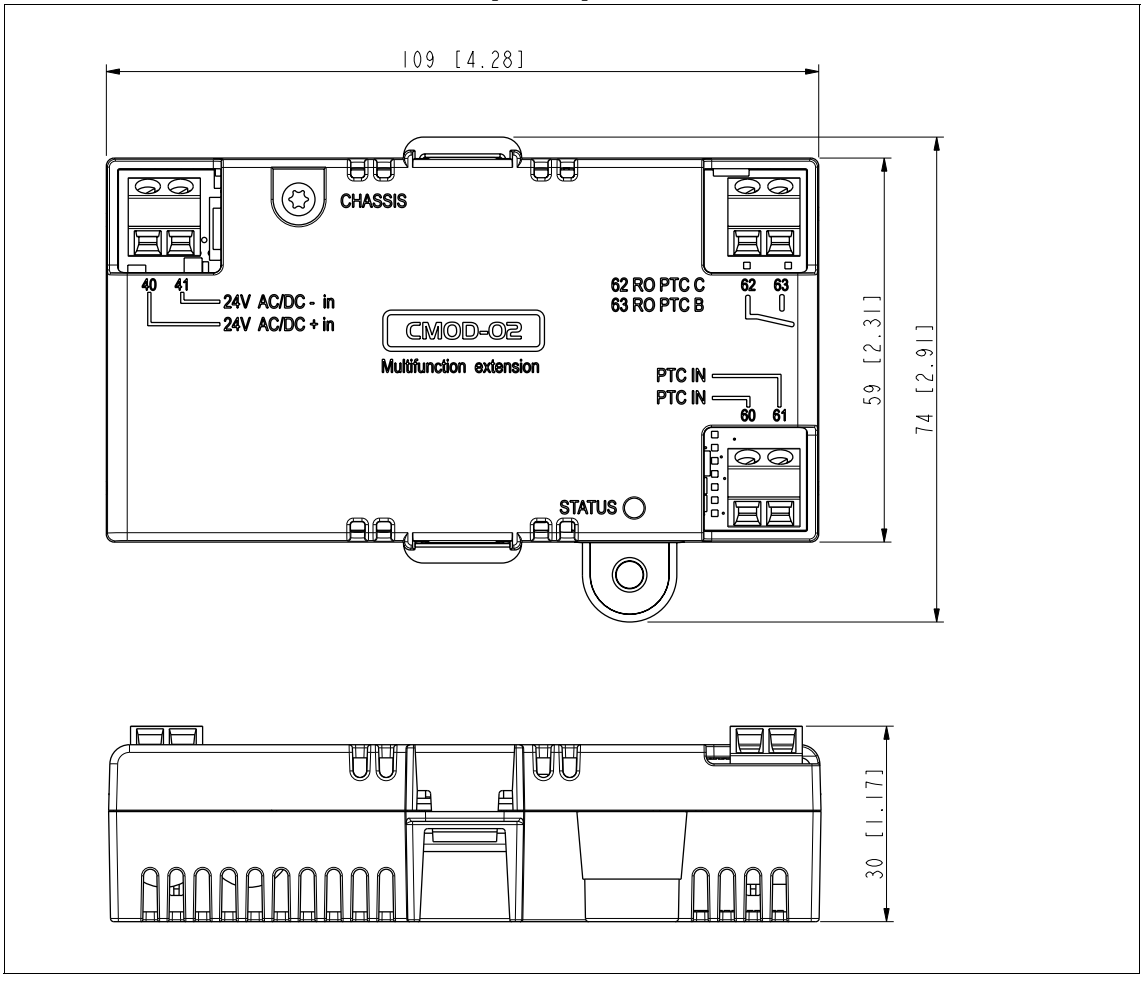

Installation: Into an option slot on the drive control unit

Degree of protection: IP20

Ambient conditions: See the drive technical data.

Package: Cardboard

Isolation areas:

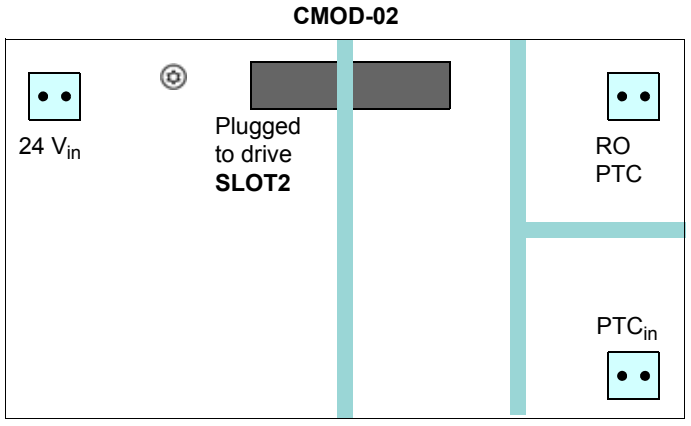

Symbol	Description
	Reinforced insulation (IEC 61800-5-1:2007)

Motor thermistor connection (60…61):

- Wire size max. 1.5 mm^2
- Supported standards: DIN 44081 and DIN 44082
- Number of PTC thermistor relays: 1 or 3…6 in series
- Triggering threshold: 3.6 kohm
- Recovery threshold: 1.6 kohm
- PTC terminal voltage: $\leq$ 5.0 V
- PTC terminal current: < 1 mA
- Short-circuit detection: < 50 ohm

Relay output (62…63):

- Wire size max. 1.5 mm^2
- Maximum contact rating: 250 V AC / 30 V DC / 5 A
- Maximum breaking capacity: 1000 VA

External power supply (40…41):

- Wire size max. 1.5 mm^2
- 24 V AC / V DC ±10% (GND, user potential)
- Maximum current consumption: 25 W, 1.04 A at 24 V DC

CPTC-02 ATEX-certified thermistor protection module, (external 24 V AC/DC and isolated PTC interface)

See *CPTC-02 ATEX-certified thermistor protection module, Ex II (2) GD (+L537+Q971) user's manual* (3AXD50000030058 [English]).

Further information

Product and service inquiries

Address any inquiries about the product to your local ABB representative, quoting the type designation and serial number of the unit in question. A listing of ABB sales, support and service contacts can be found by navigating to www.abb.com/searchchannels.

Product training

For information on ABB product training, navigate to new.abb.com/service/training.

Providing feedback on ABB Drives manuals

Your comments on our manuals are welcome. Navigate to new.abb.com/drives/manuals-feedback-form.

Document library on the Internet

You can find manuals and other product documents in PDF format on the Internet at www.abb.com/drives/documents.

Contact us

www.abb.com/drives
www.abb.com/drivespartners

3AXD50000032622 Rev A (EN) 2016-03-16

Power and productivity
for a better world™