ABB drives

Supplement
Flange mounting kit installation

Power and productivity
for a better world™

List of related manuals

Drive hardware manuals and guides	Code (English)	Note
Flange mounting kit installation supplement	*3AXD50000019100*	
Flange mounting kit quick installation guide for ACX580-01 frames R0 to R5	*3AXD50000036610*	*(type codes ACX580-01-02A6-4, ACX580-01-03A3-4, etc.)*
Flange mounting kit quick installation guide for ACX580-01 frames R1 to R3	*3AXD50000119172*	*(type codes ACX580-01-02A7-4, ACX580-01-03A4-4, etc.)*
Flange mounting kit quick installation guide for ACS880-01 frames R1 to R3	*3AXD50000026158*	
Flange mounting kit quick installation guide for ACS880-01 frames R4 to R5	*3AXD50000026159*	
Flange mounting kit quick installation guide for ACS880-01 and ACX580-01 frames R6 to R9	*3AXD50000019099*	
ACS880-01 hardware manual	*3AUA0000078093*	
ACS880-01 quick installation guide for frames R1 to R3	*3AUA0000085966*	
ACS880-01 quick installation guide for frames R4 and R5	*3AUA0000099663*	
ACS880-01 quick installation guide for frames R6 to R9	*3AUA0000099689*	
ACS580-01 hardware manual	*3AXD50000018826*	
ACS580-01 quick installation and start-up guide for frames R6 to R9	*3AXD50000009286*	
ACH580-01 (0.75 to 250 kW) hardware manual	*3AUA0000076331*	
ACH580-01 quick installation and start-up guide	*3AUA0000076330*	
ACQ580-01 (0.75 to 250 kW) hardware manual	*3AXD50000035866*	
ACQ580-01 quick installation and start-up guide for frames R0 to R5	*3AXD50000035755*	
ACQ580-01 quick installation and start-up guide for frames R6 to R9	*3AXD50000037301*	

You can find manuals and other product documents in PDF format on the Internet. See section *Document library on the Internet* on the inside of the back cover. For manuals not available in the Document library, contact your local ABB representative.

The codes below open on-line listings of the manuals applicable to the product.

ACS880-01 manuals

ACH580-01 manuals

ACH580-31 manuals

ACS580-01 manuals

ACQ580-01 manuals

ACQ580-31 manuals

ACS880-11 manuals

ACS880-31 manuals

Supplement

Flange mounting kit installation

Table of contents

3. Mechanical installation for ACS880-01

4. Mechanical installation for ACS580-01, ACH580-01 and ACQ580-01

5. Mechanical installation for ACS880-11 and ACS880-31

6. Mechanical installation for ACH580-31 and ACQ580-31

© 2018 ABB Oy. All Rights Reserved.

3AXD50000019100 Rev E
EN
EFFECTIVE: 2018-02-02

Table of contents

List of related manuals 2

1. Introduction to the supplement

Contents of this chapter 11
Applicability 11
Safety instructions 11
Target audience 11
Purpose of the supplement 12
Contents of the manual 12
Related documents 12

2. Hardware description

Contents of this chapter 13
Product overview 13
Layout and mounting position 13
Example: tilted position 14
Example: upright position 15
Degree of protection 15
ACS880-01, ACS580-01, ACSH580-01 and ACQ580-01 15
ACS880-11, ACS880-31, ACH580-31 and ACX580-31 15
Special requirements 16
Ordering codes 17

3. Mechanical installation for ACS880-01

Contents of this chapter 19
Safety 19
Examining the installation site 20
Additional requirements for cabinet installations 20
Necessary tools 20
Moving the drive 20
Unpacking and examining the delivery 21
Transport package contents 21
Frames R1 to R5 22
Frames R6 to R9 23
Flange mounting kit package contents 24
Frames R1 to R3 24
Frames R4 to R5 25
Frames R6 to R9 26
Mounting template 27
Installing the drive 28
Free space requirements 28
Installing drives above one another 29
Installation procedure 30
Frames R1 to R3 30

Frames R4 to R5 39
Frames R6 to R9 47

4. Mechanical installation for ACS580-01, ACH580-01 and ACQ580-01

Contents of this chapter 53
Safety 53
Examining the installation site 54
Additional requirements for cabinet installations 54
Necessary tools 54
Moving the drive 54
Unpacking and examining the delivery 55
Transport package contents 55
Frames R0 to R4 55
Frames R5 55
Frames R6 to R9 56
Flange mounting kit package contents 57
Frames R0 to R4 57
Frame R5 58
Frames R6 to R9 59
Mounting template 59
Installing the drive 60
Free space requirements 60
Installing drives above one another 61
Installation procedure 62
Frames R0 to R5 62
Frames R6 to R9 72

5. Mechanical installation for ACS880-11 and ACS880-31

Contents of this chapter 77
Safety 77
Examining the installation site 78
Additional requirements for cabinet installations 78
Necessary tools 78
Moving the drive 78
Unpacking and examining the delivery 79
Transport package contents 79
Frame R3 80
Frames R6 and R8 81
Flange mounting kit package contents 82
Frame R3 82
Frames R6 and R8 83
Mounting template 83
Installing the drive 84
Free space requirements 84
Installing drives above one another 85
Installation procedure 86
Frame R3 86
Frames R6 and R8 92

6. Mechanical installation for ACH580-31 and ACQ580-31

Contents of this chapter . . . 101
Safety . . . 102
Examining the installation site . . . 102
Additional requirements for cabinet installations . . . 102
Necessary tools . . . 103
Moving the drive . . . 103
Unpacking and examining the delivery . . . 103
Transport package contents . . . 103
Frame R3 . . . 104
Frames R6 and R8 . . . 105
Flange mounting kit package contents . . . 106
Frame R3 . . . 106
Frames R6 and R8 . . . 107
Example mounting template . . . 108
Installing the drive . . . 109
Free space requirements . . . 109
Installing drives above one another . . . 110
Installation procedure . . . 111
Frame R3 . . . 111
Frames R6 and R8 . . . 118

7. Dimension drawings for ACS880-01

Contents of this chapter . . . 125
Frame R1 . . . 126
Attaching points and hole dimensions . . . 127
Frame R2 . . . 128
Attaching points and hole dimensions . . . 129
Frame R3 . . . 130
Attaching points and hole dimensions . . . 131
Frame R4 . . . 132
Attaching points and hole dimensions . . . 134
Frame R5 . . . 135
Attaching points and hole dimensions . . . 137
Frame R6 . . . 138
Attaching points and hole dimensions . . . 140
Frame R7 . . . 141
Attaching points and hole dimensions . . . 143
Frame R8 . . . 144
Attaching points and hole dimensions . . . 146
Frame R9 . . . 147
Attaching points and hole dimensions . . . 149

8. Dimension drawings for ACS580-01, ACH580-01 and ACQ580-01

Contents of this chapter . . . 151
Frame R0 . . . 152
Frame R1 . . . 154
Attaching points and hole dimensions . . . 156

Frame R2 157
Attaching points and hole dimensions 159
Frame R3 160
Attaching points and hole dimensions 162
Frame R1 163
Attaching points and hole dimensions 165
Frame R2 166
Attaching points and hole dimensions 168
Frame R3 169
Attaching points and hole dimensions 171
Frame R4 172
Frame R5 174
Frames R4...R5 176
Attaching points and hole dimensions 176
Frame R6 177
Attaching points and hole dimensions 179
Frame R7 180
Attaching points and hole dimensions 182
Frame R8 183
Attaching points and hole dimensions 185
Frame R9 186
Attaching points and hole dimensions 188

9. Dimension drawings for ACS880-11 and ACS880-31

Contents of this chapter 189
Frame R3 190
Attaching points and hole dimensions 191
Frame R6 192
Attaching points and hole dimensions 194
Frame R8 195
Attaching points and hole dimensions 197

10. Dimension drawings for ACH580-31 and ACQ580-31

Contents of this chapter 199
Frame R3 200
Attaching points and hole dimensions 201
Frame R6 202
Attaching points and hole dimensions 204
Frame R8 205
Attaching points and hole dimensions 207

11. ACS880-01 mounting examples

Contents of this chapter 209
Frame R1 210
Frame R2 213
Frame R3 216
Frame R4 219
Frame R5 222

Frame R6 225
Frame R7 228
Frame R8 231
Frame R9 234

Further information

Product and service inquiries 237
Product training 237
Providing feedback on ABB Drives manuals 237
Document library on the Internet 237

1

Introduction to the supplement

Contents of this chapter

This chapter describes the supplement.

Applicability

This supplement applies to the following flange mounting kits:

- ACS880-01 drive (frames R1 to R9)
- ACS880-11 and ACS880-31 drives (frames R3, R6, and R8)
- ACS580-01, ACH580-01 and ACQ580-01 drives (frames R0 to R9)
- ACH580-31 and ACQ580-31 drives (frames R3, R6 and R8).

Safety instructions

Obey the general safety instructions in the hardware manual and the task-specific instructions in this supplement.

Target audience

This supplement is intended for people who plan the installation and install the drive with the flange mounting kit. Read the supplement before you work on the drive. You are expected to know the fundamentals of electricity, wiring, electrical components and electrical schematic symbols.

The supplement is written for readers worldwide. Both SI and imperial units are shown.

Purpose of the supplement

This supplement tells you how to install the drive mechanically onto an opening in a mounting plate with the flange mounting kit.

Contents of the manual

The chapters of the supplement are briefly described below.

Introduction to the supplement introduces the supplement.

Hardware description describes the flange mounting kit.

Mechanical installation for ACS880-01, *Mechanical installation for ACS580-01, ACH580-01 and ACQ580-01*, *Mechanical installation for ACS880-11 and ACS880-31* and *Mechanical installation for ACH580-31 and ACQ580-31* describe how to install the drive with the flange mounting kit mechanically.

Dimension drawings for ACS880-01, *Dimension drawings for ACS580-01, ACH580-01 and ACQ580-01*, *Dimension drawings for ACS880-11 and ACS880-31* and *Dimension drawings for ACH580-31 and ACQ580-31* contain dimension drawings of the flange mounting kit.

ACS880-01 mounting examples contains example drawings for the different frame sizes.

Related documents

See *List of related manuals* on the inside of the front cover.

2

Hardware description

Contents of this chapter

This chapter describes the flange mounting kit.

Product overview

The flange mounting kit contains brackets for attaching the drive onto a mounting plate so that the heat sink of the drive is in the cooling air channel and the front part on the other side of the mounting plate. Cable boxes are not compatible with flange mounting kits.

Layout and mounting position

The flange-mounted drive is installed in a tilted (ACS880-01 frames R1 to R5 and ACS880-11, ACS880-31, ACH580-31 and ACQ580-31 frame R3) or an upright position.

Example: tilted position

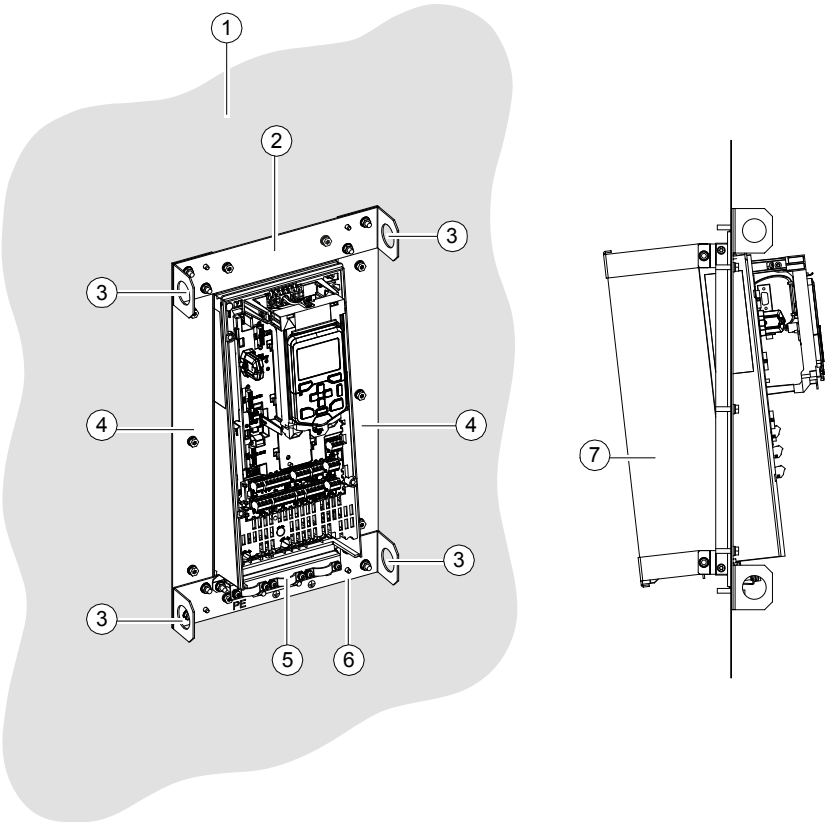

1 Mounting plate
2 Top flange bracket
3 Lifting hole
4 Side flange bracket
5 Cable shelf
6 Bottom flange bracket
7 Drive heat sink in the cooling air channel

Example: upright position

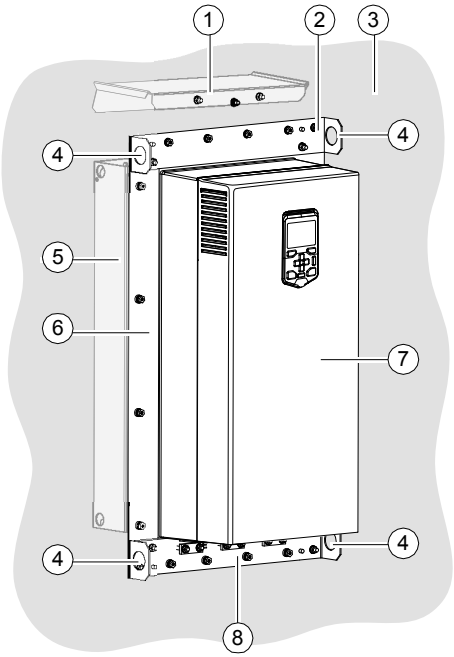

1 Hood (in the cooling air channel; required for UL type 12)
2 Top flange bracket
3 Mounting plate
4 Lifting hole
5 Drive heat sink in the cooling air channel
6 Side flange bracket
7 Drive front side
8 Bottom flange bracket

Degree of protection

ACS880-01, ACS580-01, ACSH580-01 and ACQ580-01

The degree of protection of a flange-mounted IP21 drive is IP20 on the front side and IP55 on the backside. The degree of protection of a flange-mounted IP55 drive is IP55 on both the front side and the backside.

ACS880-11, ACS880-31, ACH580-31 and ACX580-31

The degree of protection of a flange-mounted IP20 drive is IP20 on the front side and IP55 on the backside. The degree of protection of a flange-mounted IP21 drive is IP21 on the front side and IP55 on the backside. The degree of protection of a flange-mounted IP55 drive is IP55 on both the front side and the backside.

Special requirements

With some frame sizes, you must insert a sealing plug into the drive. Also with some degrees of protection, you must not leave the drive cover in place. See the tables for more information.

<table>
<tr><th>Frame size</th><th>ACS580-01 IP21
ACH580-01 IP21
ACQ580-01 IP21</th><th>ACS580-01 IP55
ACH580-01 IP55
ACQ580-01 IP55</th></tr>
<tr><td>R0</td><td rowspan="5">Delivered with cover.
Insert sealing plug.

Remove cover or order internal fan (sold separately).
Exception: In dry environment, you can leave the cover in place without inserting a sealing plug.</td><td rowspan="5">Delivered with cover.
Insert sealing plug.
You can leave the cover in place.</td></tr>
<tr><td>R1</td></tr>
<tr><td>R2</td></tr>
<tr><td>R3</td></tr>
<tr><td>R4</td></tr>
<tr><td>R5</td><td colspan="2">Delivered with cover. You can leave the cover in place.</td></tr>
<tr><td>R6</td><td rowspan="4">Delivered with cover. You can leave the cover in place.</td><td rowspan="4">-</td></tr>
<tr><td>R7</td></tr>
<tr><td>R8</td></tr>
<tr><td>R9</td></tr>
</table>

Frame size	ACS880-01 IP20, IP21, IP55
R1	Insert sealing plug.
R2	
R3	
R4	Insert sealing plug and attach sealing tapes.
R5	
R6	-
R7	
R8	
R9	

Frame size	ACS880-11, ACS880-31, ACH580-31, ACQ580-31 (IP21, IP55)
R3	-
R6	Attach gasket.
R8	

Ordering codes

The flange mounting kit is a plus code option (+C135) or can be ordered with these ordering codes also separately.

This table applies to ACS580-01 R0 frame types -02A6-4, -03A3-4, -04A0-4 and -05A6-4 and ACS580-01 R1 frame types -07A2-4, -09A4-4 and -12A6-4.

Frame size	Ordering code ACS580-01, ACH580-01, ACQ580-01	Ordering code ACS880-01
R0	3AXD50000031455 (IP21 and IP55)	
R1	3AXD50000031456 (IP21 and IP55)	3AXD50000024175 (IP20 and IP21)
R2	3AXD50000031457 (IP21 and IP55)	3AXD50000024176 (IP20 and IP21)
R3	3AXD50000031458 (IP21 and IP55)	3AXD50000024177 (IP20 and IP21)
R4	3AXD50000031460 (IP21 and IP55)	3AXD50000027190 (IP20 and IP21)
R5	3AXD50000031461 (IP21 and IP55)	3AXD50000018602 (IP20 and IP21)
R6	3AXD50000018852 (IP21)	3AXD50000018852 (IP20 and IP21)
R7	3AXD50000018853 (IP21)	3AXD50000018853 (IP20 and IP21)
R8	3AXD50000018854 (IP21)	3AXD50000018854 (IP20 and IP21)
R9	3AXD50000018855 (IP21)	3AXD50000018855 (IP20 and IP21)

Frame size	ACS580-01, ACH580-01, ACQ580-01 drive type	Ordering code
R1	ACS580-01-02A7-4	3AXD50000105311
R1	ACS580-01-03A4-4	3AXD50000105311
R1	ACS580-01-04A1-4	3AXD50000105311
R1	ACS580-01-05A7-4	3AXD50000105311
R1	ACS580-01-07A3-4	3AXD50000105311
R1	ACS580-01-09A5-4	3AXD50000105311
R1	ACS580-01-12A7-4	3AXD50000105311
R2	ACS580-01-018A-4	3AXD50000105328
R2	ACS580-01-026A-4	3AXD50000105328
R3	ACS580-01-033A-4	3AXD50000105335
R3	ACS580-01-039A-4	3AXD50000105335
R3	ACS580-01-046A-4	3AXD50000105335

Frame size	Ordering code ACS880-11	Ordering code ACS880-31
R3	3AXD50000181018	3AXD50000181018
R6	3AXD50000179633	3AXD50000179633

Frame size	Ordering code ACS880-11	Ordering code ACS880-31
R8	3AXD50000164318	3AXD50000164318

Frame size	Ordering code ACH580-31	Ordering code ACQ580-31
R3	3AXD50000181018	3AXD50000181018
R6	3AXD50000179633	3AXD50000179633
R8	3AXD50000164318	3AXD50000164318

Note for ACS880-01: The separately ordered flange retrofit is kit compatible only with drives that have been produced after 2016-01-01.

3

Mechanical installation for ACS880-01

Contents of this chapter

This chapter describes how to install the drive with the flange mounting kit mechanically.

Safety

WARNING! For frame sizes R6 to R9: Use the lifting eyes of the drive when you lift the drive. Do not tilt the drive. The drive is heavy and its center of gravity is high. An overturning drive can cause physical injury.

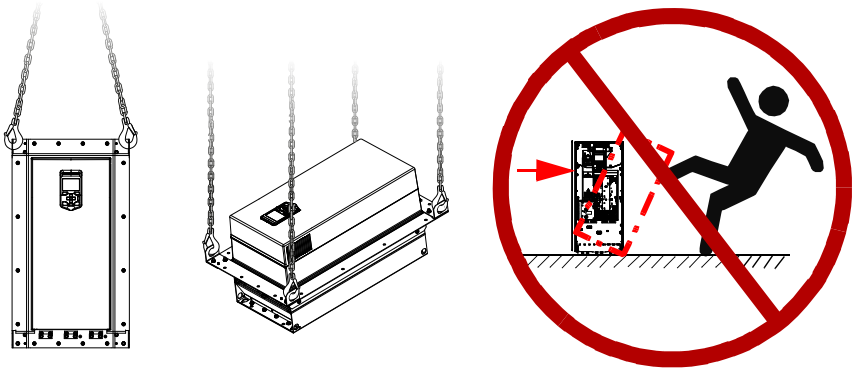

Examining the installation site

Make sure that the installation site agrees with these requirements:

- The installation site has sufficient ventilation to prevent overheating of the drive. See section *Losses, cooling data and noise* in the hardware manual for the required air flow in the cooling air channel and in the front part of the drive.
- The operation conditions of the drive agree with the specifications in section *Ambient conditions* in the hardware manual.
- The mounting plate is vertical, not flammable and strong enough to hold the weight of the drive module.
- The material below the installation is not flammable.
- There is enough free space above and below the drive for cooling air flow, service and maintenance. There is enough free space in front of the drive for operation, service and maintenance. See section *Free space requirements* on page *28* and *Dimensions, weights and free space requirements* in the hardware manual.

Additional requirements for cabinet installations

Make sure that the cooling air gratings of the drive will not be covered. Make sure that the required cooling air change is achieved. In a totally closed cabinet with no forced ventilation, a fan for circulating the air inside the cabinet may be needed.

Necessary tools

- Drill and drill bits
- Screwdriver

Moving the drive

Move the transport package by a pallet truck to the installation site.

Unpacking and examining the delivery

Transport package contents

The flange mounting kit package is either in the drive package, tied with straps onto the drive package or sent separately. Examine that all items are present and there are no signs of damage. Read the data on the type designation label of the drive to make sure that the drive is of the correct type.

Frames R1 to R5

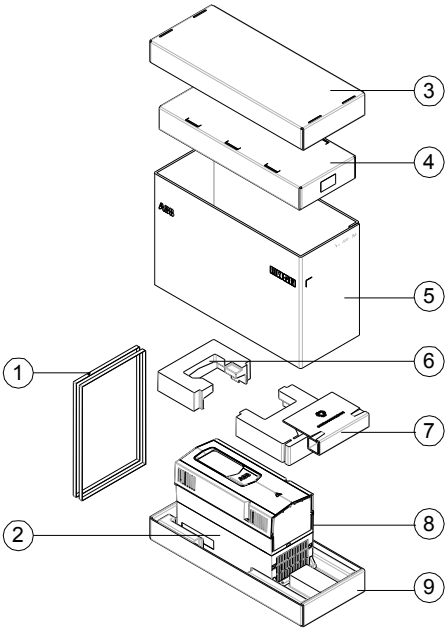

Item	Description	Item	Description
1	Straps	5	Cardboard sleeve
2	Printed manuals and quick guides, manuals CD and multilingual residual voltage warning stickers	6…7	Cushions
3	Cardboard cover	8	Drive with factory installed options
4	Flange mounting kit	9	Cardboard tray

To unpack:

- Cut the straps (1).
- Remove the top cardboard cover (3), lift the flange mounting kit (4), and remove the cushions (6…7).
- Lift the cardboard sleeve (5).
- Lift the drive (8).

Frames R6 to R9

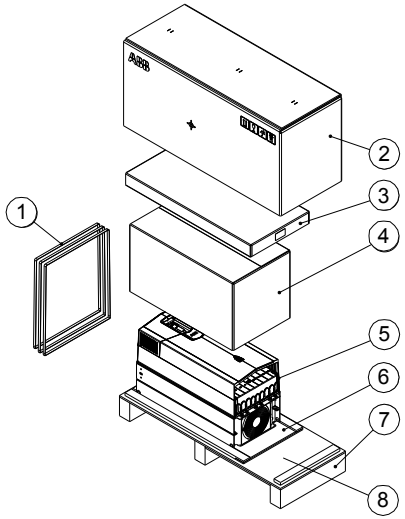

Item	Description	Item	Description
1	Straps	5	Drive with factory installed options
2	Cardboard cover	6	Pallet stopper
3	Flange mounting kit	7	Pallet tray
4	Cardboard sleeve	8	Printed manuals and quick guides, manuals CD and multilingual residual voltage warning stickers

To unpack:

- Cut the straps (1).
- Remove the cardboard cover (2).
- Lift the flange mounting kit (3).
- Remove the cardboard sleeve (4).
- Attach lifting hooks to the lifting eyes of the drive (5). Lift the drive with a hoist.

Flange mounting kit package contents

The illustrations show the layout of the flange mounting kit packages. Examine that all items are present and there are no signs of damage.

Frames R1 to R3

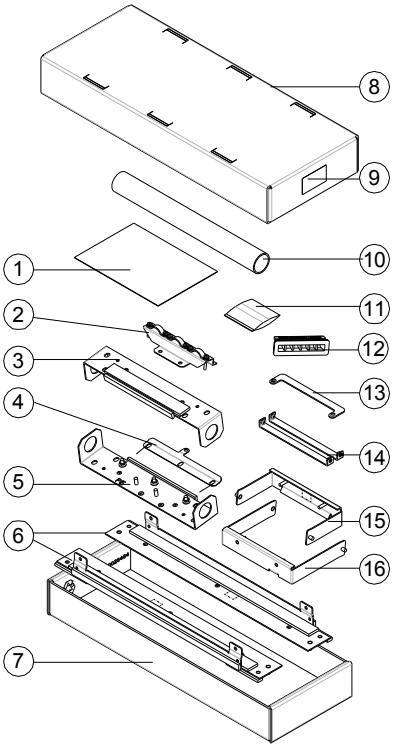

1	Quick guide
2	Cable shelf
3	Top bracket
4	Grounding plate
5	Bottom bracket
6	Side brackets
7	Cardboard tray
8	Top cardboard cover
9	Option kit package label
10	Mounting template
11	Screw package: • M5 nut (4 pcs) • M6 nut (17 pcs) * • M5×20 screw (4 pcs) • M6×25 screw (10 pcs) • M5×25 T20 screw (1 pcs) • M5×50 T20 (2 pcs)
12	Sealing plug
13	Sealing plate
14	Tightening brackets
15	Bottom U-bracket
16	Top U-bracket

* The delivery does not include the Rivet or Kalei nuts for the M6 screws.

Frames R4 to R5

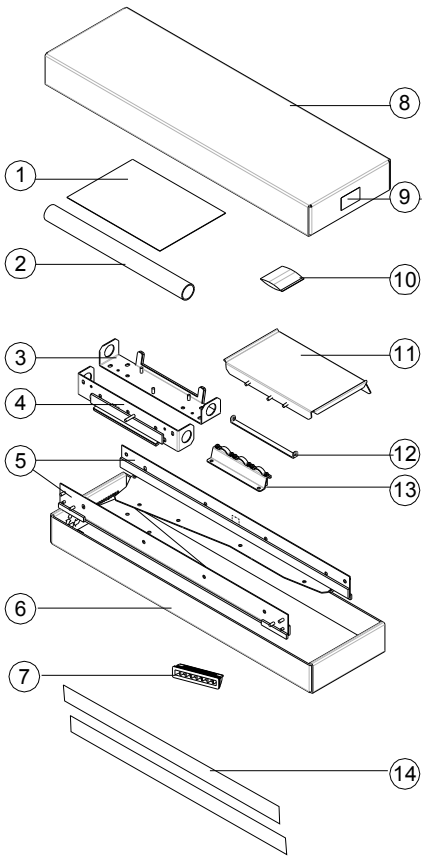

1	Quick guide
2	Mounting template
3	Bottom bracket
4	Top bracket
5	Side brackets
6	Cardboard tray
7	Sealing plug
8	Top cardboard cover
9	Option kit package label
10	Screw package: • M6 nut (14 pcs) * • M6×20 screw (2 pcs) • M6×25 screw (13 pcs) • M6×10 T30 screw (R4: 6 pcs; R5: 8 pcs)
11	Hood (required for UL type 12)
12	Tightening bracket
13	Cable shelf
14	Sealing tapes

* The delivery does not include the Rivet or Kalei nuts for the M6 screws.

Frames R6 to R9

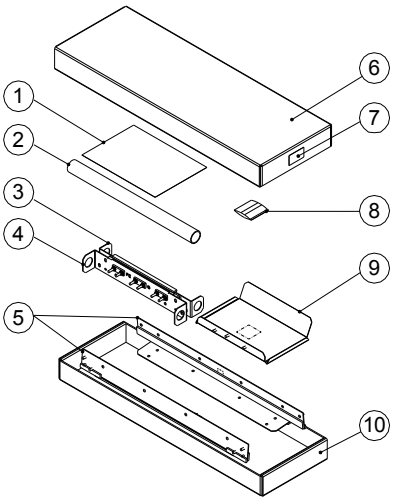

1	Quick guide
2	Mounting template
3	Top bracket
4	Bottom bracket
5	Side brackets
6	Top cardboard cover
7	Option kit package label
8	Screw package: • M6 nut (11 pcs) * • M6×10 T30 (12 pcs) • M6×25 T25 (R6…R8: 16 pcs, R9: 18 pcs)
9	Hood (required for UL type 12)
10	Cardboard tray

* The delivery does not include the Rivet or Kalei nuts for the M6 screws.

Mounting template

The flange mounting kit package includes a template in actual size for drilling the mounting holes and cutting the holes in the mounting plate.

An example template is shown below.

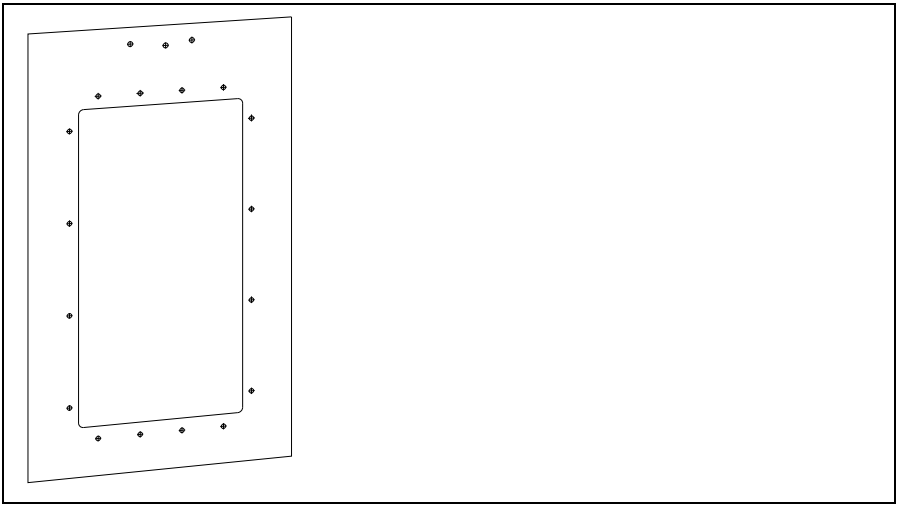

Installing the drive

Free space requirements

The flange-mounted drives can be installed side by side. For free space requirements above and below the drives, see the table.

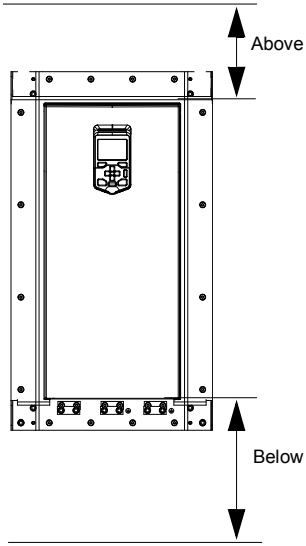

ACS880-01			
Above		Below	
mm	in	mm	in
-	-	-	-
200	7.87	300	11.81
200	7.87	300	11.81
200	7.87	300	11.81
200	7.87	300	11.81
200	7.87	300	11.81
200	7.87	300	11.81
200	7.87	300	11.81
200	7.87	300	11.81
200	7.87	300	11.81

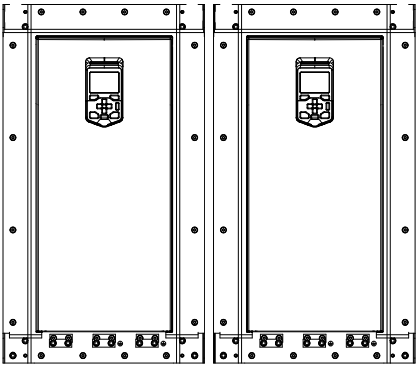

Installing drives above one another

Make sure that the outlet cooling air flows away from the drive above.

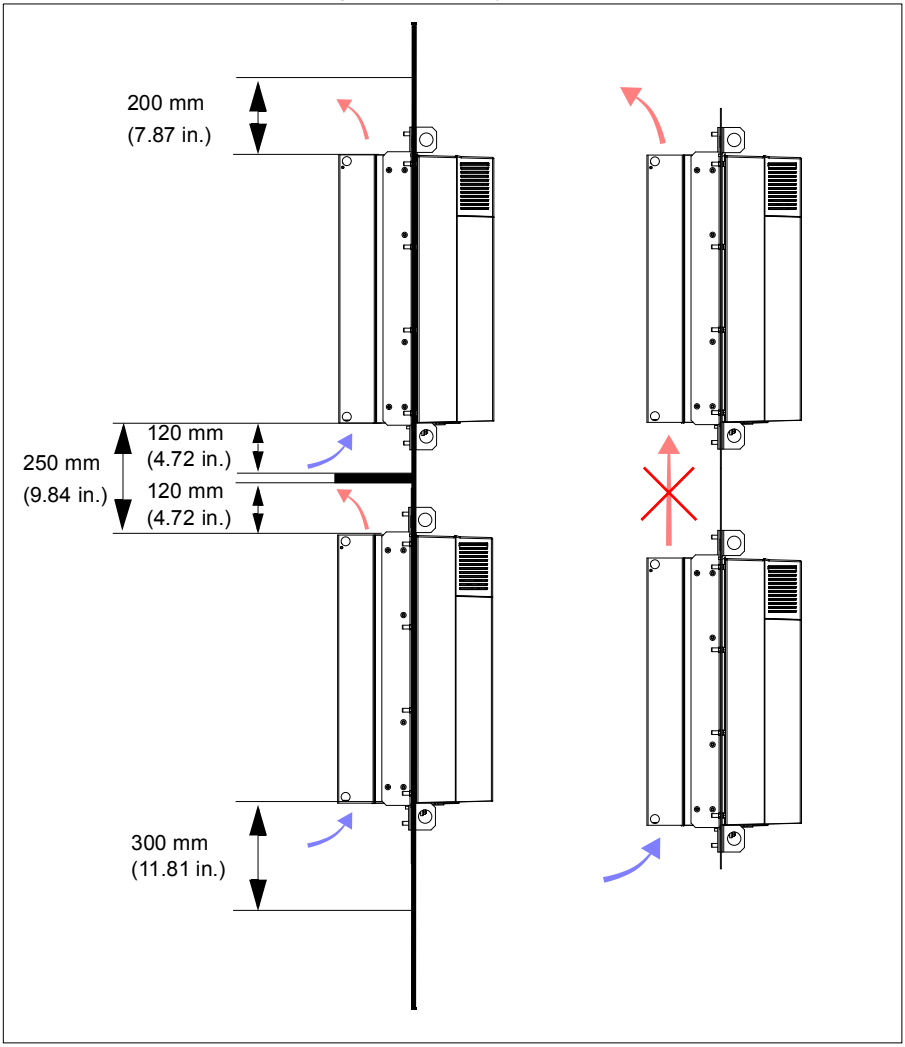

Installation procedure

Frames R1 to R3

1. To remove the fan assembly, push the retaining clip with a flat screwdriver. Lift the assembly up.

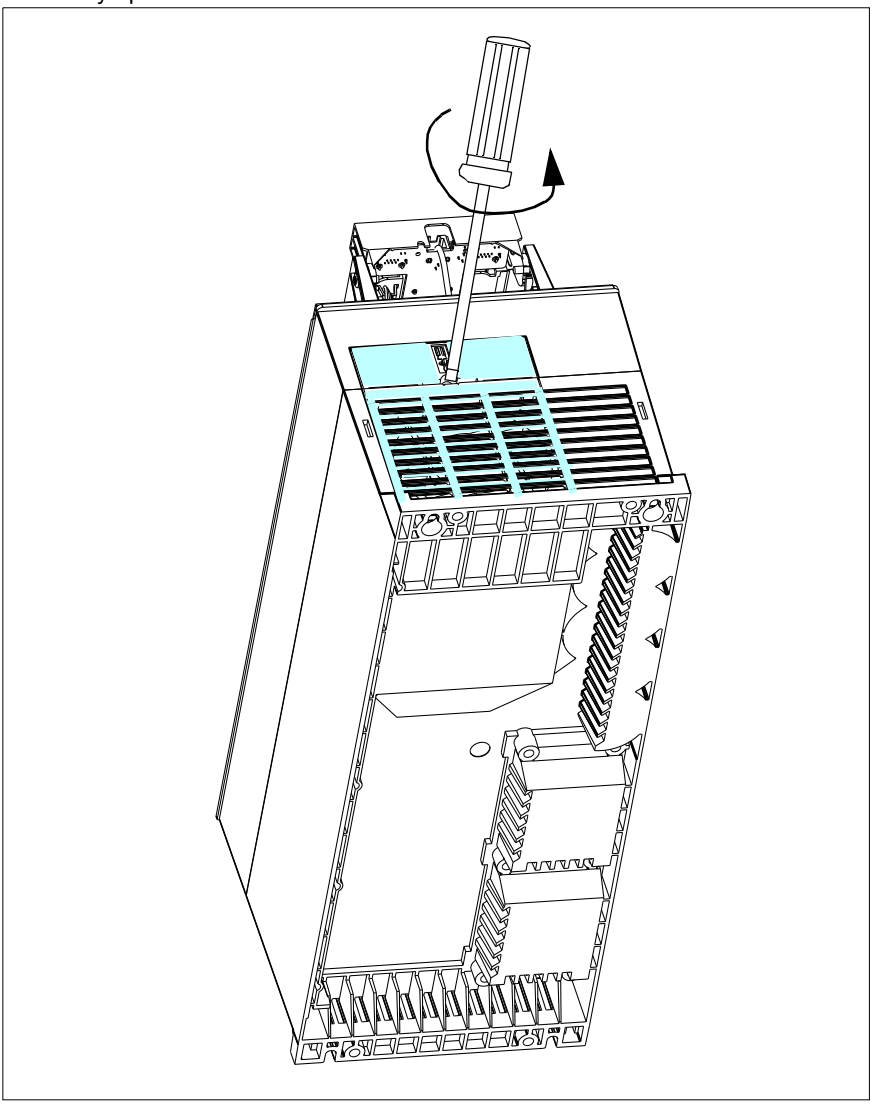

2. Insert the sealing plug to the hole shown in the figure.

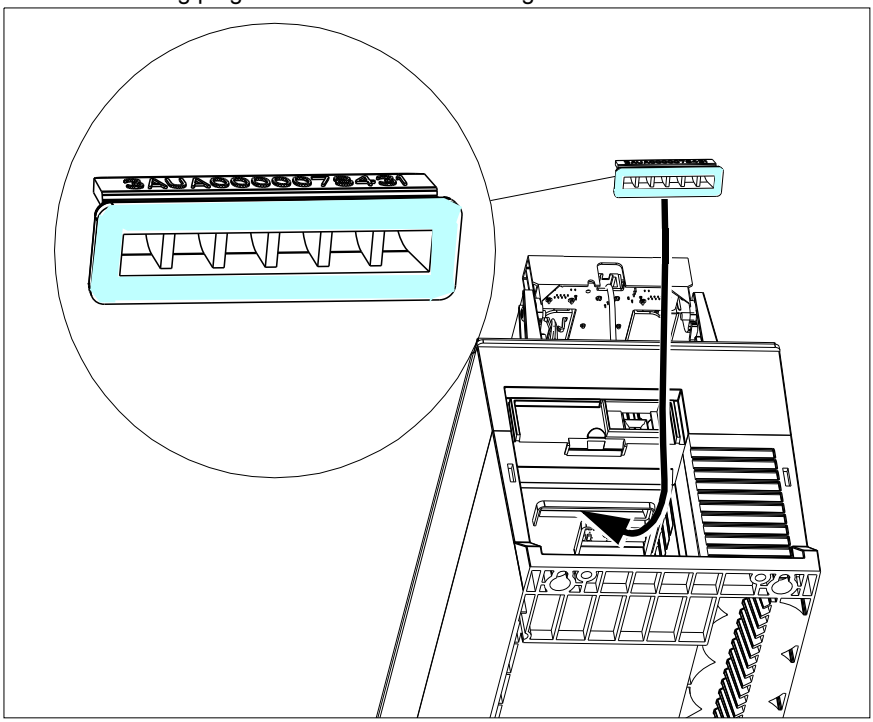

3. Reinstall the fan assembly in reverse order.

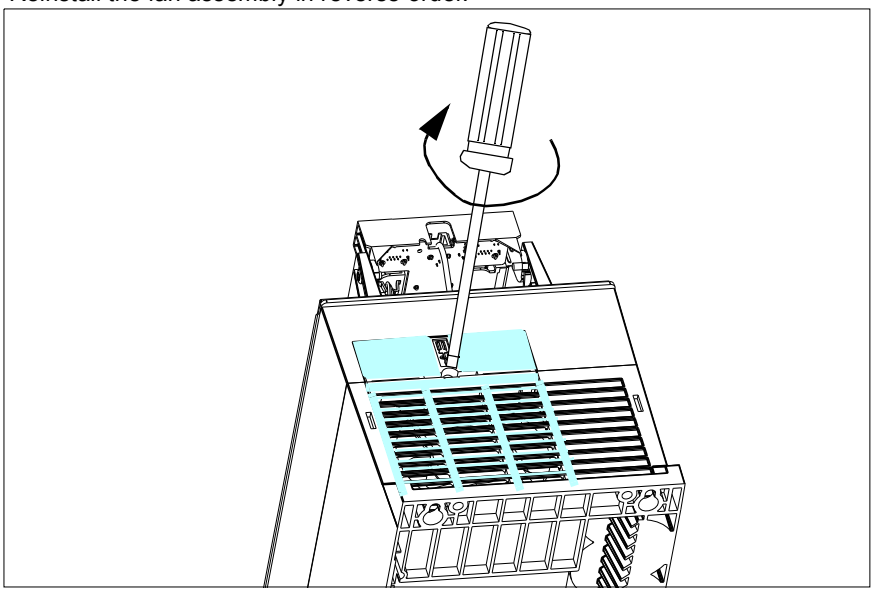

4. Attach the top and bottom U-brackets to the drive.

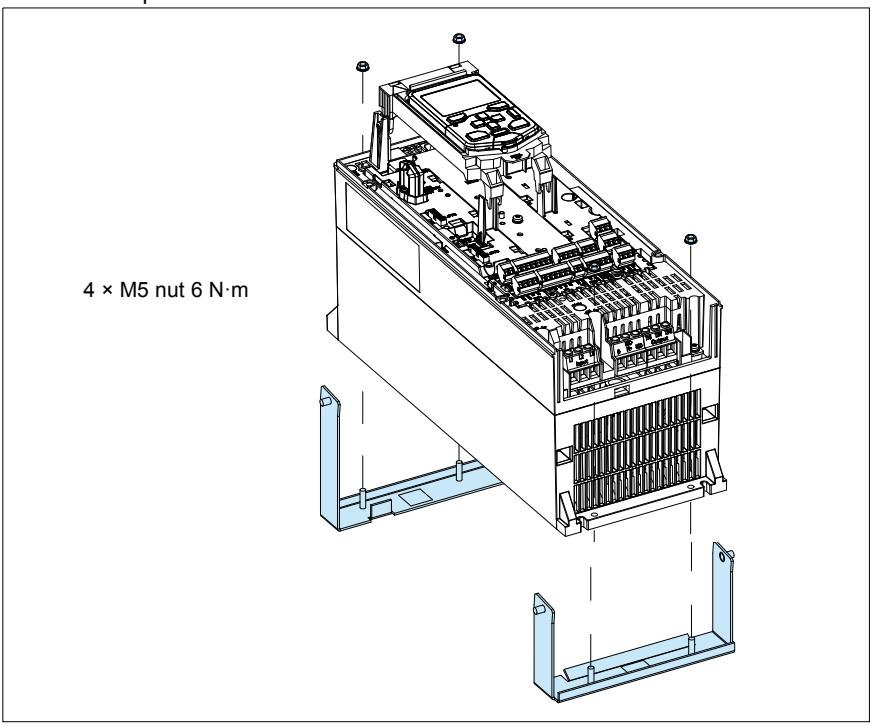

5. First attach the side brackets (a) to the top and bottom U-brackets with four M6 nuts. Then, attach the tightening brackets (b) to the both ends with four M5×20 screws. Last attach the sealing plate (c) to the bottom of the drive with two M5×50 screws T20.

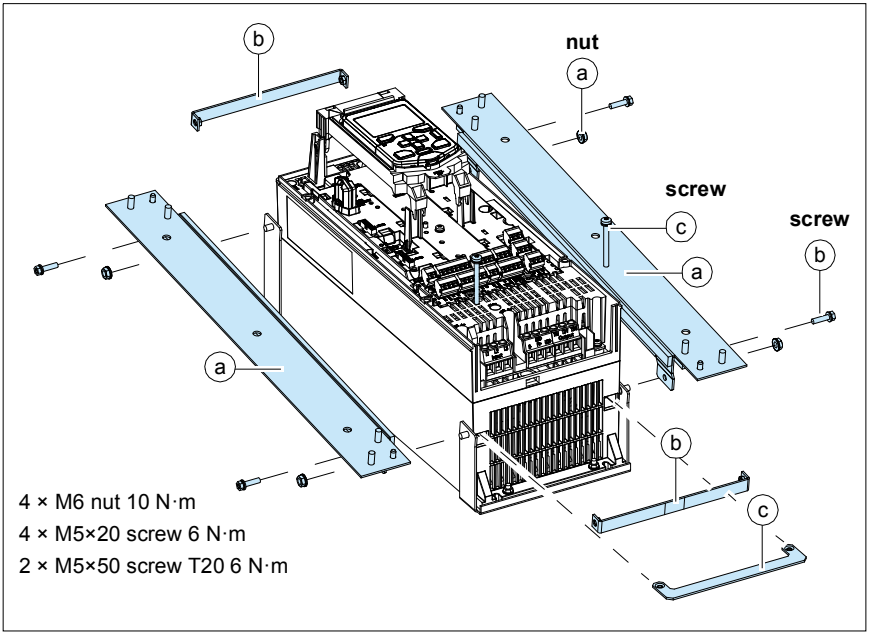

6. Attach the top and bottom brackets to the side brackets.

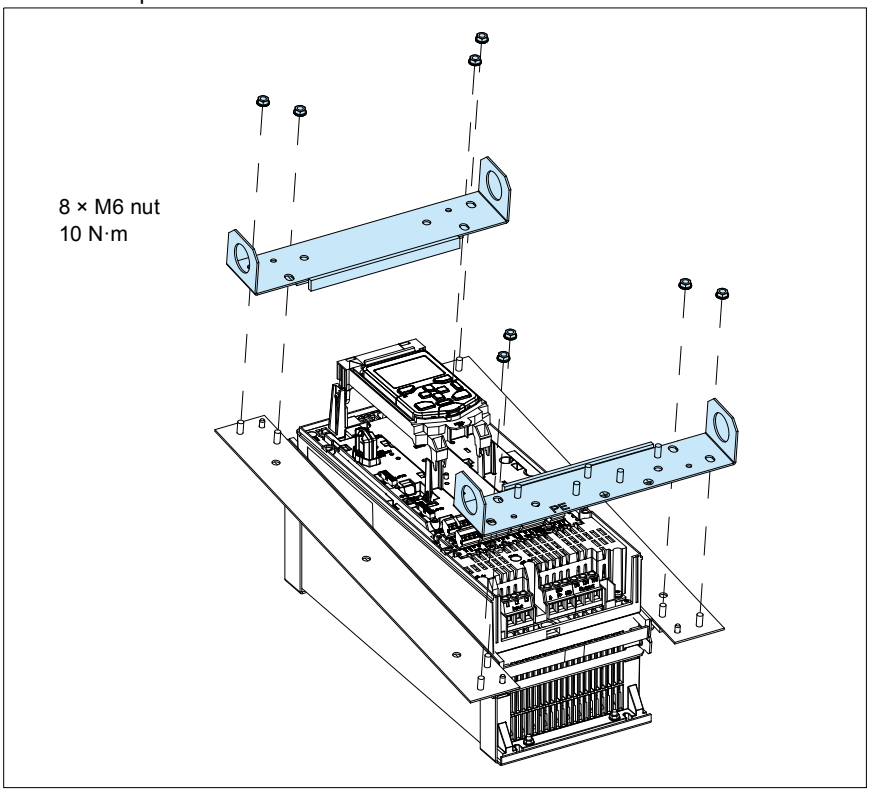

7. Push the grounding plate (d) to the alignment pins of the bottom bracket and fasten the plate to the drive with one M5×25 screw T20 and three M6 nuts.

   Then attach the cable shelf (e) to the bottom bracket with two M6 nuts.

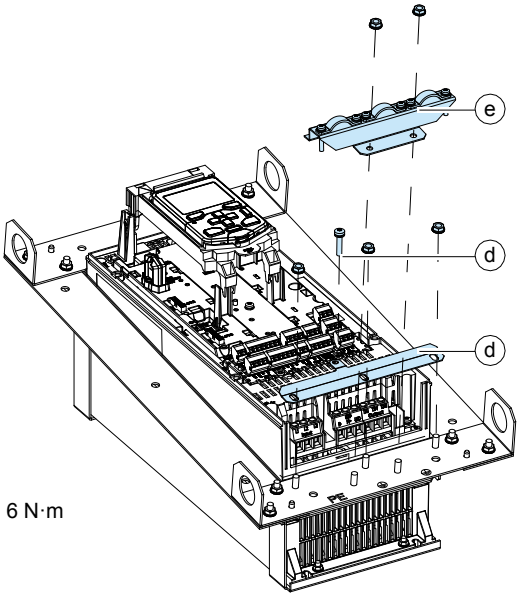

5 × M6 nut 10 N·m

1 × M5×25 screw T20 6 N·m

8. See chapter *Dimension drawings for ACS880-01* for the dimensions of the flange and the required opening in the mounting plate. Attach the mounting template from the flange mounting kit package onto the mounting plate.

   Make the opening and drill the holes for the mounting screws. Consider the hole size for the Rivet or Kalei nuts (not included in the delivery). Remove the mounting template.

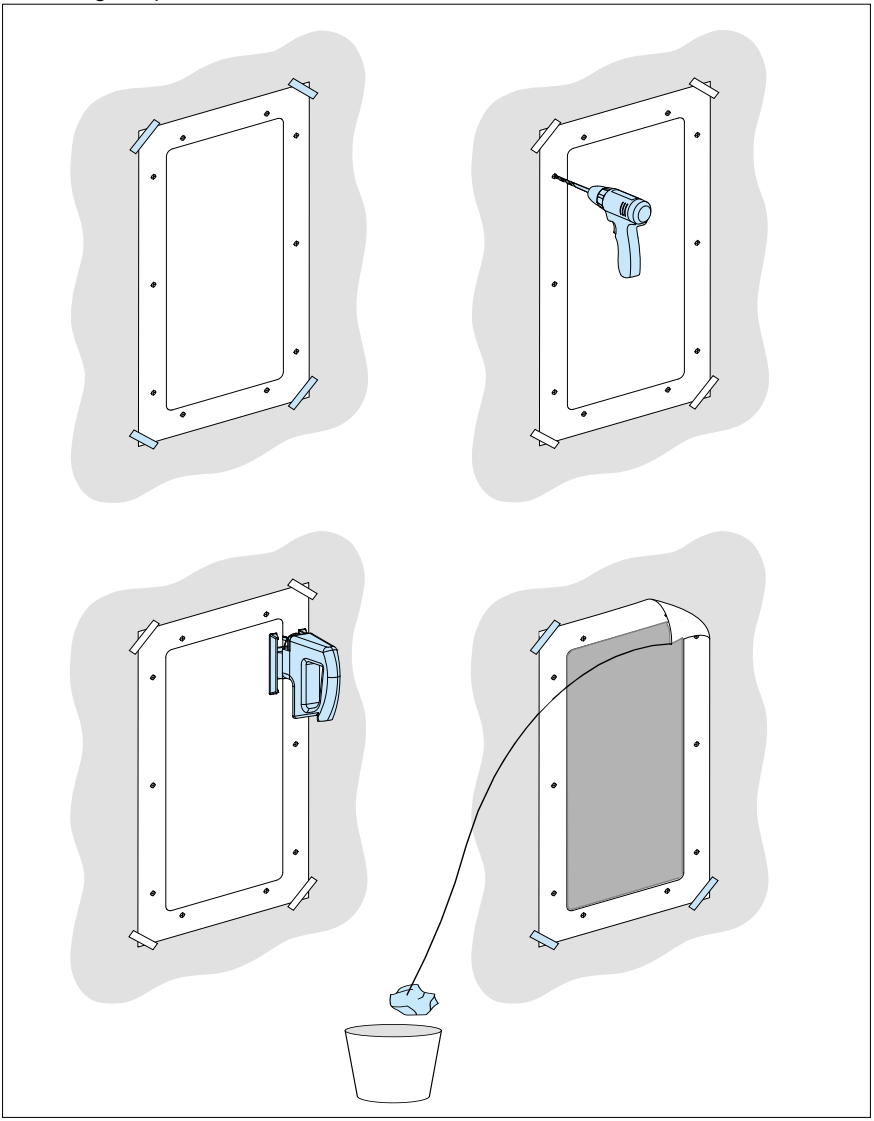

9. Attach chains to the drive lifting holes and lift the drive with a lifting device onto the opening in the mounting plate.

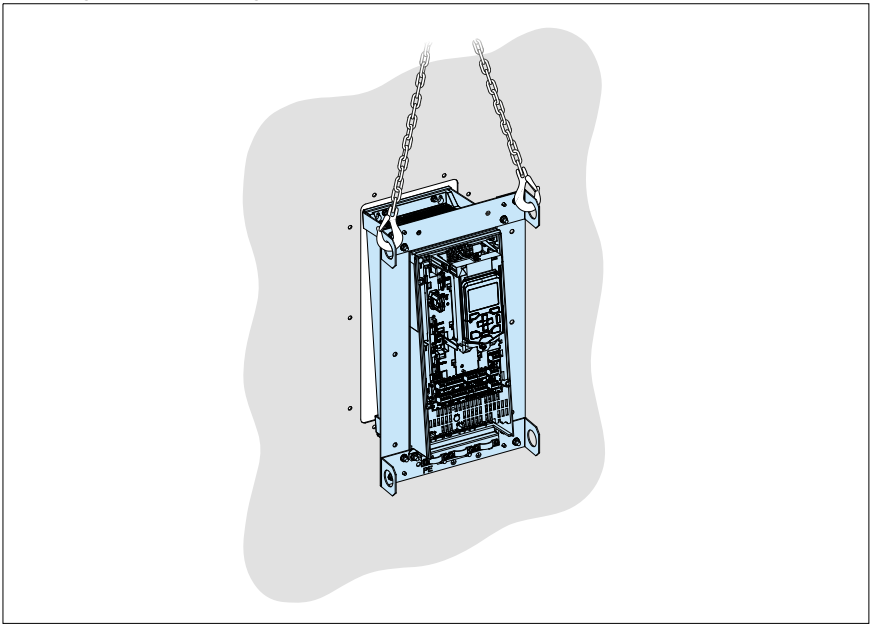

10. Attach the bottom bracket with one screw.

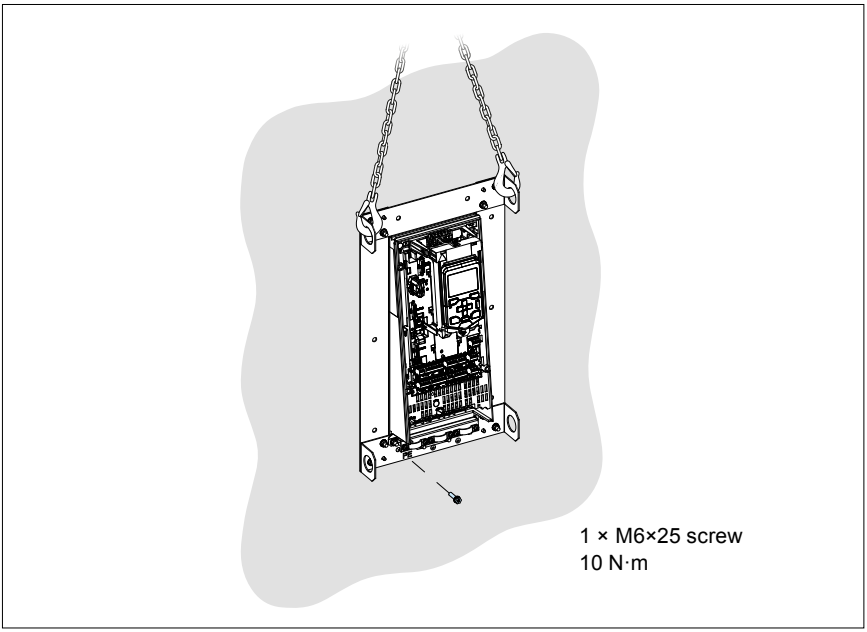

11. Attach the top bracket with one screw.

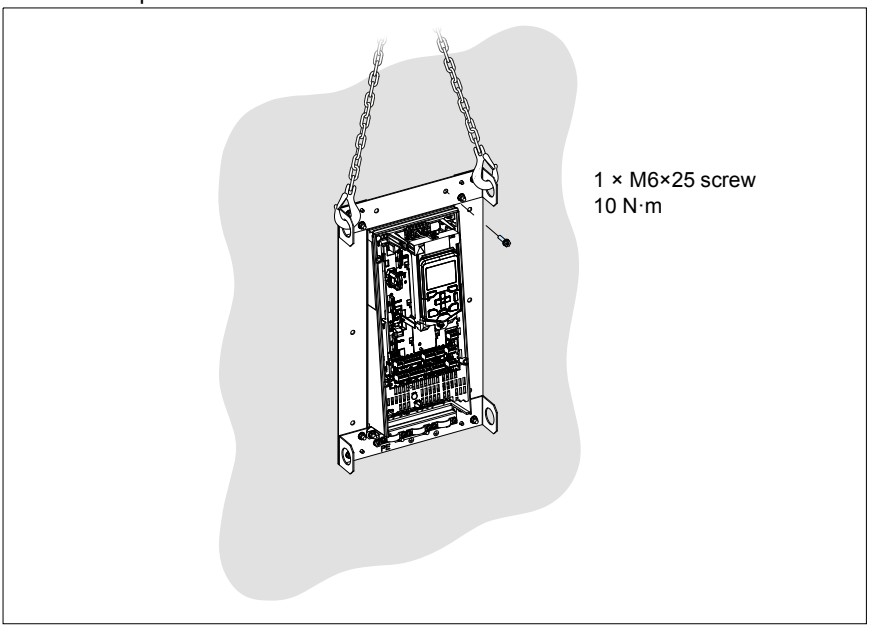

12. Attach the rest of the mounting screws. Remove the chains.

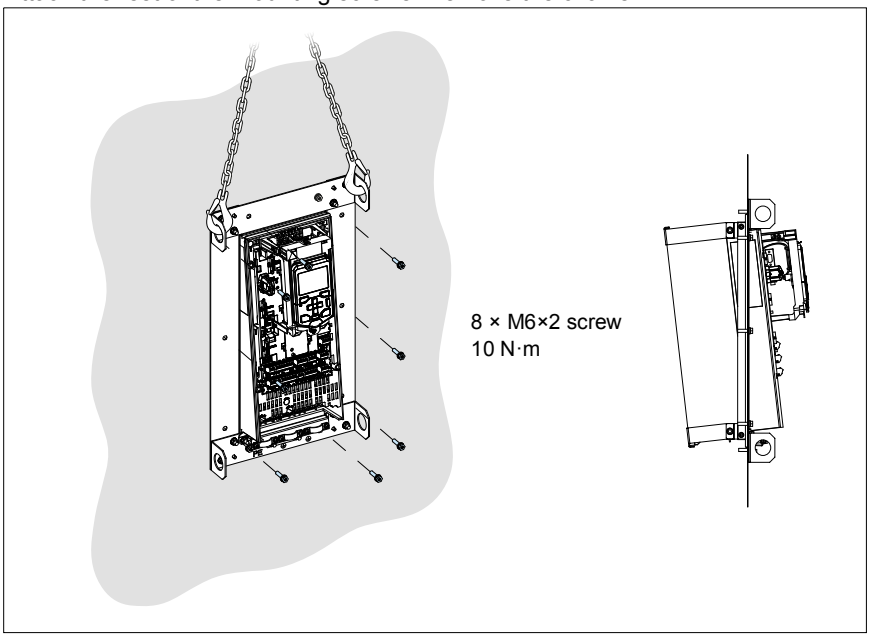

Frames R4 to R5

1. To remove the fan assembly, lift the fan mounting plate up from the front edge. Unplug the power supply wires. Lift the assembly off.

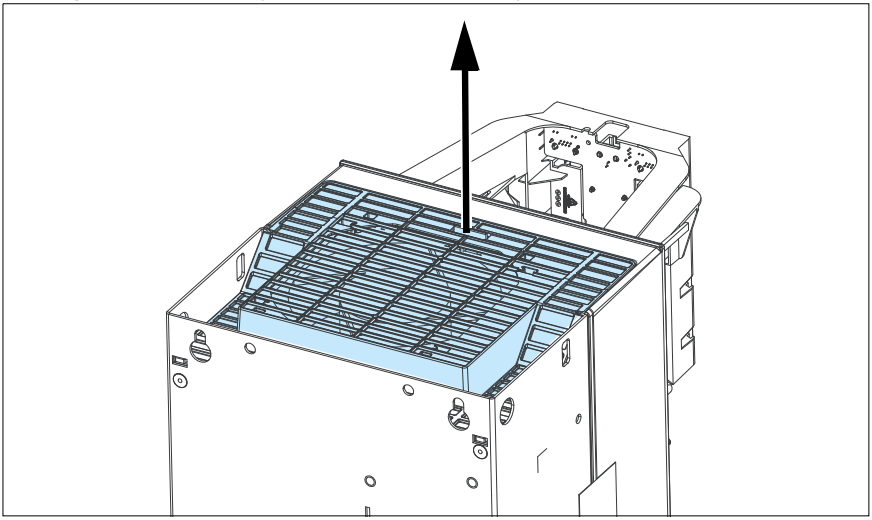

2. Insert the sealing plug to the hole shown in the figure.

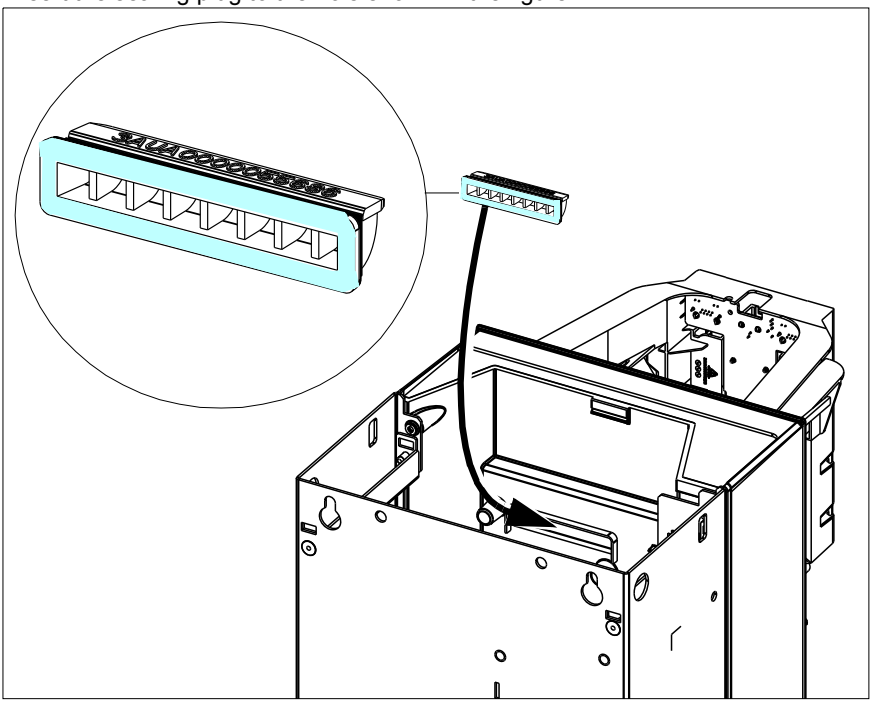

3. Reinstall the fan assembly in reverse order.

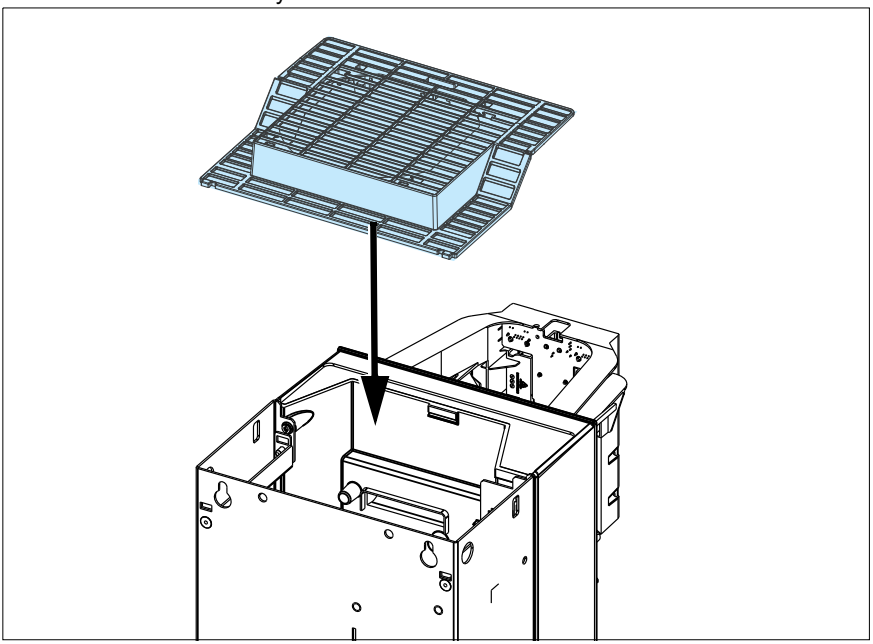

4. Attach the sealing tapes on **both** sides of the drive.

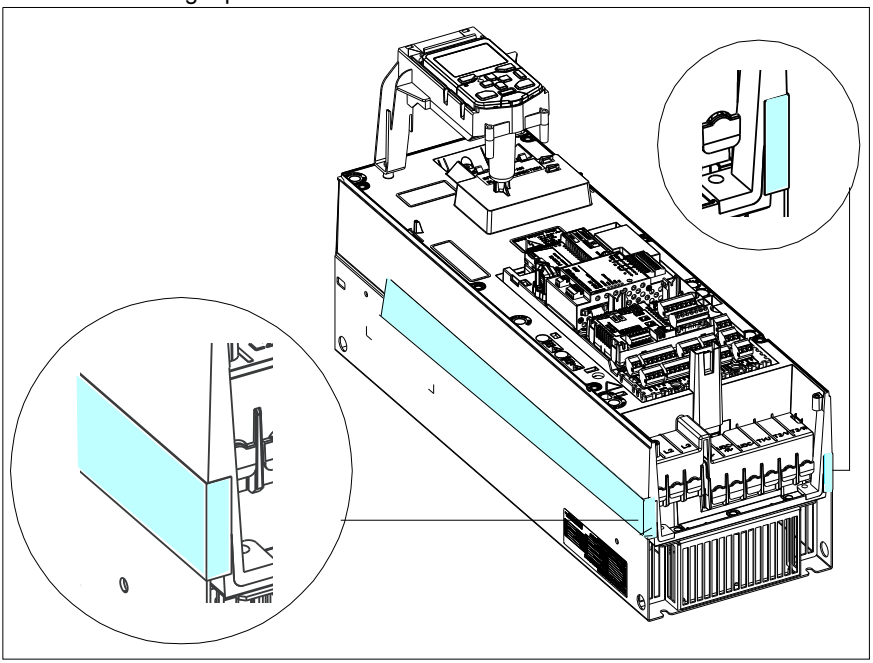

5. Attach the side brackets to the drive. Note that R4 has 6 screws for attaching the side brackets while R5 has 8 screws.

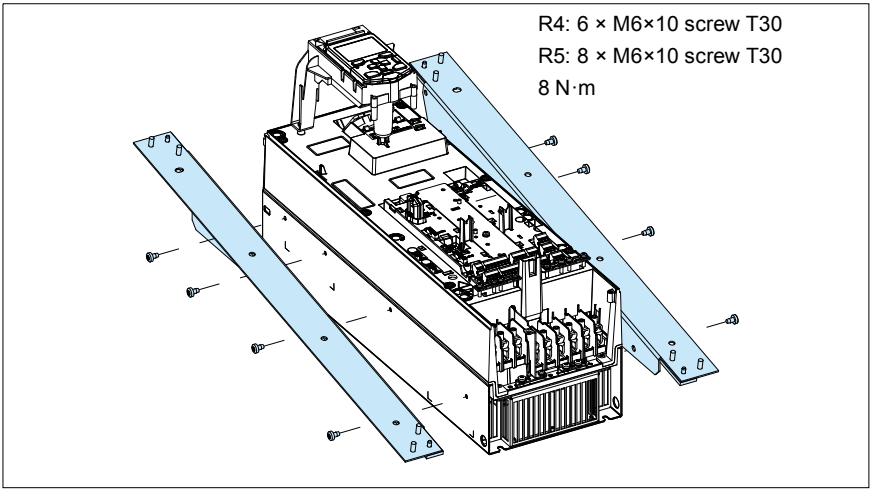

6. Attach the bottom bracket and the tightening bracket to the side brackets.

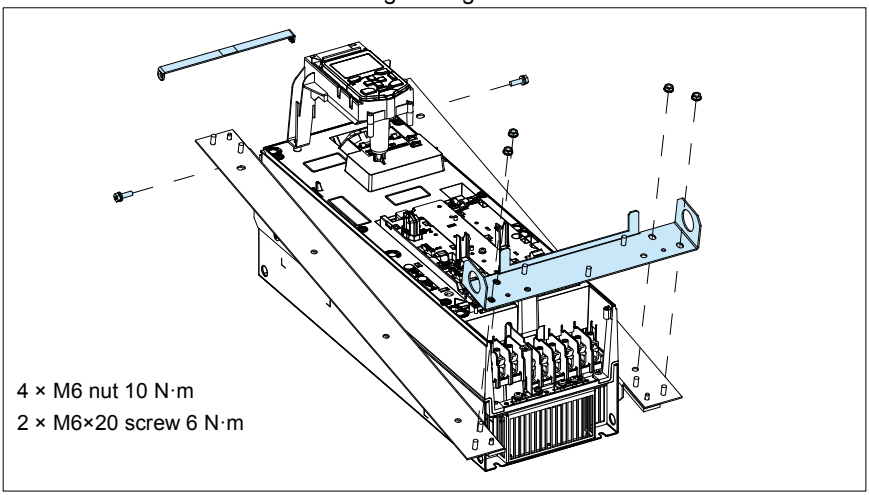

7. Attach the top bracket to the side brackets.

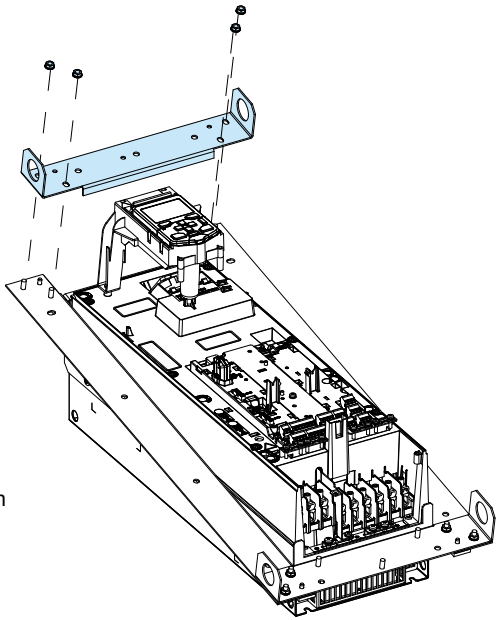

4 × M6 nut 10 N·m

8. Attach the cable shelf to the bottom bracket.

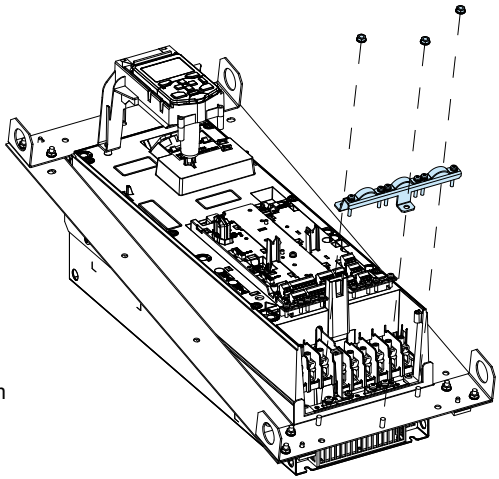

3 × M6 nut 10 N·m

9. See chapter *Dimension drawings for ACS880-01* for the dimensions of the flange and the required opening in the mounting plate. Attach the mounting template from the flange mounting kit package onto the mounting plate.

   Make the opening and drill the holes for the mounting screws. Consider the hole size for the Rivet or Kalei nuts (not included in the delivery). Remove the mounting template.

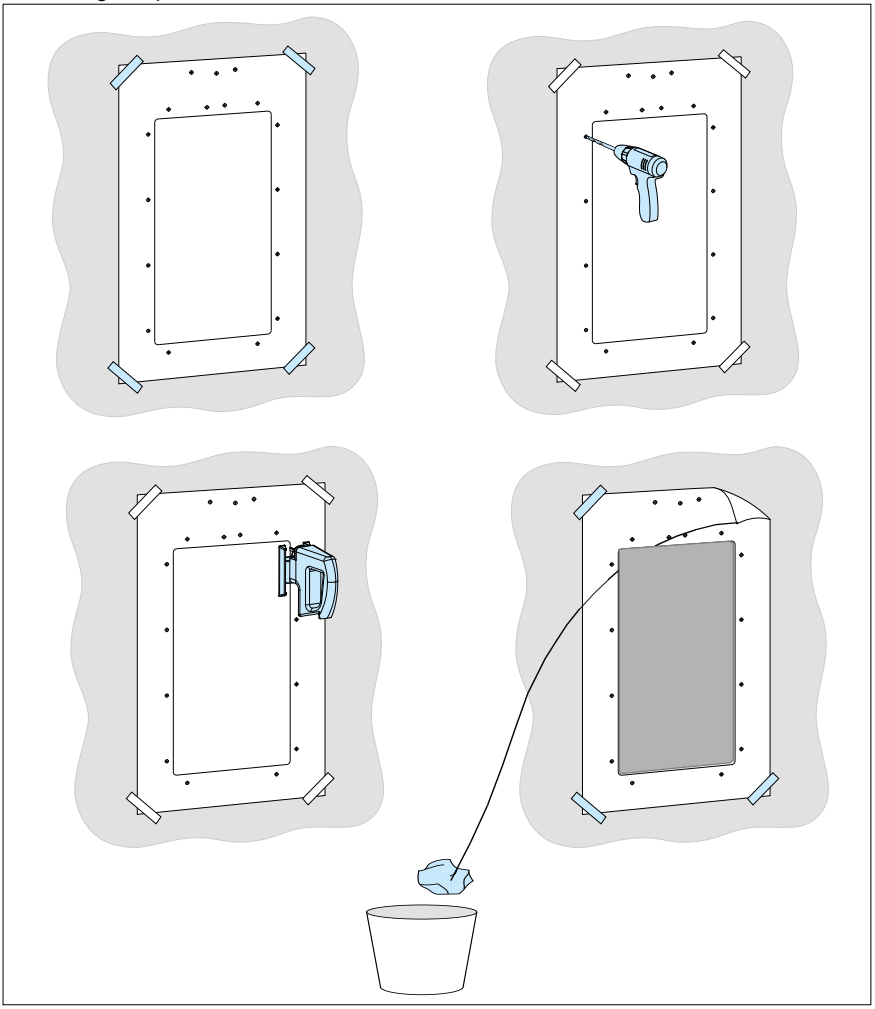

10. **UL Type 12 drives only:** Attach the hood to the cooling channel.

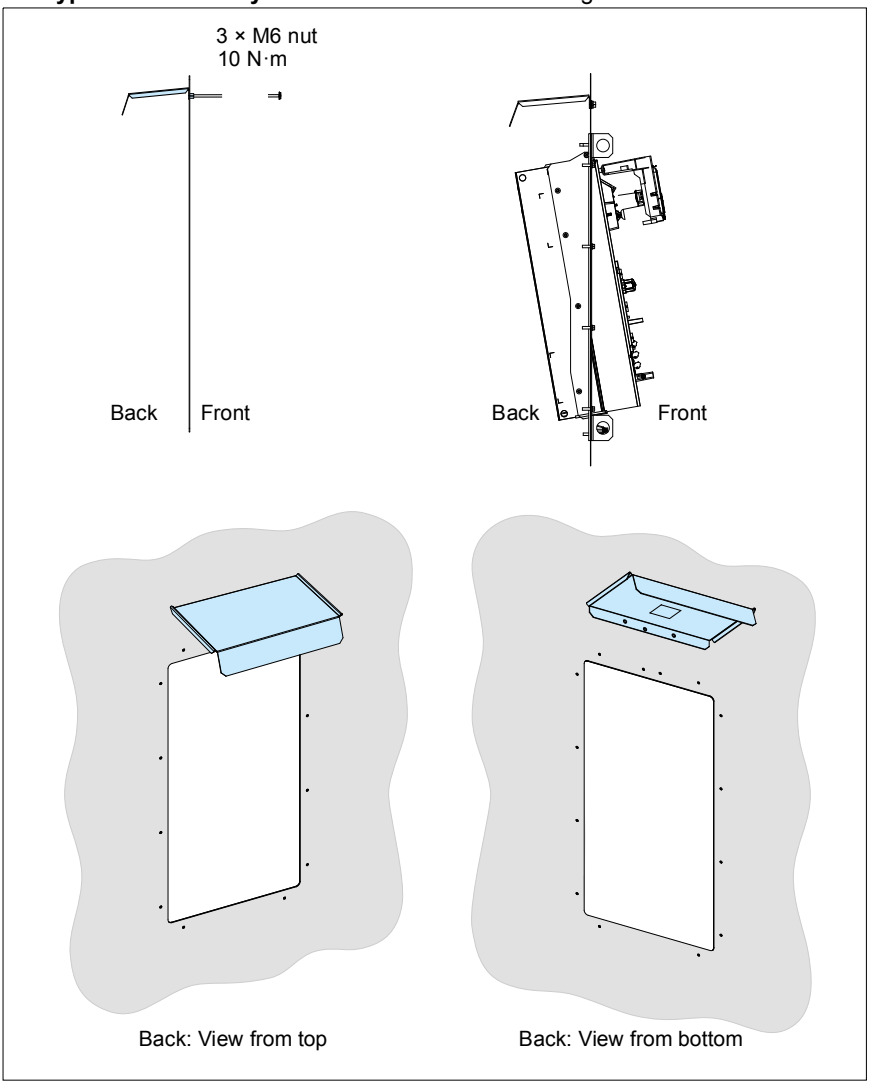

11. Attach the chains to the lifting holes of the flange and lift the drive with a lifting device onto the opening in the mounting plate.

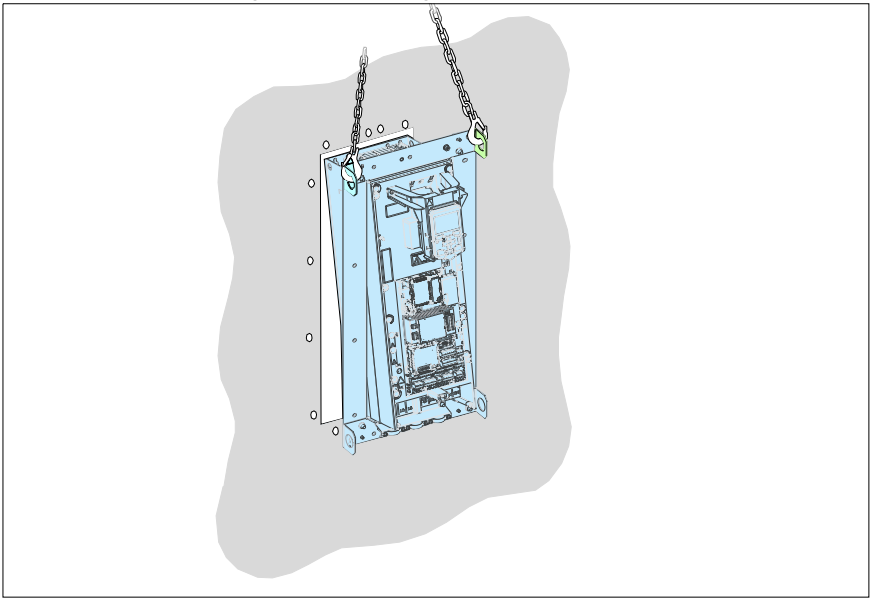

12. Attach the top bracket with one screw.

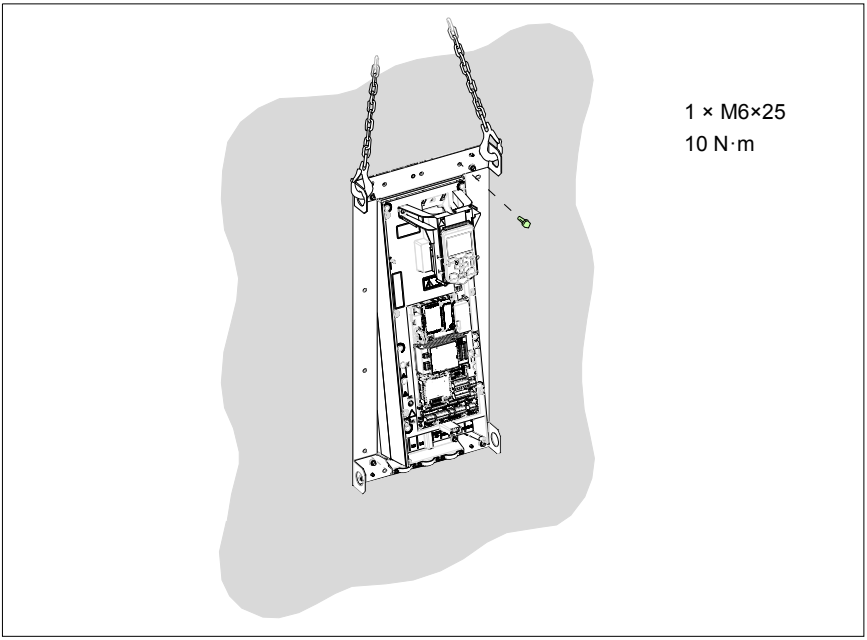

13. Attach the bottom bracket with one screw.

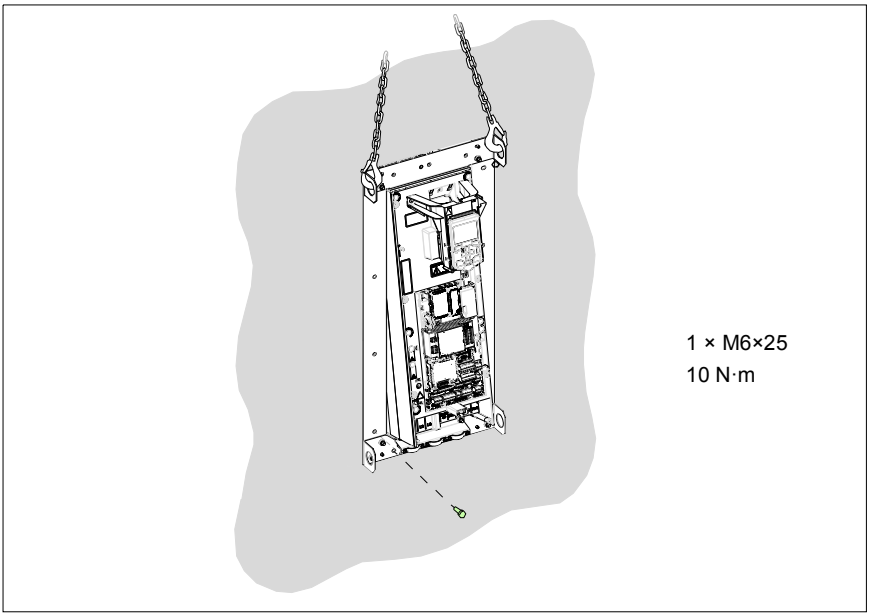

14. Attach the rest of the mounting screws. Remove the chains.

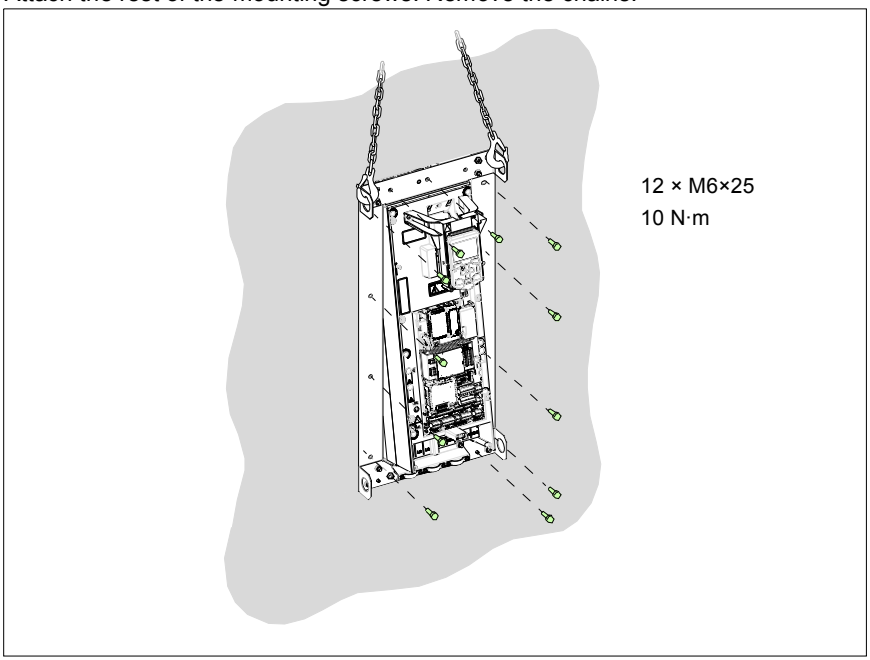

Frames R6 to R9

1. Attach the side brackets of the flange to the drive.

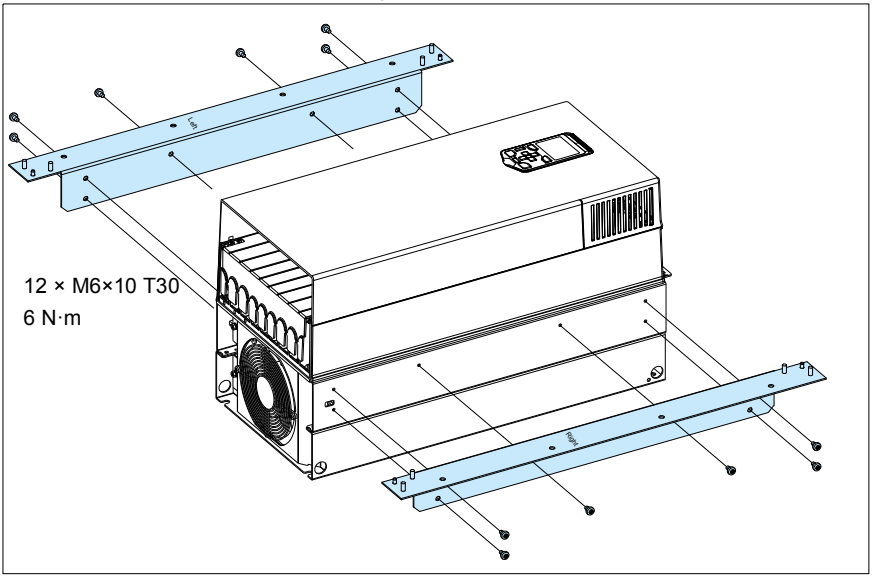

2. Attach the top and bottom brackets.

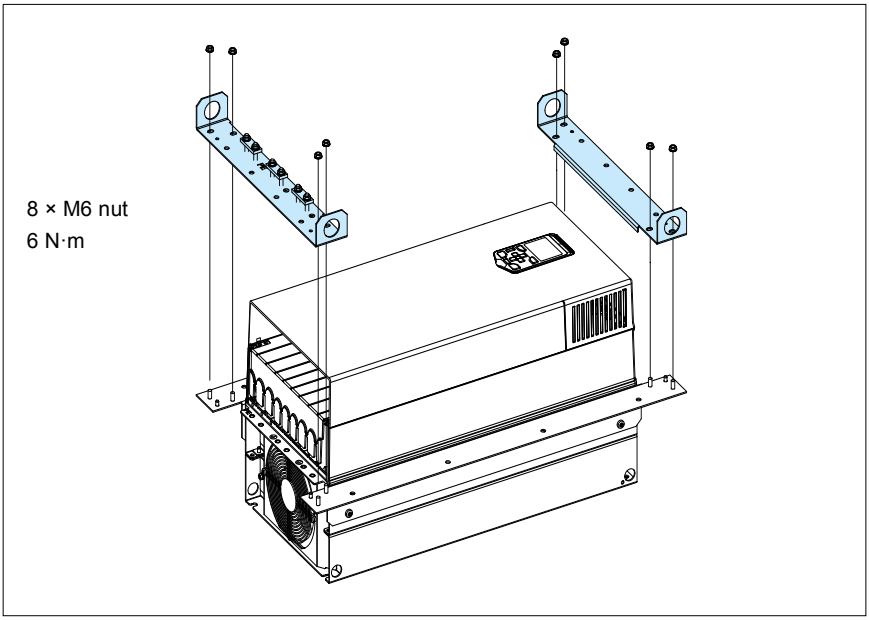

3. See chapter *Dimension drawings for ACS880-01* for the dimensions of the flange and the required opening in the mounting plate. Attach the mounting template from the flange mounting kit package onto the mounting plate.

   Make the opening and drill the holes for the mounting screws. Consider the hole size for the Rivet or Kalei nuts (not included in the delivery). Remove the mounting template.

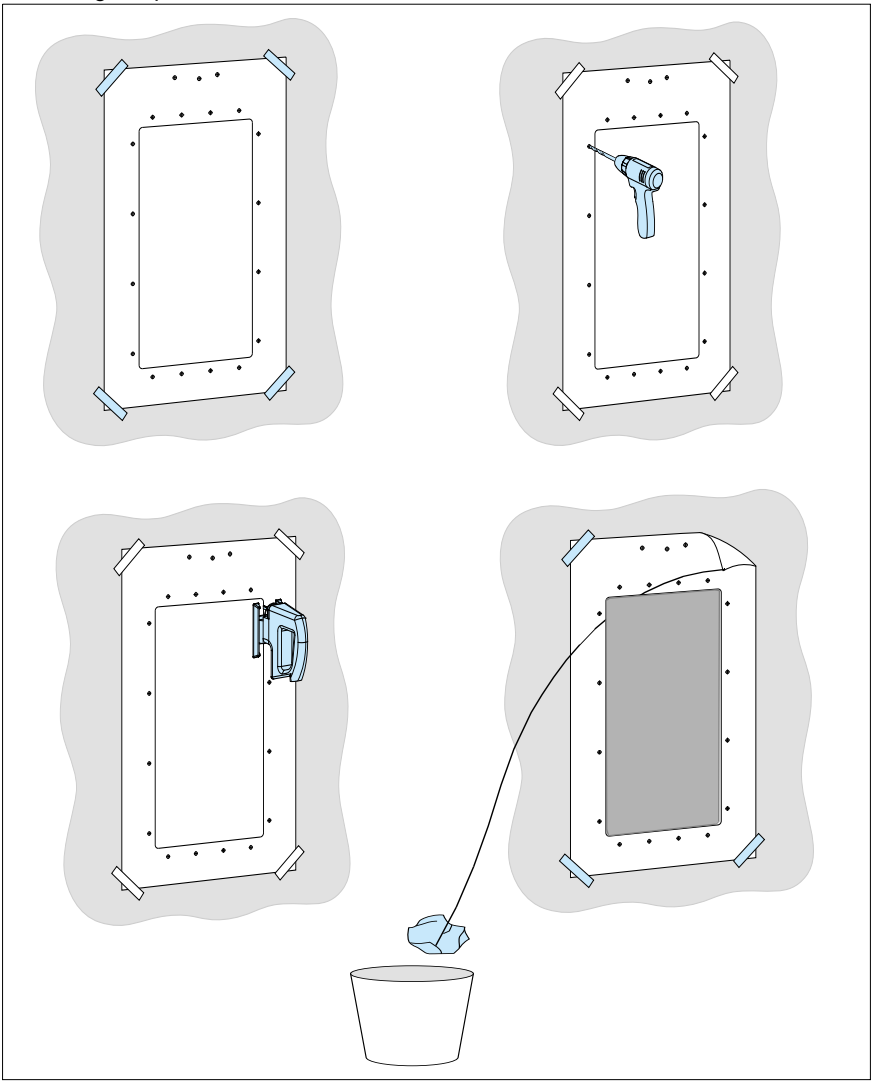

4. **UL Type 12 drives only:** Attach the hood to the cooling channel.

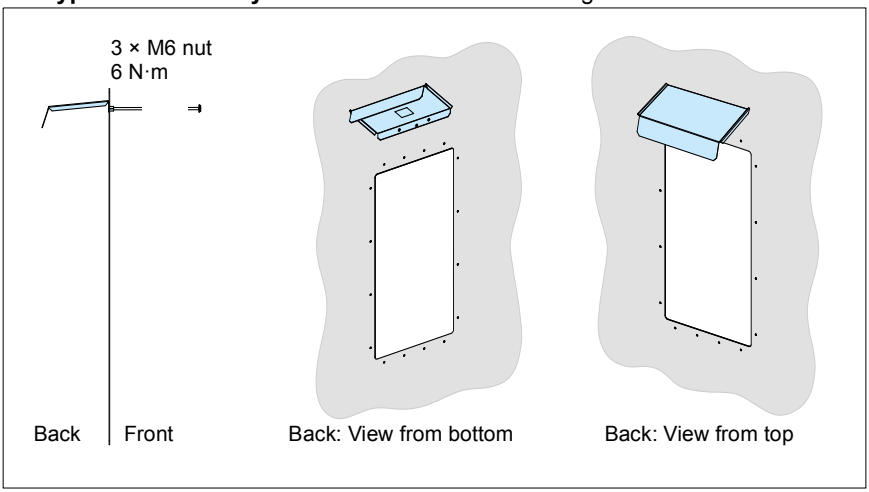

5. Attach the chains to the lifting holes of the flange and lift the drive with a lifting device onto the opening in the mounting plate.

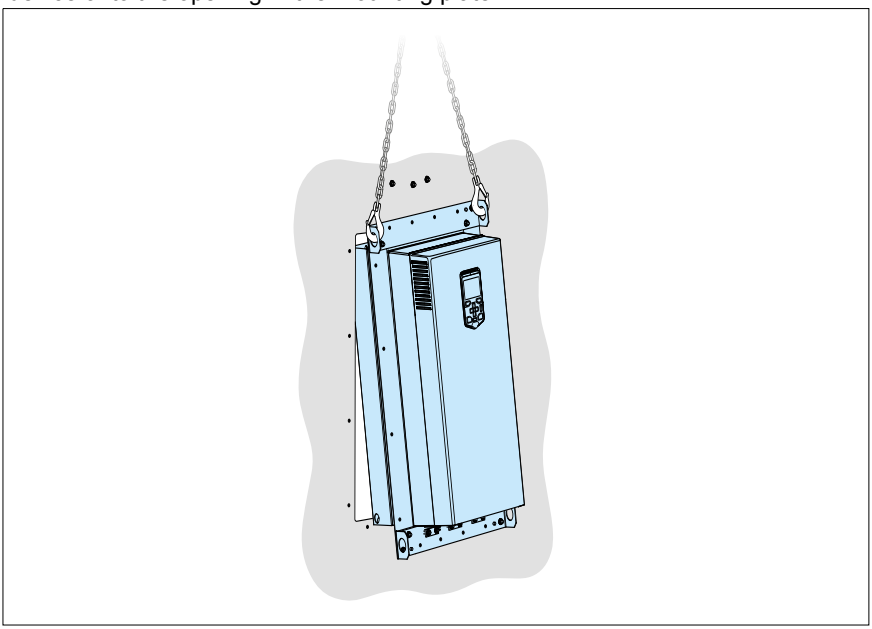

6. Attach the top bracket with one screw.

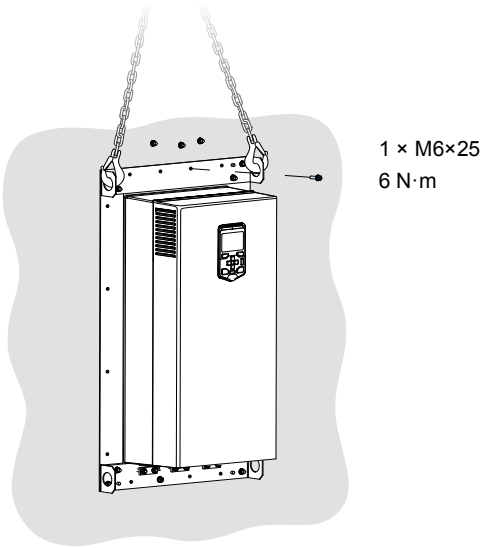

7. Attach the bottom bracket with one screw.

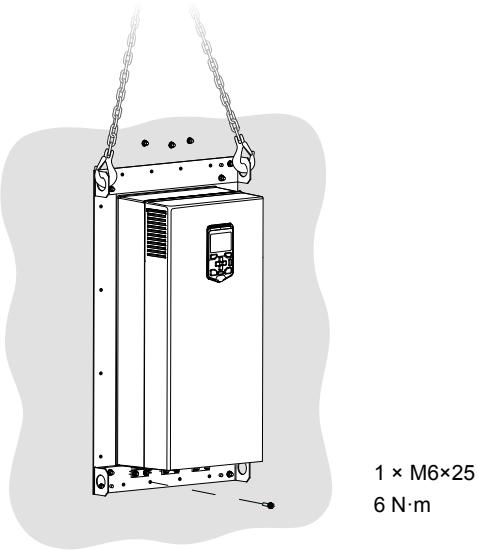

8. Attach the rest of the mounting screws. Remove the chains.

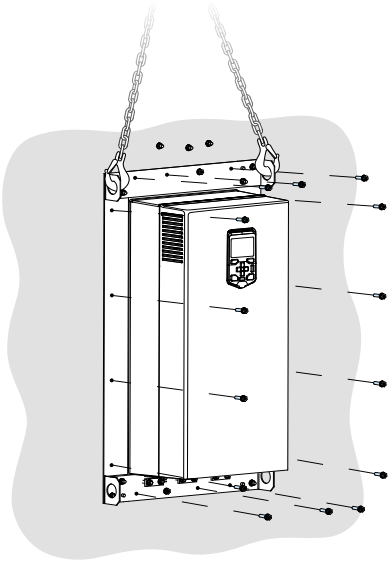

R6…R8:
14 × M6×25
6 N·m

R9:
16 × M6×25
6 N·m

4

Mechanical installation for ACS580-01, ACH580-01 and ACQ580-01

Contents of this chapter

This chapter describes how to install the drive with the flange mounting kit mechanically.

Safety

WARNING! For frame sizes R6 to R9: Use the lifting eyes of the drive when you lift the drive. Do not tilt the drive. The drive is heavy and its center of gravity is high. An overturning drive can cause physical injury.

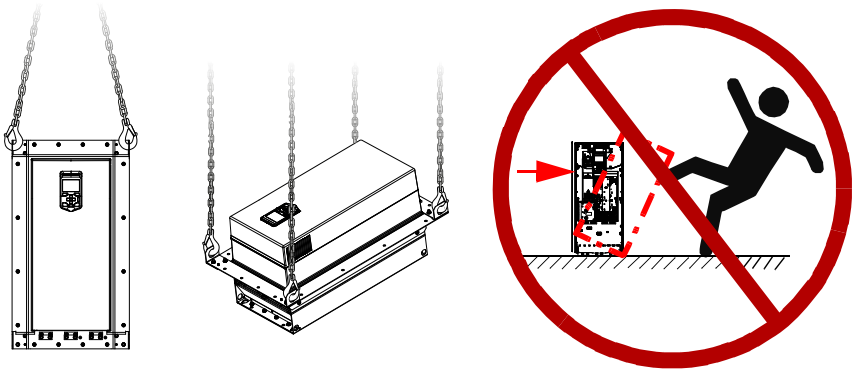

Examining the installation site

Make sure that the installation site agrees with these requirements:

- The installation site has sufficient ventilation to prevent overheating of the drive. See section *Losses, cooling data and noise* in the hardware manual for the required air flow in the cooling air channel and in the front part of the drive.
- The operation conditions of the drive agree with the specifications in section *Ambient conditions* in the hardware manual.
- The mounting plate is vertical, not flammable and strong enough to hold the weight of the drive module.
- The material below the installation is not flammable.
- There is enough free space above and below the drive for cooling air flow, service and maintenance. There is enough free space in front of the drive for operation, service and maintenance. See section *Free space requirements* on page *60* and *Dimensions, weights and free space requirements* in the hardware manual.

Additional requirements for cabinet installations

Make sure that the cooling air gratings of the drive will not be covered. Make sure that the required cooling air change is achieved. In a totally closed cabinet with no forced ventilation, a fan for circulating the air inside the cabinet may be needed.

Necessary tools

- Drill and drill bits
- Screwdriver

Moving the drive

Move the transport package by a pallet truck to the installation site.

Unpacking and examining the delivery

Transport package contents

The flange mounting kit package is either in the drive package, tied with straps onto the drive package or sent separately. Examine that all items are present and there are no signs of damage. Read the data on the type designation label of the drive to make sure that the drive is of the correct type.

Frames R0 to R4

The flange mounting kit package is tied onto the drive package.

To unpack:

- Cut the straps.
- Remove the flange mounting kit package. For the contents of the kit package, see *Frames R0 to R4* on page *55*.
- Open the drive cardboard box. For the contents of the drive package, see the relevant drive hardware manual.
- Lift the drive.

Frames R5

The flange mounting kit package is tied onto the drive package. The drive package is on a pallet.

To unpack:

- Cut the straps.
- Remove the flange mounting kit package. For the contents of the kit package, see *Frame R5* on page *58*.
- Remove the drive cardboard box and option box.
- Remove the cover protecting film. For the contents of the drive package, see the relevant drive hardware manual.
- Lift the drive.

Frames R6 to R9

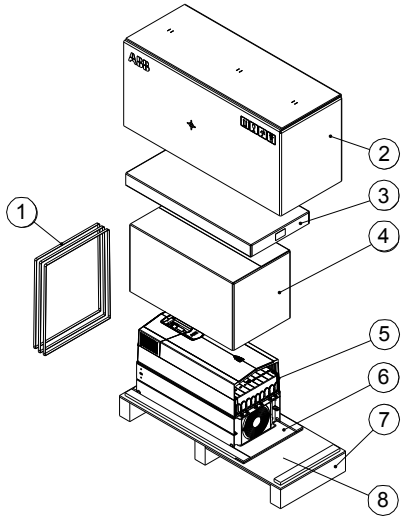

Item	Description	Item	Description
1	Straps	5	Drive with factory installed options
2	Cardboard cover	6	Pallet stopper
3	Flange mounting kit	7	Pallet tray
4	Cardboard sleeve	8	Printed manuals and quick guides, manuals CD and multilingual residual voltage warning stickers

To unpack:

- Cut the straps (1).
- Remove the cardboard cover (2).
- Lift the flange mounting kit (3).
- Remove the cardboard sleeve (4).
- Attach lifting hooks to the lifting eyes of the drive (5). Lift the drive with a hoist.

Flange mounting kit package contents

The drawings below show the layout of the flange mounting kit packages. Examine that all items are present and there are no signs of damage.

Frames R0 to R4

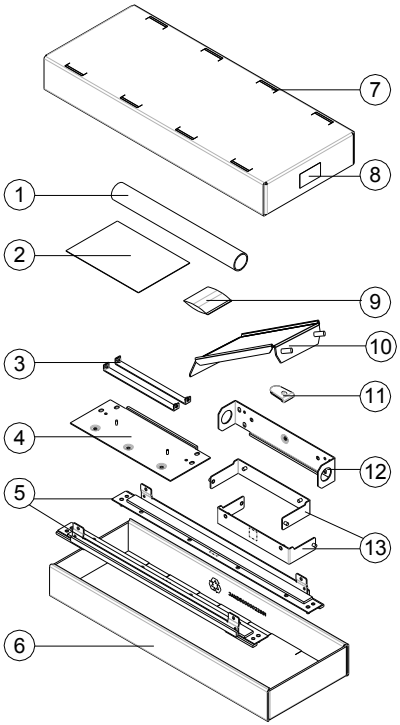

1	Mounting template
2	Quick guide
3	Tightening brackets
4	Bottom bracket
5	Side brackets
6	Cardboard tray
7	Top cardboard cover
8	Option kit package label
9	Screw package: • M4 nut (2 pcs) • M5x20 screw (4 pcs) • M6x25 screw (R0…R1: 10 pcs; R2: 12 pcs; R3: 14 pcs; R4: 16 pcs) * • M6 nut (R0…R2: 18 pcs; R3: 19 pcs; R4: 23 pcs)
10	Hood (required for UL type 12)
11	Sealing plug
12	Top bracket
13	Top and bottom U-brackets

* The delivery does not include the Rivet or Kalei nuts for the M6 screws.

Frame R5

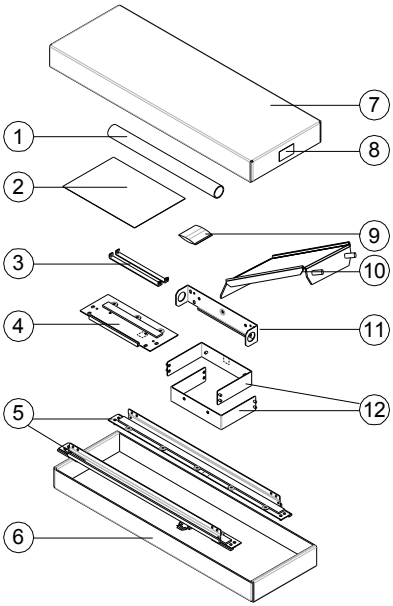

1	Mounting template
2	Quick guide
3	Tightening brackets
4	Bottom bracket
5	Side brackets
6	Cardboard tray
7	Top cardboard cover
8	Option kit package label
9	Screw package: • M4 nut (2 pcs) • M5x20 screw (4 pcs) • M6x25 screw (16 pcs) * • M6 nut (23 pcs)
10	Hood (required for UL type 12)
11	Top bracket
12	Top and bottom U-brackets

* The delivery does not include the Rivet or Kalei nuts for the M6 screws.

Frames R6 to R9

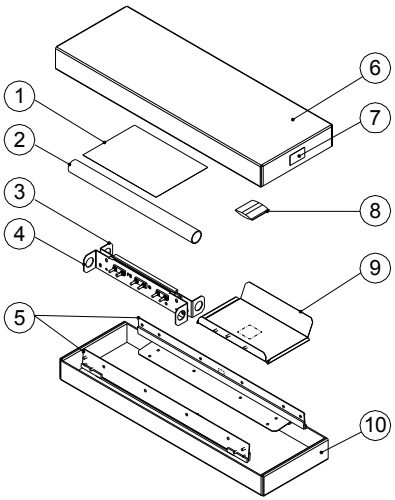

1	Quick guide
2	Mounting template
3	Top bracket
4	Bottom bracket
5	Side brackets
6	Top cardboard cover
7	Option kit package label
8	Screw package: • M6 nut (11 pcs) • M6×10 T30 (12 pcs) * • M6×25 T25 (R6…R8: 16 pcs, R9: 18 pcs)
9	Hood (required for UL type 12)
10	Cardboard tray

* The delivery does not include the Rivet or Kalei nuts for the M6 screws.

Mounting template

The flange mounting kit package includes a template in actual size for drilling the attaching holes and cutting the holes in the mounting plate.

An example template is shown below.

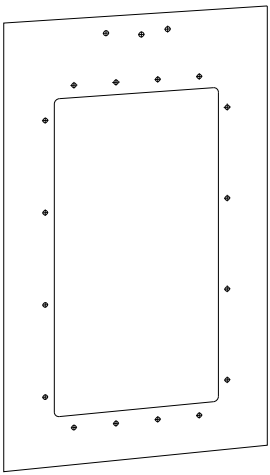

Installing the drive

Free space requirements

The flange-mounted drives can be installed side by side. For free space requirements above and below the drives, see the table.

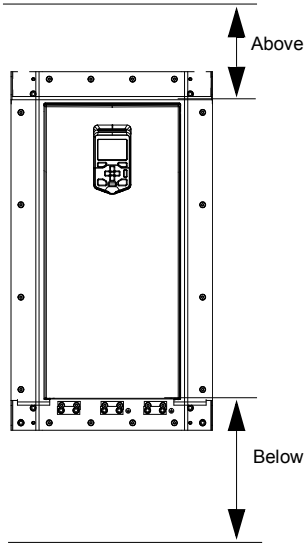

ACX580-01				
	Above		Below	
	mm	in	mm	in
R0	100	3.94	200	7.87
R1	100	3.94	200	7.87
R2	100	3.94	200	7.87
R3	115	4.53	200	7.87
R4	115	4.53	200	7.87
R5	115	4.53	200	7.87
R6	200	7.87	300	11.81
R7	200	7.87	300	11.81
R8	200	7.87	300	11.81
R9	200	7.87	300	11.81

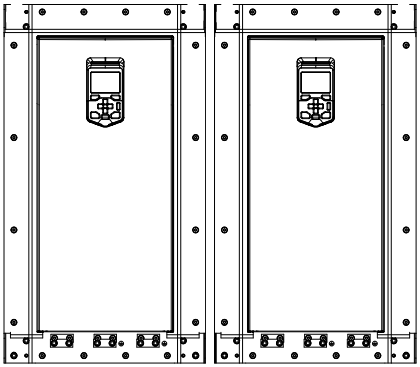

Installing drives above one another

Make sure that the outlet cooling air flows away from the drive above.

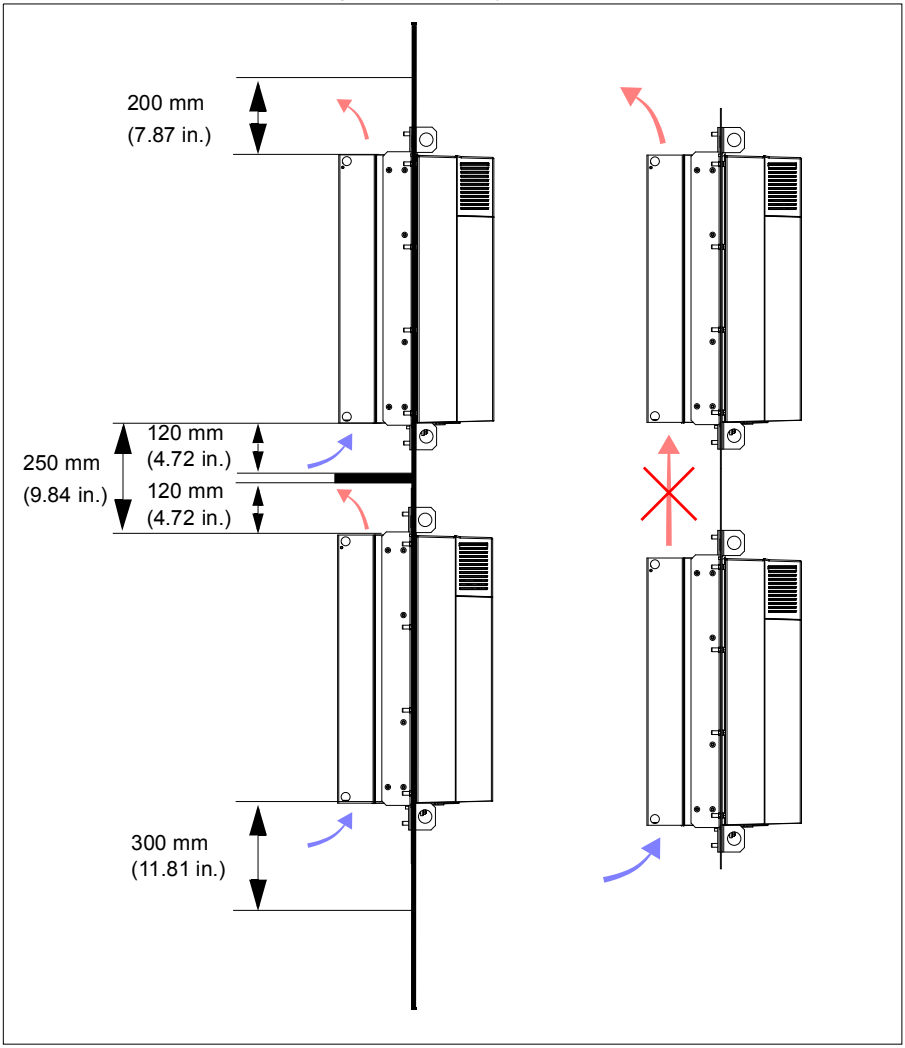

Installation procedure

Frames R0 to R5

1. **Frames R0…R4:** To remove the fan assembly, push the retaining clip with a flat screwdriver. Lift the assembly up. See also steps for IP21 on page *66*.

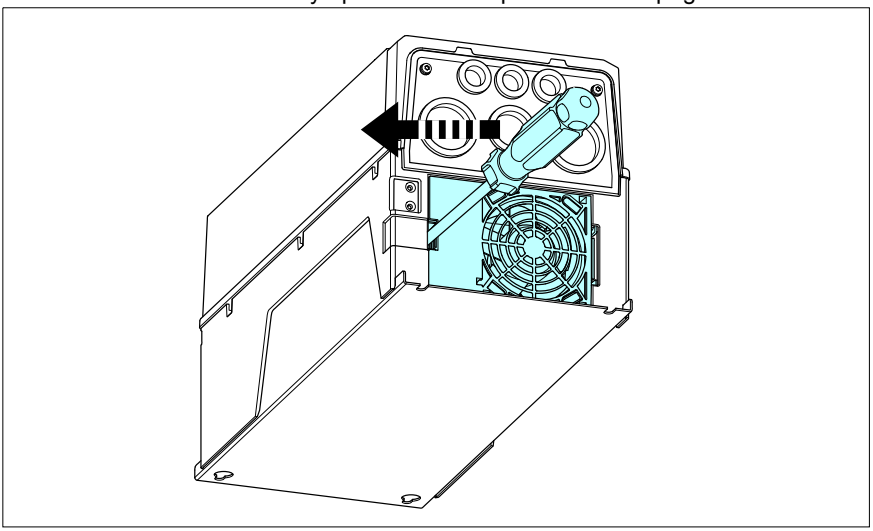

2. **Frames R0…R4:** Insert the sealing plug to the hole.

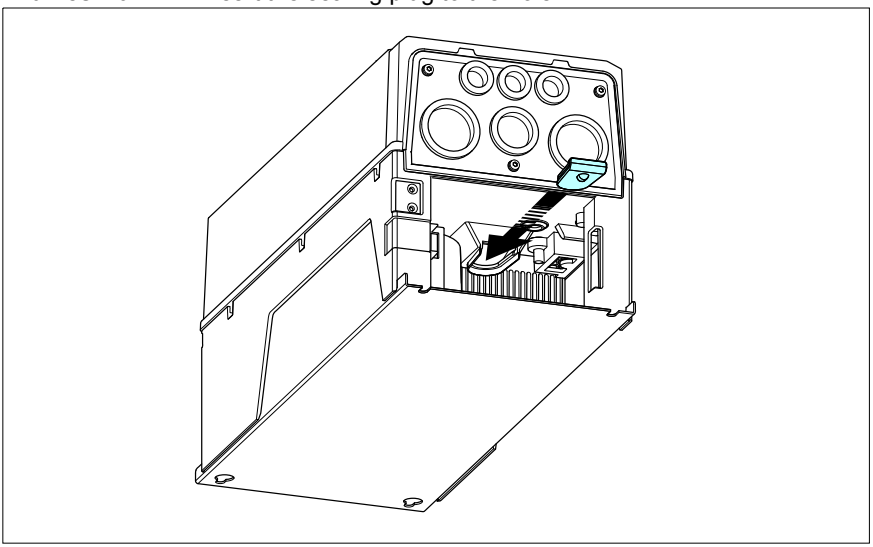

3. **Frames R0…R4:** Reinstall the fan assembly.

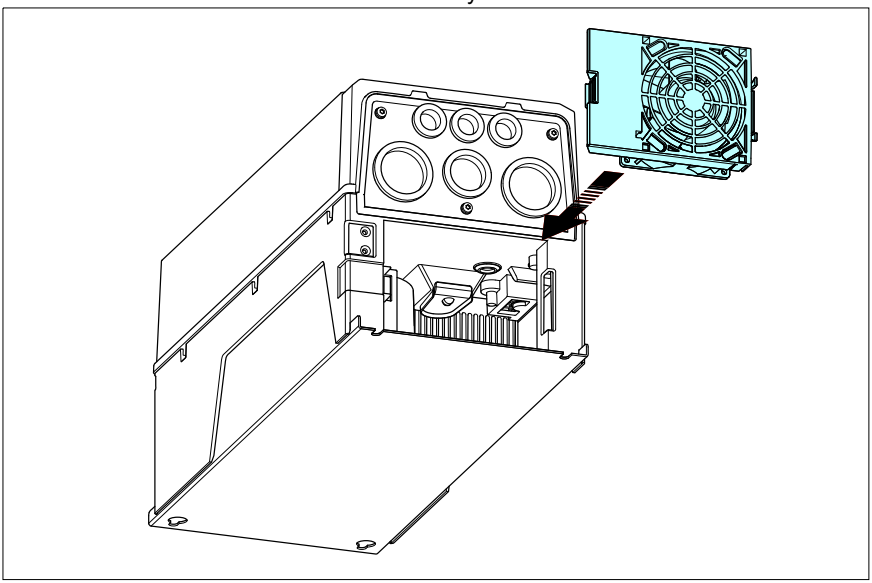

4. **Frames R0…R5:** Attach the U-brackets to the back of the drive.

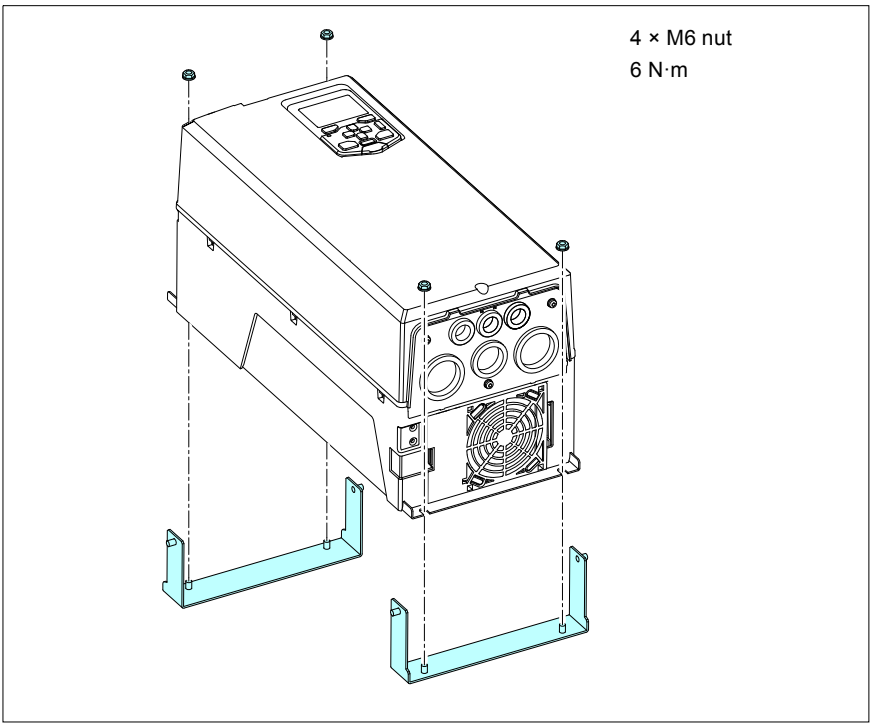

5. **Frames R0…R5:** First attach the side brackets (a) to the U-brackets which were attached in step 4 with M6 nuts. Then attach the tightening brackets (b) to both ends with M5×20 screws.

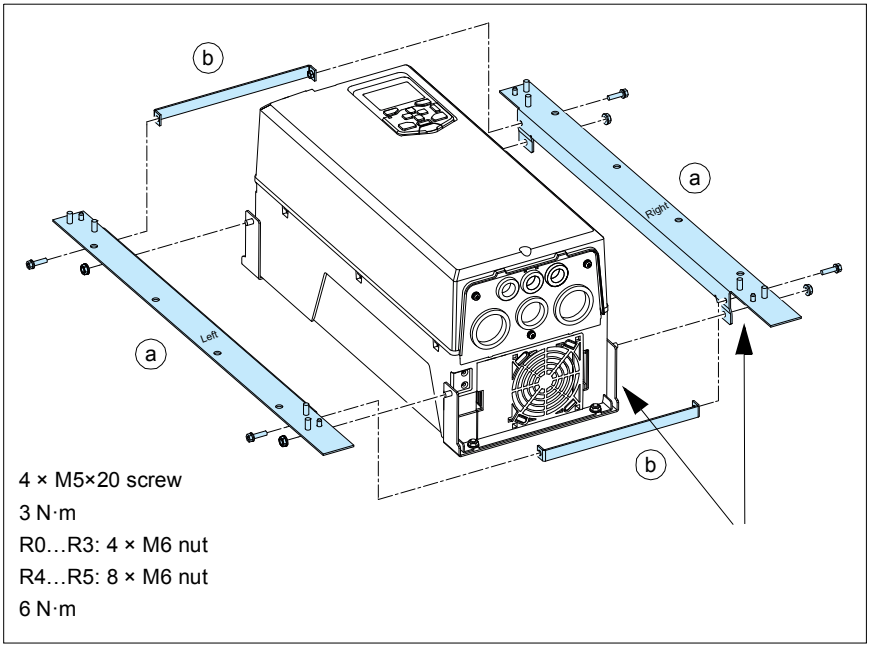

6. **Frames R0…R5:** Attach the top (c) and bottom (d) brackets to the side brackets, first the inner sides (the sides that touch the drive), then the outer sides. Remove the tightening bracket (e) from the front of the fan.

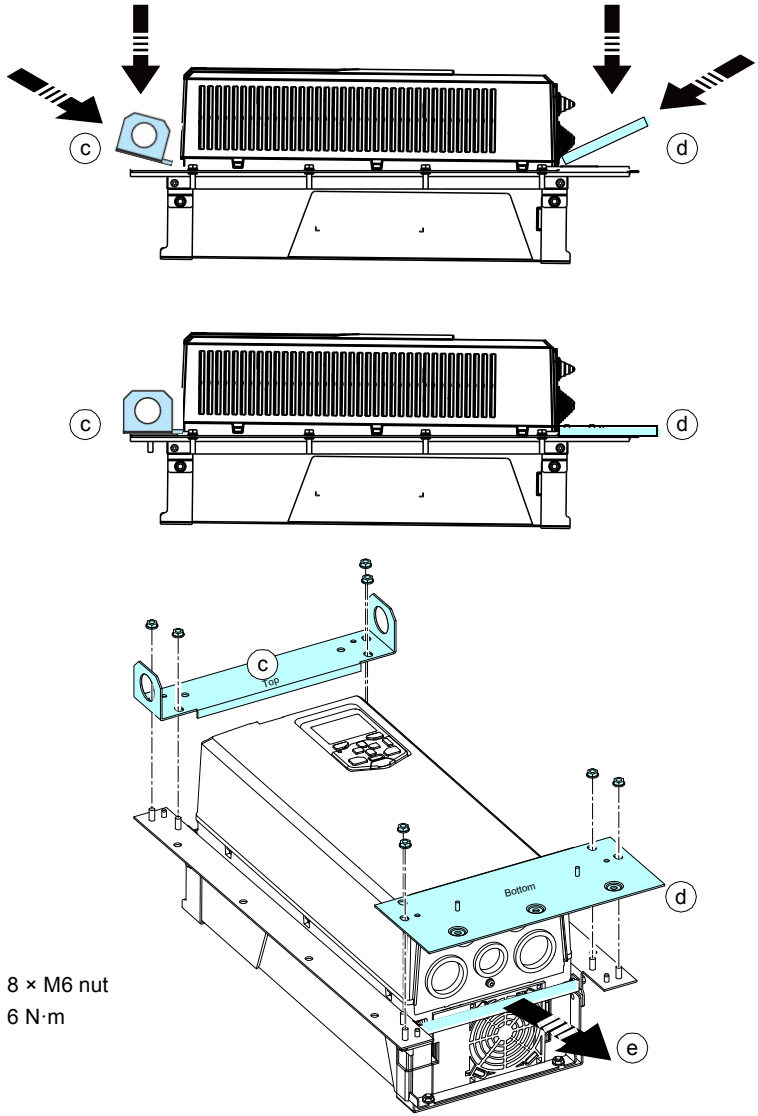

Note for frames R0…R5, P21:

- If you use the IP21 cover with the flange mounting kit, install an internal fan (sold separately) to the drive or remove the IP21 cover for ventilation (f).
- If you install an IP21 drive in dry environment, you can leave the cover in place but DO NOT insert the sealing plug.
- Frame R5 has an internal fan. With R5, you can leave the cover in place.

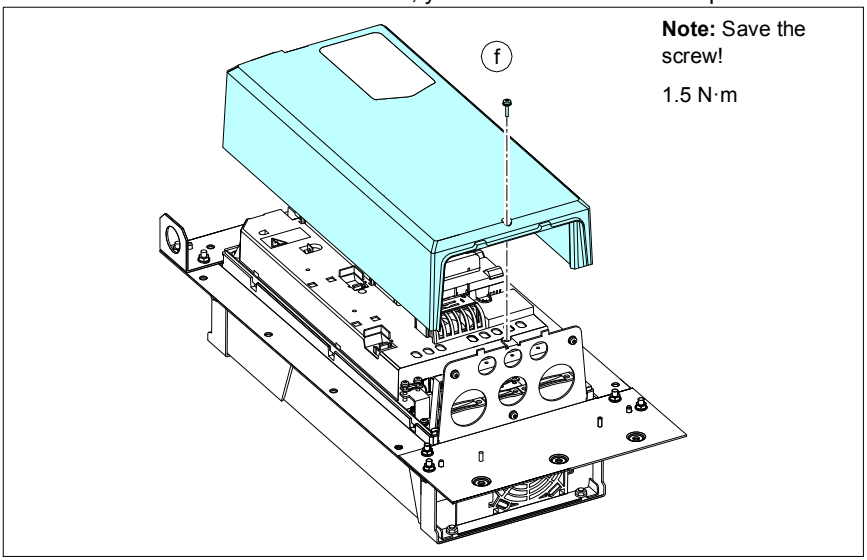

Optional steps:

- If you wish to install the power cable shelf lower on the bottom bracket, first remove the cover and lead-through plate.

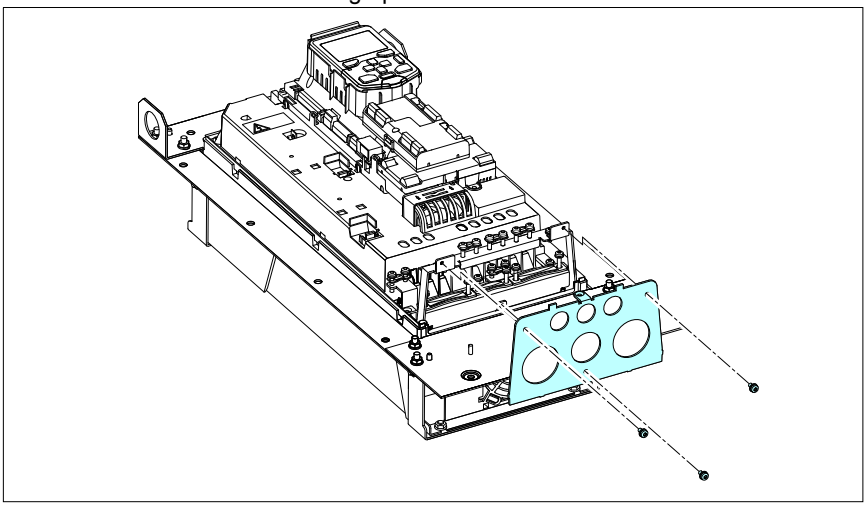

- Then detach the power cable shelf and attach it to the bottom bracket with M4 nuts.

Note: Frame R3 is shown here as an example. The cable shelf varies in different frame sizes.

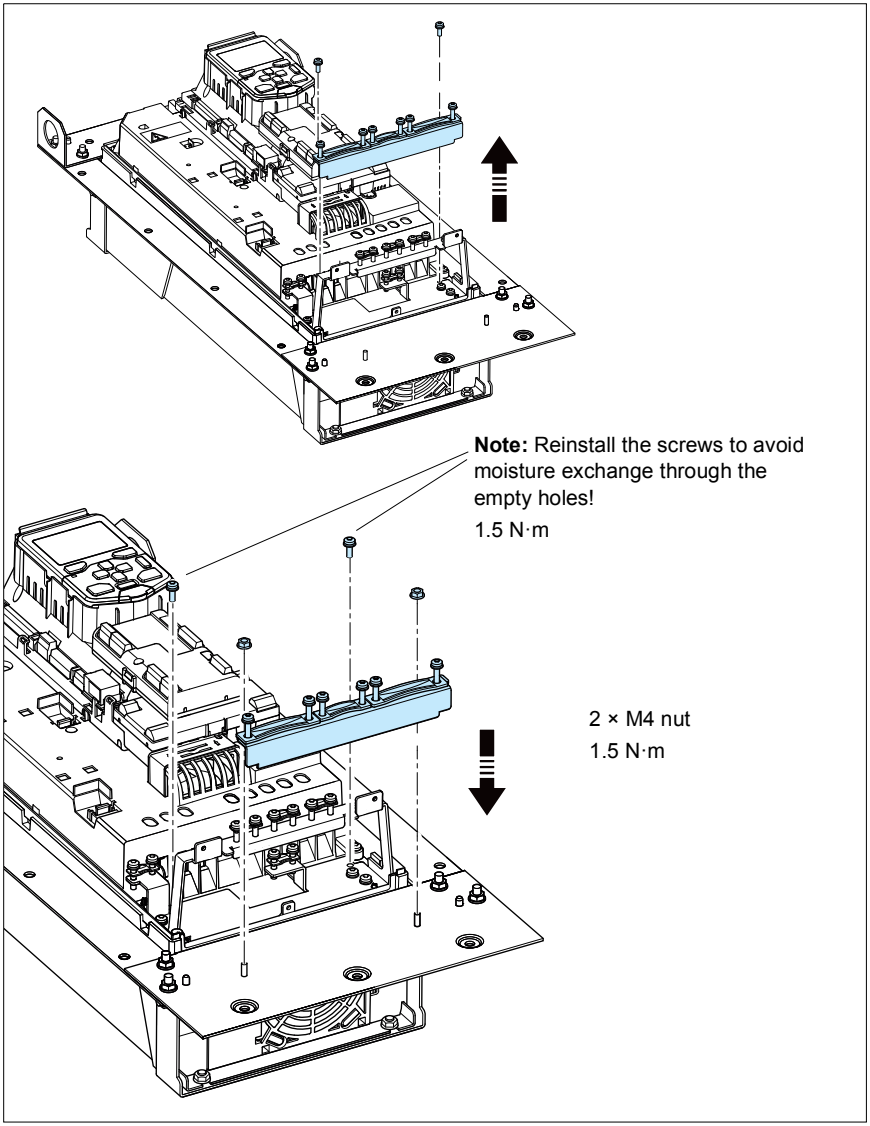

7. See chapter *Dimension drawings for ACS580-01, ACH580-01 and ACQ580-01* for the dimensions of the flange and the required opening in the mounting plate. Attach the mounting template from the flange mounting kit package onto the mounting plate.

   Make the opening and drill the holes for the mounting screws. Consider the hole size for the Rivet or Kalei nuts (not included in the delivery). Remove the mounting template.

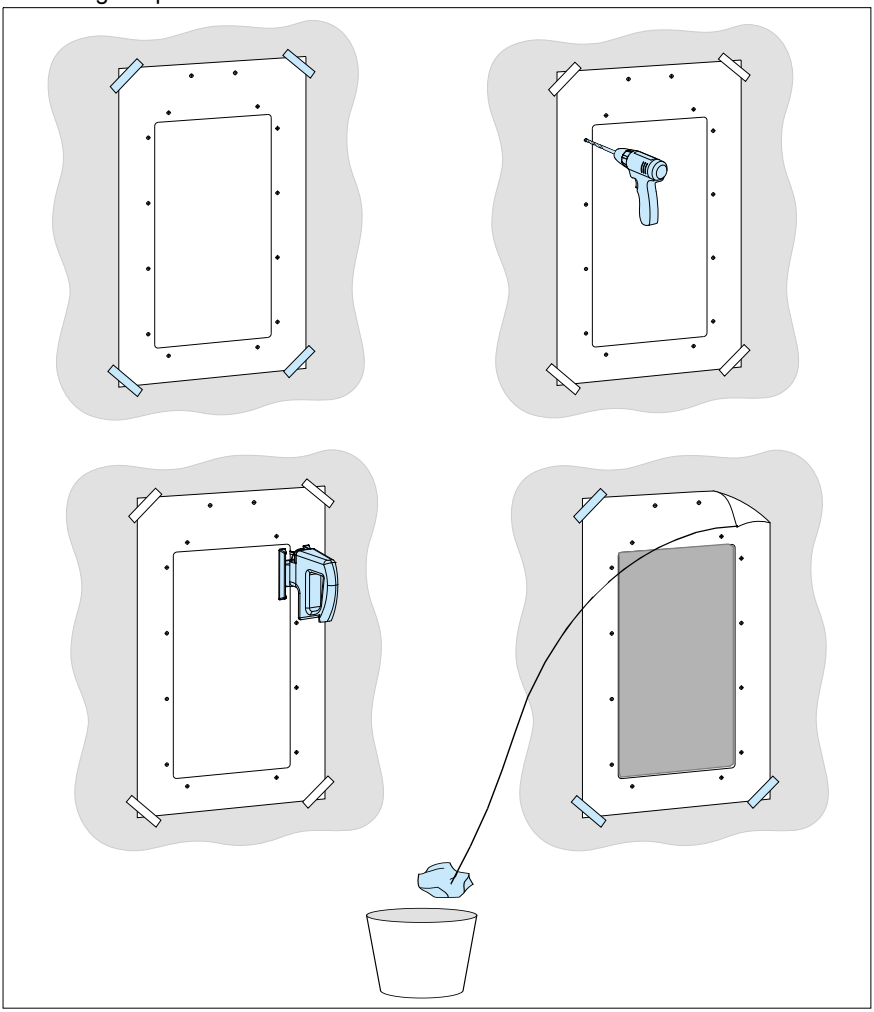

8. **UL Type 12 drives only**: Attach the hood to the cooling channel.

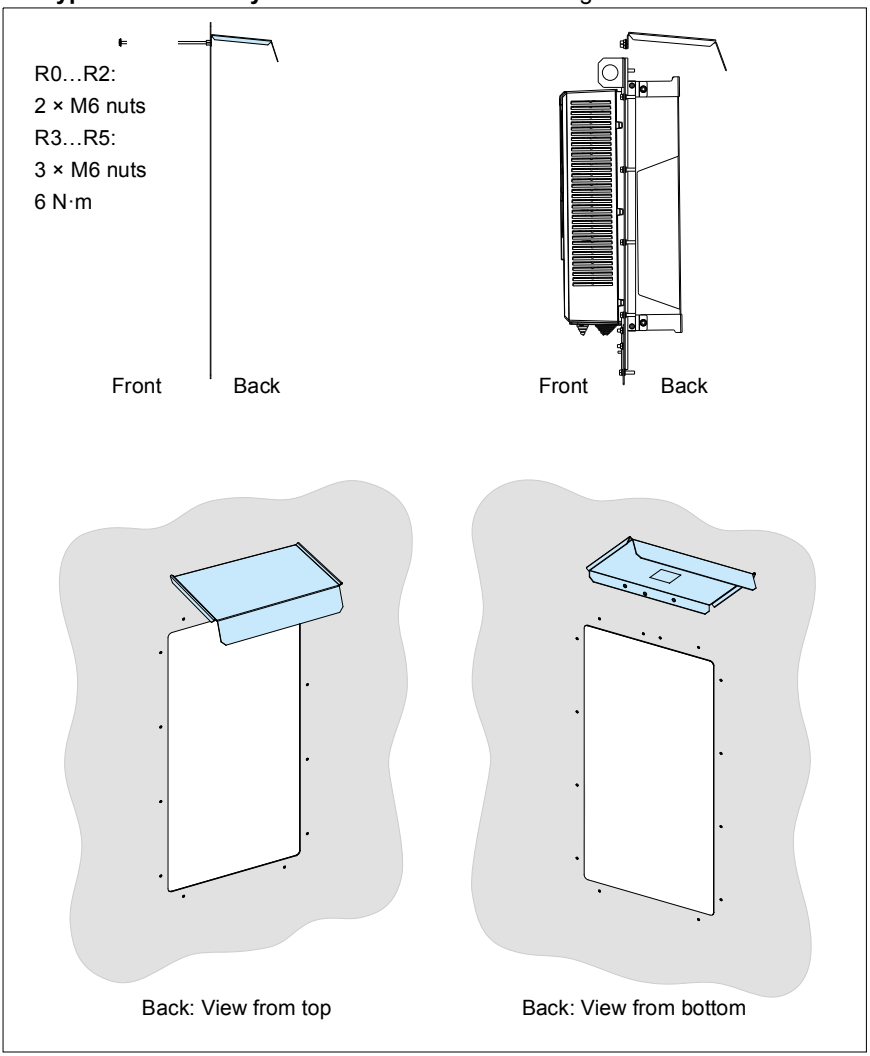

9. Attach chains to the drive lifting holes and lift the drive with a lifting device onto the opening in the mounting plate.
10. Attach the bottom bracket with one screw.
11. Attach the top bracket with one screw.
12. Attach the rest of the mounting screws. Remove the chains.

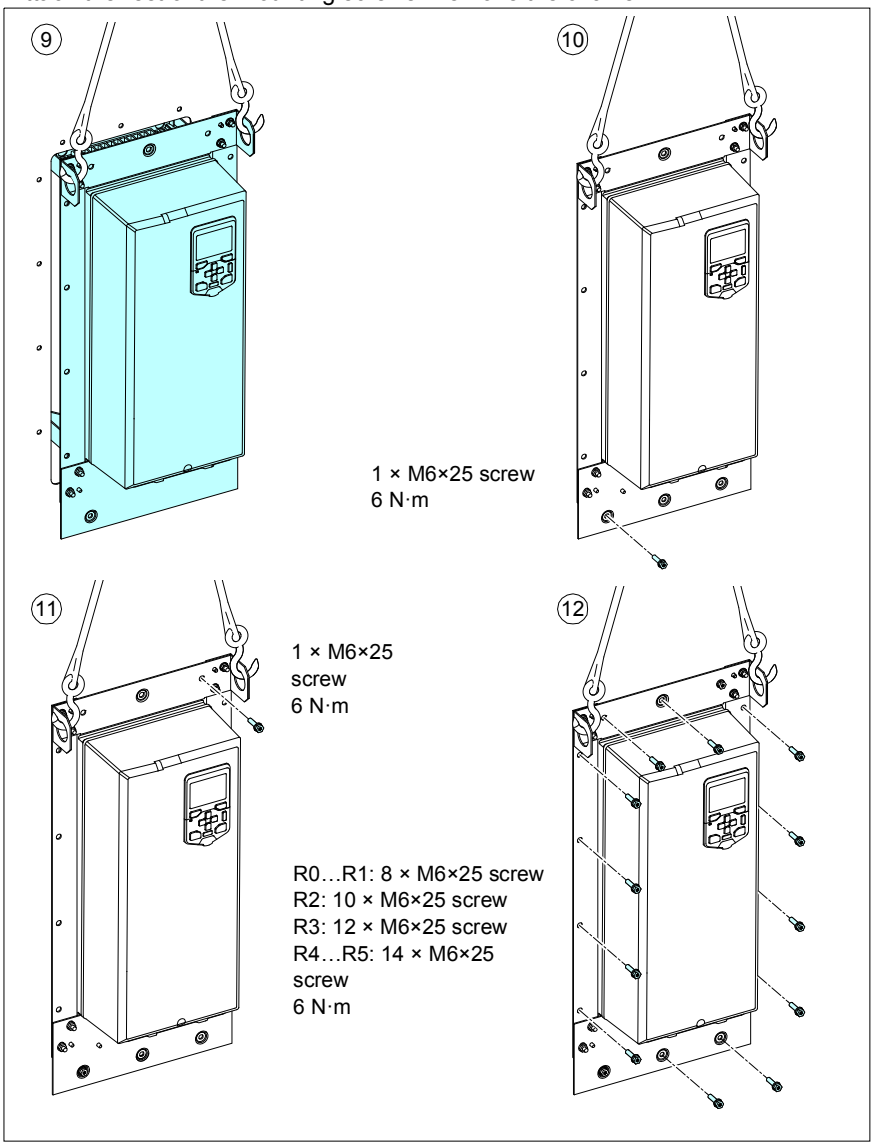

Frames R6 to R9

1. Attach the side brackets of the flange to the drive.

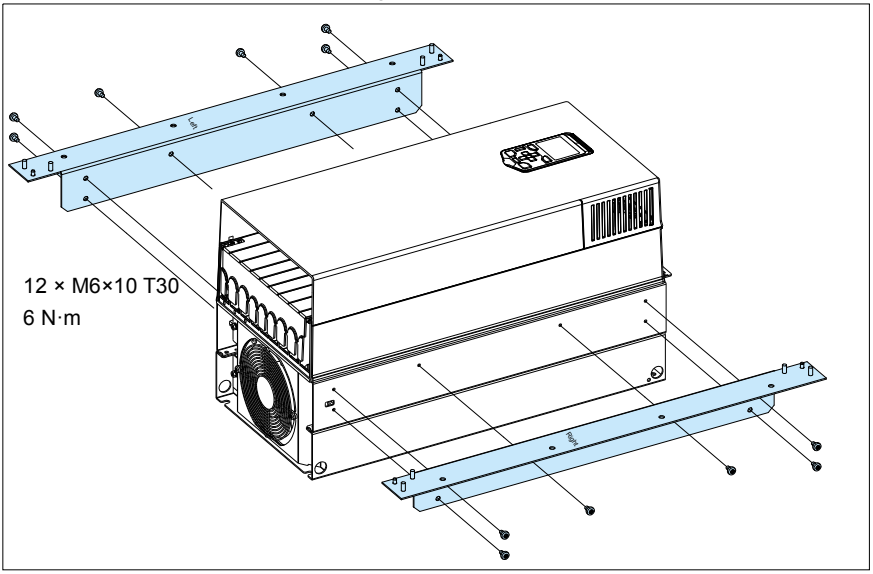

2. Attach the top and bottom brackets.

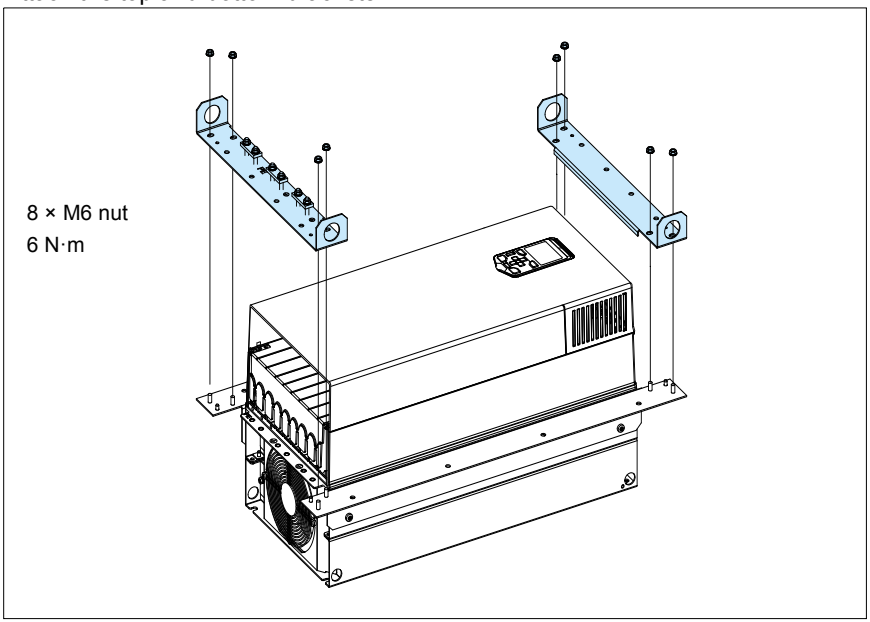

3. See chapter *Dimension drawings for ACS580-01, ACH580-01 and ACQ580-01* for the dimensions of the flange and the required opening in the mounting plate. Attach the mounting template from the flange mounting kit package onto the mounting plate.

   Make the opening and drill the holes for the mounting screws. Consider the hole size for the Rivet or Kalei nuts (not included in the delivery). Remove the mounting template.

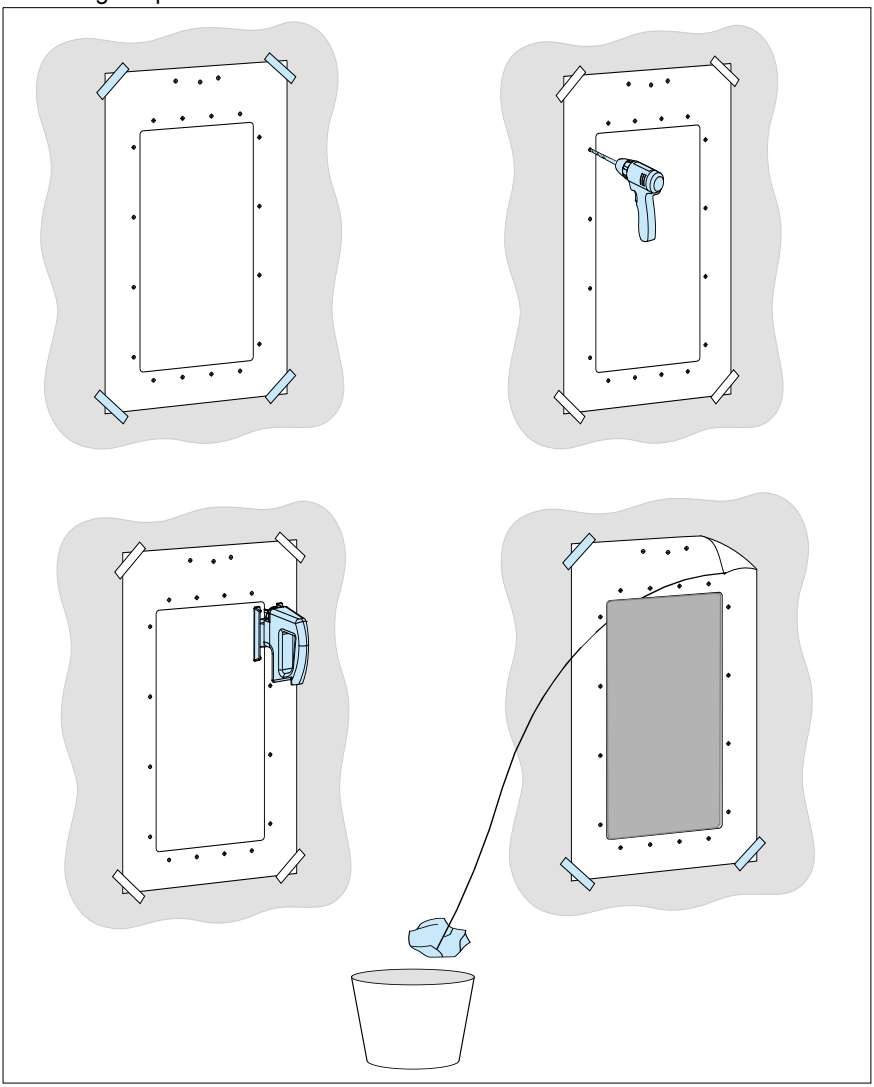

4. **UL Type 12 drives only:** Attach the hood to the cooling channel.

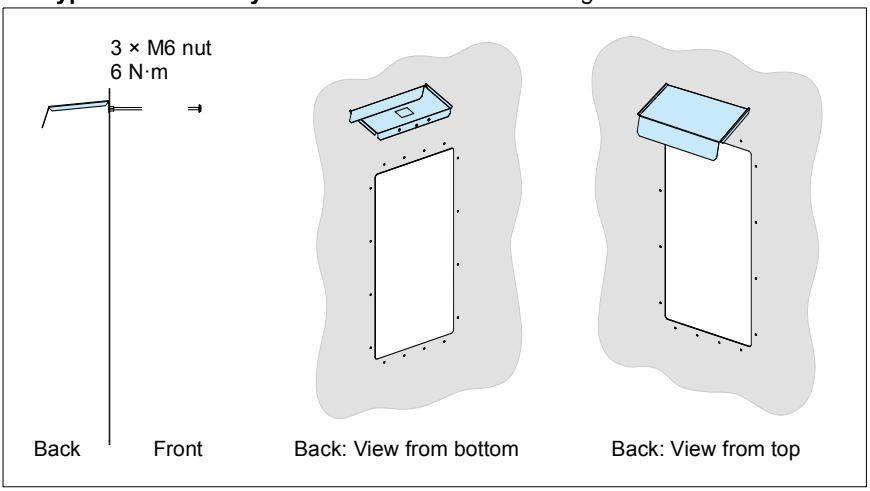

5. Attach the chains to the lifting holes of the flange and lift the drive with a lifting device onto the opening in the mounting plate.

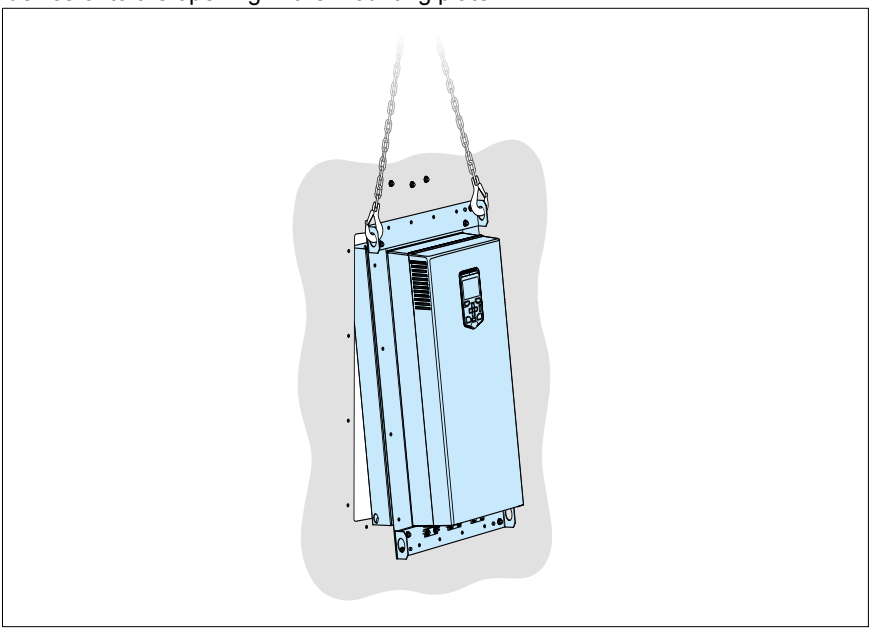

6. Attach the top bracket with one screw.

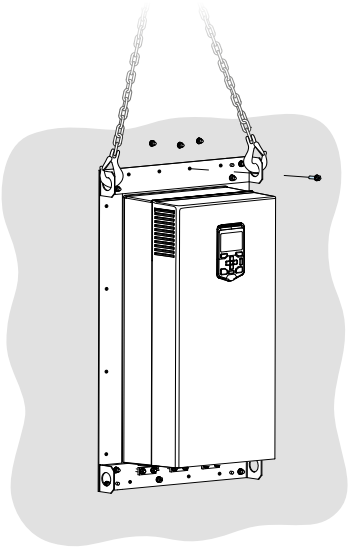

1 × M6×25
6 N·m

7. Attach the bottom bracket with one screw.

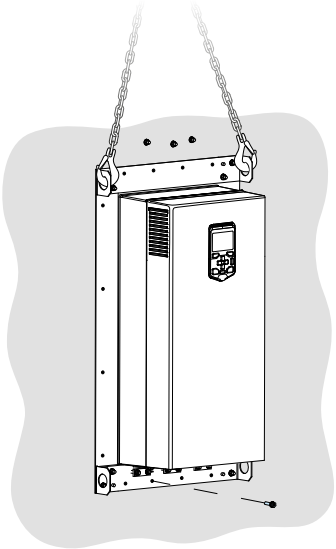

1 × M6×25
6 N·m

8. Attach the rest of the mounting screws. Remove the chains.

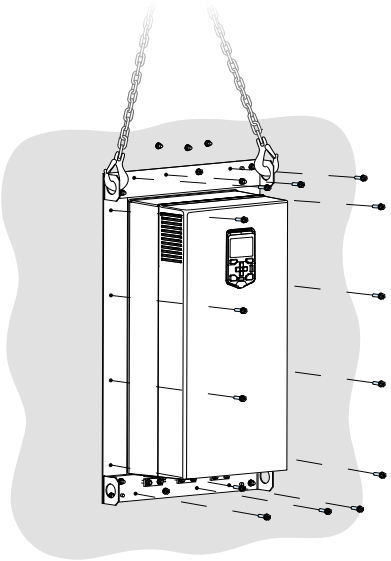

R6…R8:
14 × M6×25
6 N·m

R9:
16 × M6×25
6 N·m

5

Mechanical installation for ACS880-11 and ACS880-31

Contents of this chapter

This chapter describes how to install the drive with the flange mounting kit mechanically.

Safety

WARNING! For frame sizes R6 and R8: Use the lifting eyes of the drive when you lift the drive. Do not tilt the drive. The drive is heavy and its center of gravity is high. An overturning drive can cause physical injury.

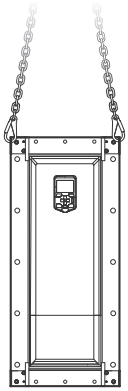

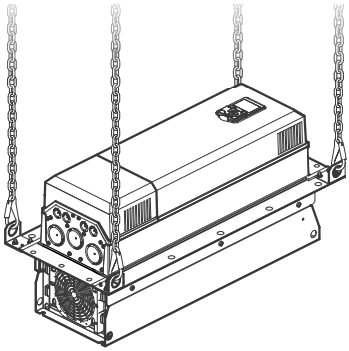

Examining the installation site

Make sure that the installation site agrees with these requirements:

- The installation site has sufficient ventilation to prevent overheating of the drive. See section *Losses, cooling data and noise* in the hardware manual for the required air flow in the cooling air channel and in the front part of the drive.
- The operation conditions of the drive agree with the specifications in section *Ambient conditions* in the hardware manual.
- The mounting plate is vertical, not flammable and strong enough to hold the weight of the drive module.
- The material below the installation is not flammable.
- There is enough free space above and below the drive for cooling air flow, service and maintenance. There is enough free space in front of the drive for operation, service and maintenance. See section *Free space requirements* on page *84* and *Dimensions, weights and free space requirements* in the hardware manual.

Additional requirements for cabinet installations

Make sure that the cooling air gratings of the drive will not be covered. Make sure that the required cooling air change is achieved. In a totally closed cabinet with no forced ventilation, a fan for circulating the air inside the cabinet may be needed.

Necessary tools

- Drill and drill bits
- Screwdriver

Moving the drive

Move the transport package by a pallet truck to the installation site.

Unpacking and examining the delivery

Transport package contents

The flange mounting kit package is either in the drive package, tied with straps onto the drive package or sent separately. Examine that all items are present and there are no signs of damage. Read the data on the type designation label of the drive to make sure that the drive is of the correct type.

Frame R3

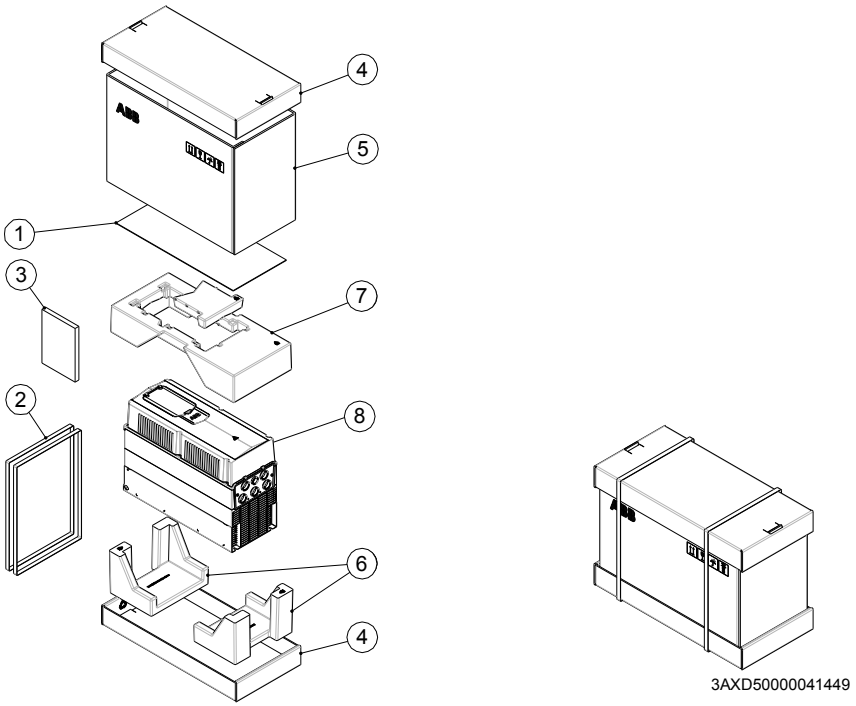

Item	Description	Item	Description
1	Mounting template	5	Sleeve
2	PET straps	6	Package cushion
3	Printed quick guides and manuals, multilingual residual voltage warning sticker, manuals CD	7	Foam cushion
4	Tray	8	Drive with factory installed options.

- To unpack:
- Cut the straps (2).
- Remove the tray (4) and sleeve (5).
- Remove the cover protecting film.
- Lift the drive (8).

Frames R6 and R8

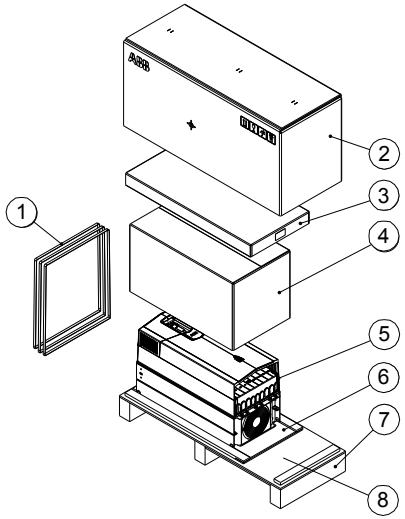

Item	Description	Item	Description
1	Straps	5	Drive with factory installed options
2	Cardboard cover	6	Pallet stopper
3	Flange mounting kit	7	Pallet tray
4	Cardboard sleeve	8	Printed manuals and quick guides, manuals CD and multilingual residual voltage warning stickers

To unpack:

- Cut the straps (1).
- Remove the cardboard cover (2).
- Lift the flange mounting kit (3).
- Remove the cardboard sleeve (4).
- Attach lifting hooks to the lifting eyes of the drive (5). Lift the drive with a hoist.

Flange mounting kit package contents

The illustrations below show the layout of the flange mounting kit packages. Examine that all items are present and there are no signs of damage.

Frame R3

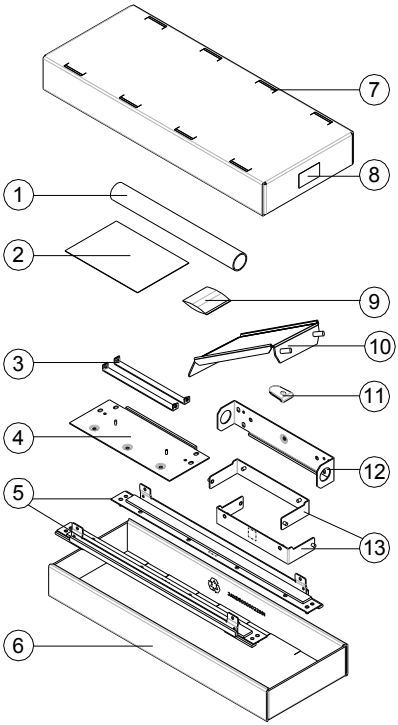

1	Mounting template
2	Quick guide
3	Tightening brackets
4	Bottom bracket
5	Side brackets
6	Cardboard tray
7	Top cardboard cover
8	Option kit package label
9	Screw package: • M4 nut (2 pcs) • M5x20 screw (4 pcs) • M6x25 screw * (R0…R1: 10 pcs; R2: 12 pcs; R3: 14 pcs; R4: 16 pcs) • M6 nut (R0…R2: 18 pcs; R3: 19 pcs; R4: 23 pcs)
10	Hood (required for UL type 12)
11	Sealing plug
12	Top bracket
13	Top and bottom U-brackets

* The delivery does not include the Rivet or Kalei nuts for the M6 screws.

Frames R6 and R8

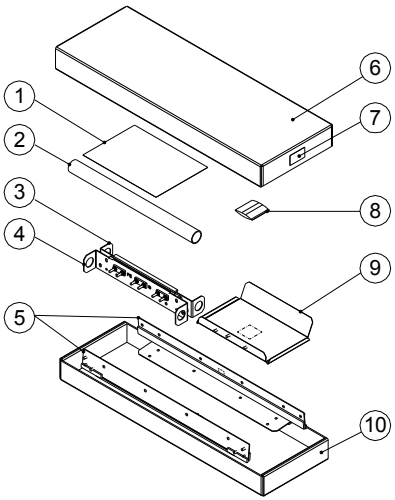

1	Quick guide
2	Mounting template
3	Top bracket
4	Bottom bracket
5	Side brackets
6	Top cardboard cover
7	Option kit package label
8	Screw package: • M6 nut (11 pcs) * • M6×10 T30 (12 pcs) * • M6×25 T25 (R6…R8: 16 pcs, R9: 18 pcs)
9	Hood (required for UL type 12)
10	Cardboard tray

* The delivery does not include the Rivet or Kalei nuts for the M6 screws.

Mounting template

The flange mounting kit package includes a template in actual size for drilling the attaching holes and cutting the holes in the mounting plate.

An example template is shown below.

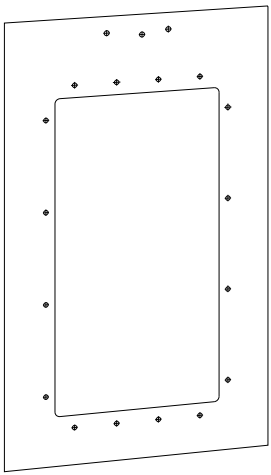

Installing the drive

Free space requirements

The flange-mounted drives can be installed side by side. For free space requirements above and below the drives, see the table.

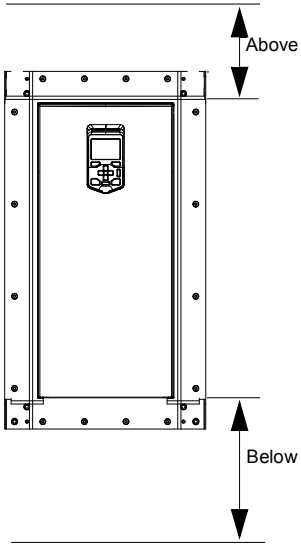

ACS880-11 and ACS880-31			
Above		Below	
mm	in	mm	in
200	7.87	300	11.81
200	7.87	300	11.81
200	7.87	300	11.81

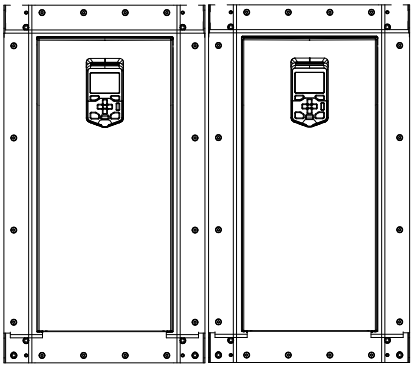

Installing drives above one another

Make sure that the outlet cooling air flows away from the drive above.

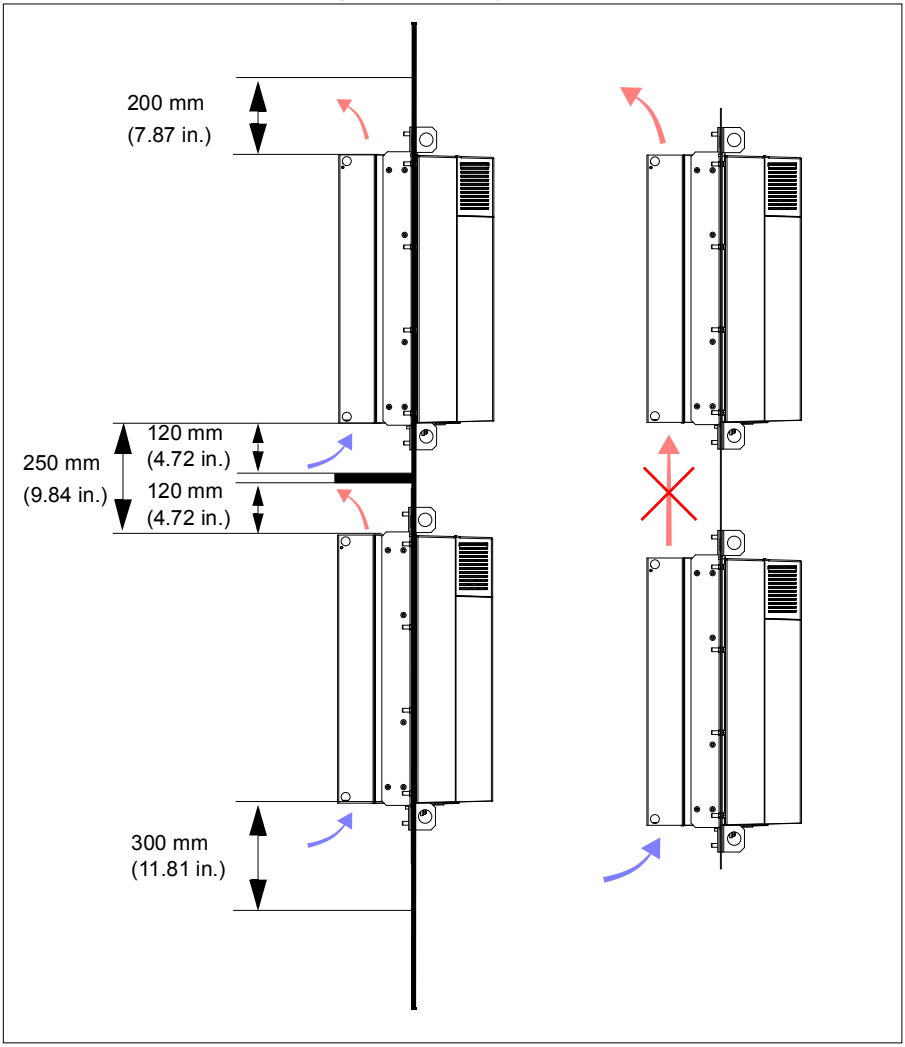

Installation procedure

Frame R3

1. Attach the U-brackets to back of the drive.

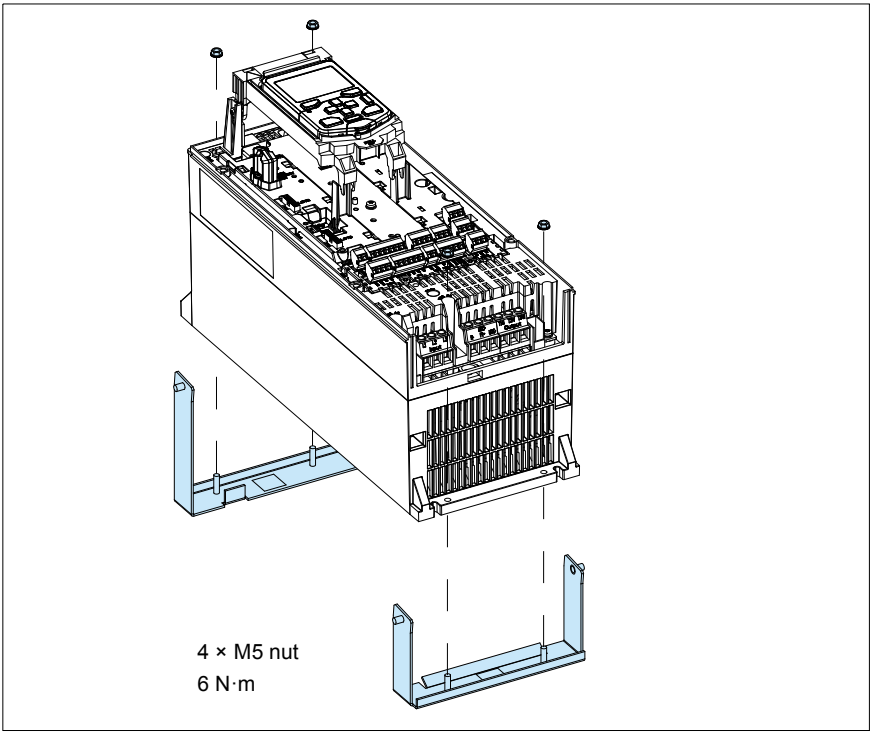

2. Attach the side brackets to the U-brackets with M6 nuts.

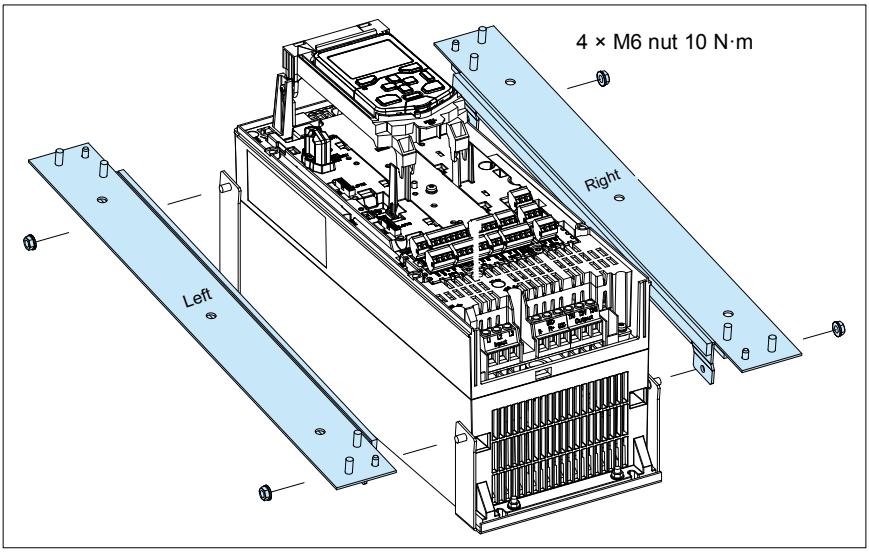

3. Attach the top and bottom brackets to the side brackets.

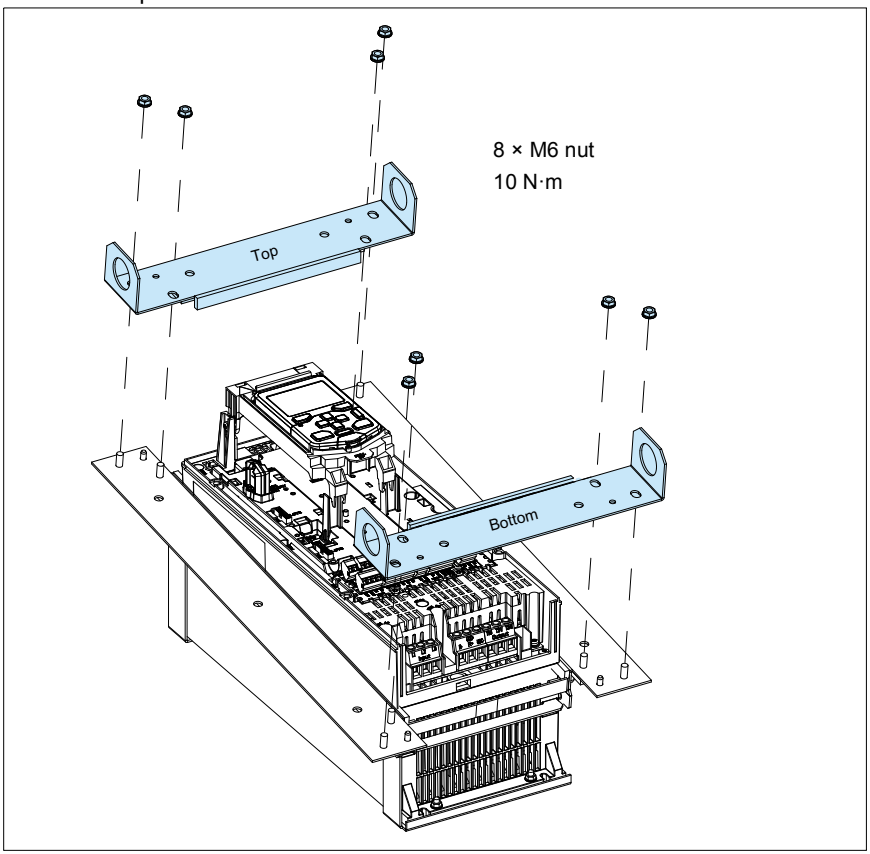

4. See chapter *Dimension drawings for ACS880-11 and ACS880-31* for the dimensions of the flange and the required opening in the mounting plate. Attach the mounting template from the flange mounting kit package onto the mounting plate.

   Make the opening and drill the holes for the mounting screws. Consider the hole size for the Rivet or Kalei nuts (not included in the delivery). Remove the mounting template.

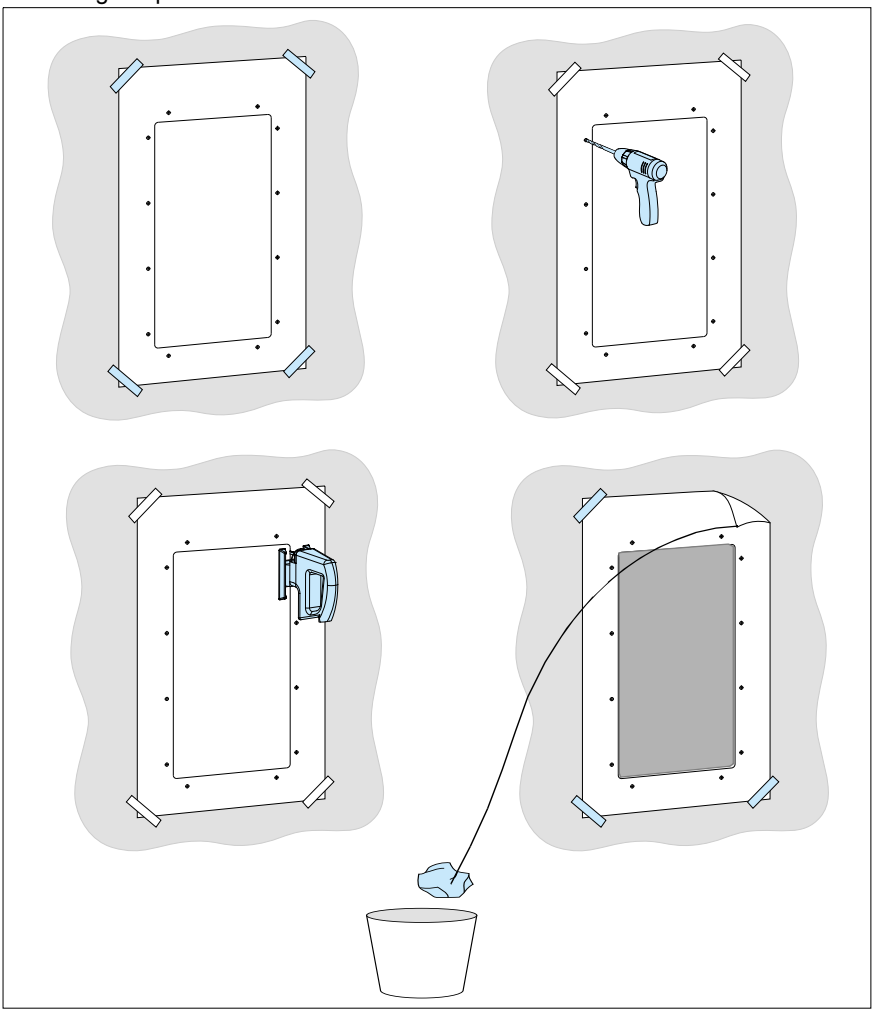

5. Attach chains to the drive lifting holes and lift the drive with a lifting device onto the opening in the mounting plate.

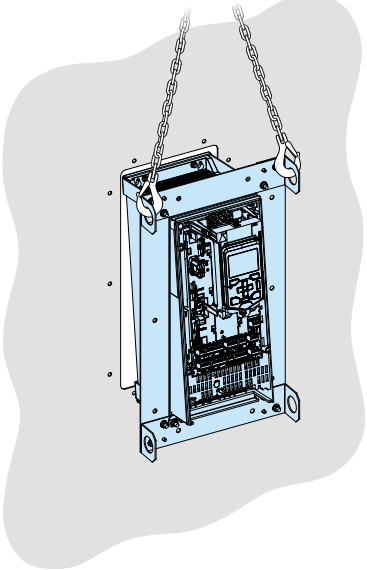

6. Attach the bottom bracket with one screw.

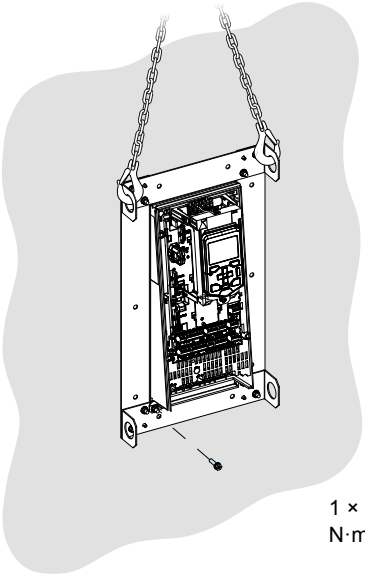

7. Attach the top bracket with one screw.

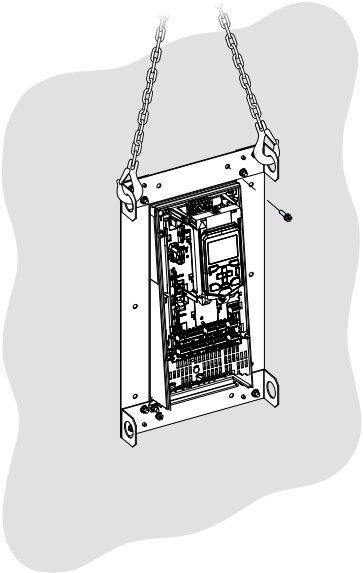

1 × M6×25 screw 10 N·m

8. Attach the rest of the mounting screws. Remove the chains.

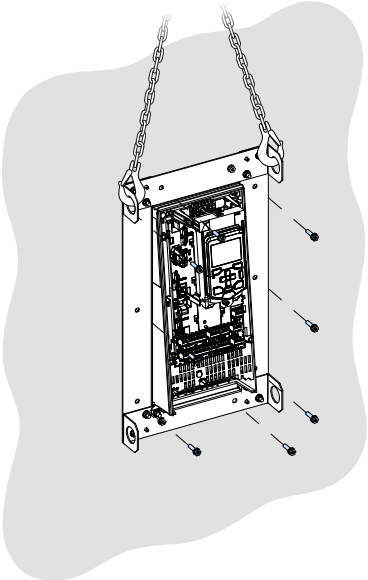

8 × M6×25 screw 10 N·m

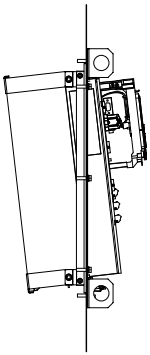

Frames R6 and R8

1. Attach the gasket.

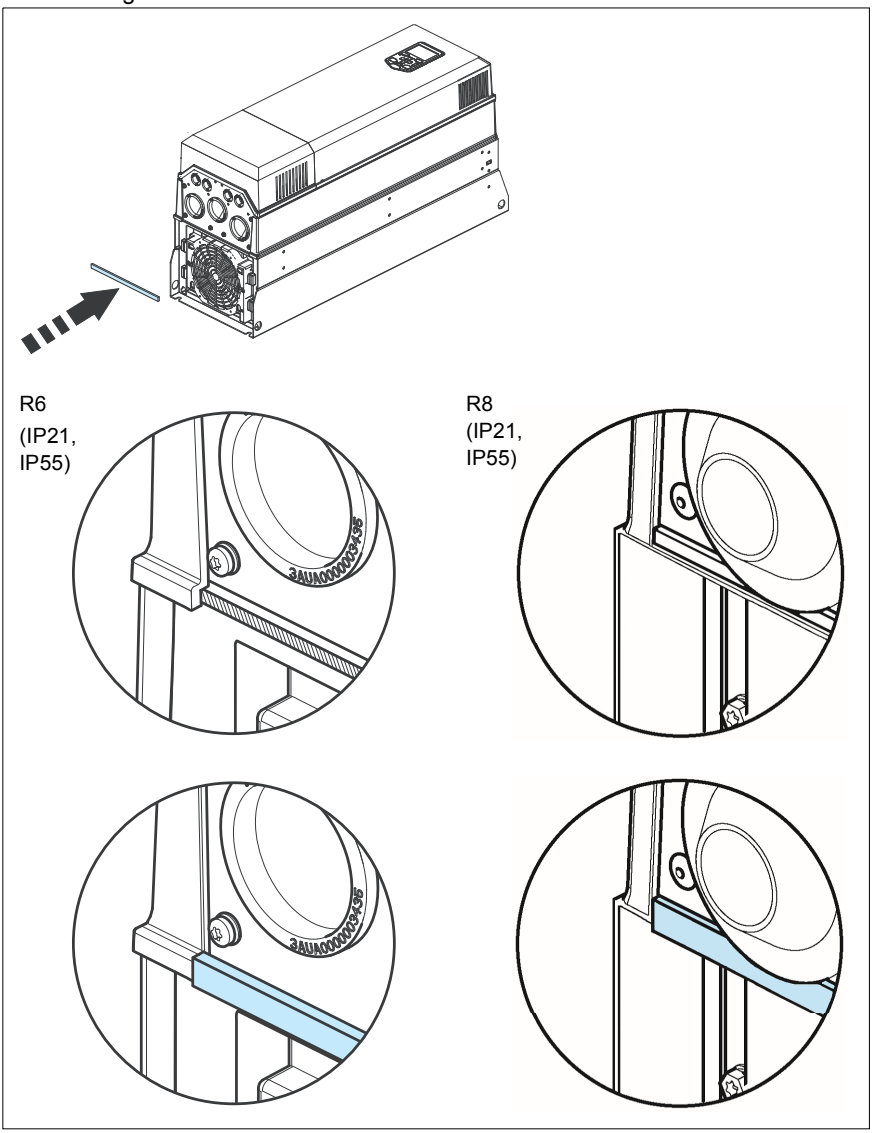

2. Attach the side brackets.

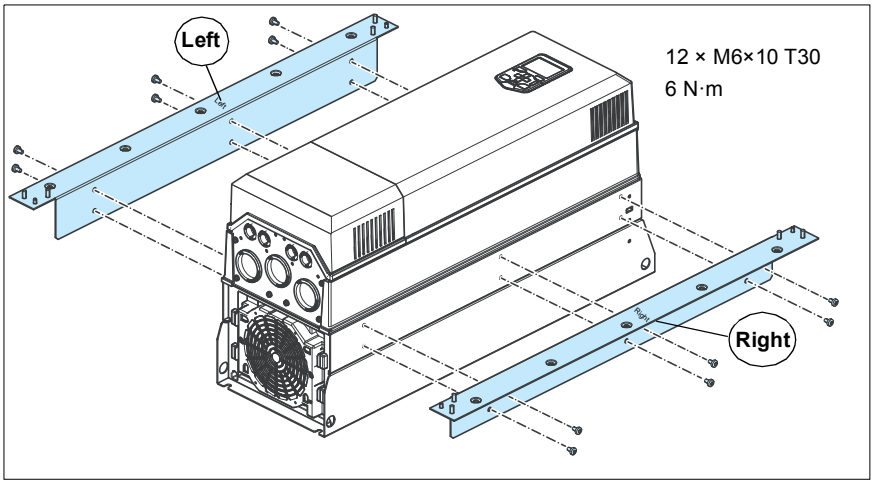

3. Attach the top and bottom brackets to the side brackets, first the inner side (the side that touches the drive), then the outer sides.

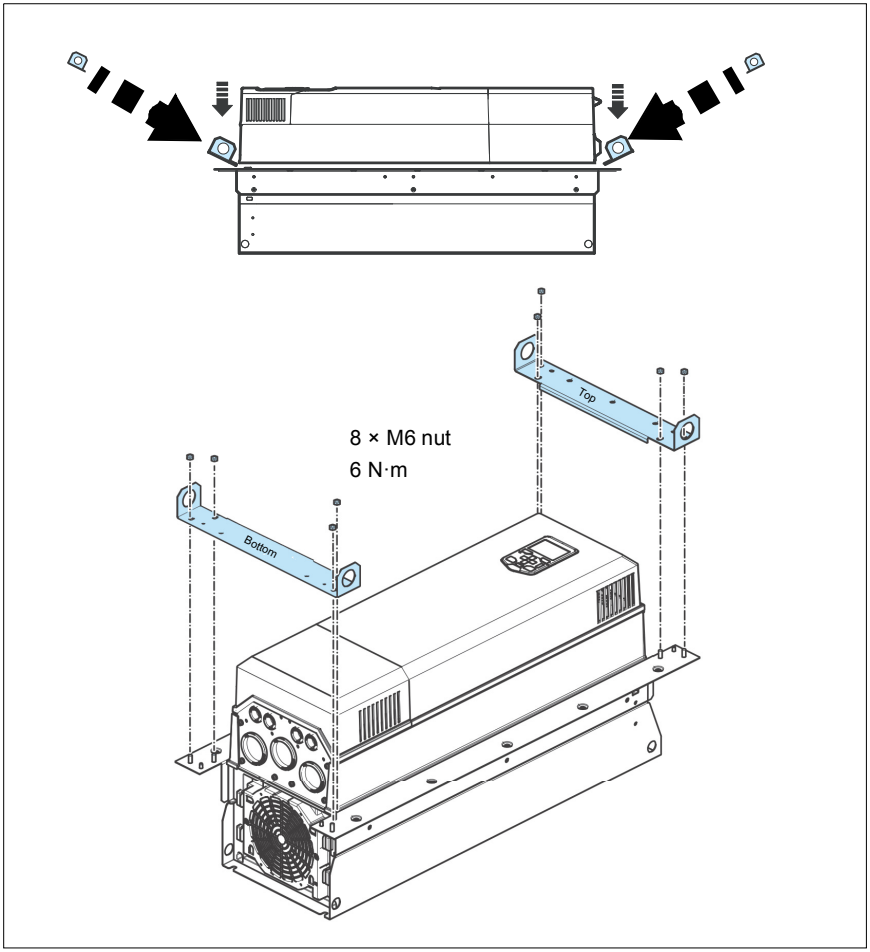

4. IP20: Install the sealing screws.

R6 (IP20)

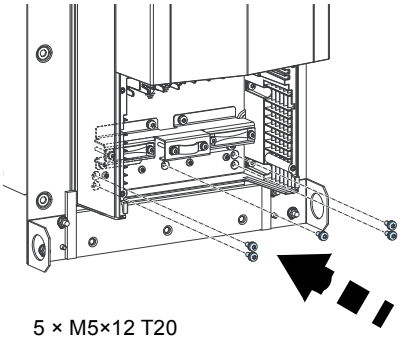

5 × M5×12 T20
3 N·m

R8 (IP20)

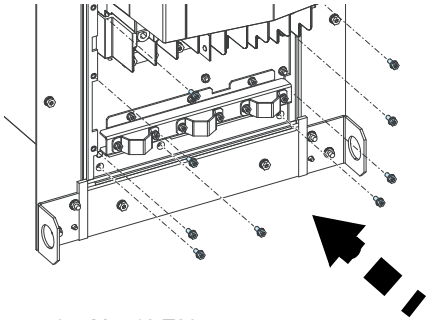

9 × M5×12 T20
3 N·m

5. See chapter *Dimension drawings for ACS880-11 and ACS880-31* for the dimensions of the flange and the required opening in the mounting plate. Attach the mounting template from the flange mounting kit package onto the mounting plate.

   Make the opening and drill the holes for the mounting screws. Consider the hole size for the Rivet or Kalei nuts (not included in the delivery). Remove the mounting template.

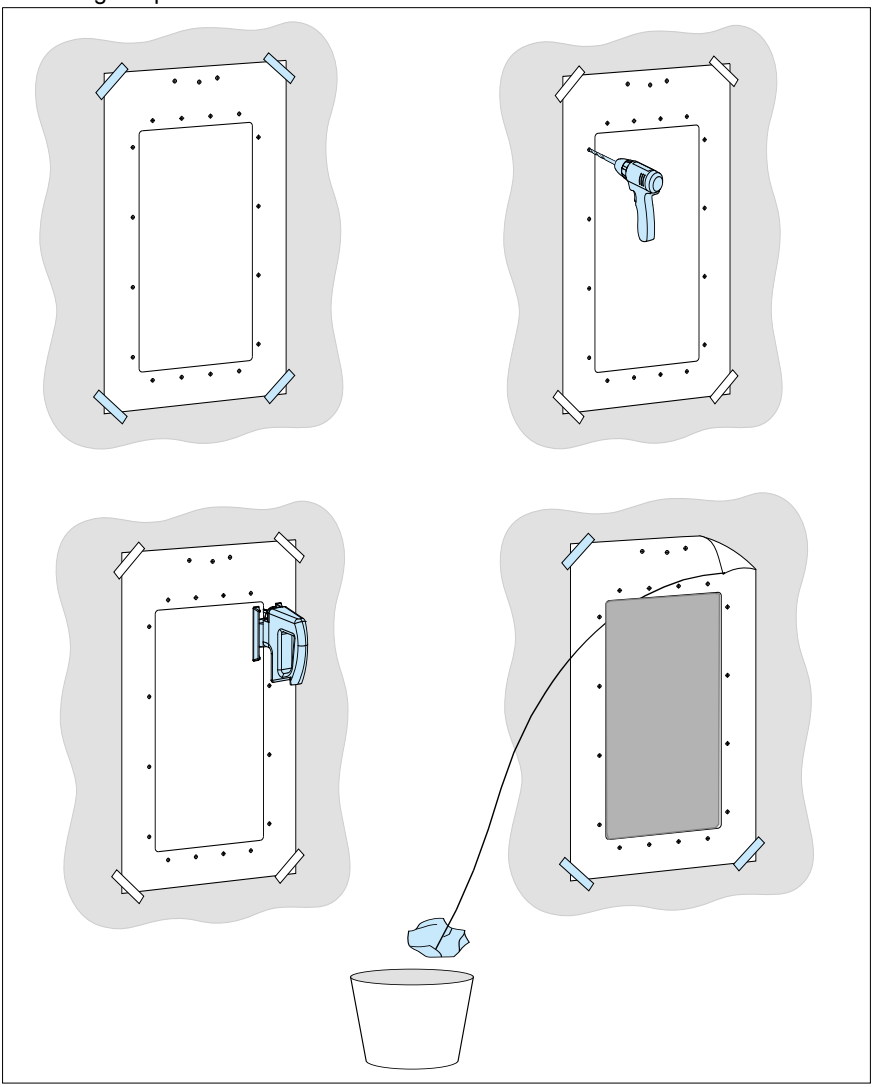

6. **UL Type 12 drives only:** Attach the hood to the cooling channel.

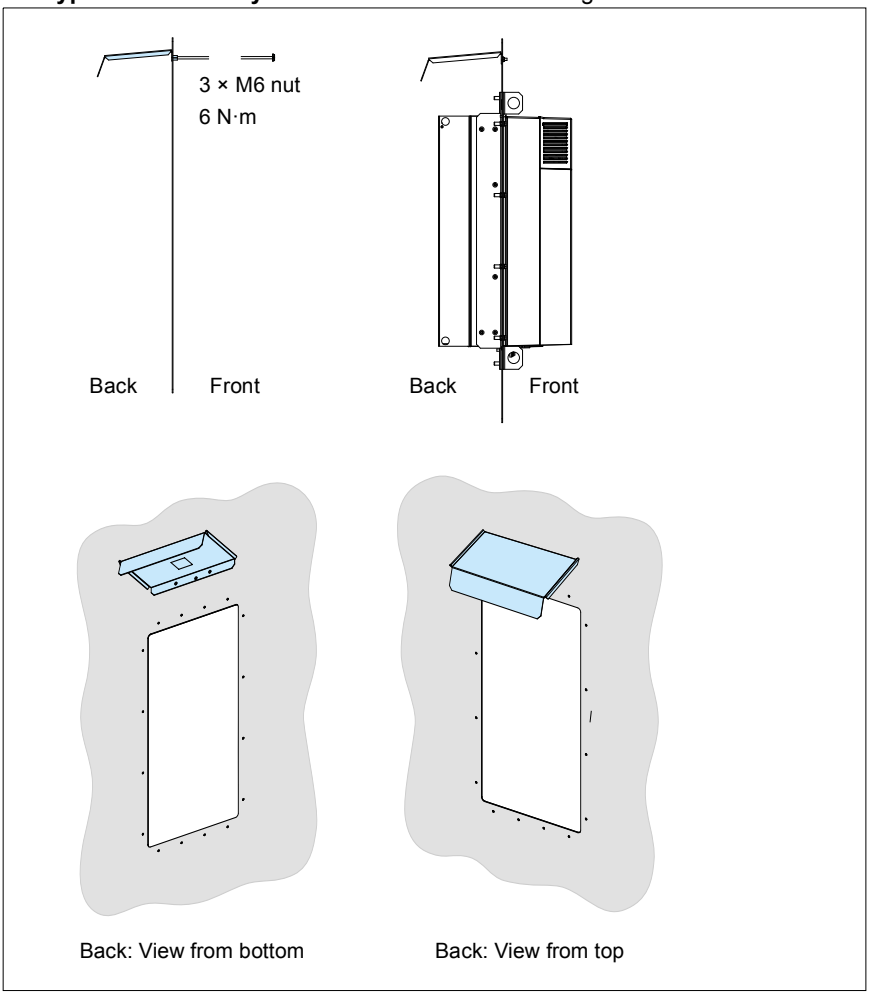

7. Attach the chains to the lifting holes of the flange and lift the drive with a lifting device onto the opening in the mounting plate.

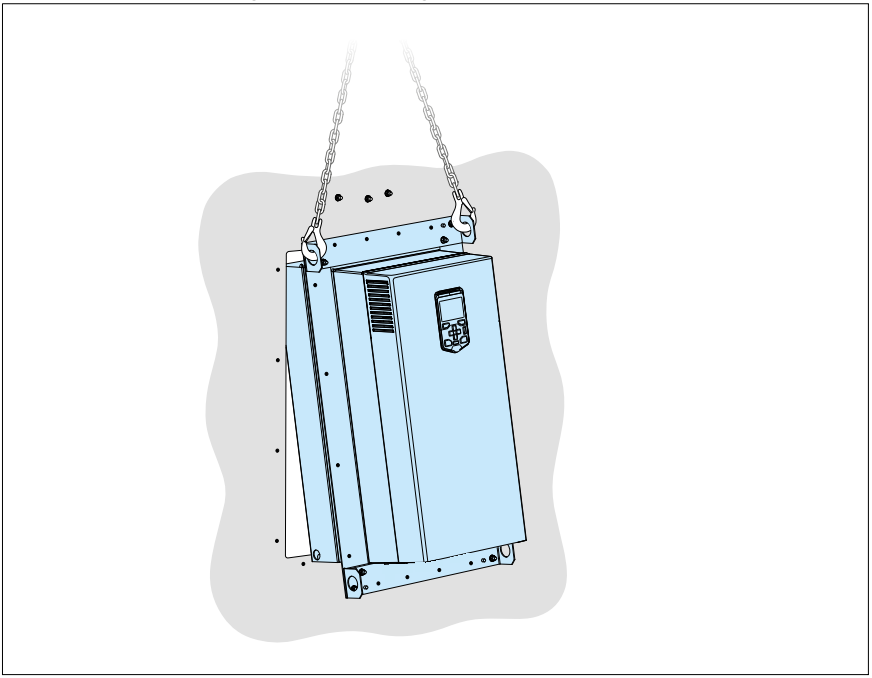

8. Attach the top bracket with one screw.

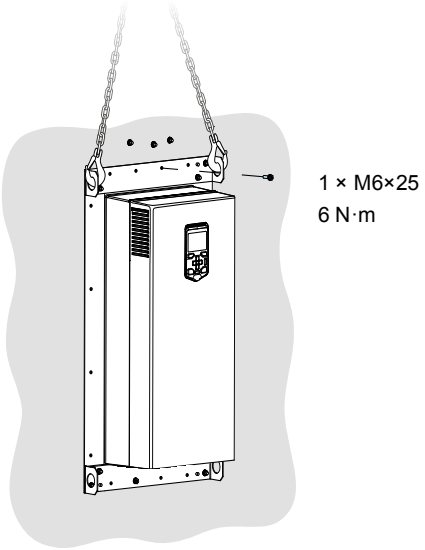

9. Attach the bottom bracket with one screw.

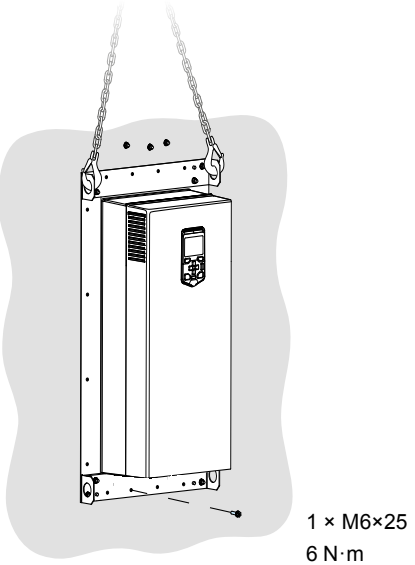

10. Attach the rest of the mounting screws. Remove the chains.

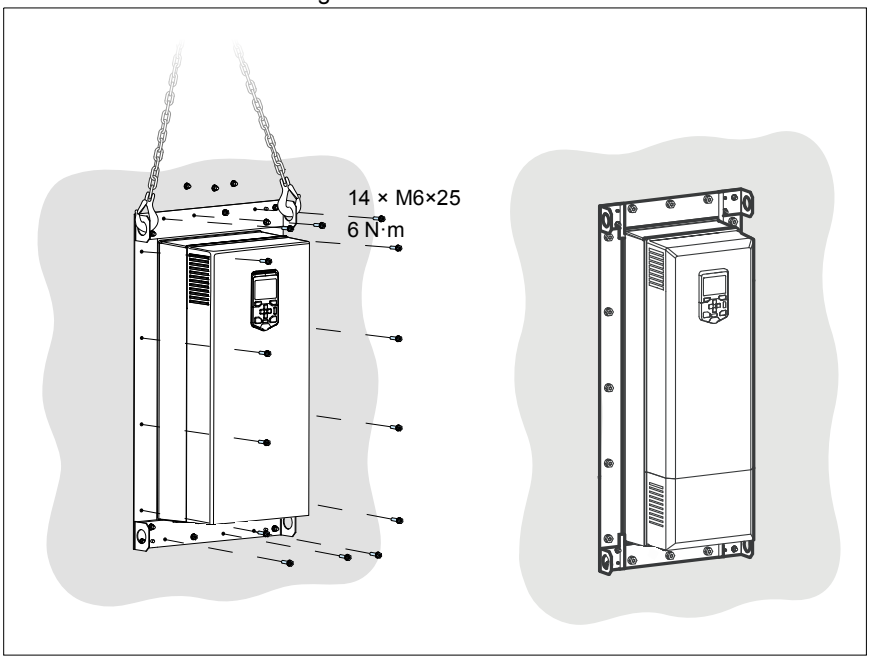

6

Mechanical installation for ACH580-31 and ACQ580-31

Contents of this chapter

This chapter describes how to install the drive with the flange mounting kit mechanically.

Note! Some installation figures display the face of the ACH580-31 model instead of the ACQ580-31 model and vice versa. The installation instructions are still applicable for both models.

Safety

WARNING! For frame sizes R6 and R8: Use the lifting eyes of the drive when you lift the drive. Do not tilt the drive. The drive is heavy and its center of gravity is high. An overturning drive can cause physical injury.

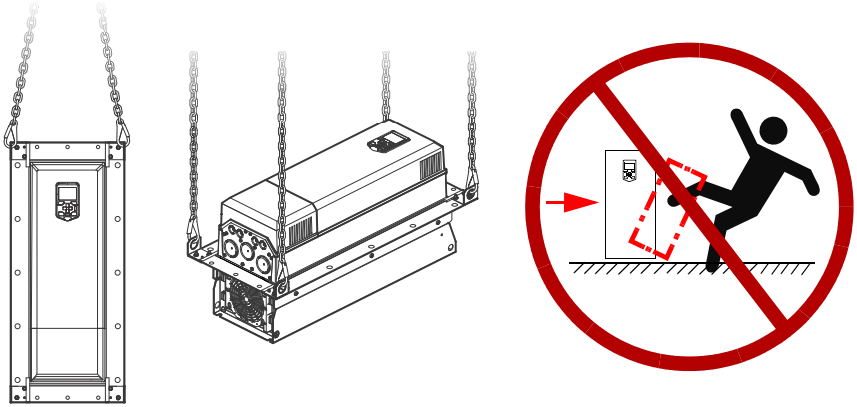

Examining the installation site

Make sure that the installation site agrees with these requirements:

- The installation site has sufficient ventilation to prevent overheating of the drive. See section *Losses, cooling data and noise* in the hardware manual for the required air flow in the cooling air channel and in the front part of the drive.
- The operation conditions of the drive agree with the specifications in section *Ambient conditions* in the hardware manual.
- The mounting plate is vertical, not flammable and strong enough to hold the weight of the drive module.
- The material below the installation is not flammable.
- There is enough free space above and below the drive for cooling air flow, service and maintenance. There is enough free space in front of the drive for operation, service and maintenance. See section *Free space requirements* on page *109* and *Dimensions, weights and free space requirements* in the hardware manual.

Additional requirements for cabinet installations

Make sure that the cooling air gratings of the drive will not be covered. Make sure that the required cooling air change is achieved. In a totally closed cabinet with no forced ventilation, a fan for circulating the air inside the cabinet may be needed.

Necessary tools

- Drill and drill bits
- Screwdriver

Moving the drive

Move the transport package by a pallet truck to the installation site.

Unpacking and examining the delivery

Transport package contents

The flange mounting kit package is either in the drive package, tied with straps onto the drive package or sent separately. Examine that all items are present and there are no signs of damage. Read the data on the type designation label of the drive to make sure that the drive is of the correct type.

Frame R3

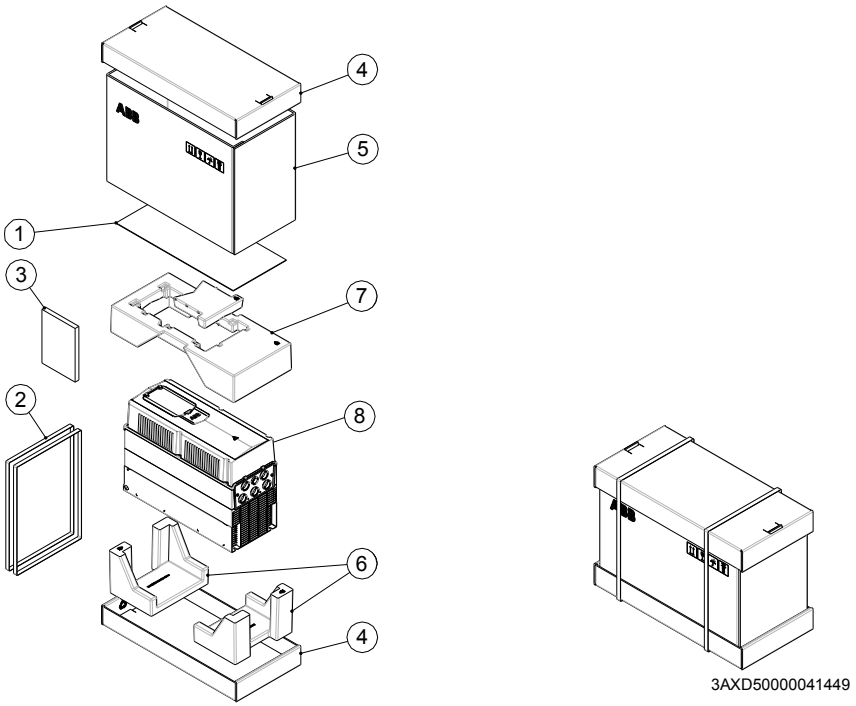

Item	Description	Item	Description
1	Mounting template	5	Sleeve
2	PET straps	6	Package cushion
3	Printed quick guides and manuals, multilingual residual voltage warning sticker, manuals CD	7	Foam cushion
4	Tray	8	Drive with factory installed options.

- To unpack:
- Cut the straps (2).
- Remove the tray (4) and sleeve (5).
- Remove the cover protecting film.
- Lift the drive (8).

Frames R6 and R8

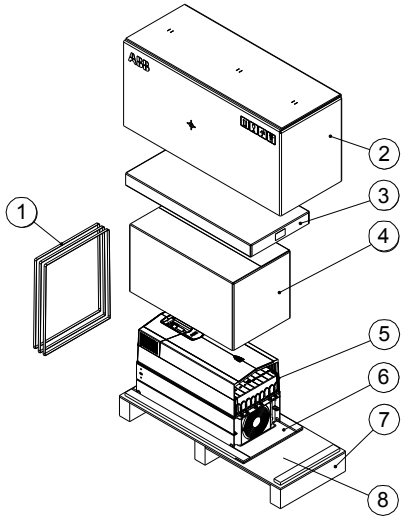

Item	Description	Item	Description
1	Straps	5	Drive with factory installed options
2	Cardboard cover	6	Pallet stopper
3	Flange mounting kit	7	Pallet tray
4	Cardboard sleeve	8	Printed manuals and quick guides, manuals CD and multilingual residual voltage warning stickers

To unpack:

- Cut the straps (1).
- Remove the cardboard cover (2).
- Lift the flange mounting kit (3).
- Remove the cardboard sleeve (4).
- Attach lifting hooks to the lifting eyes of the drive (5). Lift the drive with a hoist.

Flange mounting kit package contents

The illustrations show the layout of the flange mounting kit packages. Examine that all items are present and there are no signs of damage.

Frame R3

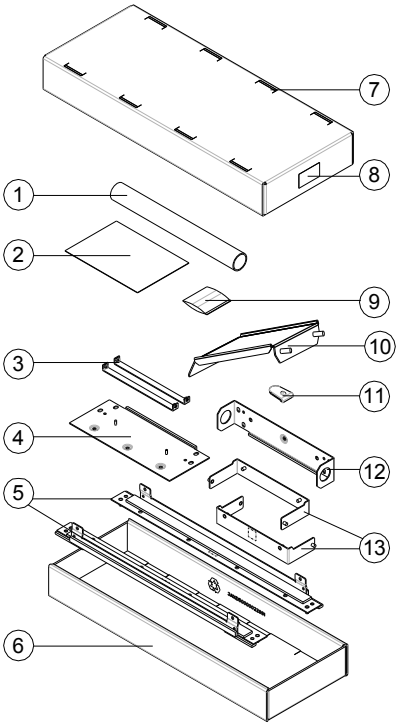

1	Mounting template
2	Quick guide
3	Tightening brackets
4	Bottom bracket
5	Side brackets
6	Cardboard tray
7	Top cardboard cover
8	Option kit package label
9	Screw package: • M4 nut (2 pcs) • M5x20 screw (4 pcs) • M6x25 screw (R0…R1: 10 pcs; R2: 12 pcs; R3: 14 pcs; R4: 16 pcs) • M6 nut (R0…R2: 18 pcs; R3: 19 pcs; R4: 23 pcs)
10	Hood (required for UL type 12)
11	Sealing plug
12	Top bracket
13	Top and bottom U-brackets

Frames R6 and R8

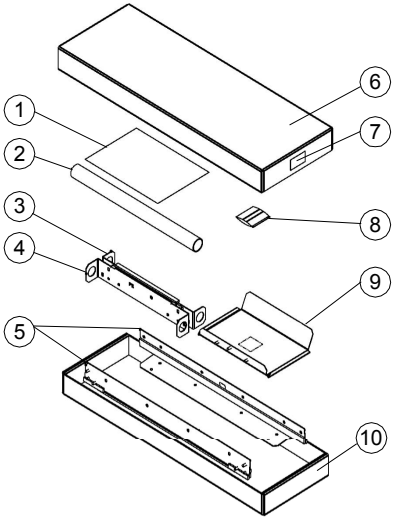

1	Quick guide
2	Mounting template
3	Top bracket
4	Bottom bracket
5	Side brackets
6	Top cardboard cover
7	Option kit package label
8	Screw package: • M6 nut (11 pcs) • M6×10 T30 (12 pcs) • M6×25 T25 (R6…R8: 16 pcs, R9: 18 pcs)
9	Hood (required for UL type 12)
10	Cardboard tray

Example mounting template

The flange mounting kit package includes a template in actual size for drilling the attaching holes and cutting the holes in the mounting plate. For drilling the holes, see the installation procedures for:

- *Frame R3*,
- *Frames R6 and R8*.

Note: The delivery does not include the Rivet or Kalei nuts for the M6 screws. Consider the hole size for the nuts.

An example template is shown below.

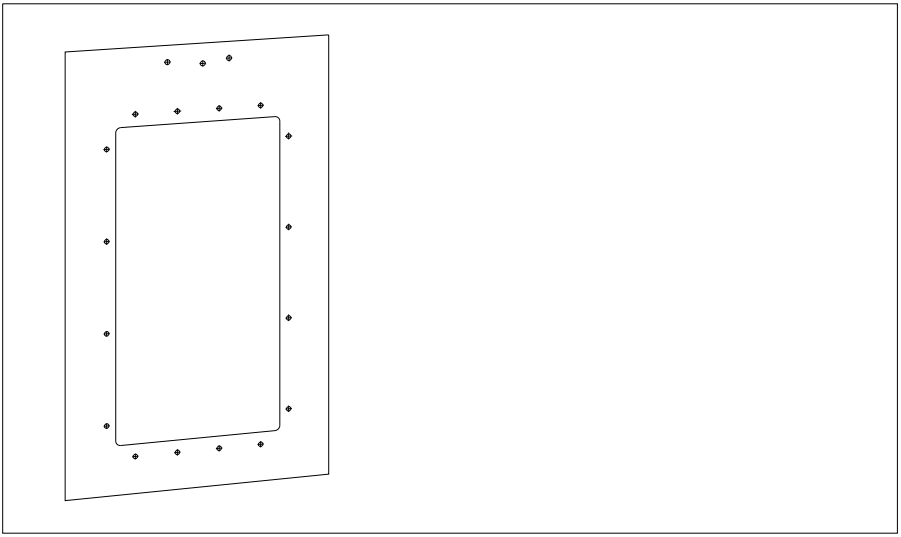

Installing the drive

Free space requirements

The flange-mounted drives can be installed side by side. For free space requirements above and below the drives, see the table.

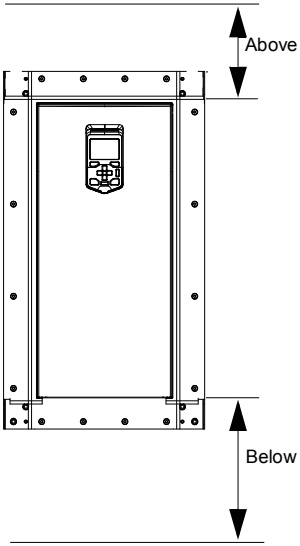

ACH580-31 and ACQ580-31			
Above		Below	
mm	in	mm	in
200	7.87	300	11.81
200	7.87	300	11.81
200	7.87	300	11.81

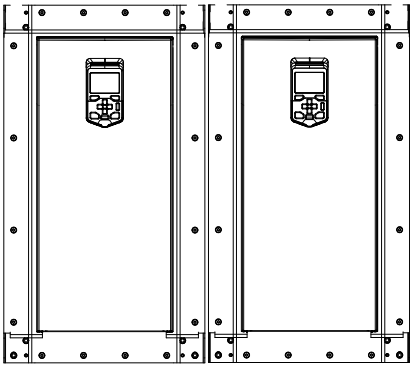

Installing drives above one another

Make sure that the outlet cooling air flows away from the drive above.

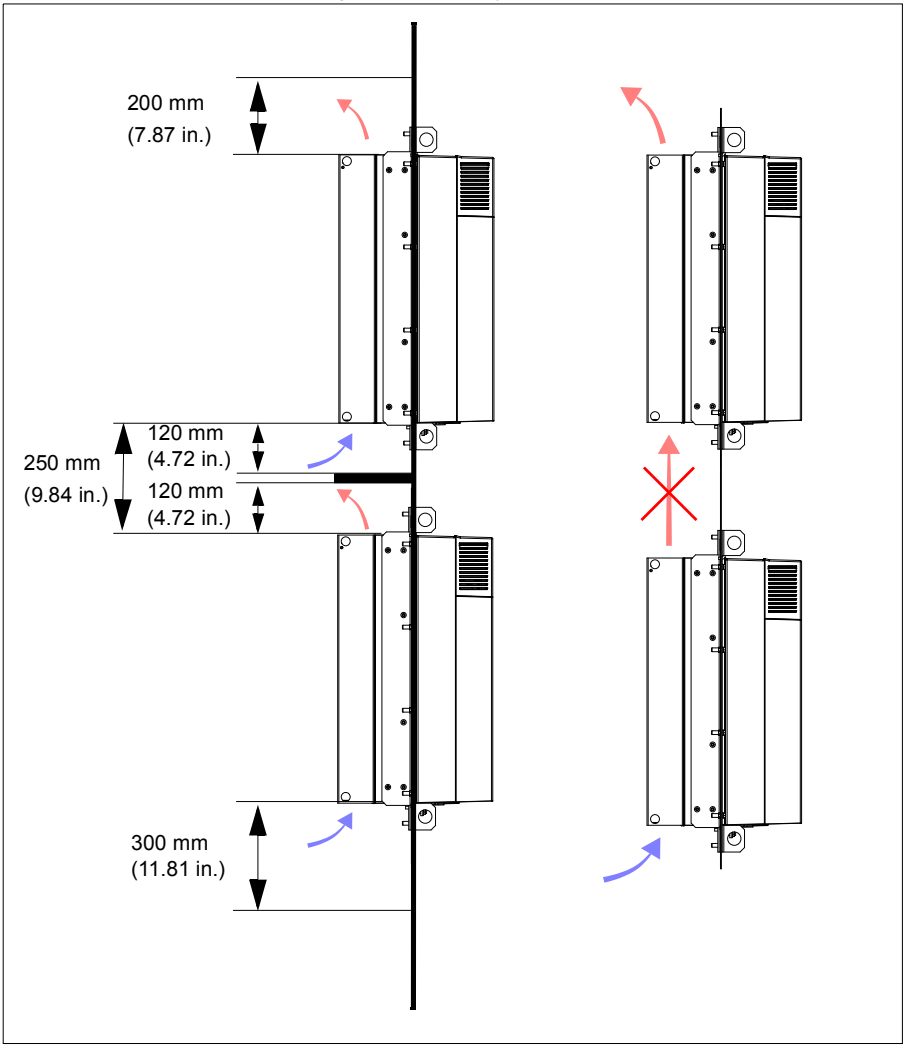

Installation procedure

Frame R3

1. **Frame R3:** To remove the fan assembly, push the retaining clip with a flat screwdriver. Lift the assembly up. See also steps for IP21 on page *115*.

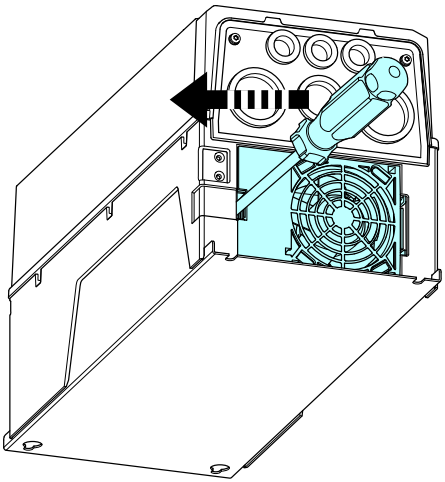

2. **Frame R3:** Insert the sealing plug to the hole shown in the figure.

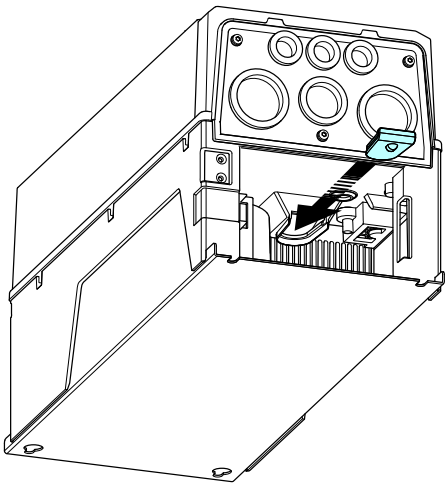

3. **Frame R3:** Reinstall the fan assembly.

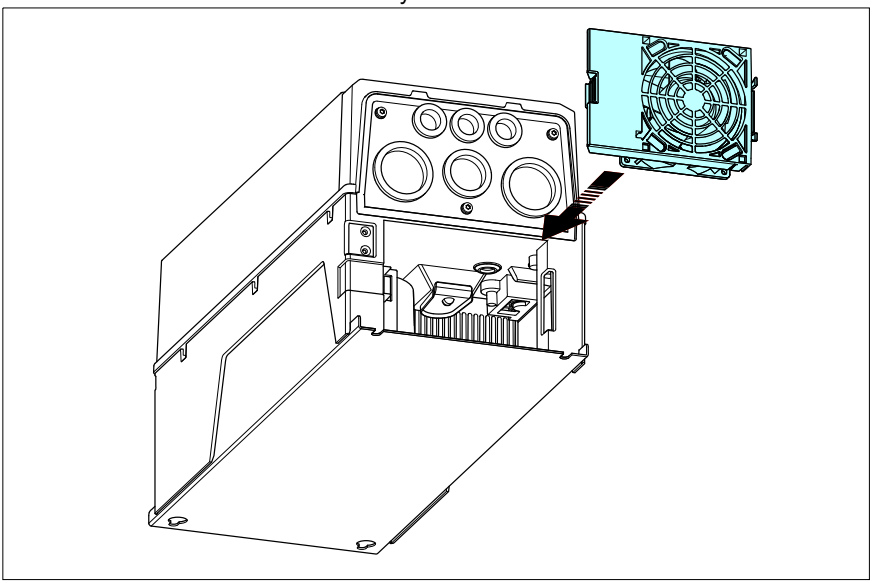

4. **Frame R3:** Attach the top and bottom U-brackets to the drive.

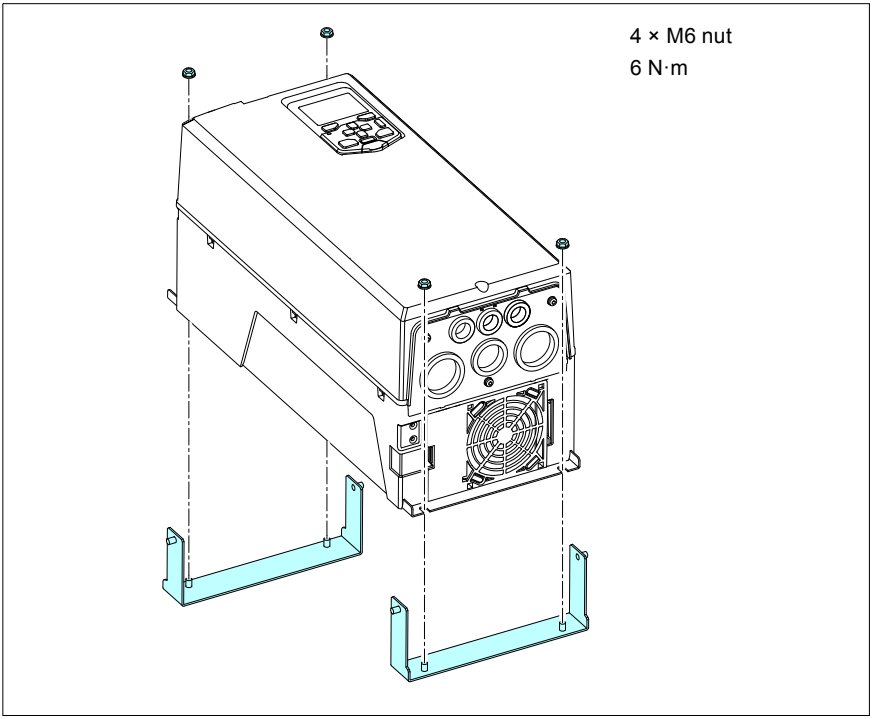

5. **Frame R3:** First attach the side brackets (a) to the top and bottom U-brackets with M6 nuts. Then attach the tightening brackets (b) to the both ends with M5×20 screws.

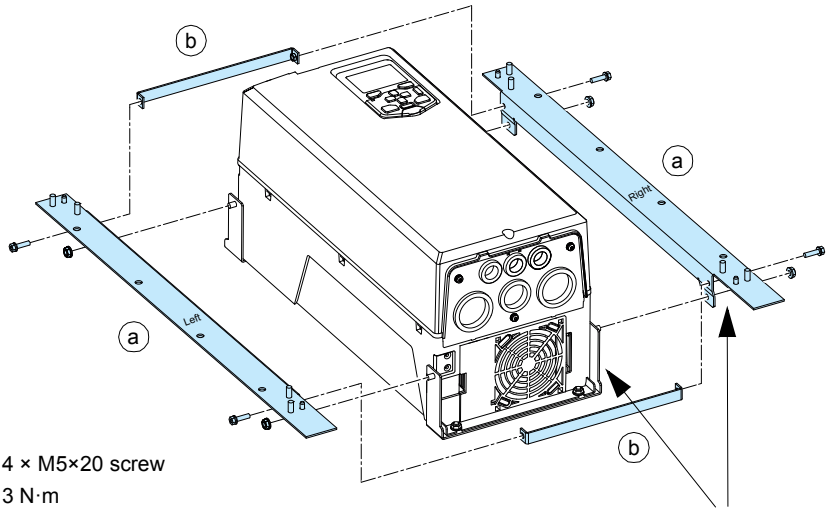

4 × M5×20 screw
3 N·m
R0…R3: 4 × M6 nut
R4…R5: 8 × M6 nut
6 N·m

Note: Attach this end of the side brackets to the bottom U-bracket to make sure that the sealing is tight.

6. **Frame R3:** Attach the top (c) and bottom (d) brackets to the side brackets, first the inner sides of the top and bottom brackets (the sides that touch the drive), then the outer sides. Remove the tightening bracket (e) from the front of the fan.

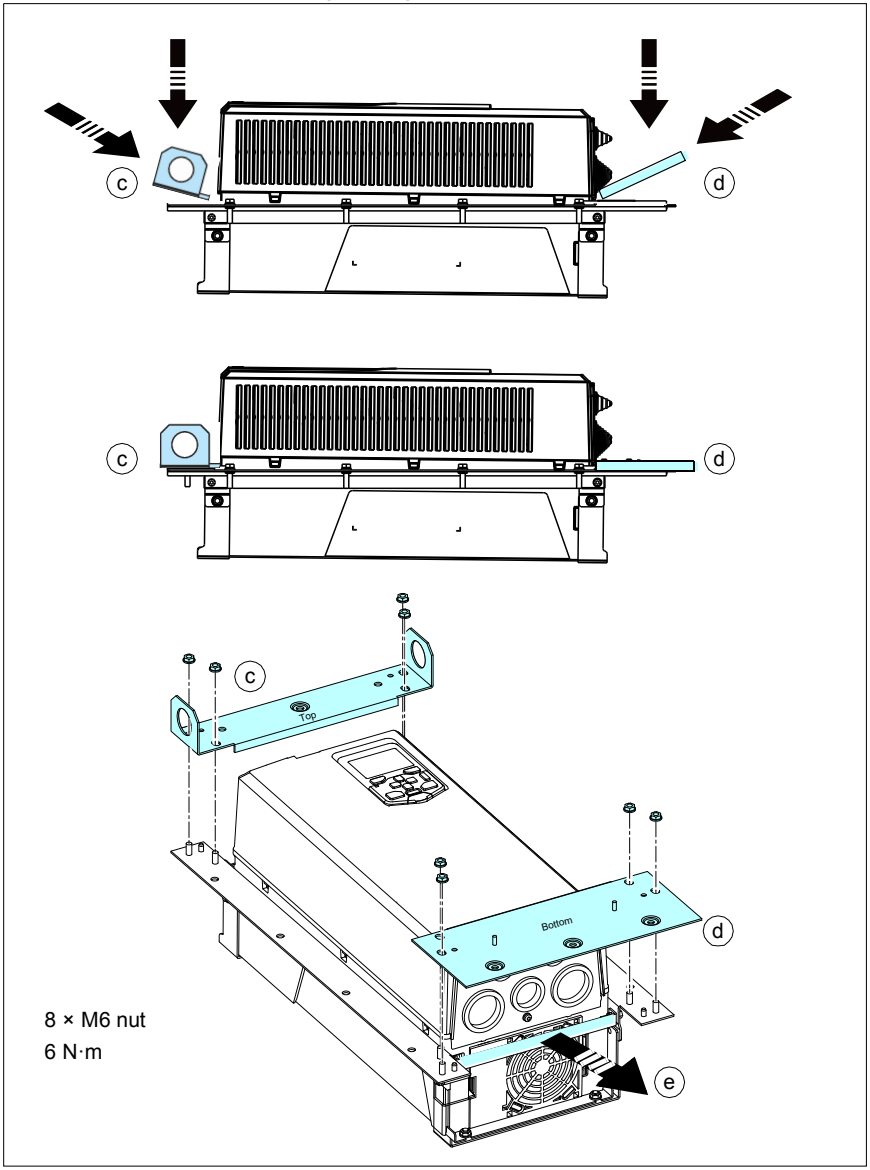

IP21:

- If you use the IP21 cover with the flange mounting kit, install an internal fan (sold separately) to the drive or remove the IP21 cover for ventilation (f).
- If you install an IP21 drive in dry environment, you can leave the cover in place but DO NOT insert the sealing plug.

7. See chapter *Dimension drawings for ACH580-31 and ACQ580-31* for the dimensions of the flange and the required opening in the mounting plate. Attach the mounting template from the flange mounting kit package onto the mounting plate.

   Note: Mounting templates are different (size, number and position of holes) for different frame sizes.

   Note: The delivery does not include Rivet or Kalei nuts for the M6 mounting screws.

   Make the opening and drill the holes for the mounting screws. Consider the hole size for the Rivet or Kalei nuts. Remove the mounting template.

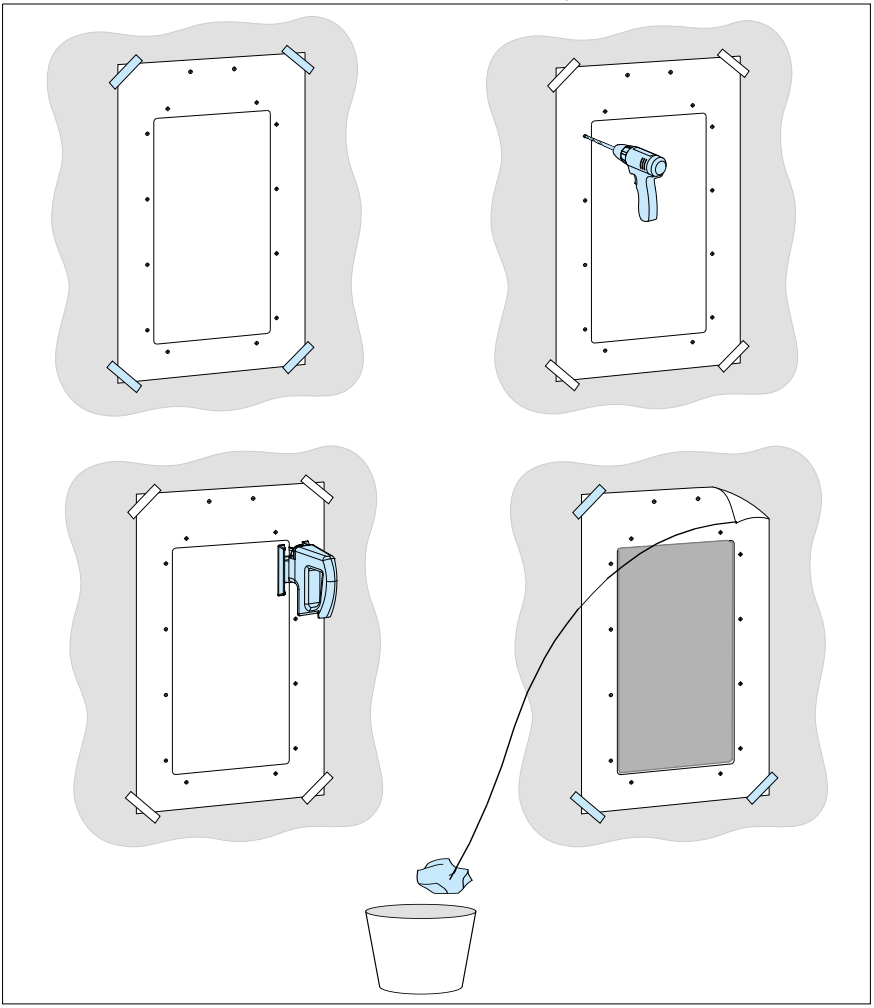

8. Attach chains to the drive lifting holes and lift the drive with a lifting device onto the opening in the mounting plate.
9. Attach the bottom bracket with one screw.
10. Attach the top bracket with one screw.
11. Attach the rest of the mounting screws. Remove the chains.

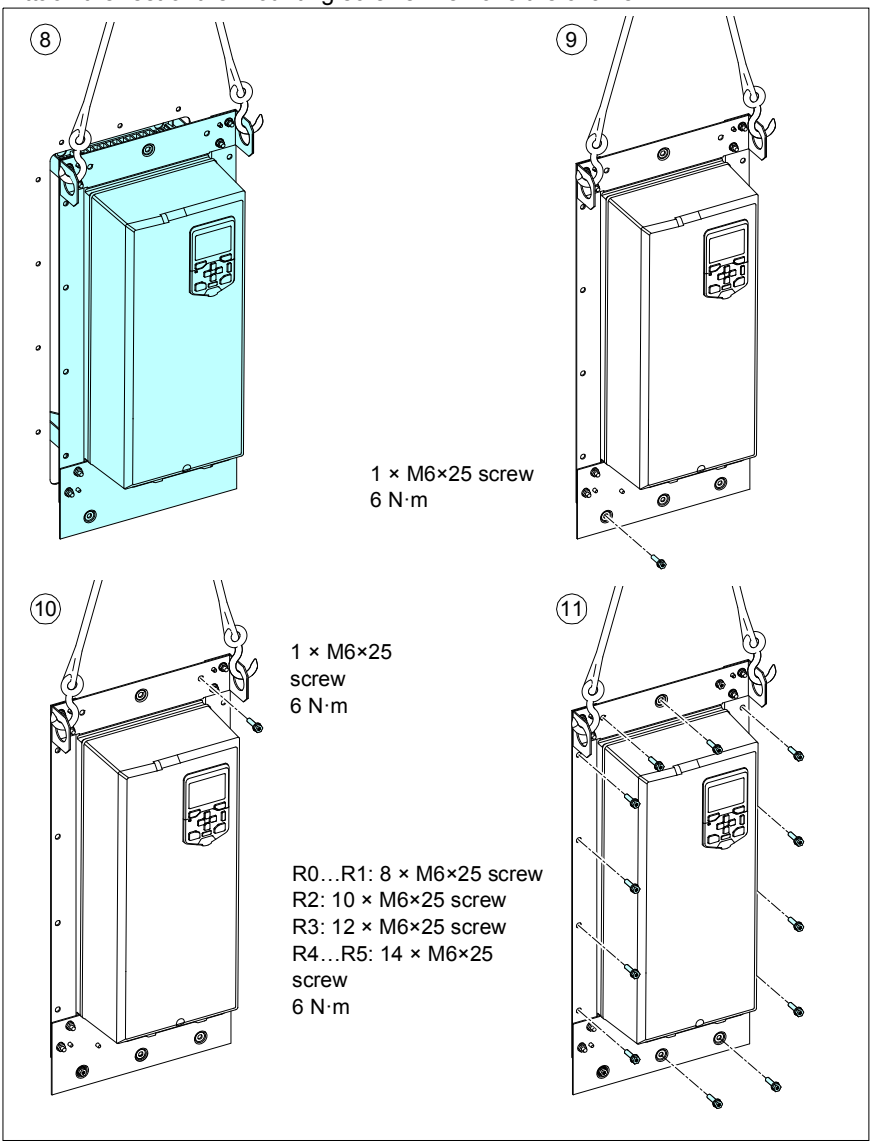

Frames R6 and R8

1. Attach the side brackets of the flange to the drive.

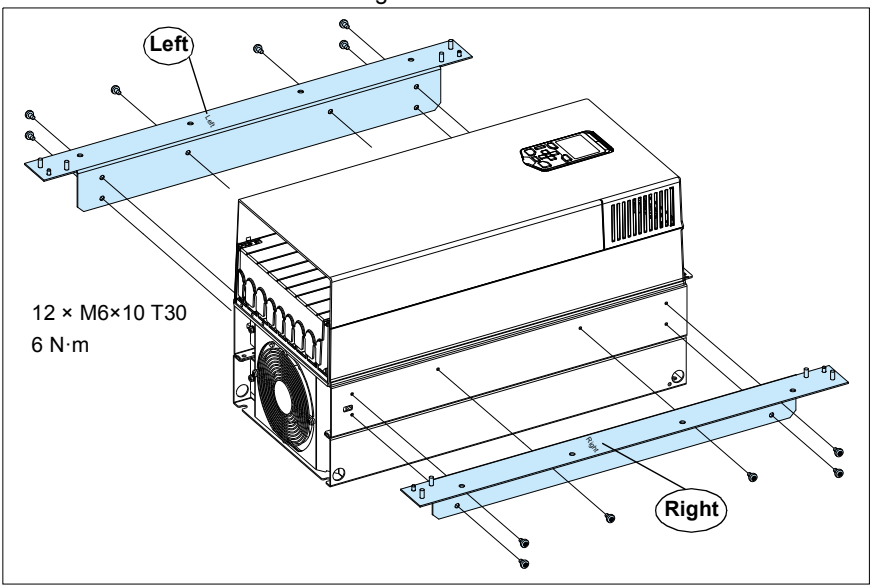

2. Attach the top and bottom brackets.

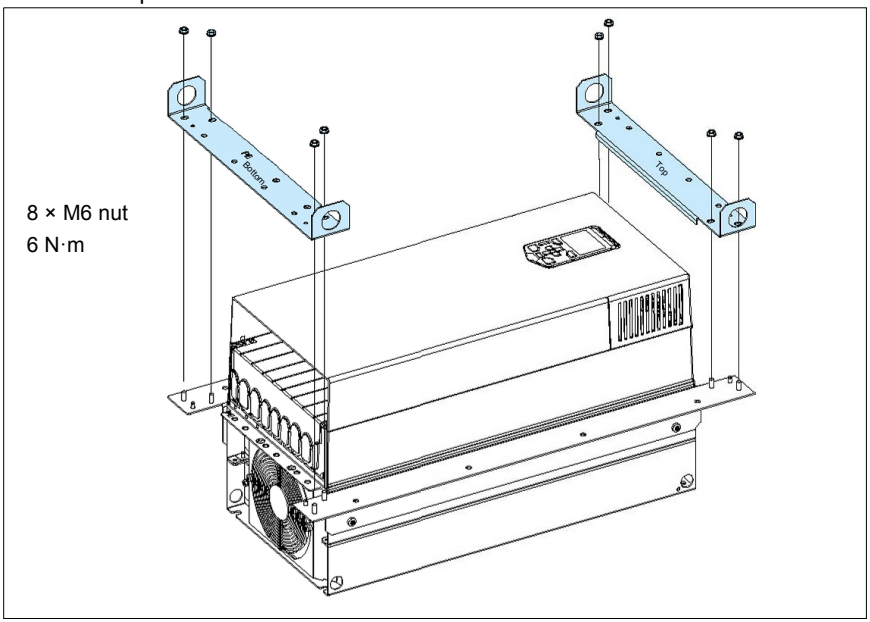

3. See chapter *Dimension drawings for ACH580-31 and ACQ580-31* for the dimensions of the flange and the required opening in the mounting plate.Attach the mounting template from the flange mounting kit package onto the mounting plate.

   Note: The delivery does not include Rivet or Kalei nuts for the M6 mounting screws.

   Make the opening and drill the holes for the mounting screws. Consider the hole size for the Rivet or Kalei nuts. Remove the mounting template.

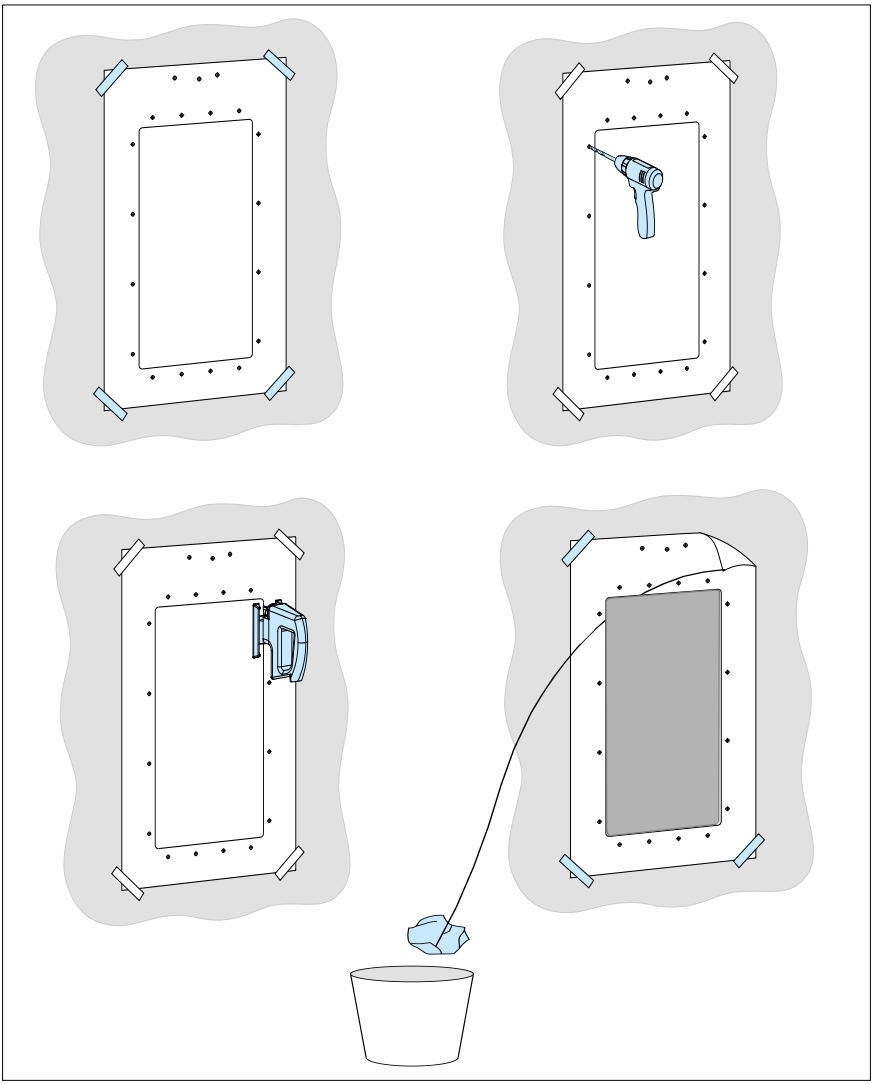

4. **UL Type 12 drives only:** Attach the hood to the cooling channel.

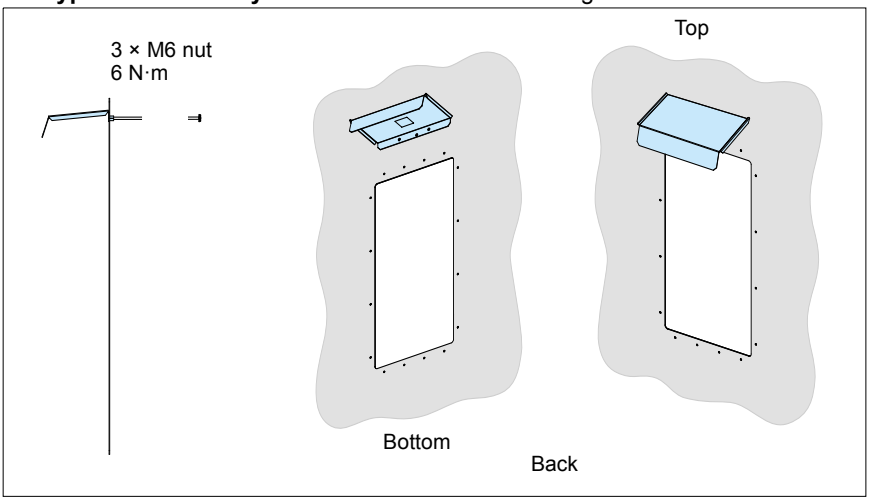

5. Attach the chains to the lifting holes of the flange and lift the drive with a lifting device onto the opening in the mounting plate.

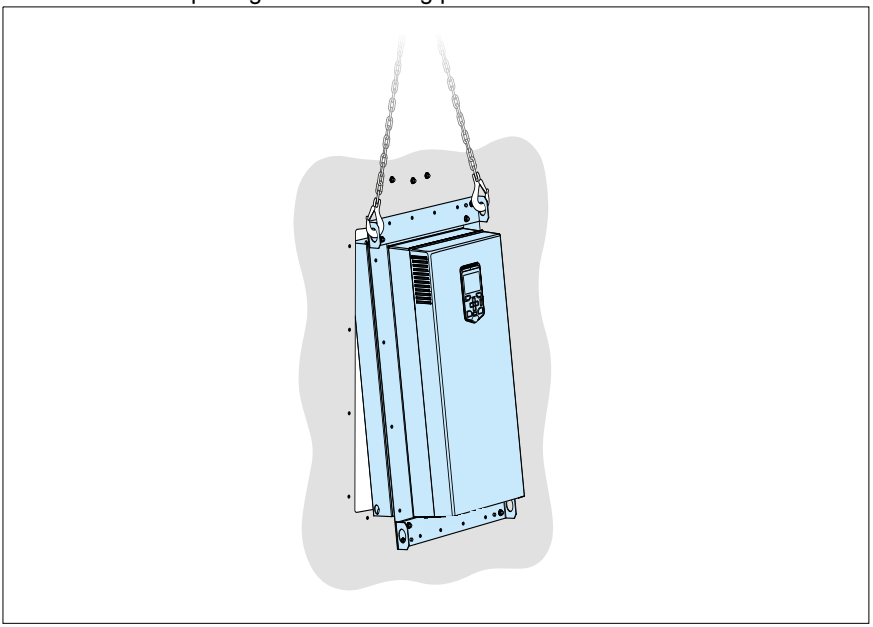

6. Attach the top bracket with one screw.

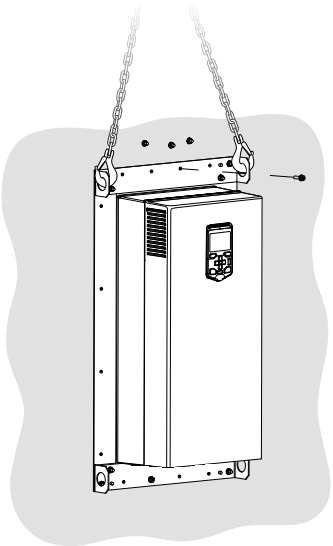

1 × M6×25
6 N·m

7. Attach the bottom bracket with one screw.

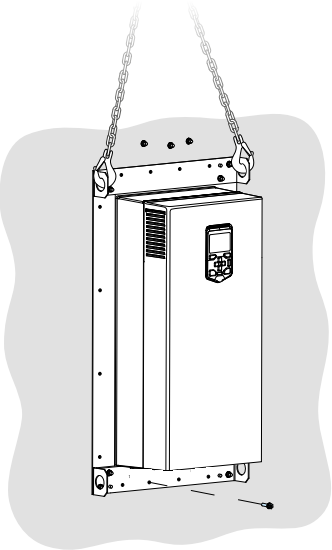

1 × M6×25
6 N·m

8. Attach the rest of the mounting screws. Remove the chains.

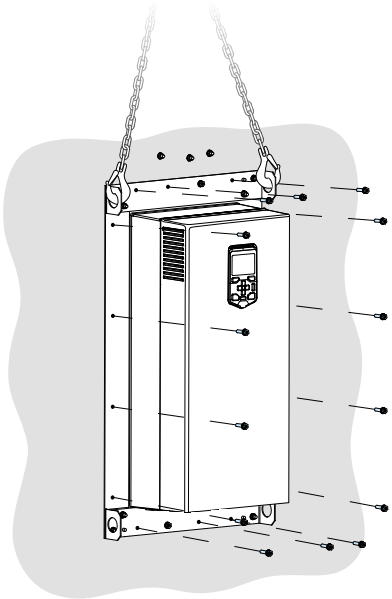

R6…R8:
14 × M6×25
6 N·m

R9:
16 × M6×25
6 N·m

7

Dimension drawings for ACS880-01

Contents of this chapter

This chapter contains the dimension drawings of the flange mounting kits and required openings in the mounting plate.

Frame R1

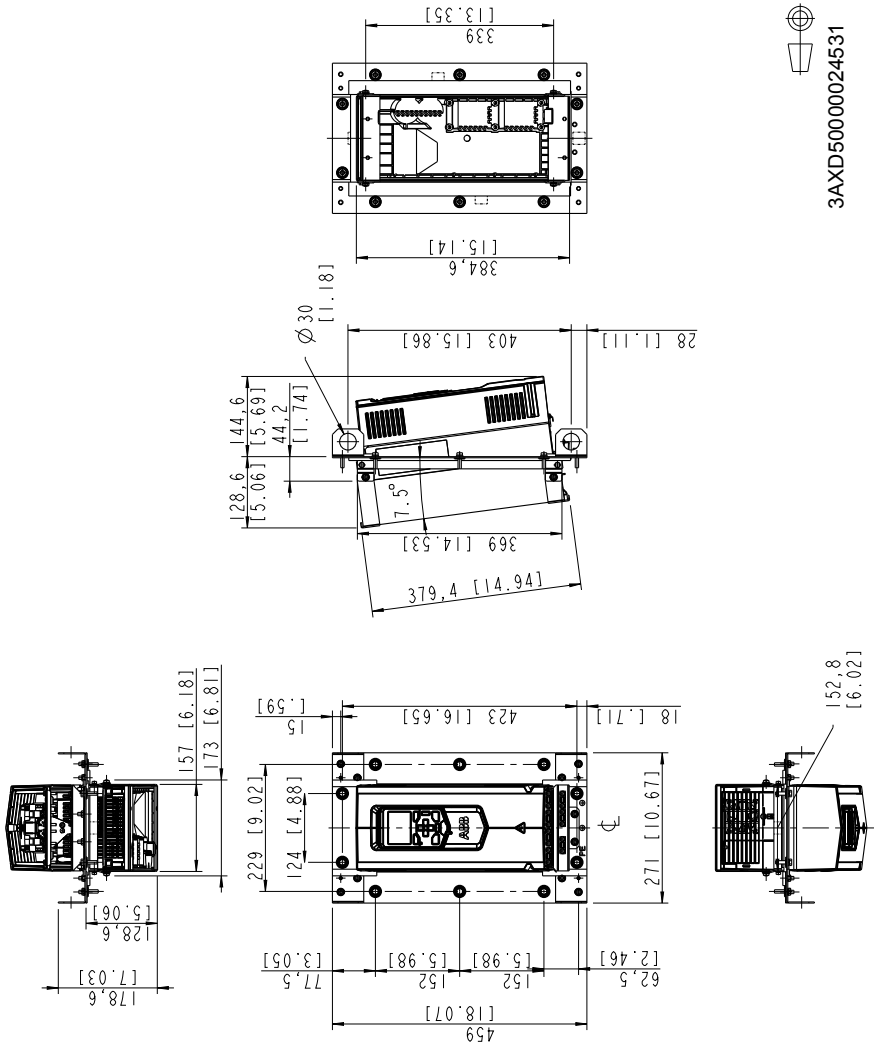
3AXD50000024531
339 [13.35]
384,6 [15.14]
Ø30 [1.18]
403 [15.86]
28 [1.11]
144,6 [5.69]
44,2 [1.74]
128,6 [5.06]
7.5°
369 [14.53]
379,4 [14.94]
157 [6.18]
173 [6.81]
15 [.59]
423 [16.65]
18 [.71]
152,8 [6.02]
229 [9.02]
124 [4.88]
271 [10.67]
128,6 [5.06]
178,6 [7.03]
77,5 [3.05]
152 [5.98]
152 [5.98]
62,5 [2.46]
459 [18.07]

Attaching points and hole dimensions

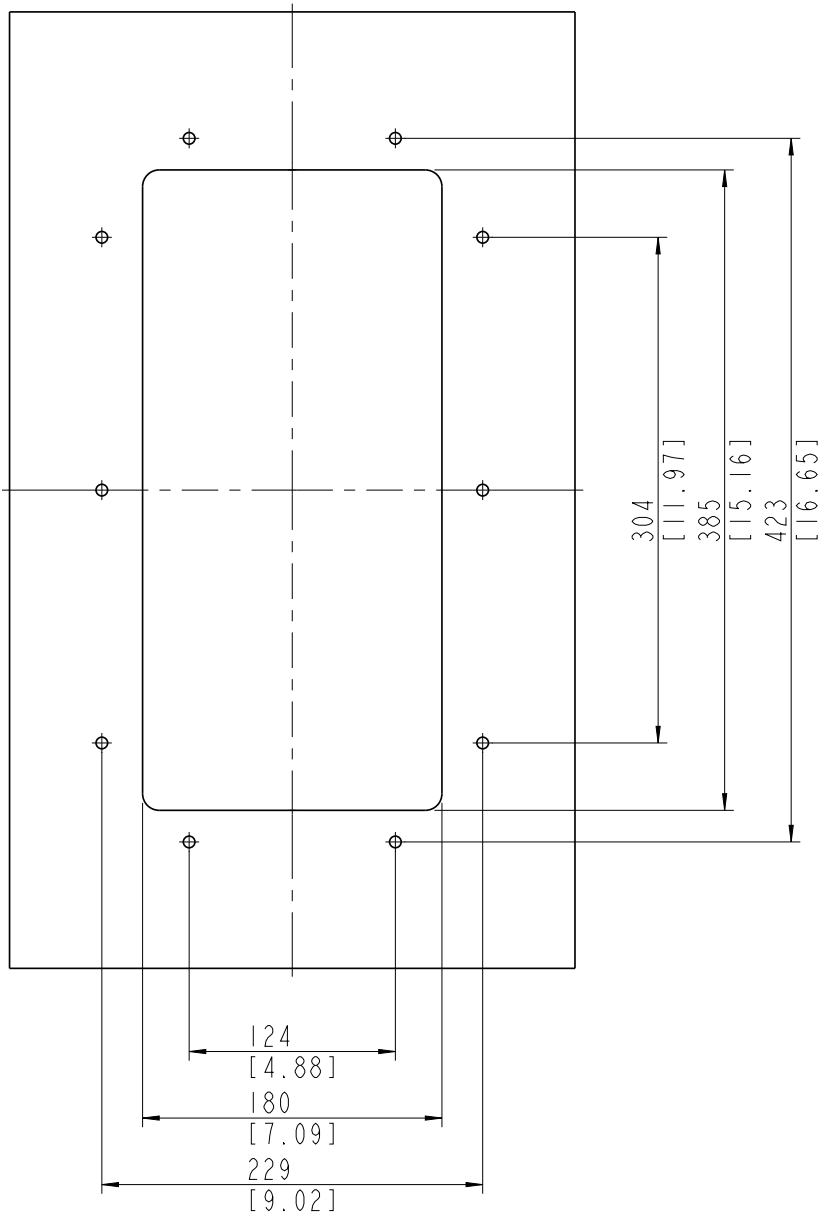

3AXD50000024858

Frame R2

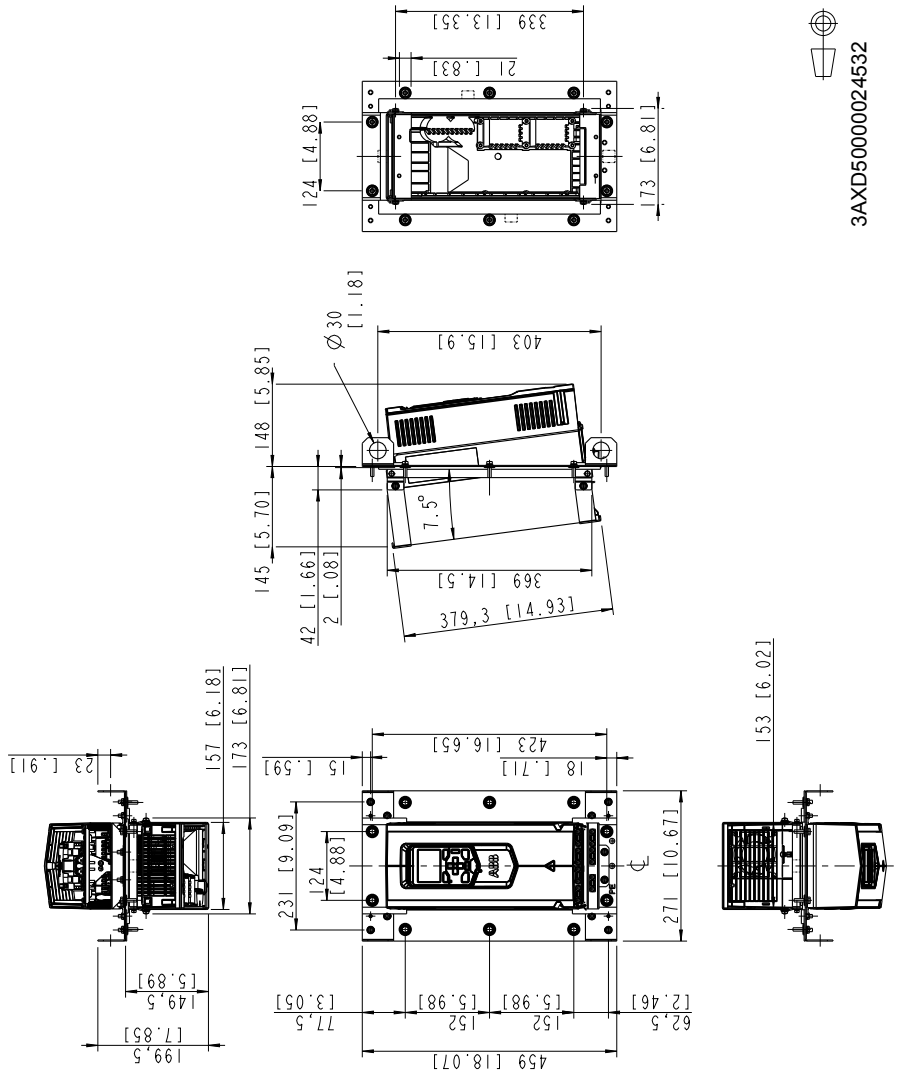
3AXD50000024532
339 [13.35]
21 [.83]
124 [4.88]
173 [6.81]
Ø 30 [1.18]
403 [15.9]
148 [5.85]
7.5°
145 [5.70]
42 [1.66]
2 [.08]
369 [14.5]
379,3 [14.93]
153 [6.02]
23 [.91]
157 [6.18]
173 [6.81]
423 [16.65]
15 [.59]
18 [.71]
231 [9.09]
124 [4.88]
271 [10.67]
149,5 [5.89]
199,5 [7.85]
77,5 [3.05]
152 [5.98]
152 [5.98]
62,5 [2.46]
459 [18.07]

Attaching points and hole dimensions

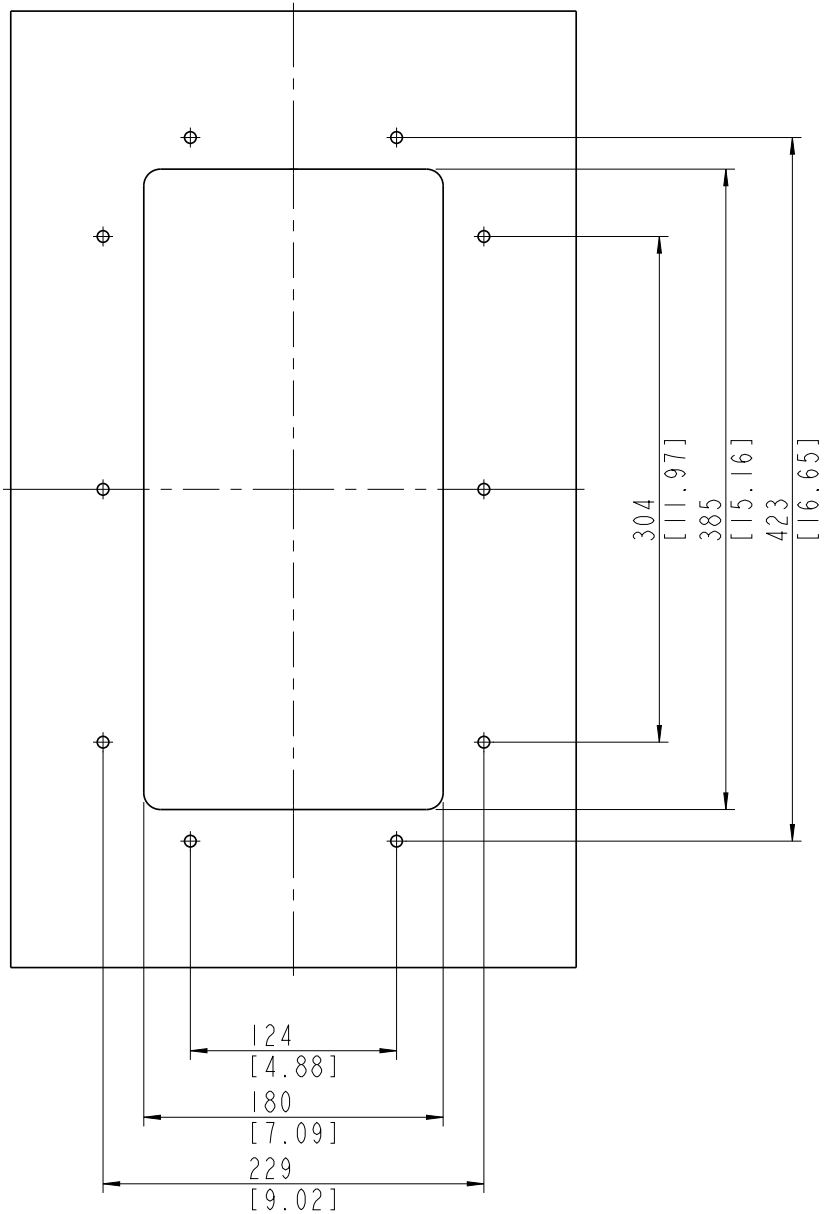

3AXD50000024859

Frame R3

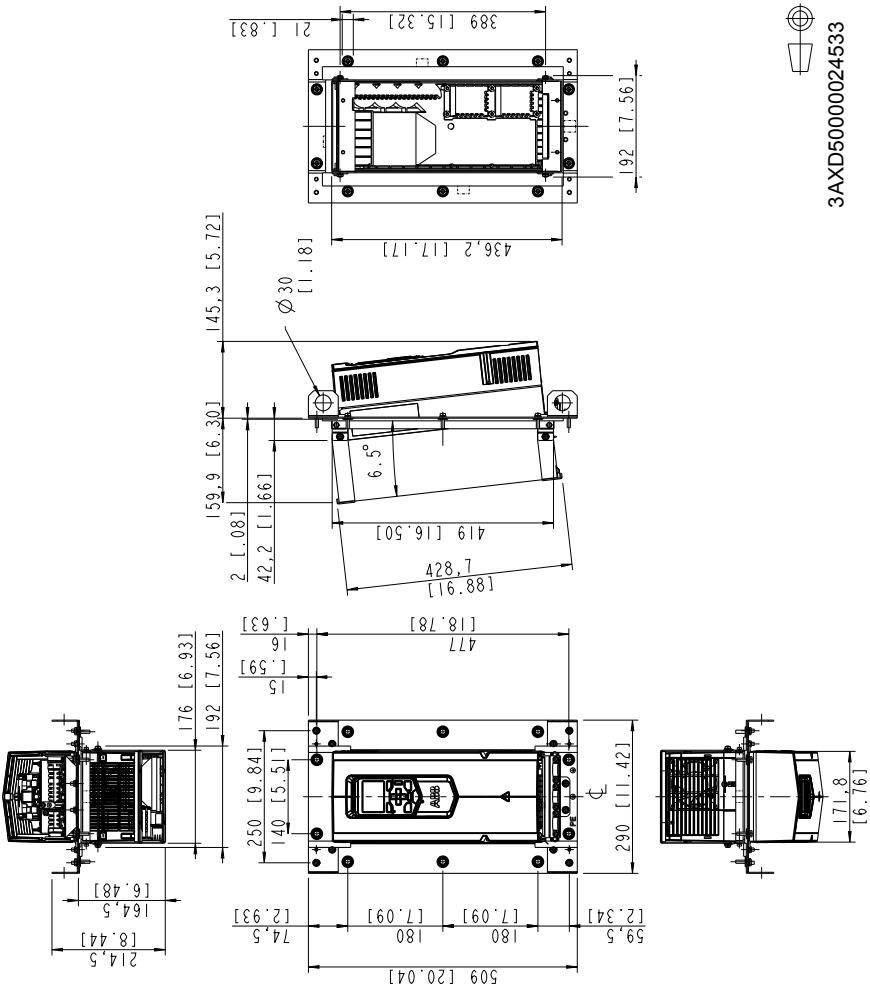
3AXD50000024533
21 [.83]
389 [15.32]
192 [7.56]
436,2 [17.17]
145,3 [5.72]
Ø30 [1.18]
159,9 [6.30]
6.5°
2 [.08]
42,2 [1.66]
419 [16.50]
428,7 [16.88]
[.63]
16
[.59]
15
477 [18.78]
176 [6.93]
192 [7.56]
250 [9.84]
140 [5.51]
290 [11.42]
171,8 [6.76]
164,5 [6.48]
214,5 [8.44]
74,5 [2.93]
180 [7.09]
180 [7.09]
59,5 [2.34]
509 [20.04]

Attaching points and hole dimensions

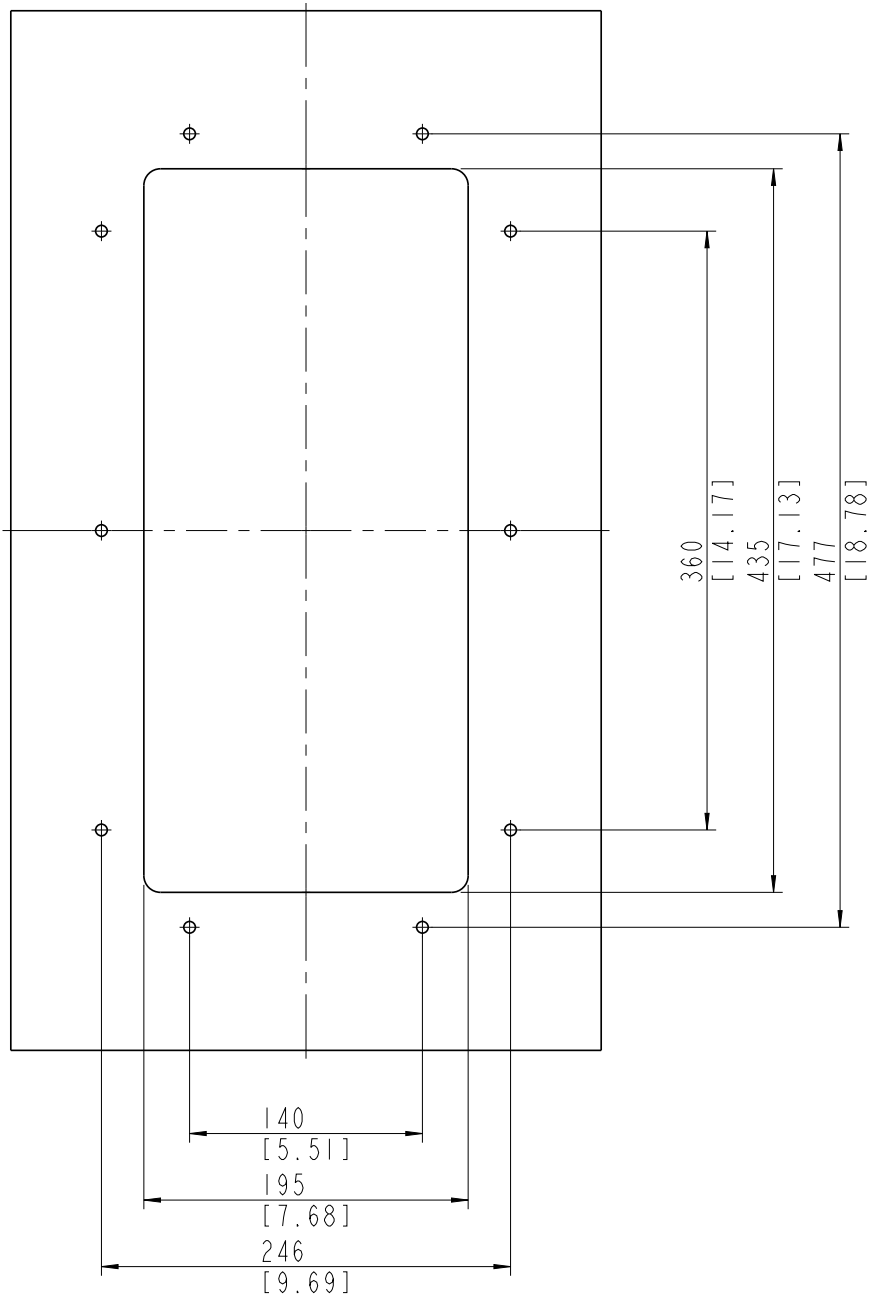

3AXD50000024860

Frame R4

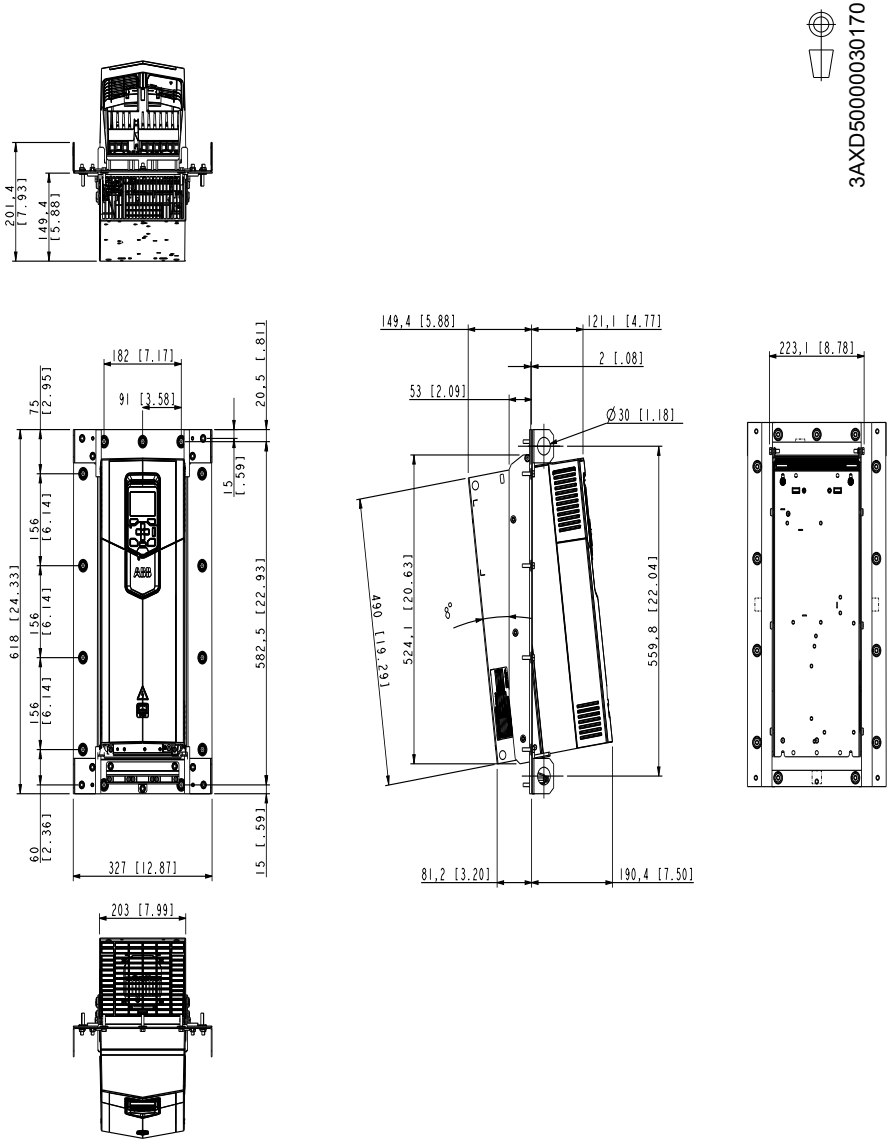
3AXD50000030170
201,4 [7.93]
149,4 [5.88]
182 [7.17]
91 [3.58]
75 [2.95]
20,5 [.81]
15 [.59]
156 [6.14]
156 [6.14]
156 [6.14]
618 [24.33]
582,5 [22.93]
60 [2.36]
15 [.59]
327 [12.87]
203 [7.99]
149,4 [5.88]
121,1 [4.77]
2 [.08]
53 [2.09]
Ø30 [1.18]
490 [19.29]
524,1 [20.63]
559,8 [22.04]
81,2 [3.20]
190,4 [7.50]
223,1 [8.78]

Hood is needed for UL Type 12 drives only

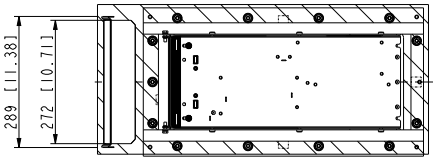

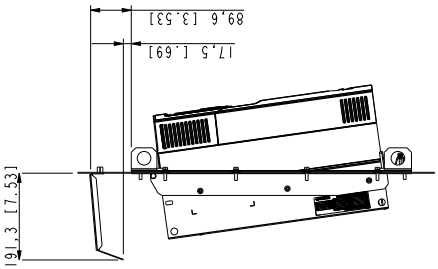

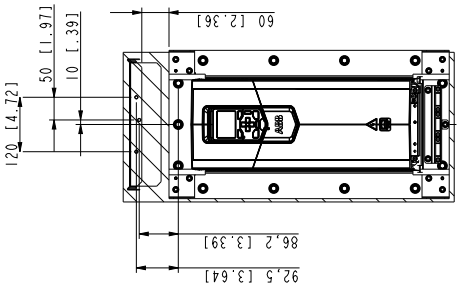

3AXD50000030170

Attaching points and hole dimensions

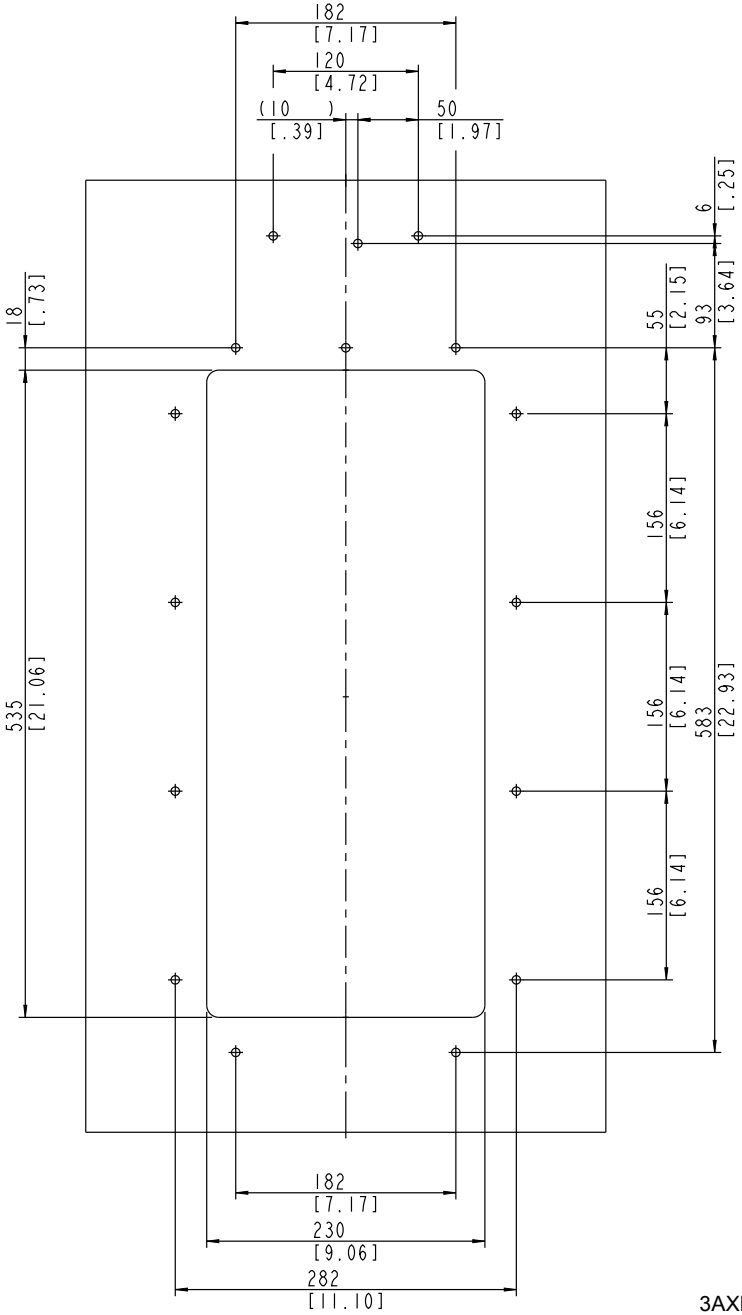

3AXD50000027190

Frame R5

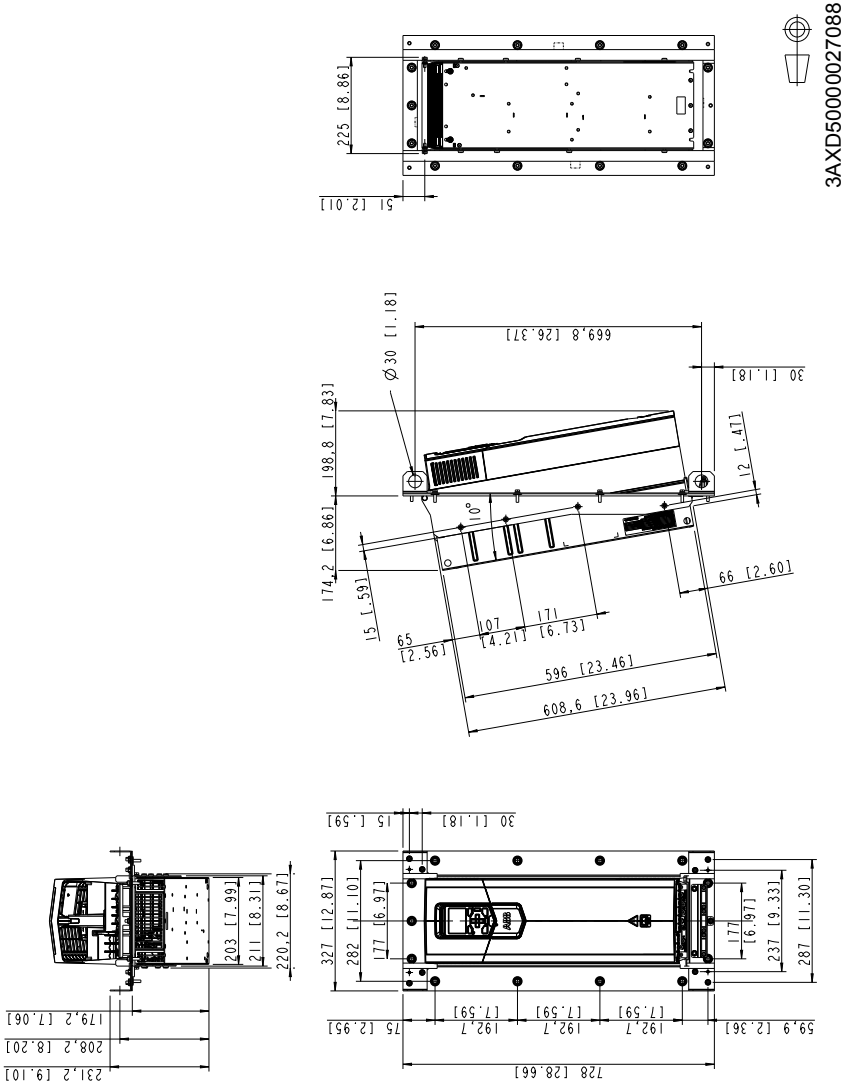
3AXD50000027088
51 [2.01]
225 [8.86]
Ø30 [1.18]
669,8 [26.37]
30 [1.18]
198,8 [7.83]
12 [.47]
174,2 [6.86]
10°
66 [2.60]
15 [.59]
65 [2.56]
107 [4.21]
171 [6.73]
596 [23.46]
608,6 [23.96]
15 [.59]
30 [1.18]
327 [12.87]
282 [11.10]
177 [6.97]
177 [6.97]
237 [9.33]
287 [11.30]
75 [2.95]
192,7 [7.59]
192,7 [7.59]
192,7 [7.59]
59,9 [2.36]
728 [28.66]
203 [7.99]
211 [8.31]
220,2 [8.67]
179,2 [7.06]
208,2 [8.20]
231,2 [9.10]

Hood is needed for UL Type 12 drives only

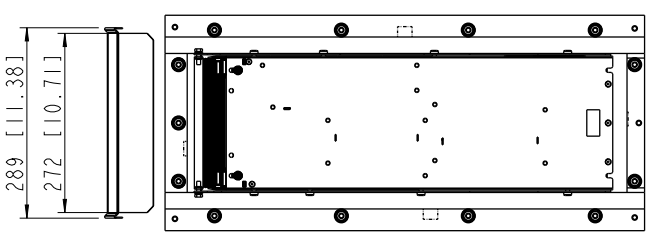

3AXD50000027088

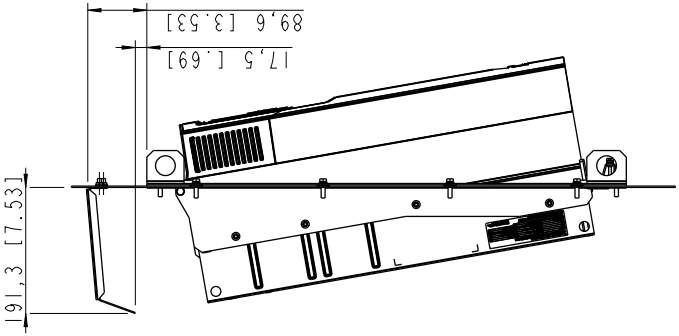

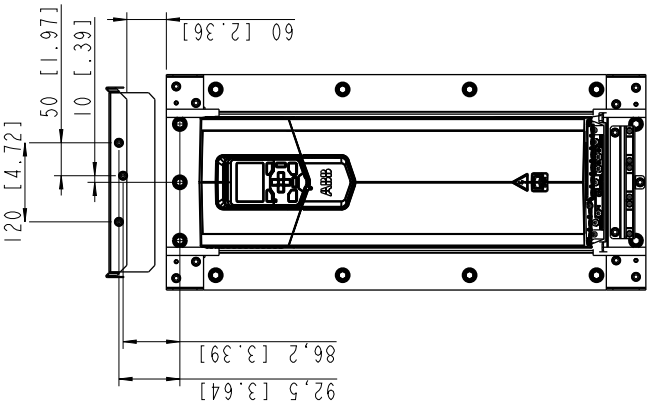

Attaching points and hole dimensions

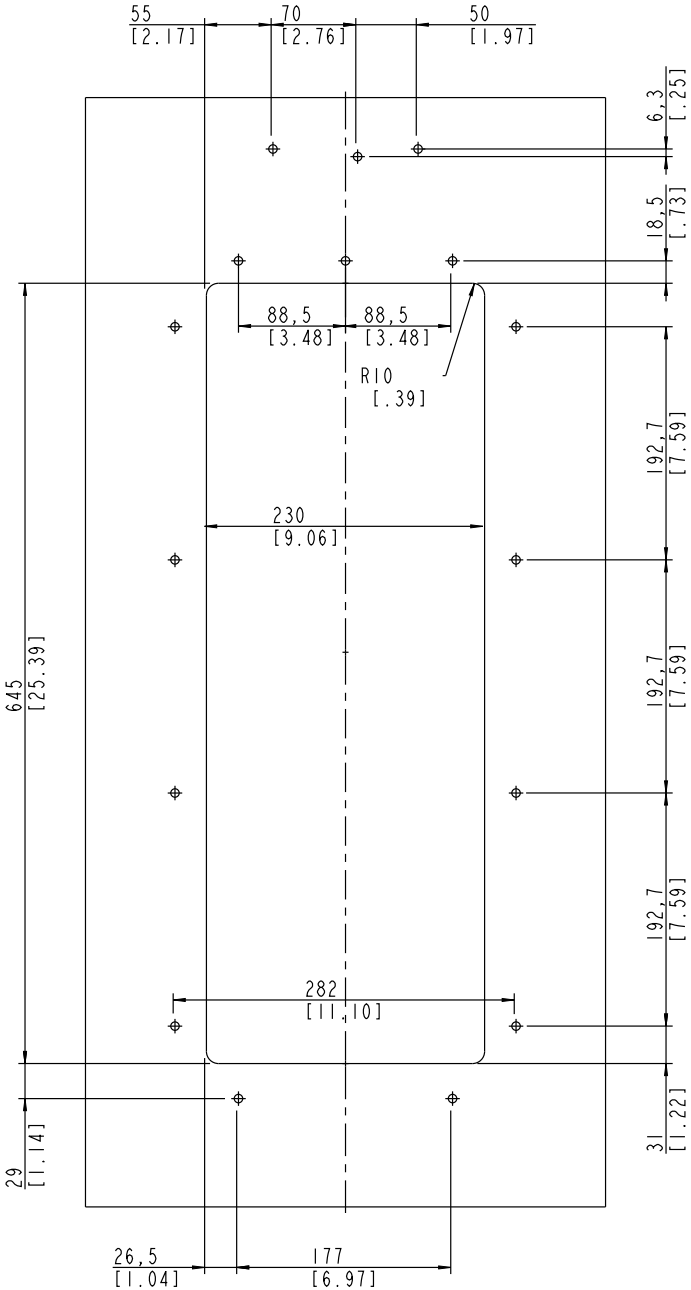

3AXD50000018602

Frame R6

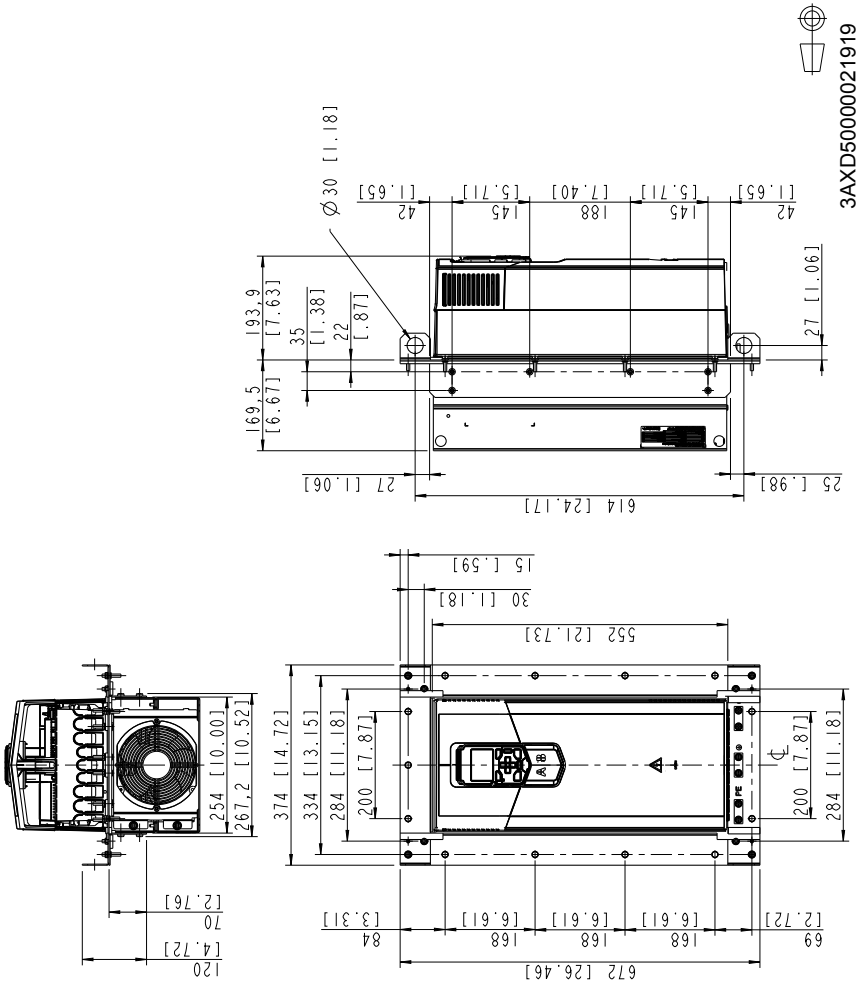
3AXD50000021919
Ø30 [1.18]
42 [1.65]
145 [5.71]
188 [7.40]
145 [5.71]
42 [1.65]
193,9 [7.63]
35 [1.38]
22 [.87]
169,5 [6.67]
27 [1.06]
27 [1.06]
614 [24.17]
25 [.98]
15 [.59]
30 [1.18]
552 [21.73]
374 [14.72]
334 [13.15]
284 [11.18]
200 [7.87]
254 [10.00]
267,2 [10.52]
200 [7.87]
284 [11.18]
70 [2.76]
120 [4.72]
84 [3.31]
168 [6.61]
168 [6.61]
168 [6.61]
69 [2.72]
672 [26.46]

Hood is needed for UL Type 12 drives only

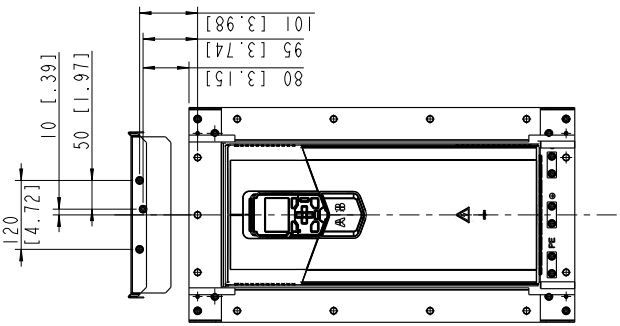

3AXD50000021919

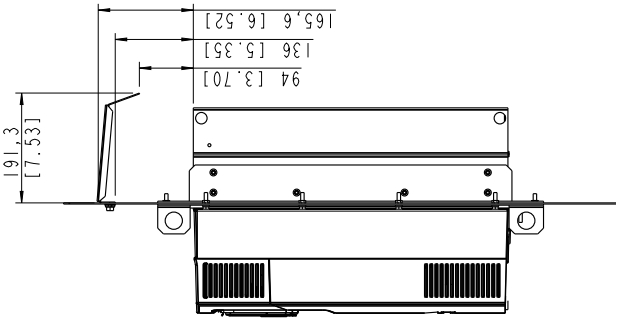

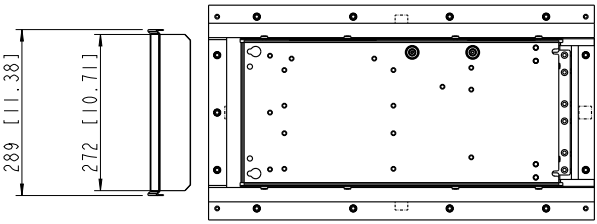

Attaching points and hole dimensions

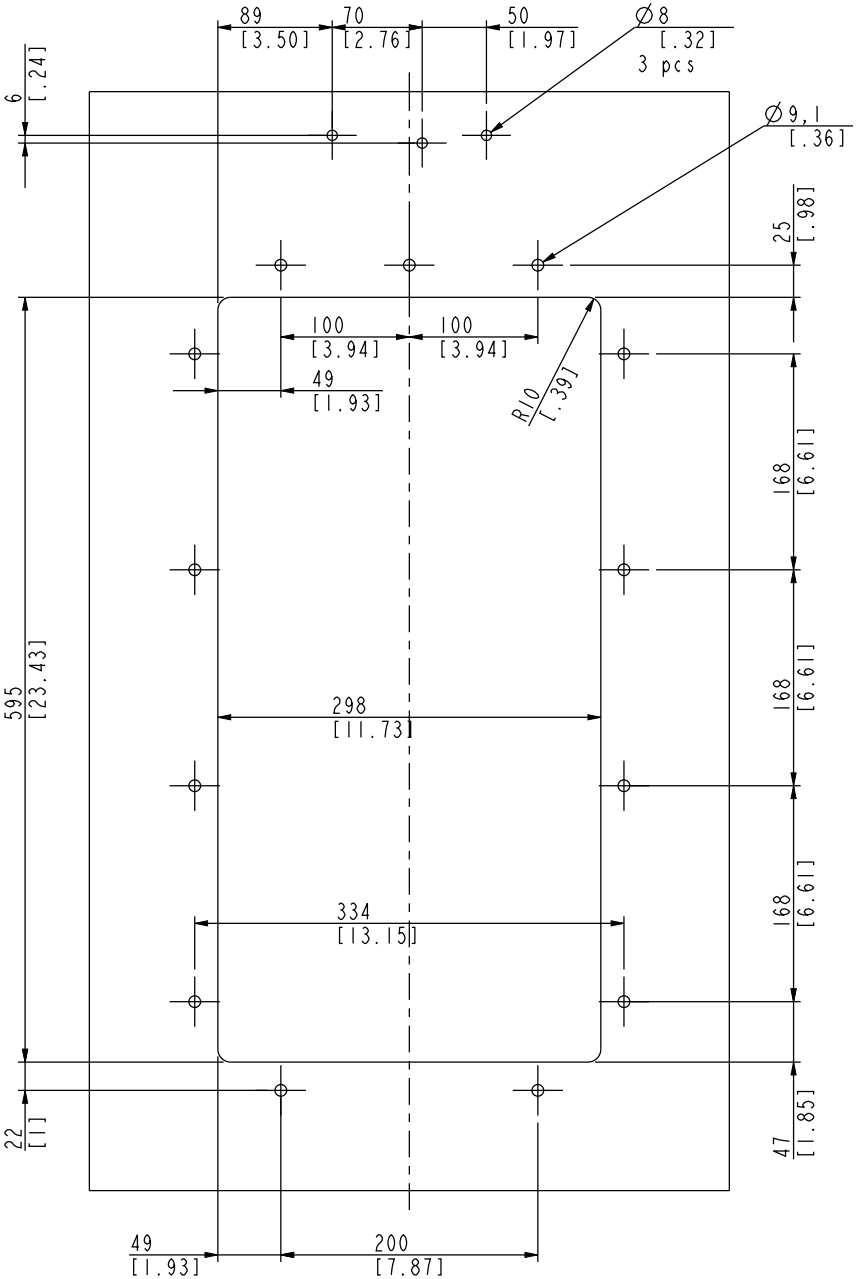

3AXD50000019323

Frame R7

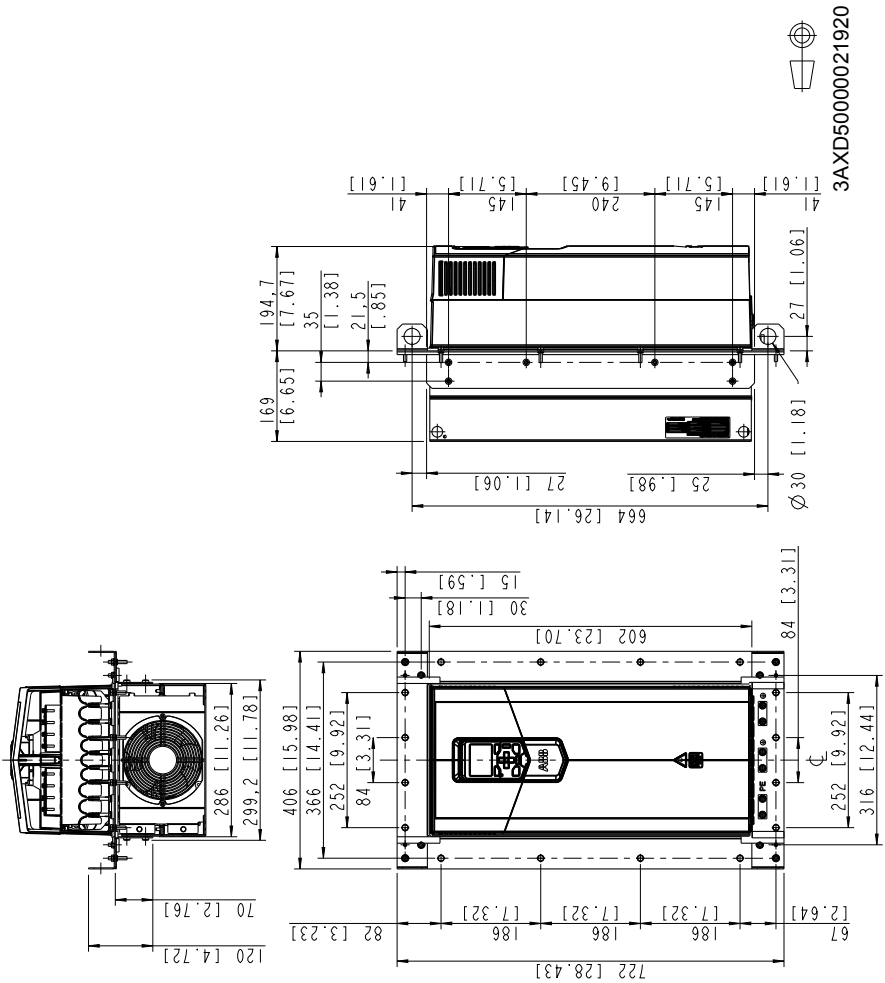
3AXD50000021920
41 [1.61]
145 [5.71]
240 [9.45]
145 [5.71]
41 [1.61]
27 [1.06]
194,7 [7.67]
35 [1.38]
21,5 [.85]
169 [6.65]
30 [1.18]
Ø
25 [.98]
27 [1.06]
664 [26.14]
15 [.59]
30 [1.18]
602 [23.70]
84 [3.31]
406 [15.98]
366 [14.41]
252 [9.92]
84 [3.31]
252 [9.92]
316 [12.44]
286 [11.26]
299,2 [11.78]
70 [2.76]
120 [4.72]
82 [3.23]
186 [7.32]
186 [7.32]
186 [7.32]
67 [2.64]
722 [28.43]

Hood is needed for UL Type 12 drives only

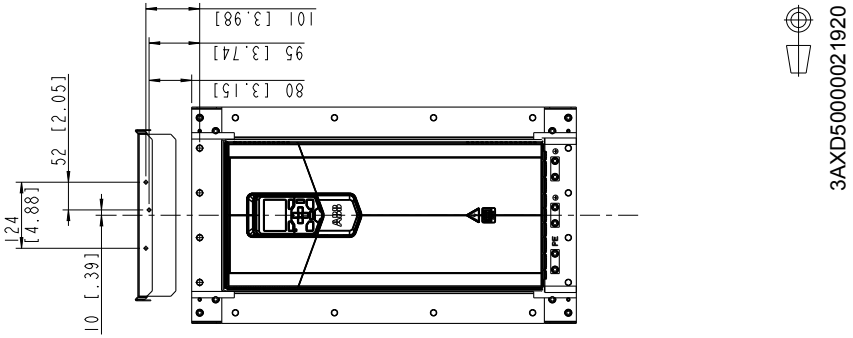

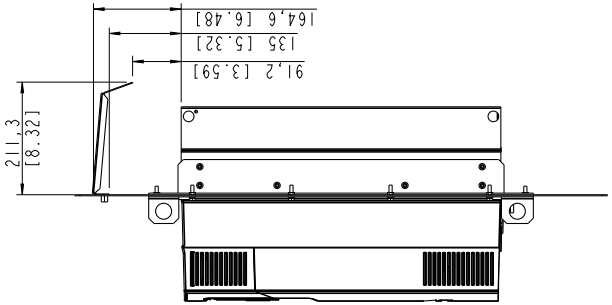

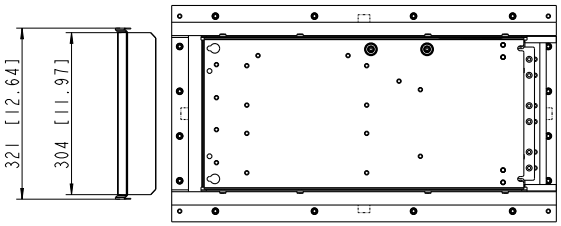

Attaching points and hole dimensions

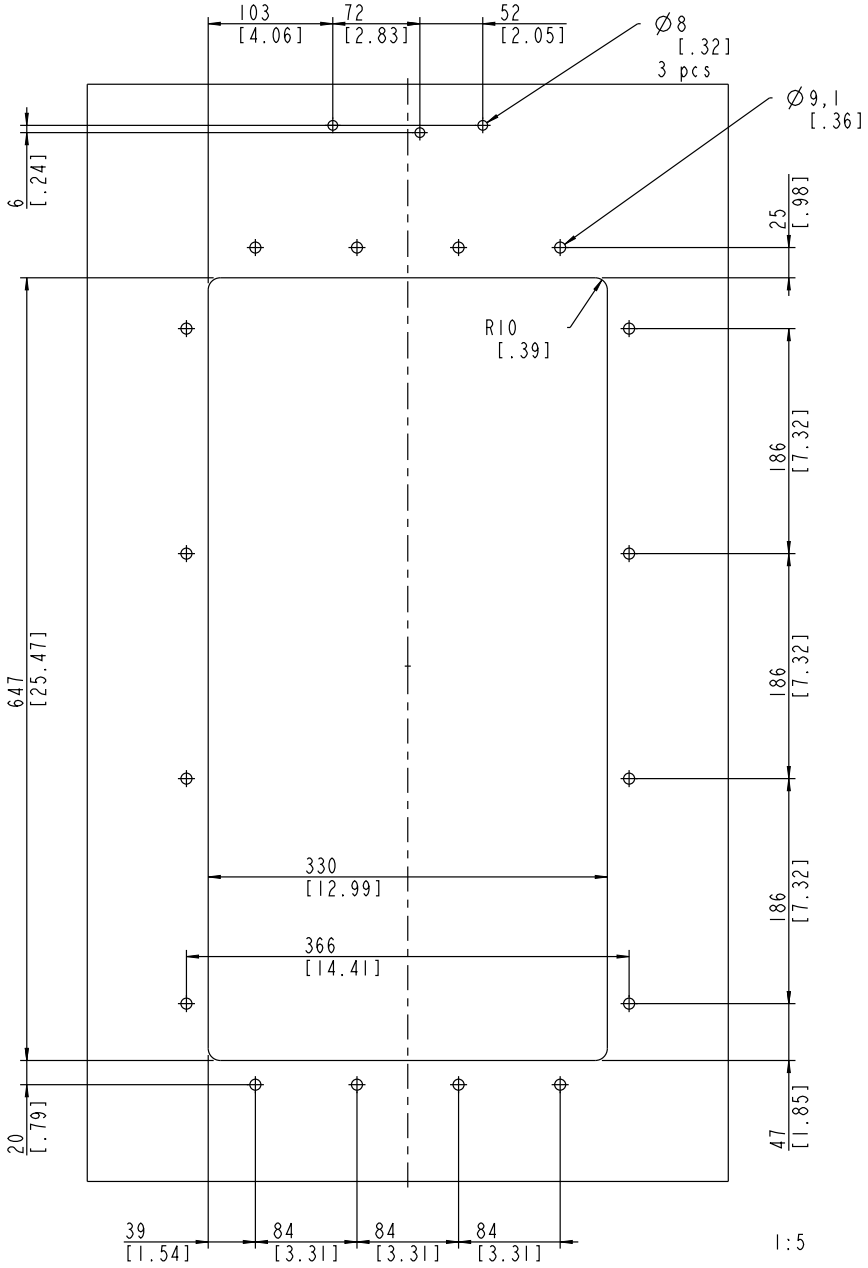

3AXD50000019324

Frame R8

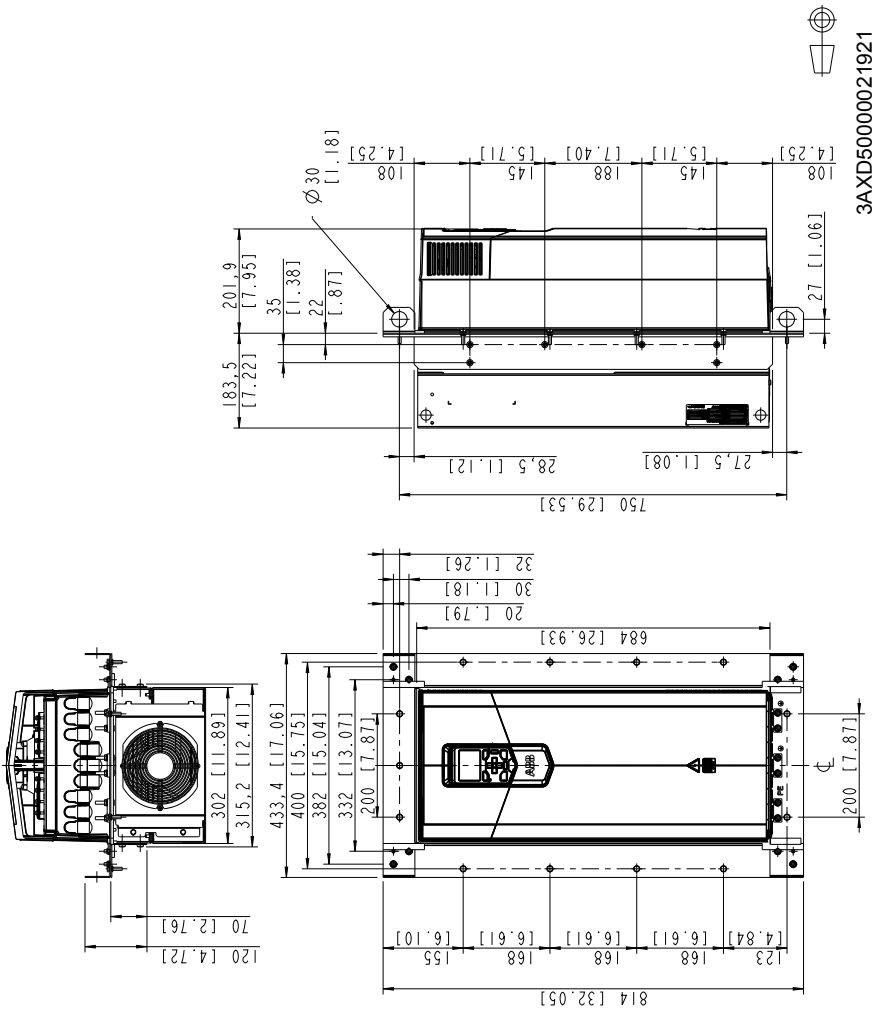
3AXD50000021921
108 [4.25]
145 [5.71]
188 [7.40]
145 [5.71]
108 [4.25]
Ø30 [1.18]
201,9 [7.95]
35 [1.38]
22 [.87]
183,5 [7.22]
27 [1.06]
28,5 [1.12]
27,5 [1.08]
750 [29.53]
32 [1.26]
30 [1.18]
20 [.79]
684 [26.93]
433,4 [17.06]
400 [15.75]
382 [15.04]
332 [13.07]
200 [7.87]
302 [11.89]
315,2 [12.41]
200 [7.87]
70 [2.76]
120 [4.72]
155 [6.10]
168 [6.61]
168 [6.61]
168 [6.61]
123 [4.84]
814 [32.05]

Hood is needed for UL Type 12 drives only

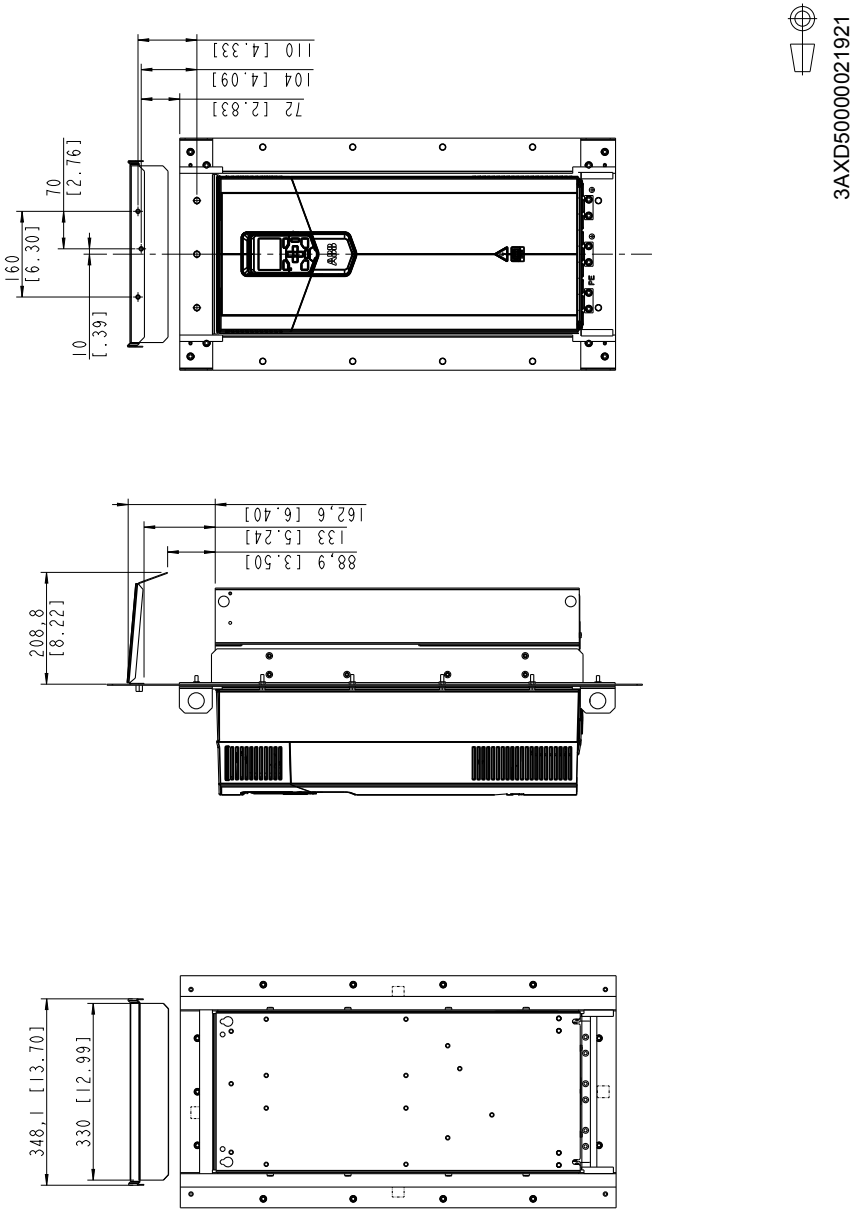

Attaching points and hole dimensions

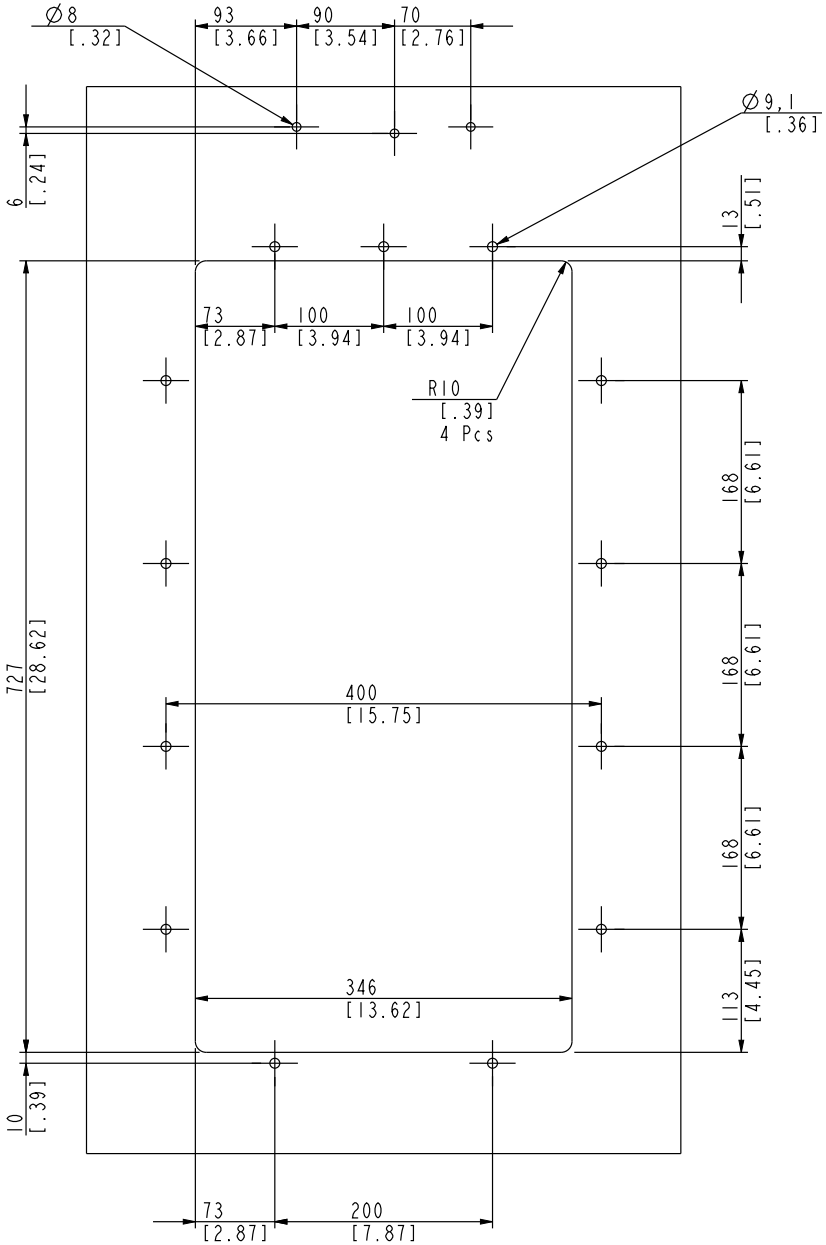

3AXD50000019325

Frame R9

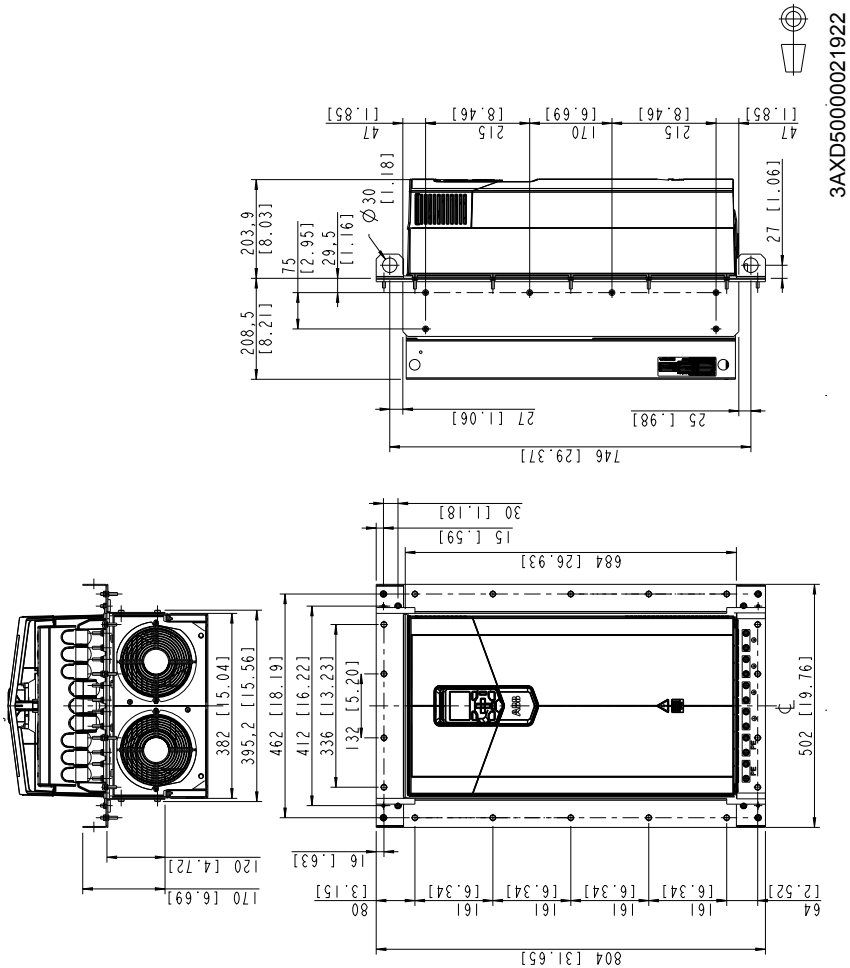
3AXD50000021922
47 [1.85]
215 [8.46]
170 [6.69]
215 [8.46]
47 [1.85]
203,9 [8.03]
75 [2.95]
29,5 [1.16]
Ø30 [1.18]
27 [1.06]
208,5 [8.21]
27 [1.06]
25 [.98]
746 [29.37]
30 [1.18]
15 [.59]
684 [26.93]
382 [15.04]
395,2 [15.56]
462 [18.19]
412 [16.22]
336 [13.23]
132 [5.20]
502 [19.76]
16 [.63]
120 [4.72]
170 [6.69]
80 [3.15]
161 [6.34]
161 [6.34]
161 [6.34]
161 [6.34]
64 [2.52]
804 [31.65]

Hood is needed for UL Type 12 drives only

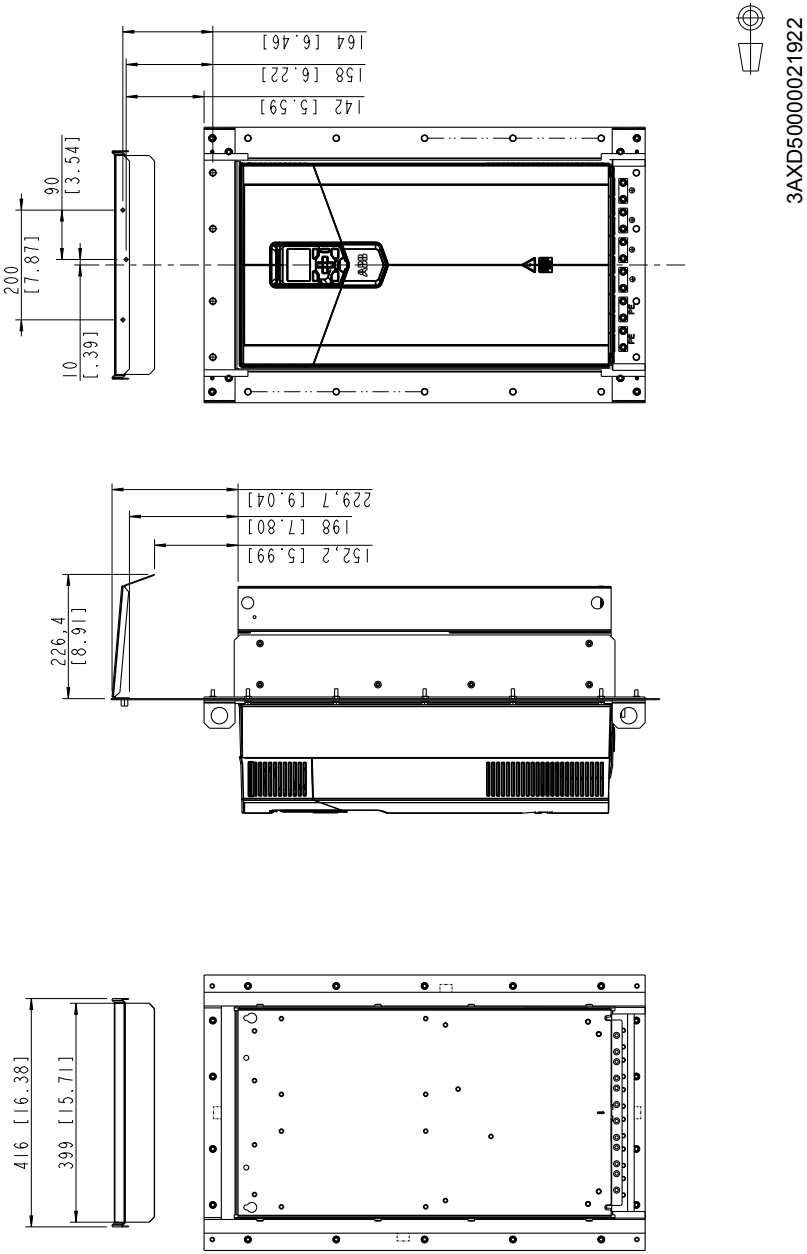

Attaching points and hole dimensions

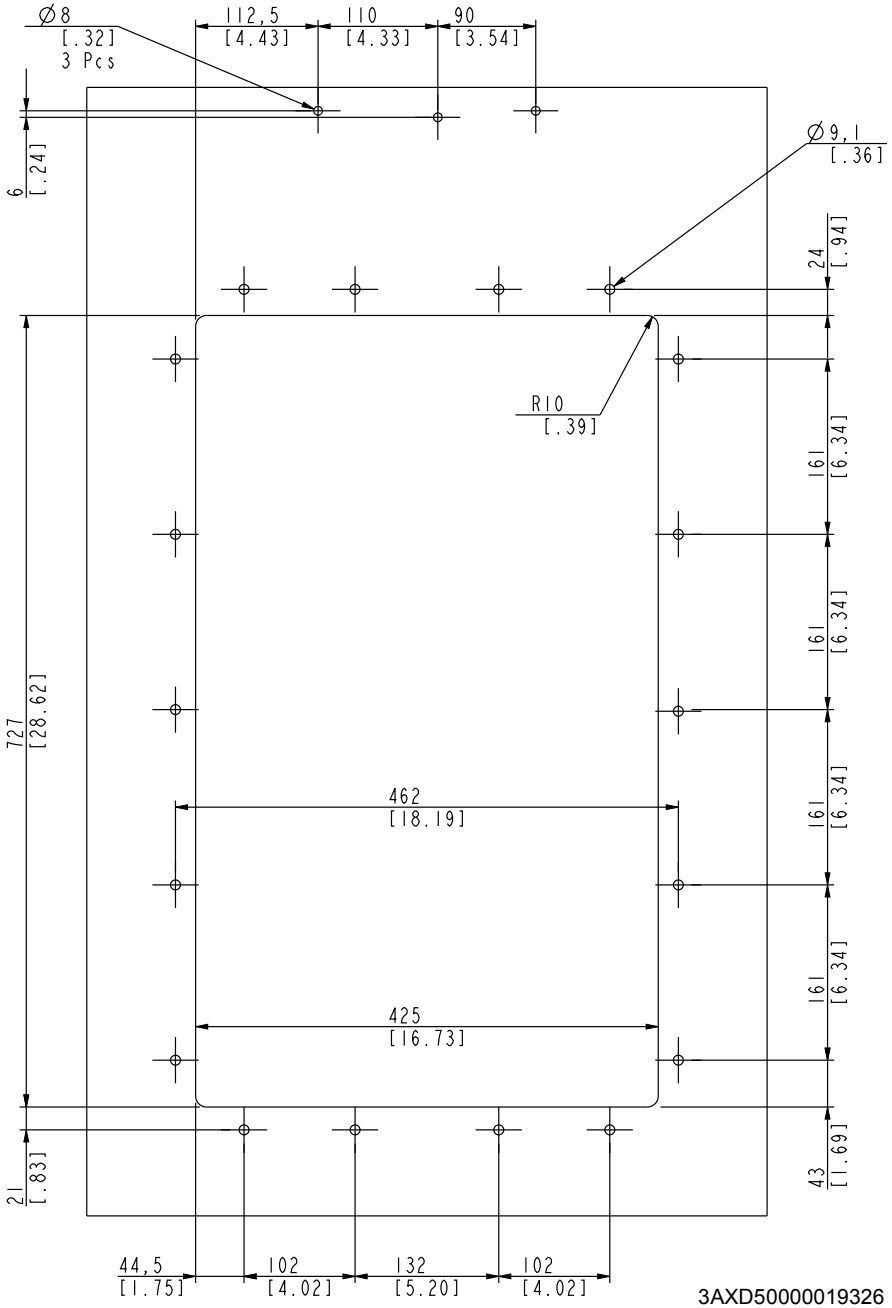

8

Dimension drawings for ACS580-01, ACH580-01 and ACQ580-01

Contents of this chapter

This chapter contains the dimension drawings of the flange mounting kits and required openings in the mounting plate.

Frame R0

For ACS580-01, ACH580-01 and ACQ580-01 types -02A6-4, -03A3-4, -04A0-4 and -05A6-4.

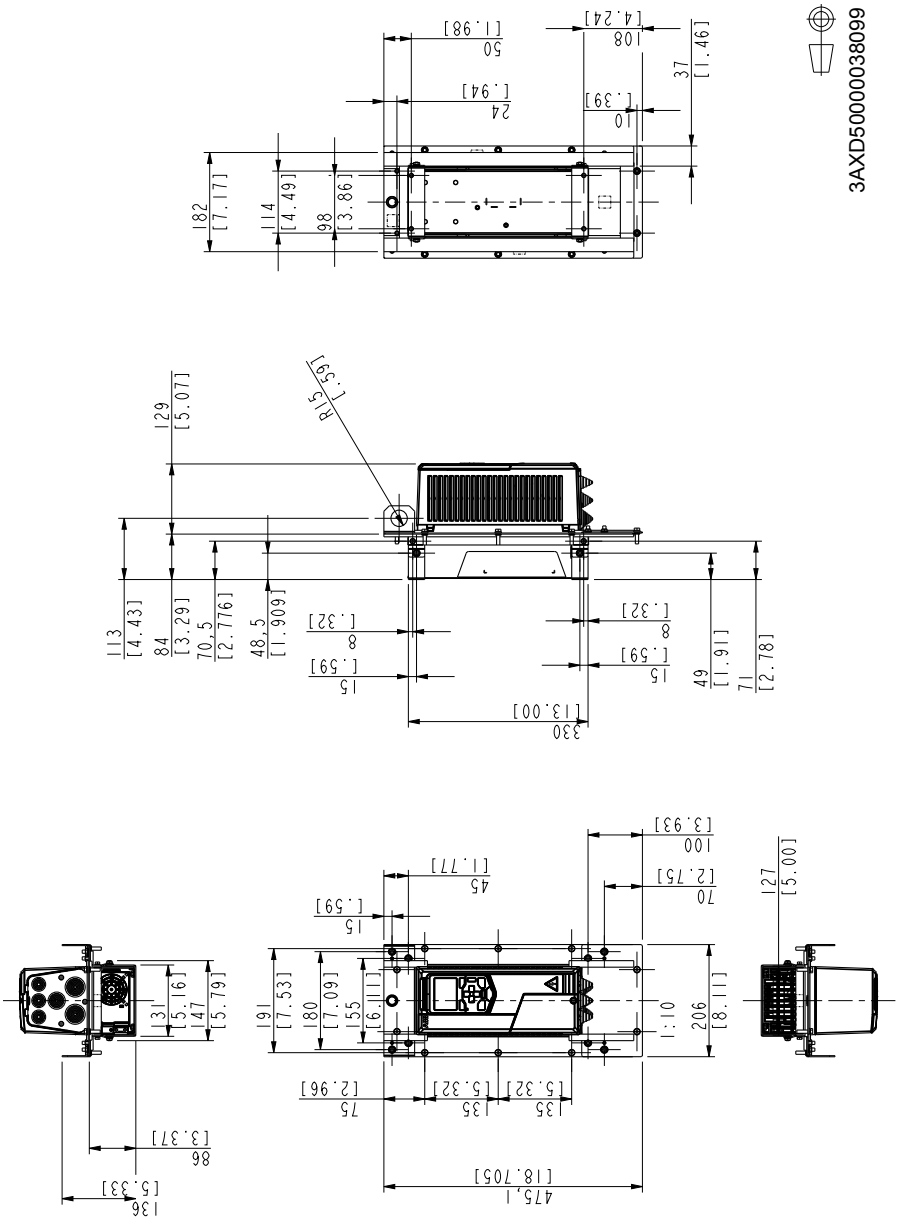

Hood is needed for UL Type 12 drives only

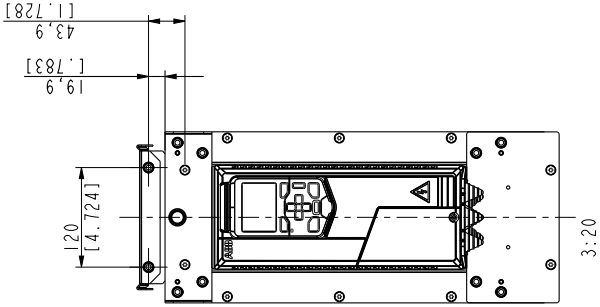

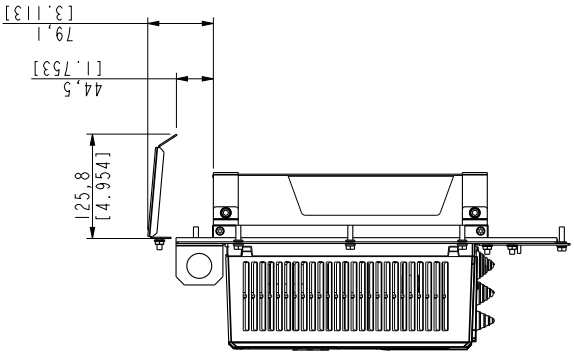

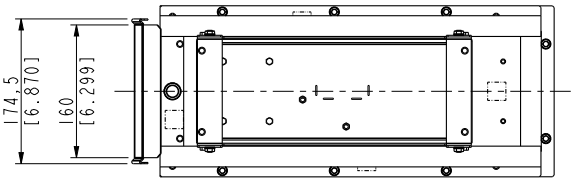

Frame R1

For ACS580-01, ACH580-01 and ACQ580-01 types -07A2-4, -09A4-4 and -12A6-4.

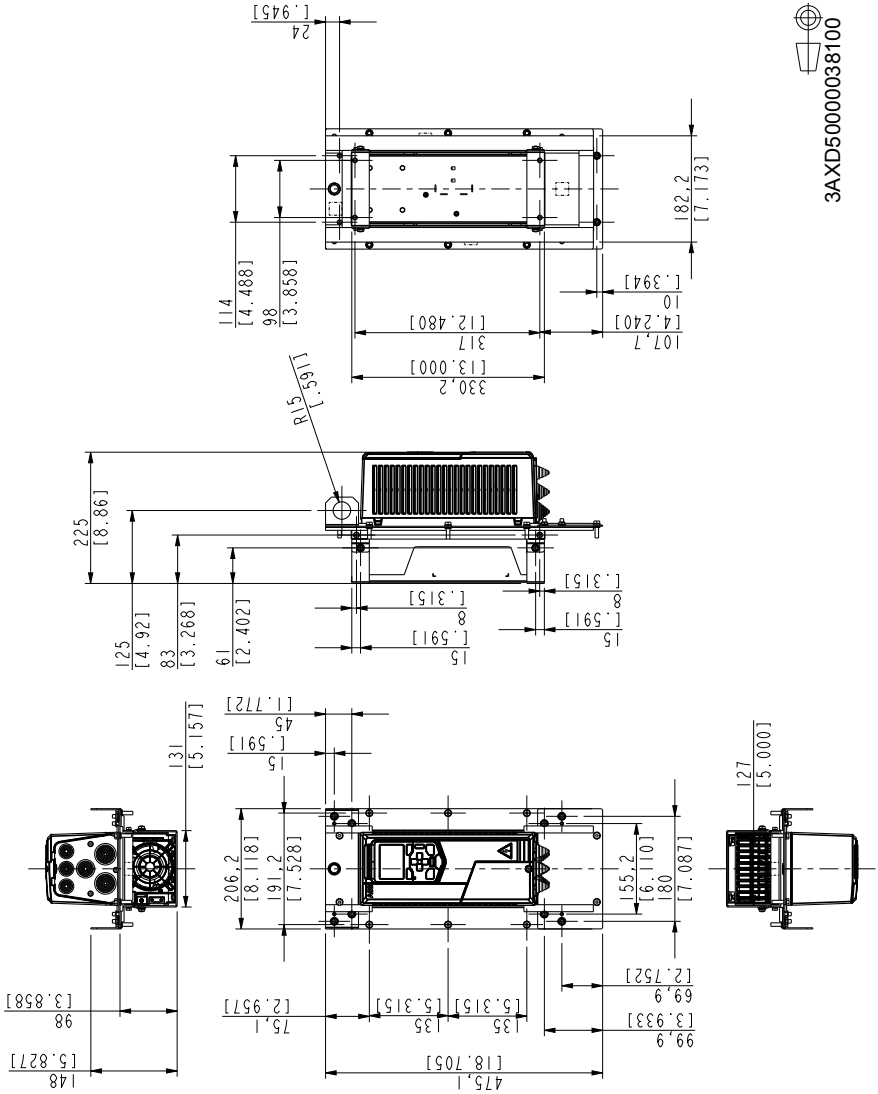

Hood is needed for UL Type 12 drives only

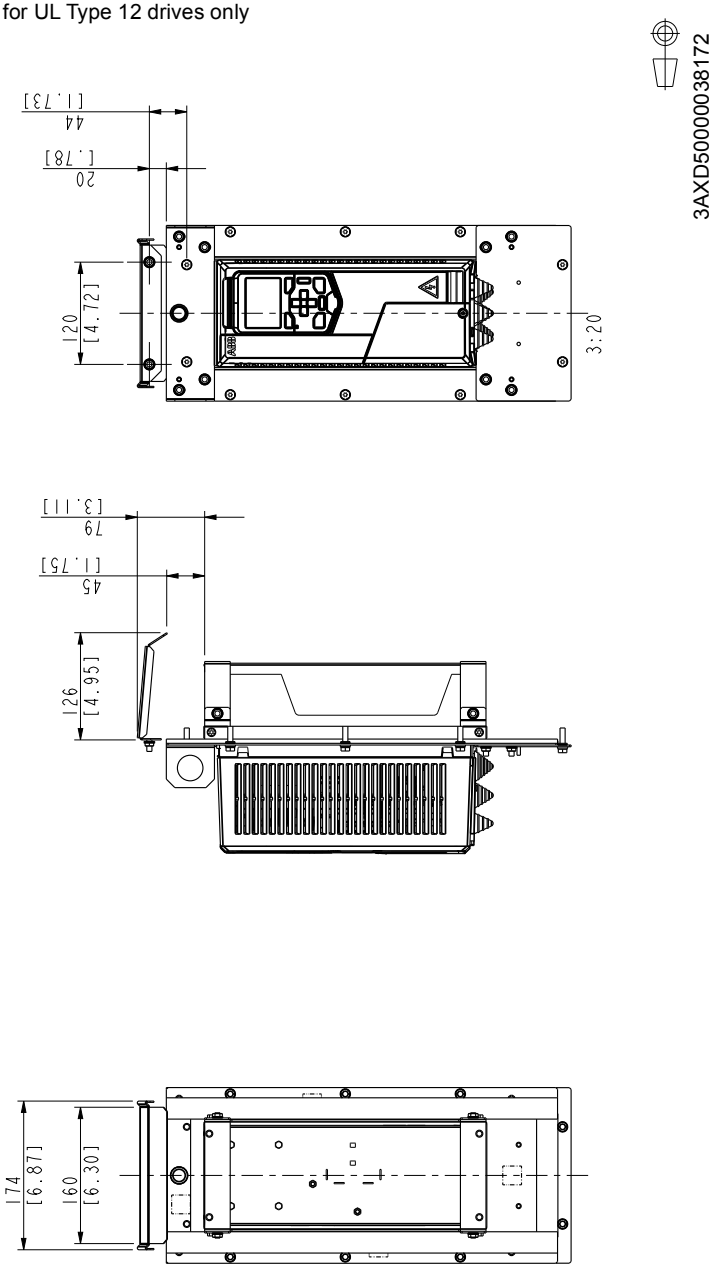

Attaching points and hole dimensions

For ACS580-01, ACH580-01 and ACQ580-01 types -02A6-4, -03A3-4,-04A0-4, -05A6-4, -07A2-4, -09A4-4 and -12A6-4

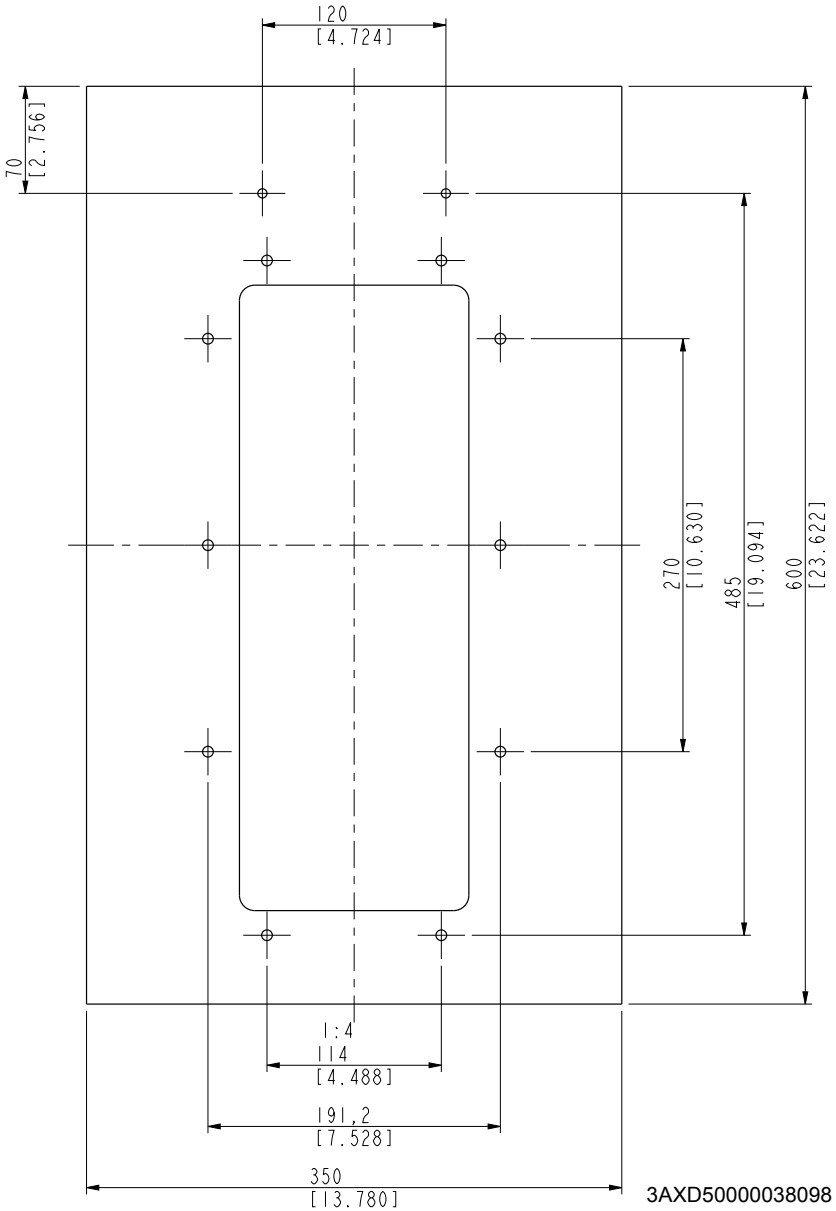

Frame R2

For ACS580-01, ACH580-01 and ACQ580-01 types -017A-4 and -025A-4.

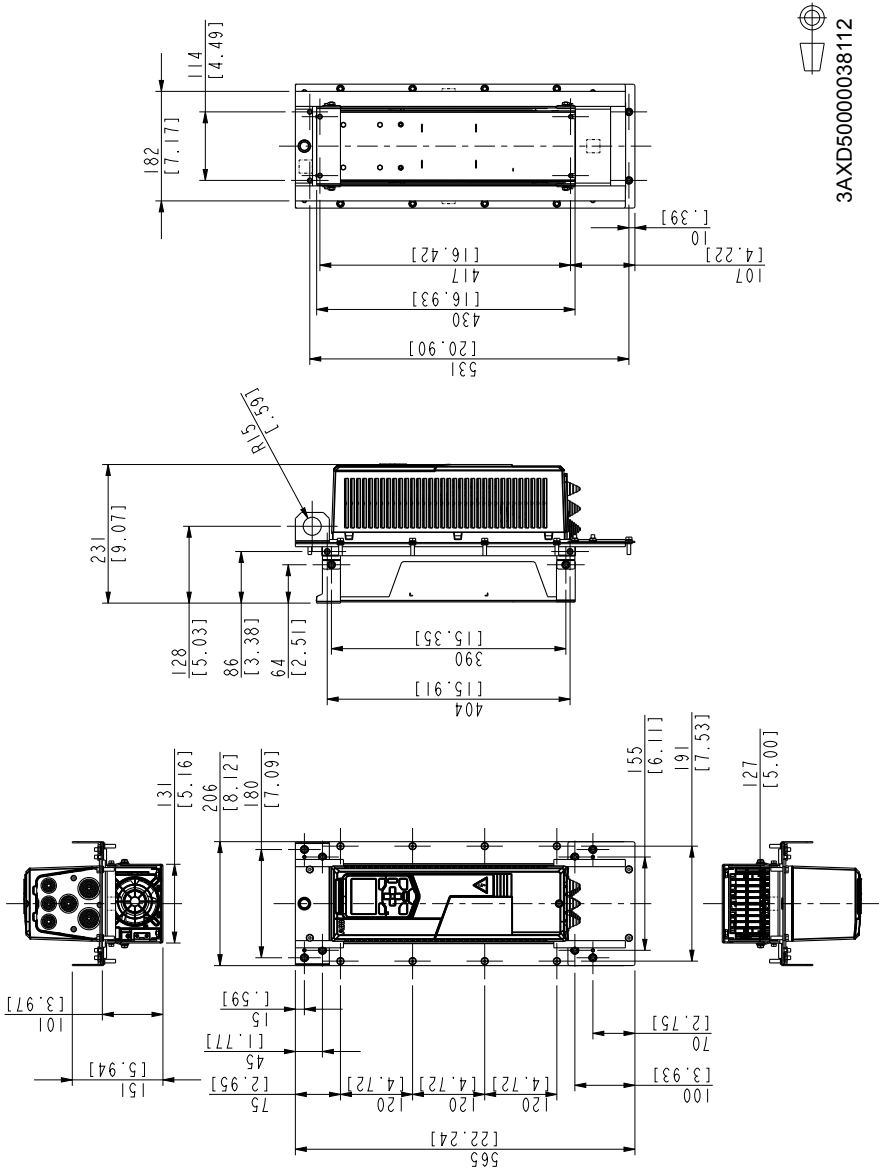

Hood is needed for UL Type 12 drives only

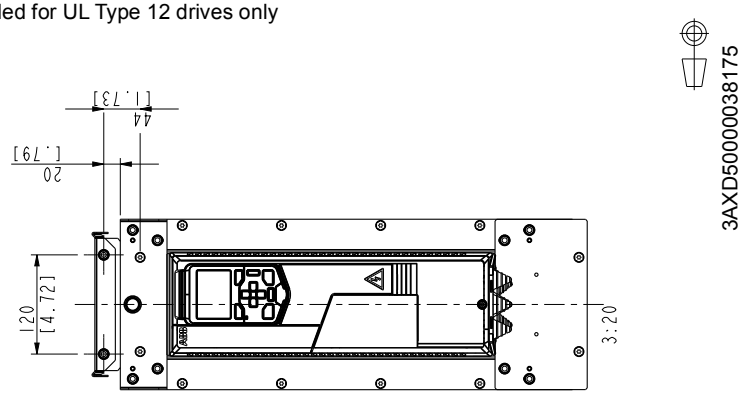

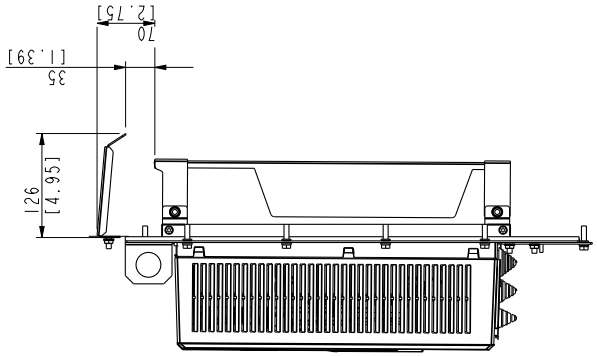

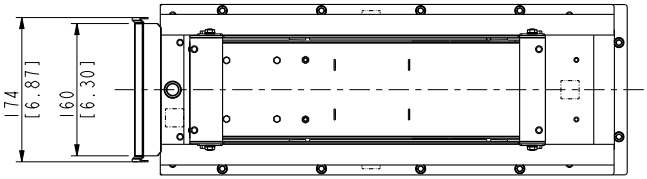

Attaching points and hole dimensions

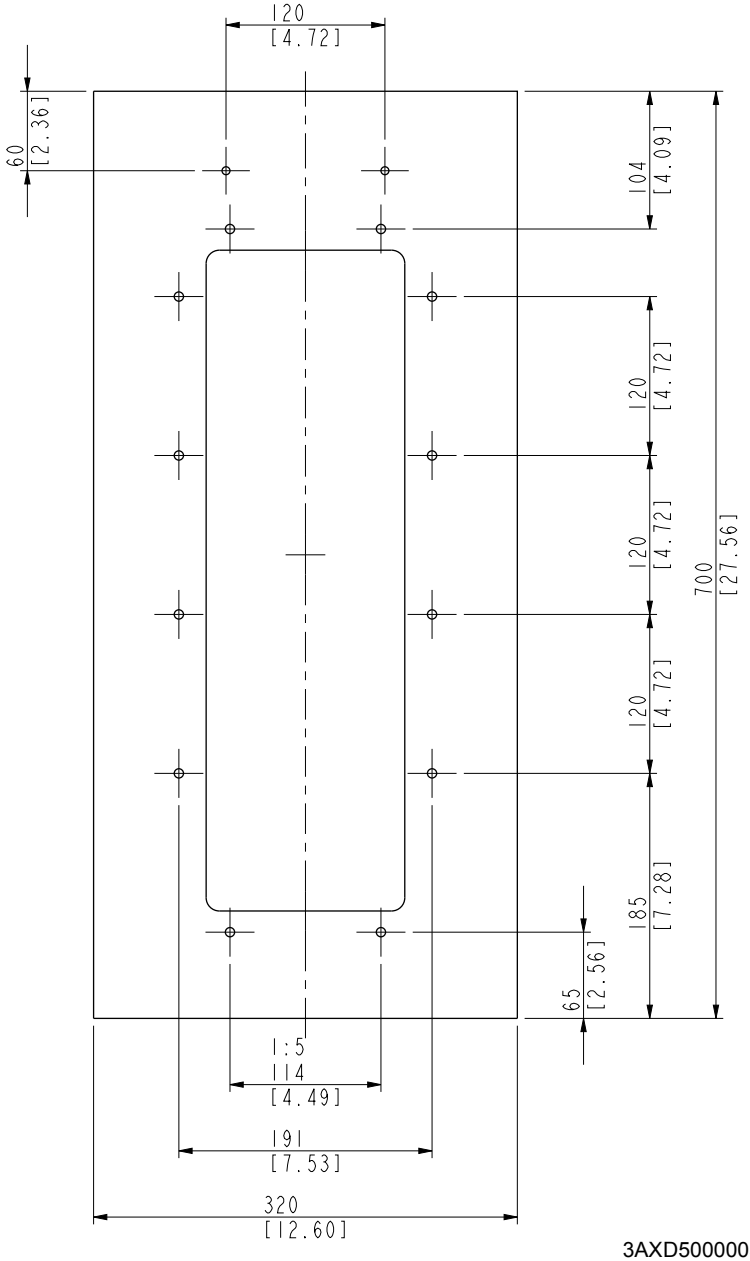

3AXD50000038111

Frame R3

For ACS580-01, ACH580-01 and ACQ580-01 types -032A-4, -038A-4 and -045A-4.

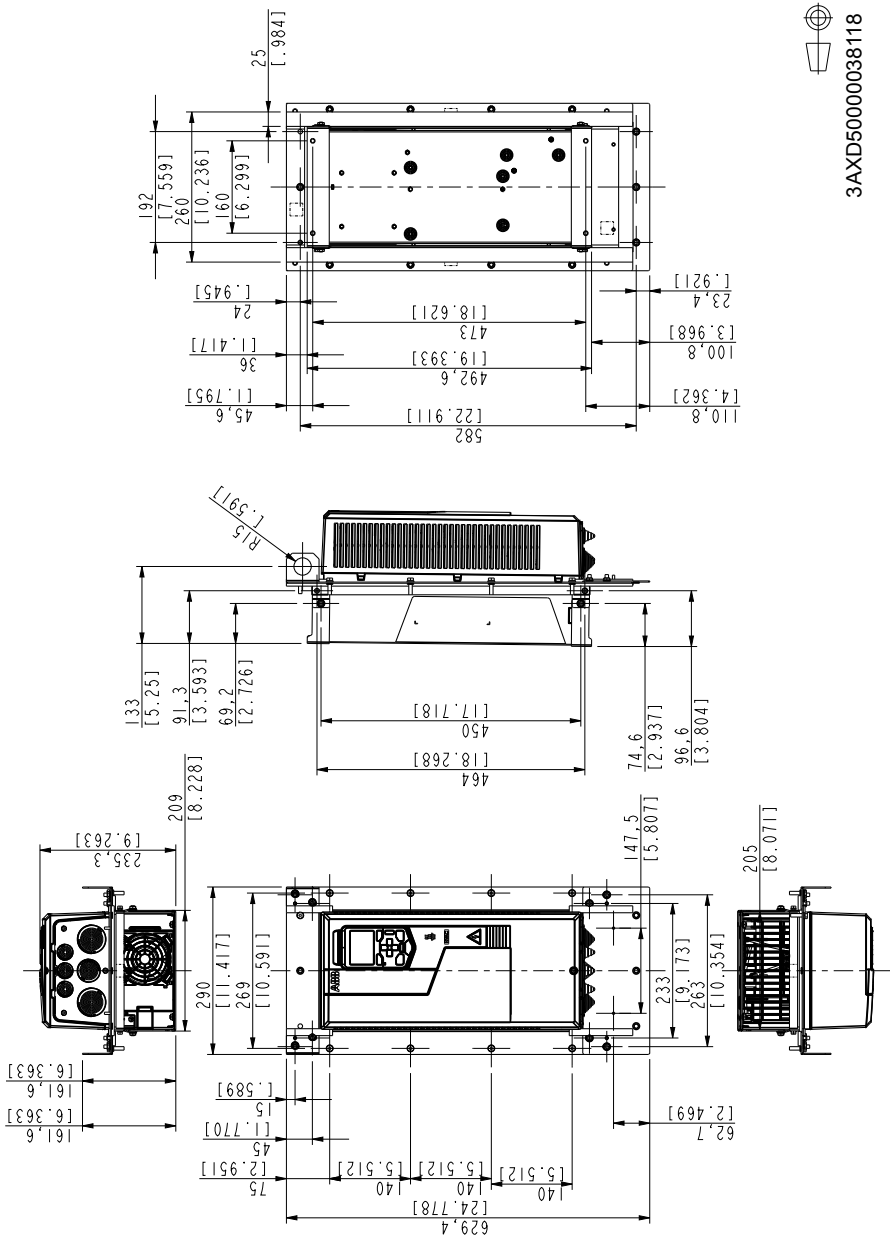

Hood is needed for UL Type 12 drives only

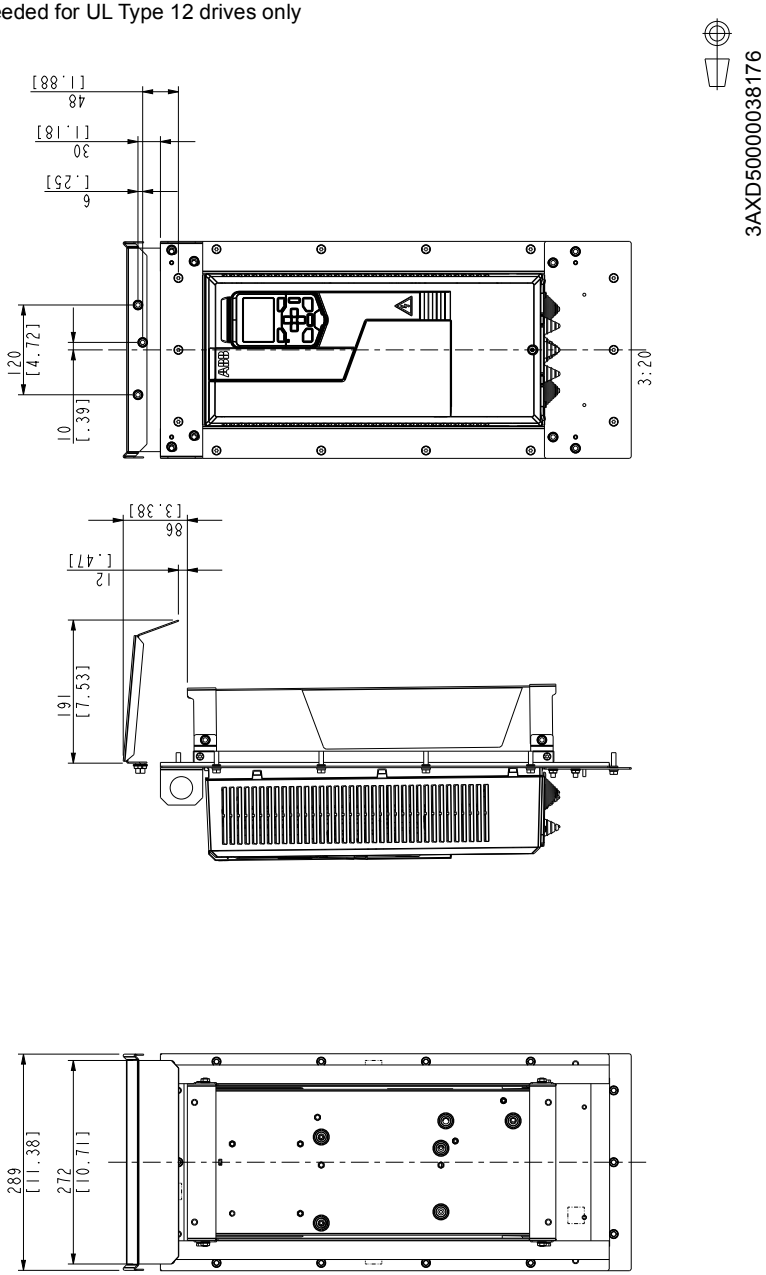

Attaching points and hole dimensions

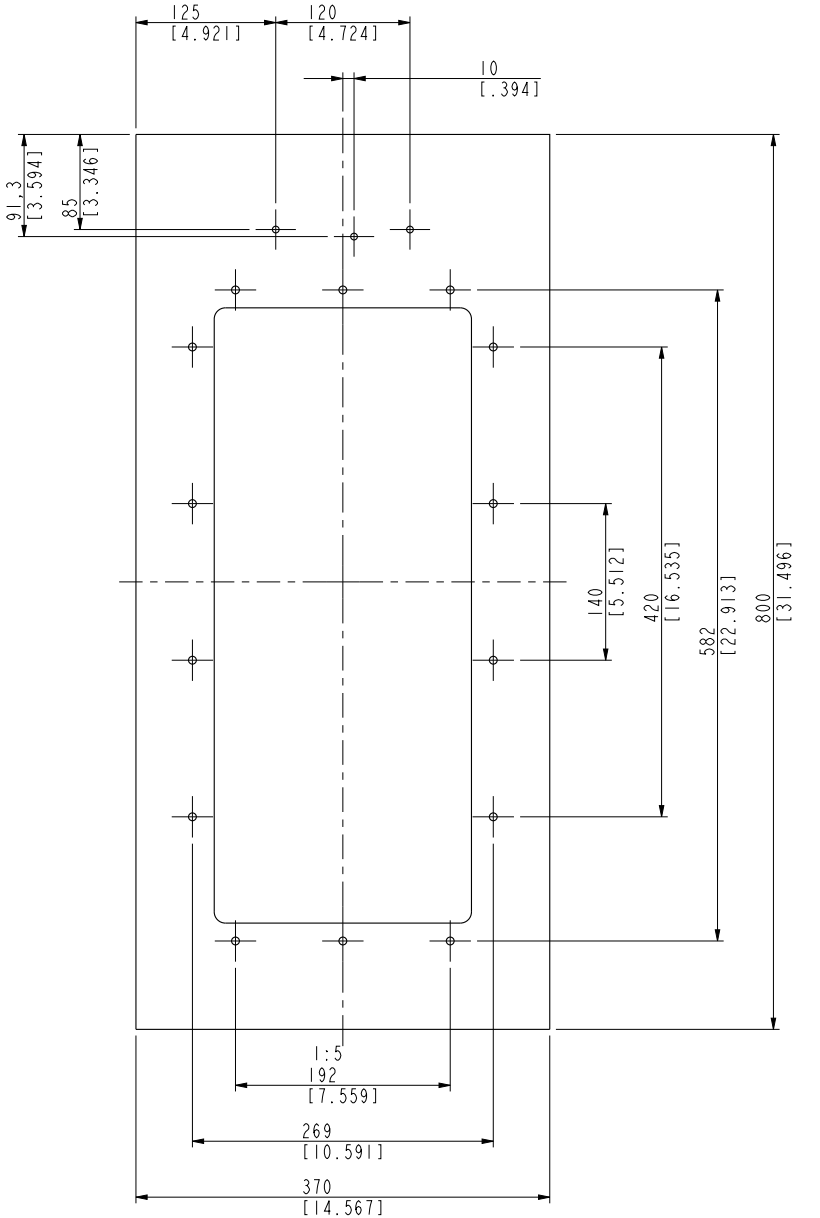

3AXD50000038117

Frame R1

For ACS580-01, ACH580-01 and ACQ580-01 types -02A7-4, -03A4-4, -04A1-4, -05A7-4, -07A3-4, -09A5-4 and -12A7-4.

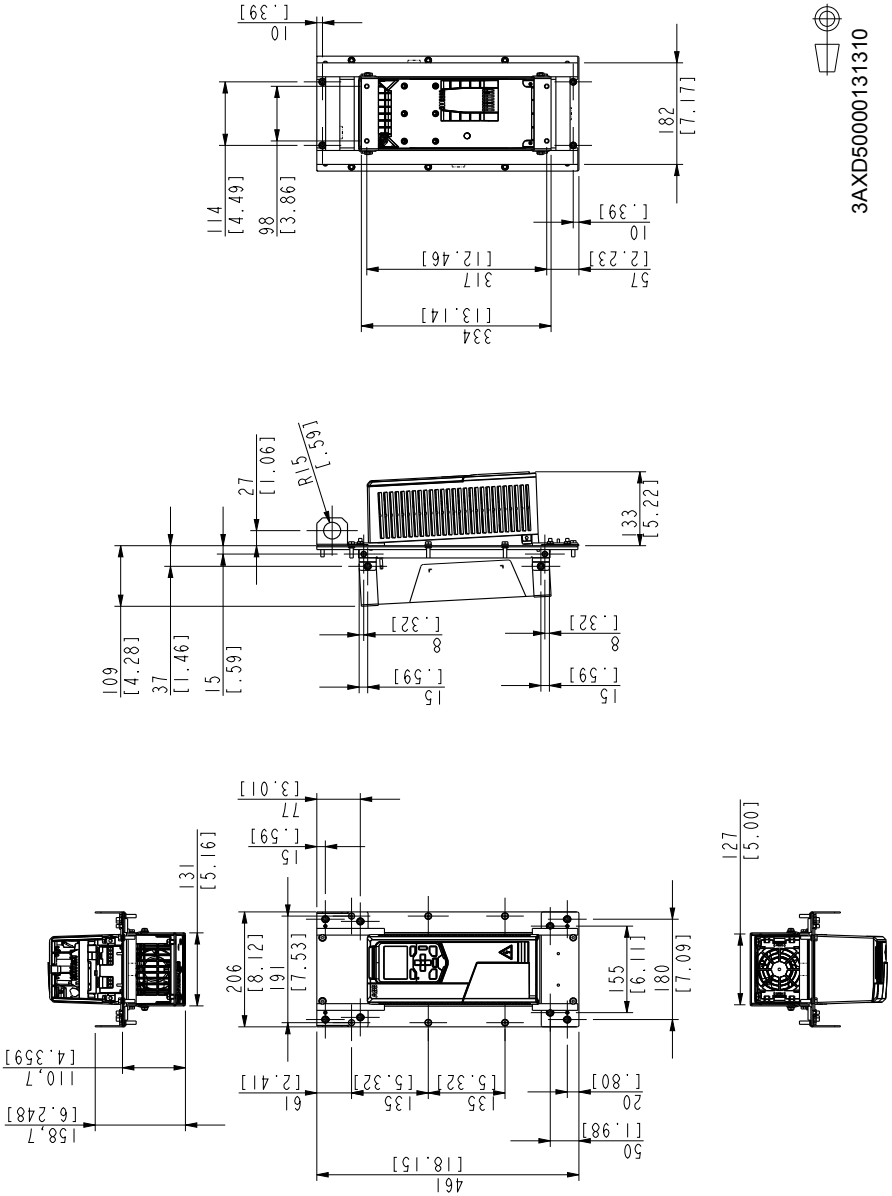

Hood is needed for UL Type 12 drives only

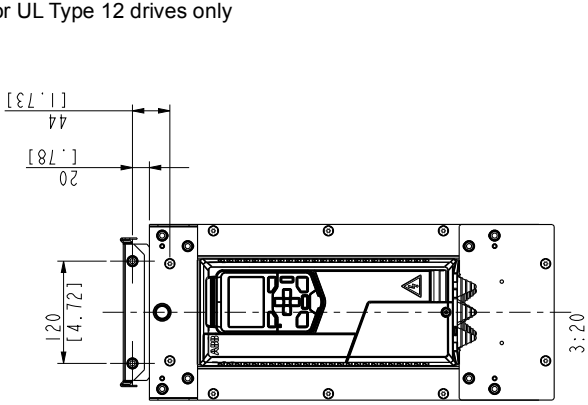

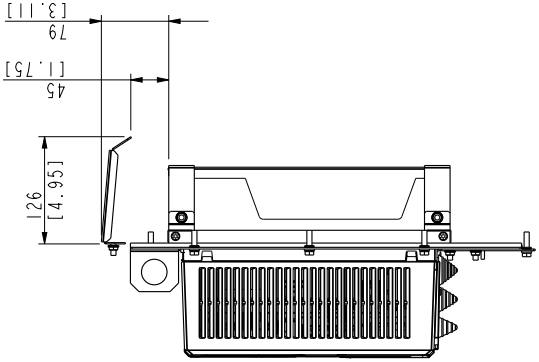

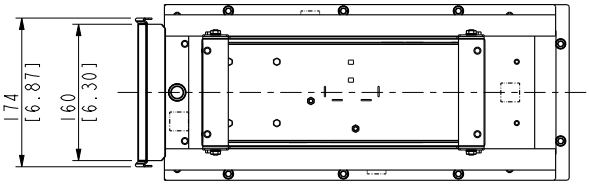

Attaching points and hole dimensions

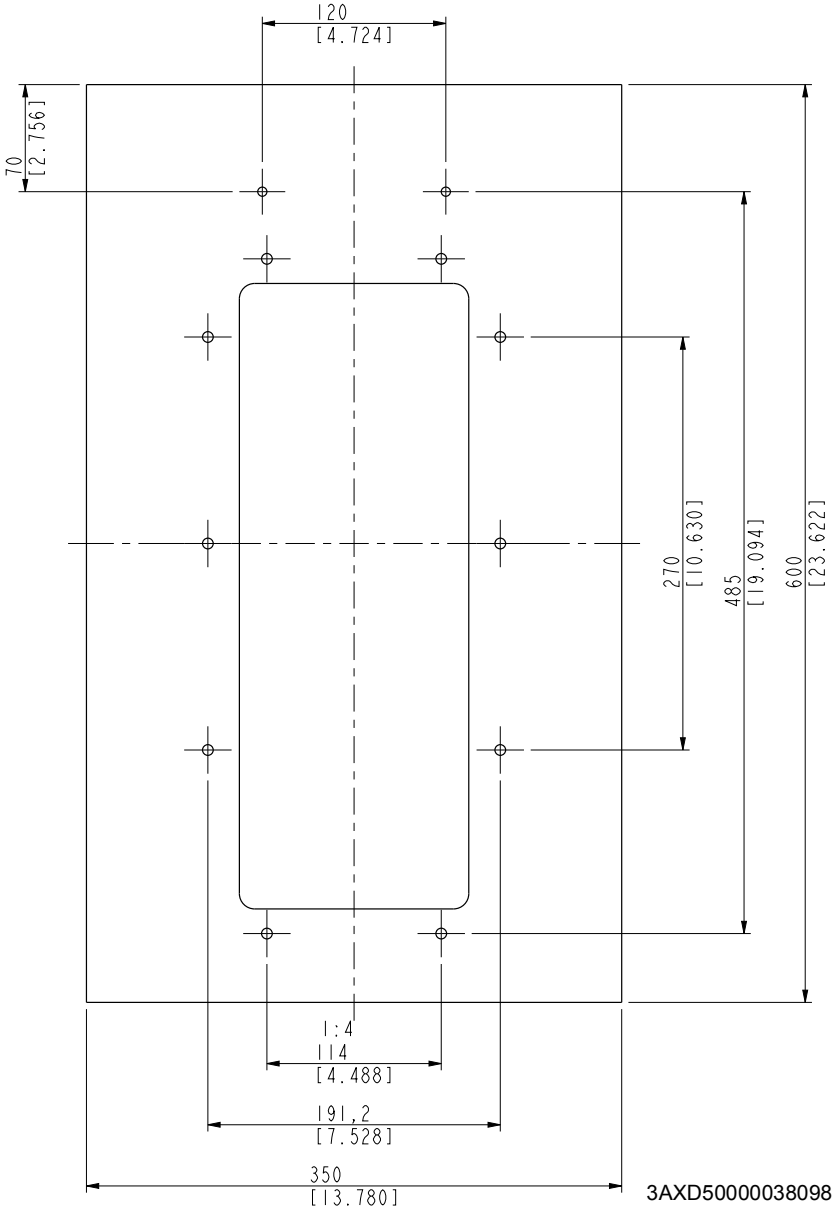

Frame R2

For ACS580-01, ACH580-01 and ACQ580-01 types -018A-4 and -026A-4.

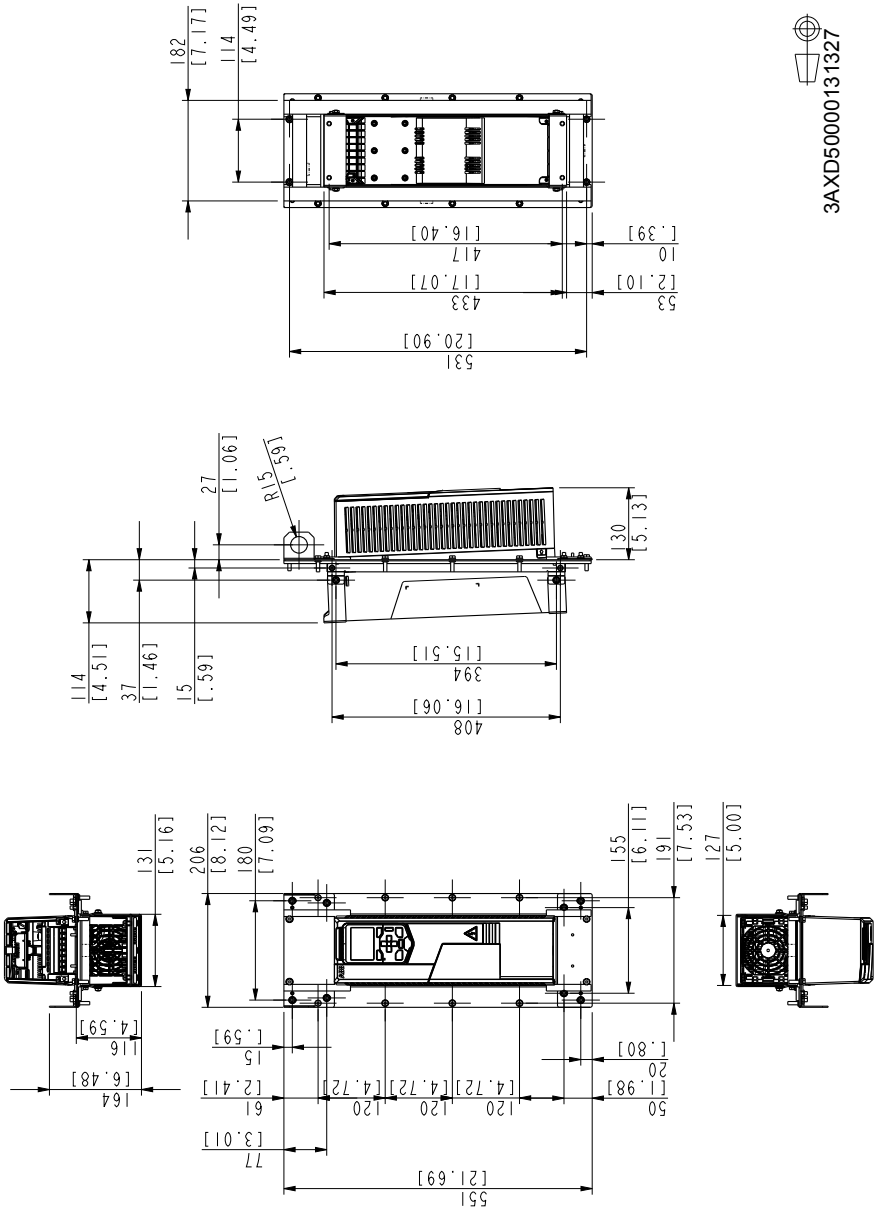

Hood is needed for UL Type 12 drives only

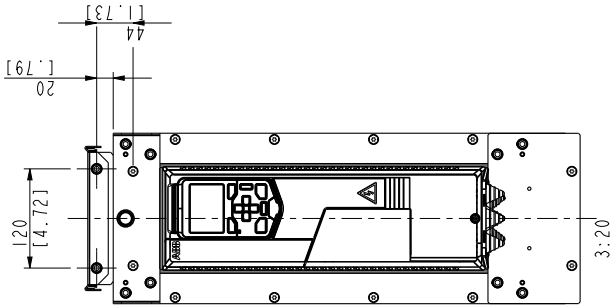

3AXD50000038175

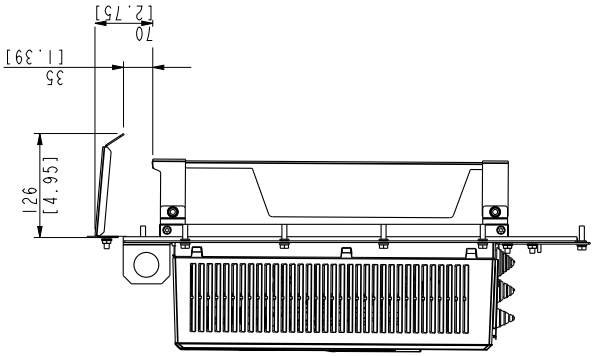

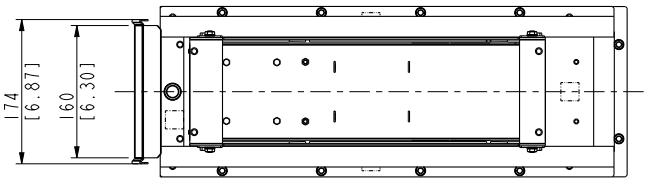

Attaching points and hole dimensions

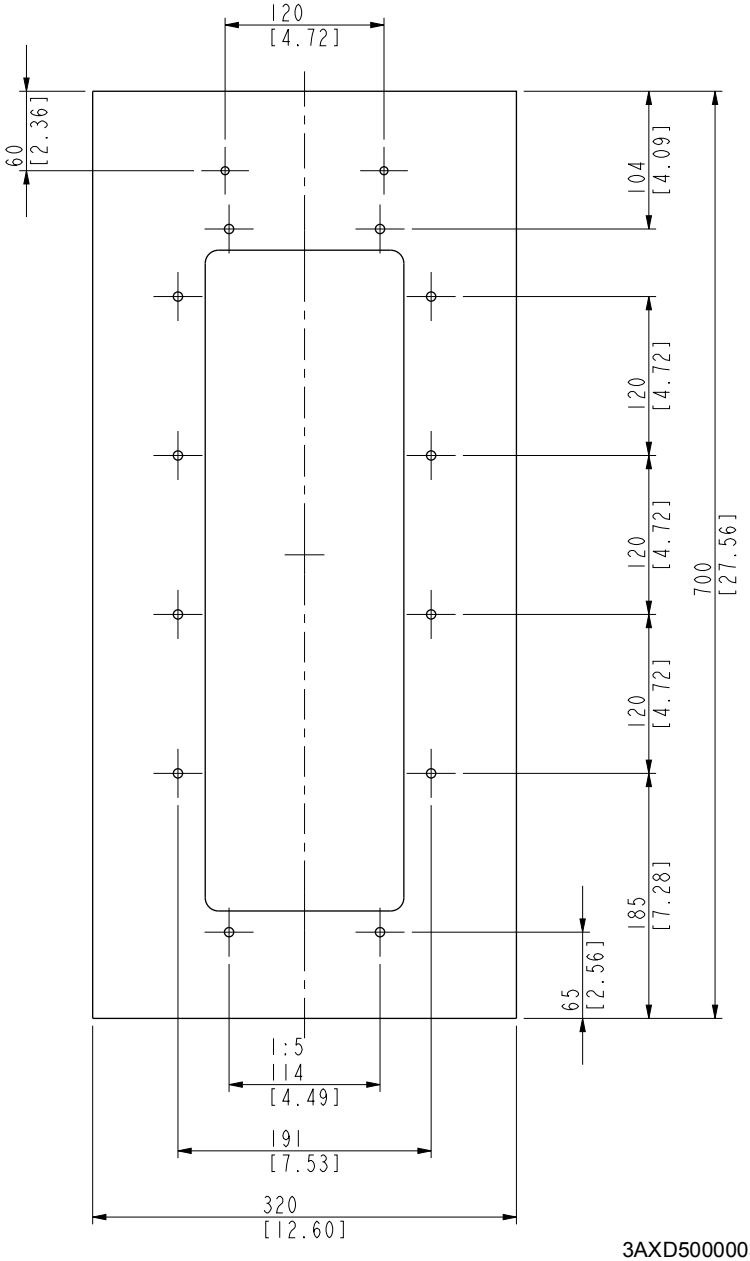

3AXD50000038111

Frame R3

For ACS580-01, ACH580-01 and ACQ580-01 types -033A-4, -039A-4 and -046A-4.

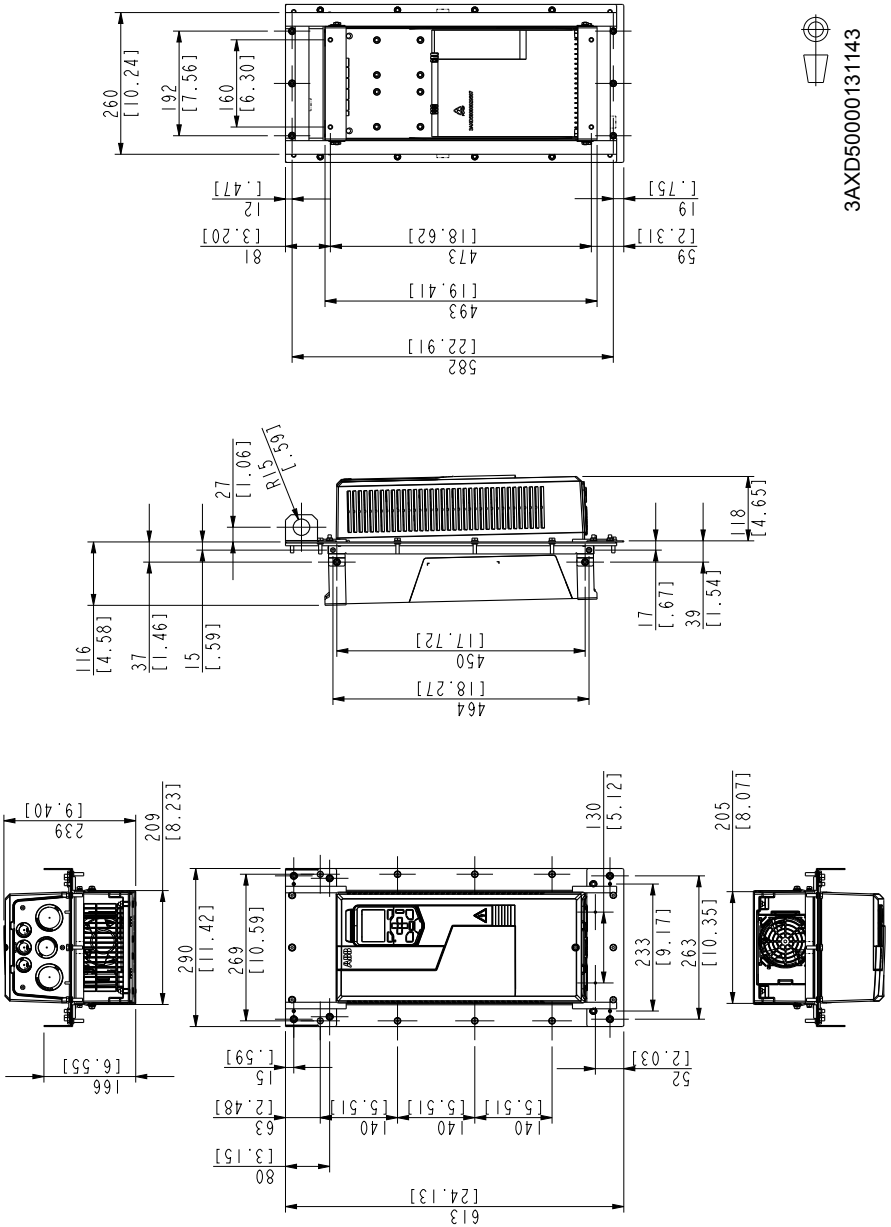

Hood is needed for UL Type 12 drives only

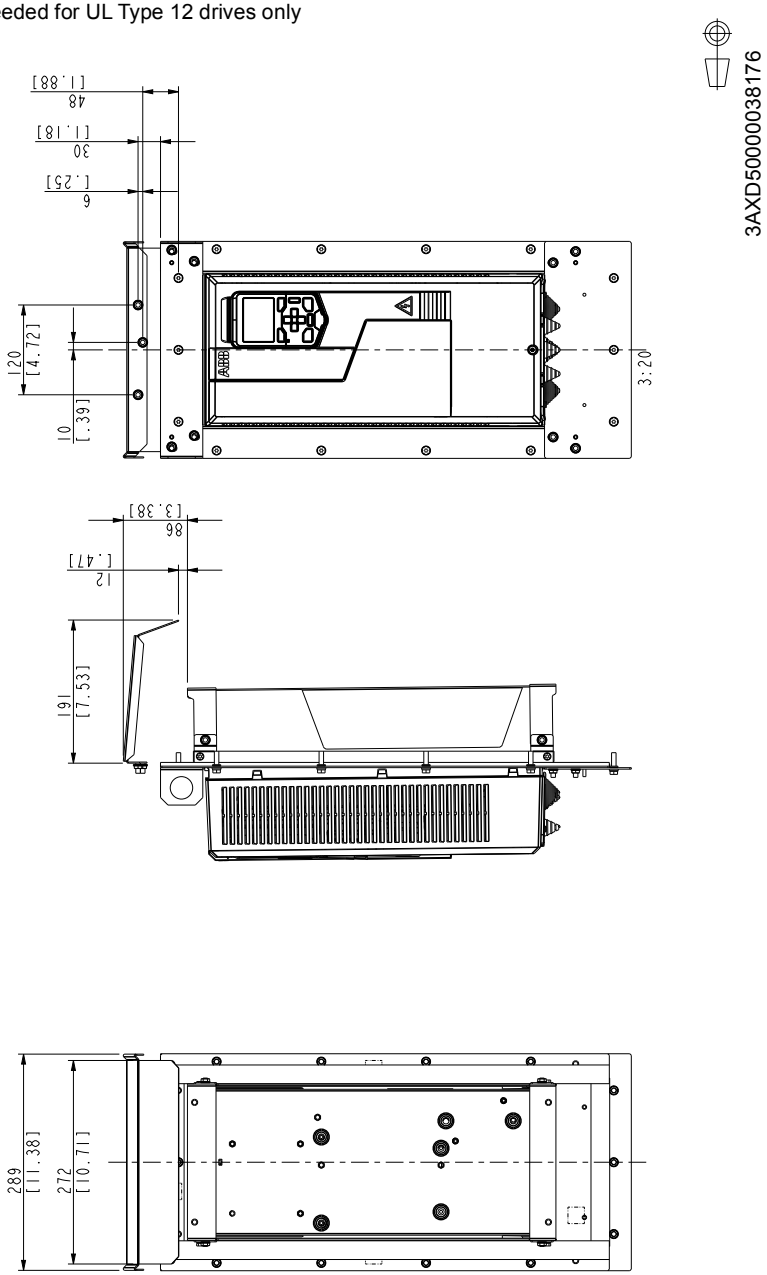

Attaching points and hole dimensions

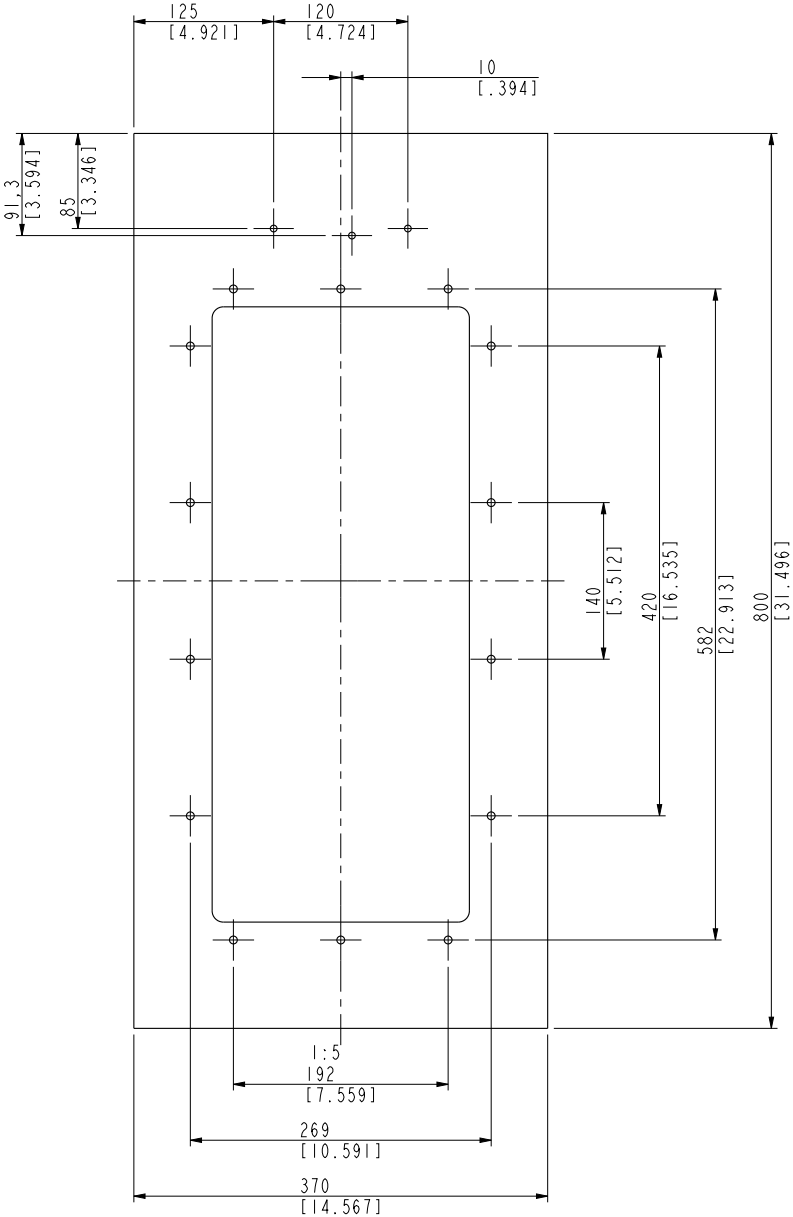

3AXD50000038117

Frame R4

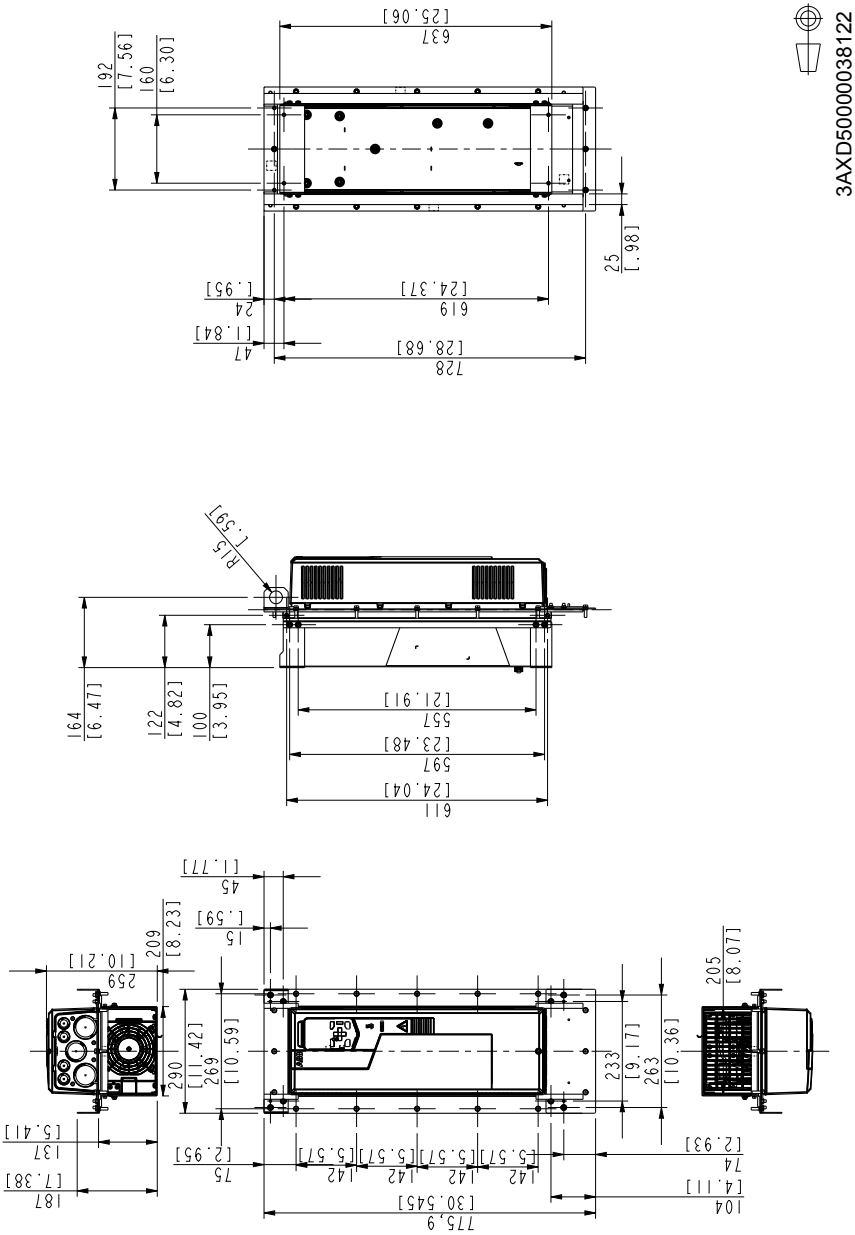
3AXD50000038122
637
[25.06]
192
[7.56]
160
[6.30]
25
[.98]
619
[24.37]
24
[.95]
47
[1.84]
728
[28.68]
R15
[.59]
164
[6.47]
122
[4.82]
100
[3.95]
557
[21.91]
597
[23.48]
611
[24.04]
45
[1.77]
15
[.59]
209
[8.23]
259
[10.21]
290
269
[10.59]
[11.42]
233
[9.17]
263
[10.36]
205
[8.07]
137
[5.41]
187
[7.38]
75
[2.95]
142
[5.57]
74
[2.93]
104
[4.11]
775.9
[30.545]

Hood is needed for UL Type 12 drives only

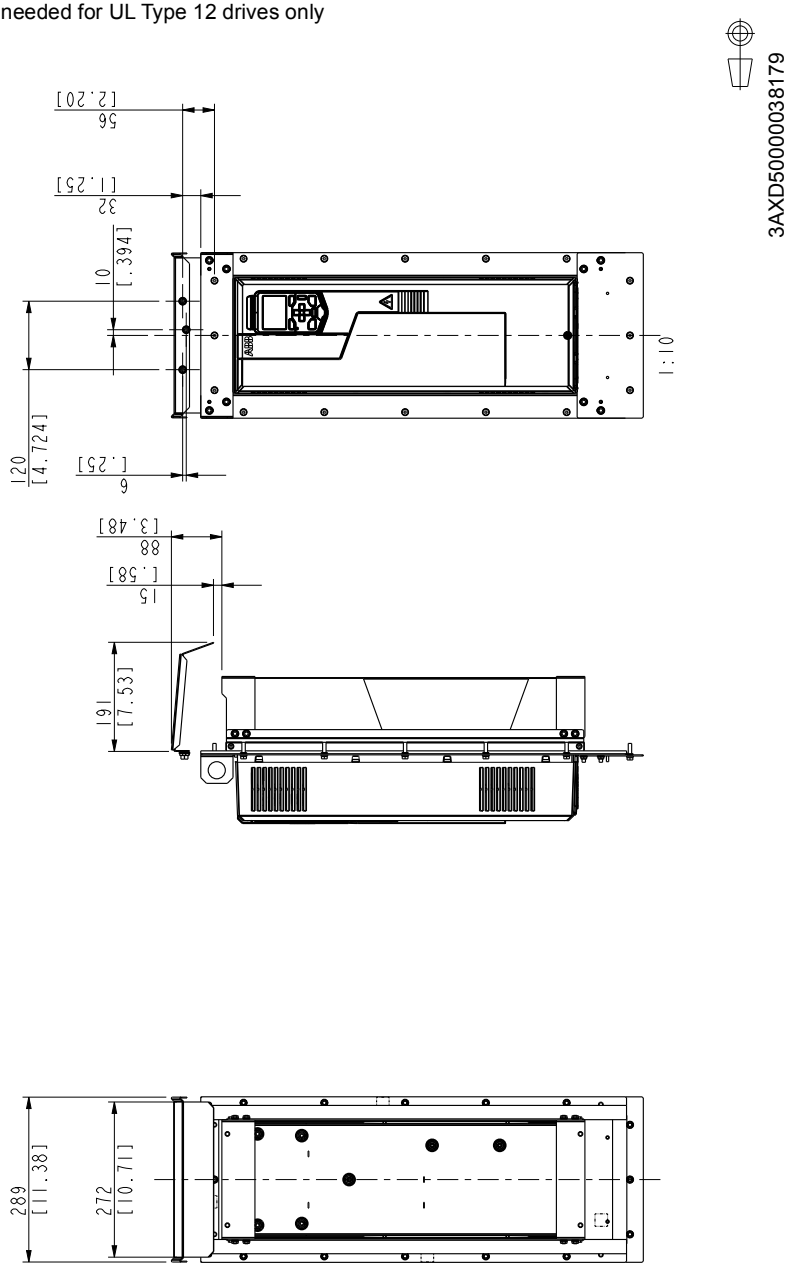

Frame R5

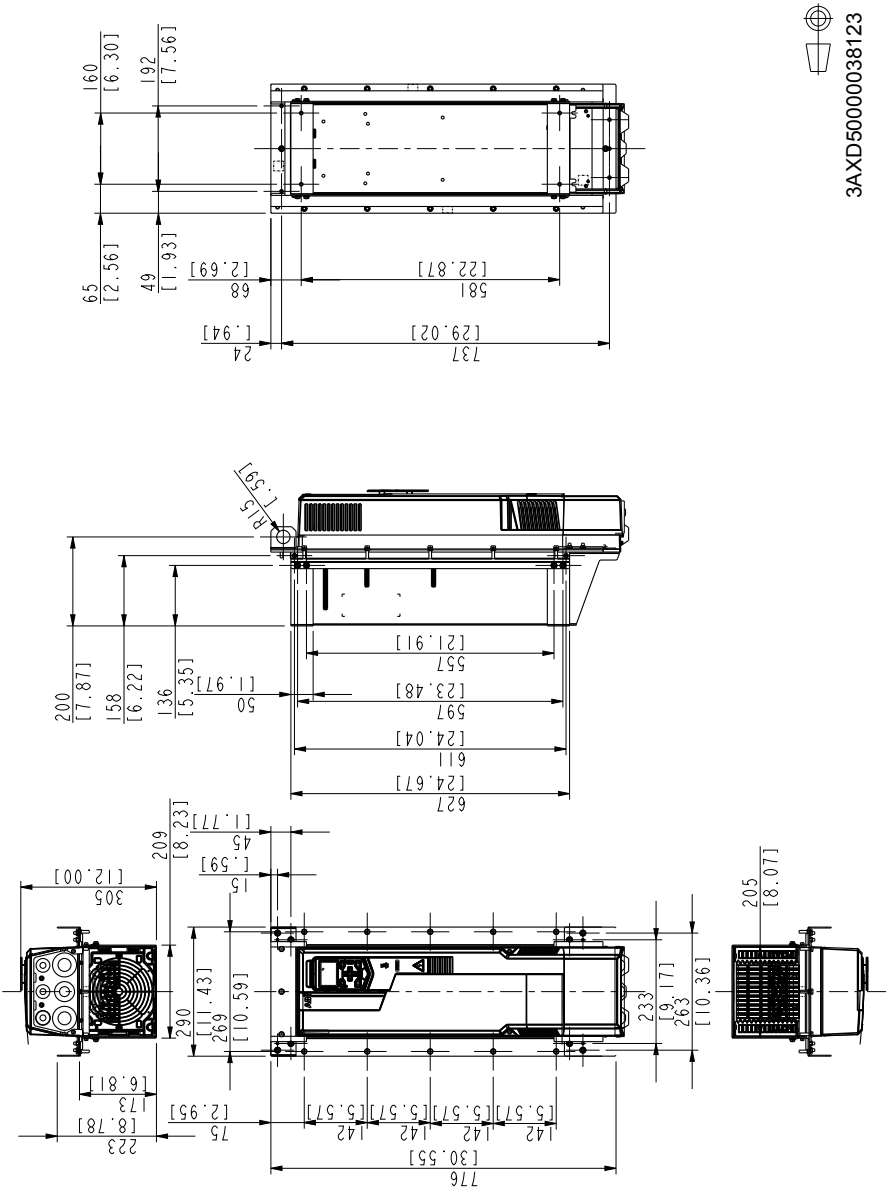
3AXD50000038123
160
[6.30]
192
[7.56]
65
[2.56]
49
[1.93]
68
[2.69]
581
[22.87]
24
[.94]
737
[29.02]
R15
[.59]
200
[7.87]
158
[6.22]
136
[5.35]
50
[1.97]
557
[21.91]
597
[23.48]
611
[24.04]
627
[24.67]
209
[8.23]
45
[1.77]
15
[.59]
305
[12.00]
290
[11.43]
269
[10.59]
233
[9.17]
263
[10.36]
205
[8.07]
223
[8.78]
173
[6.81]
75
[2.95]
142
[5.57]
142
[5.57]
142
[5.57]
142
[5.57]
776
[30.55]

Hood is needed for UL Type 12 drives only

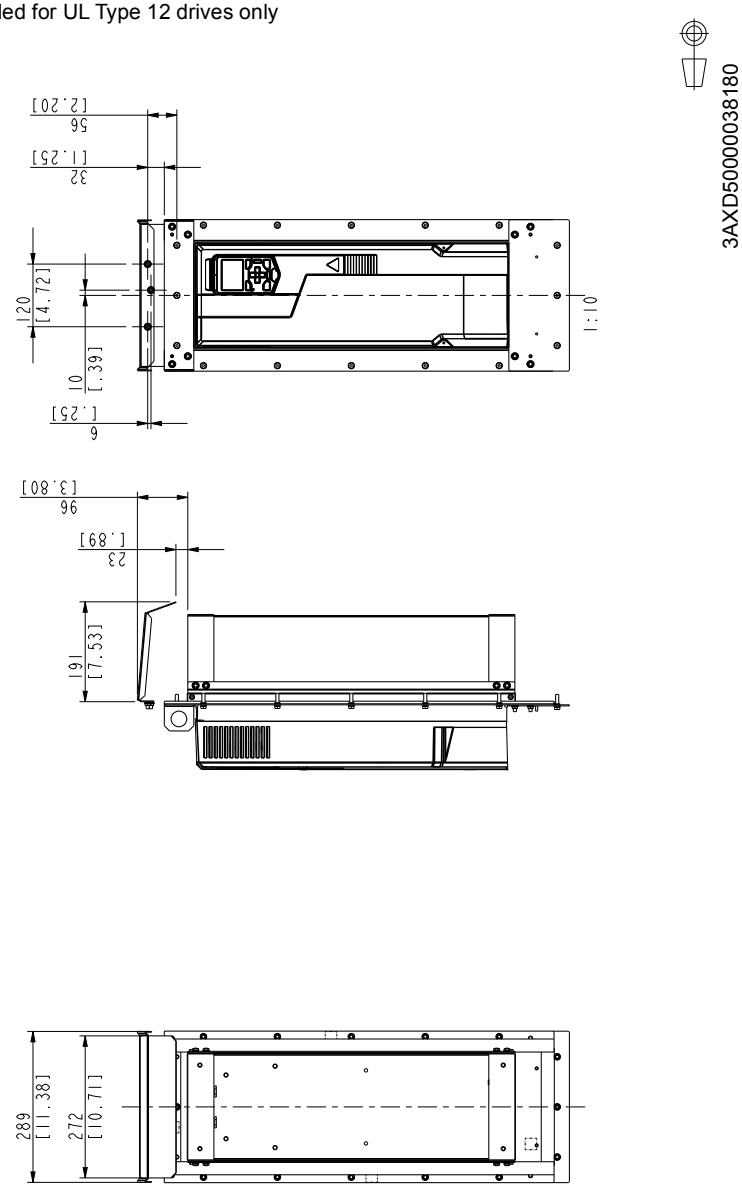

Frames R4…R5

Attaching points and hole dimensions

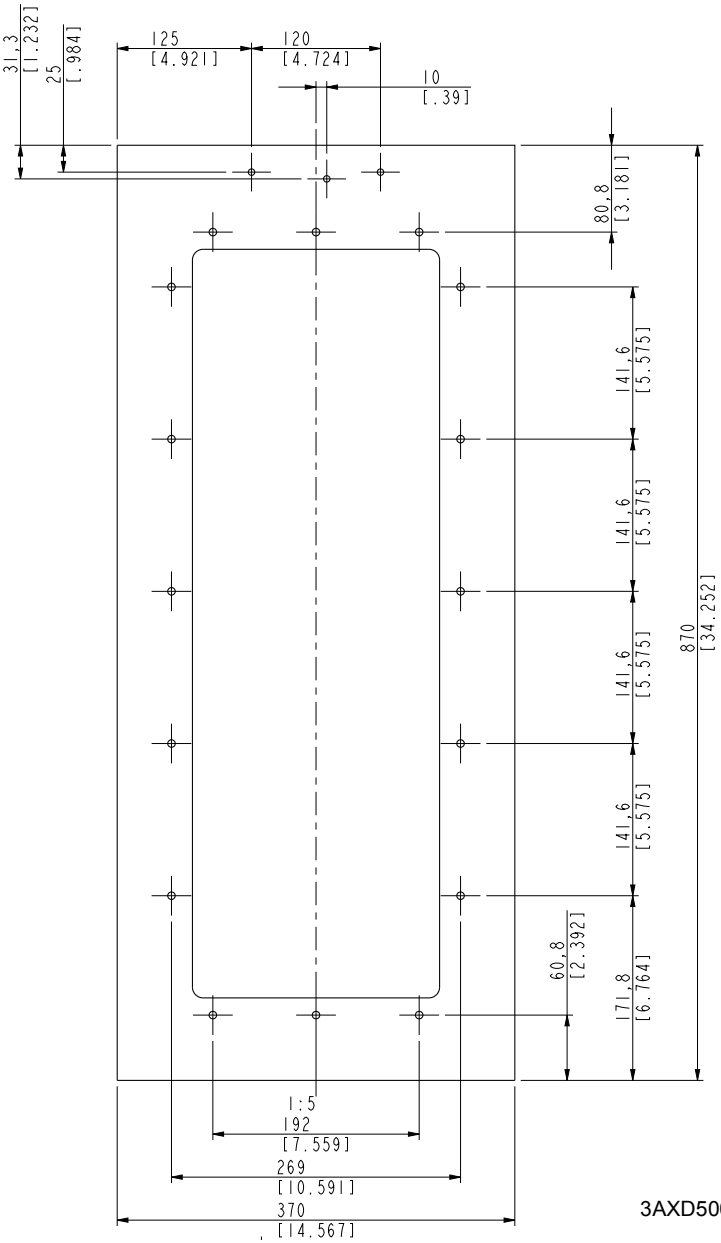

Frame R6

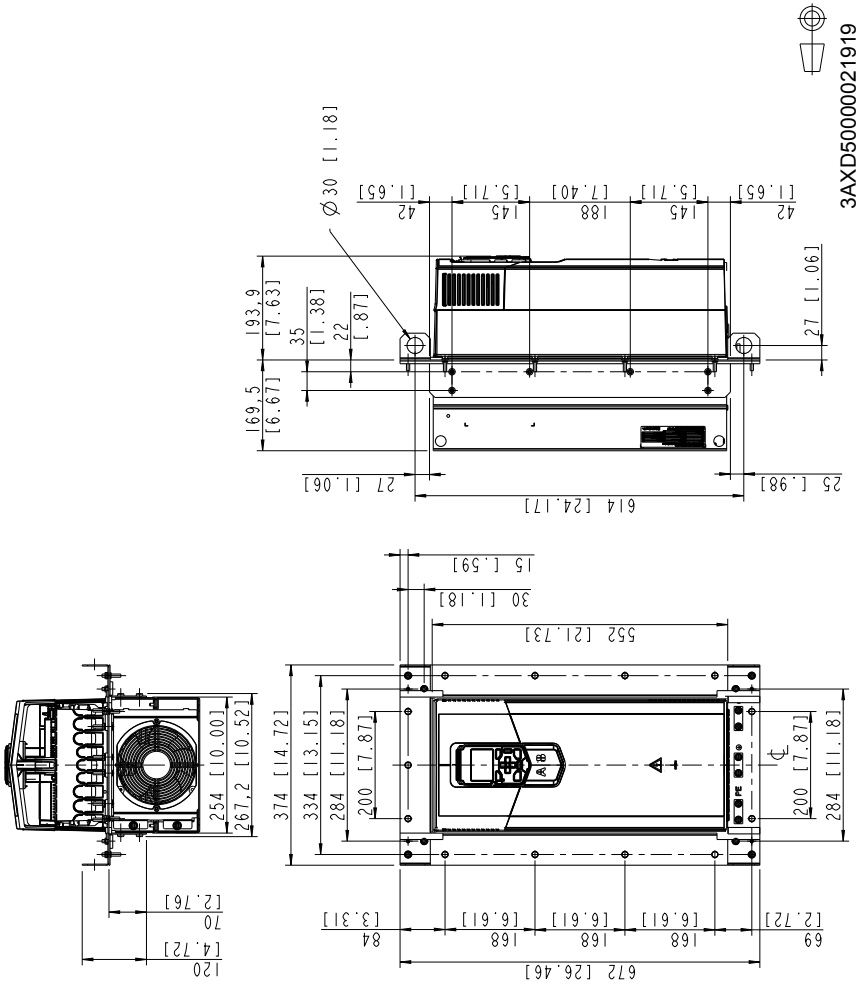
3AXD50000021919
Ø 30 [1.18]
42 [1.65]
145 [5.71]
188 [7.40]
145 [5.71]
42 [1.65]
193,9 [7.63]
35 [1.38]
22 [.87]
169,5 [6.67]
27 [1.06]
27 [1.06]
614 [24.17]
25 [.98]
15 [.59]
30 [1.18]
552 [21.73]
374 [14.72]
334 [13.15]
284 [11.18]
200 [7.87]
254 [10.00]
267,2 [10.52]
200 [7.87]
284 [11.18]
120 [4.72]
70 [2.76]
84 [3.31]
168 [6.61]
168 [6.61]
168 [6.61]
69 [2.72]
672 [26.46]

Hood is needed for UL Type 12 drives only

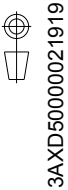

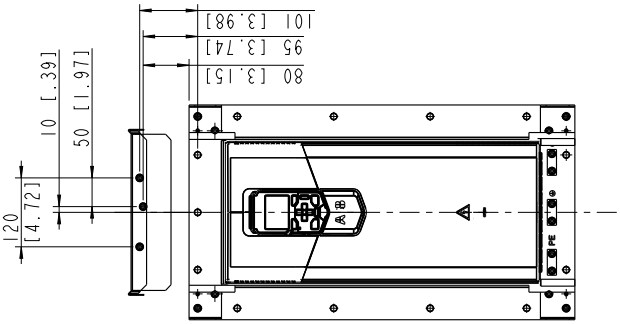

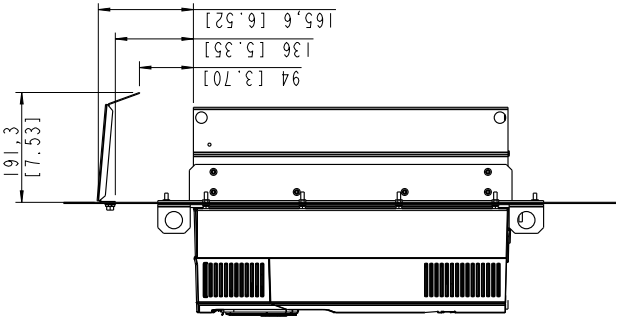

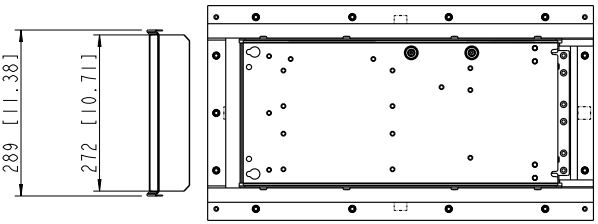

Attaching points and hole dimensions

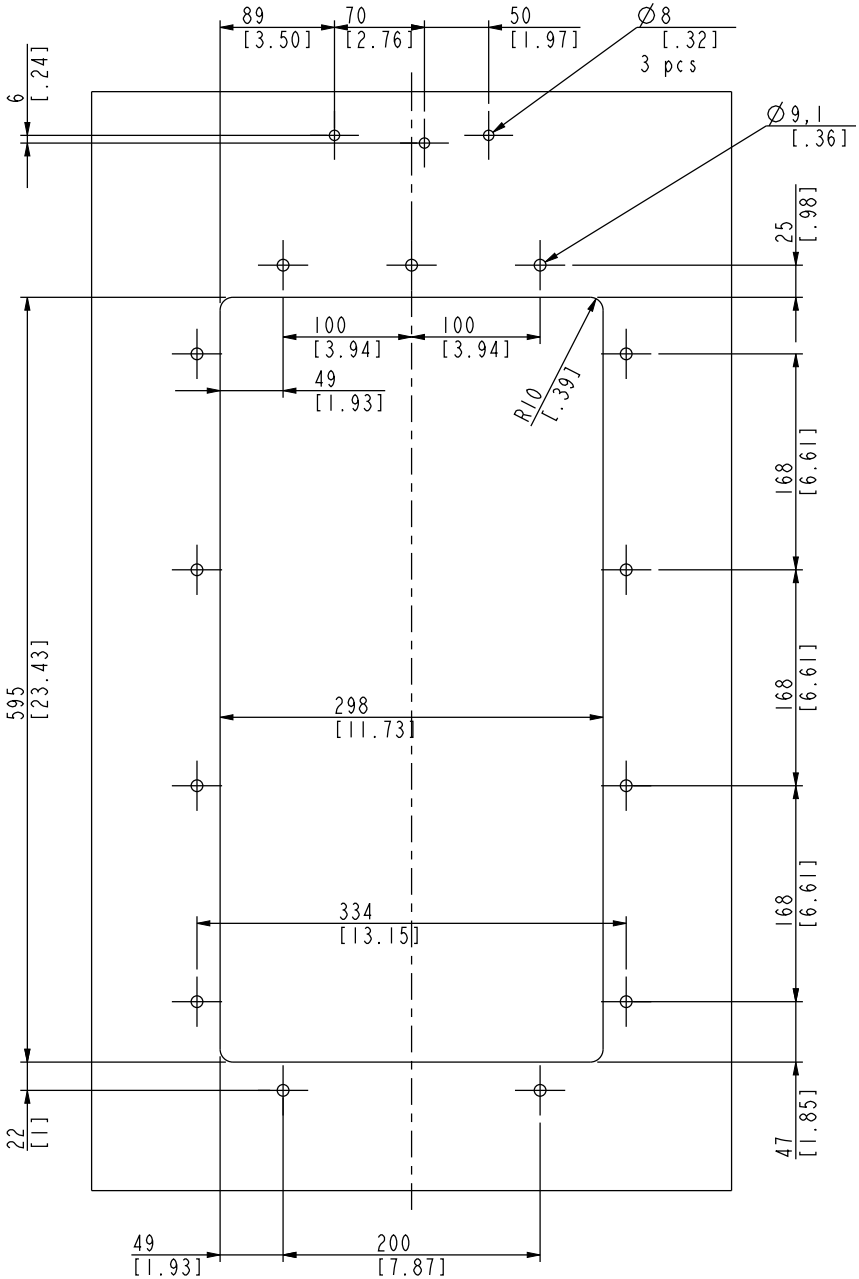

3AXD50000019323

Frame R7

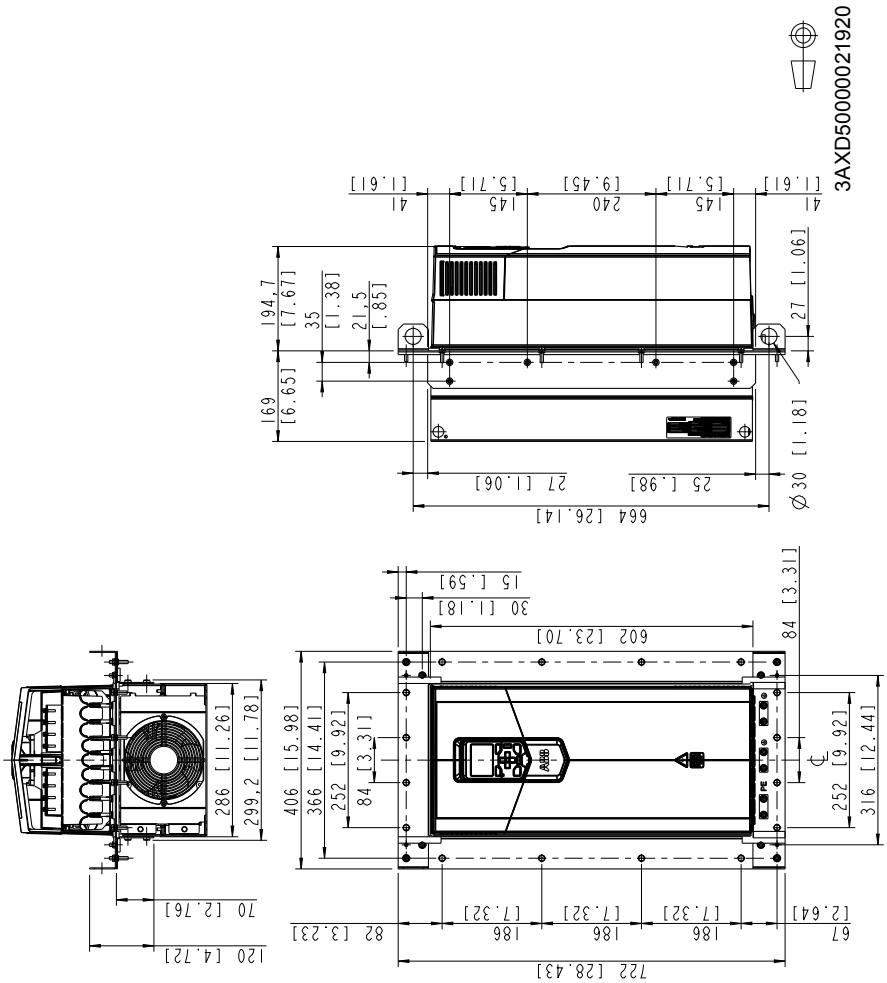
3AXD50000021920
41 [1.61]
145 [5.71]
240 [9.45]
145 [5.71]
41 [1.61]
27 [1.06]
Ø30 [1.18]
25 [.98]
27 [1.06]
664 [26.14]
194,7 [7.67]
35 [1.38]
21,5 [.85]
169 [6.65]
15 [.59]
30 [1.18]
602 [23.70]
84 [3.31]
406 [15.98]
366 [14.41]
252 [9.92]
84 [3.31]
252 [9.92]
316 [12.44]
67 [2.64]
186 [7.32]
186 [7.32]
186 [7.32]
82 [3.23]
722 [28.43]
286 [11.26]
299,2 [11.78]
70 [2.76]
120 [4.72]

Hood is needed for UL Type 12 drives only

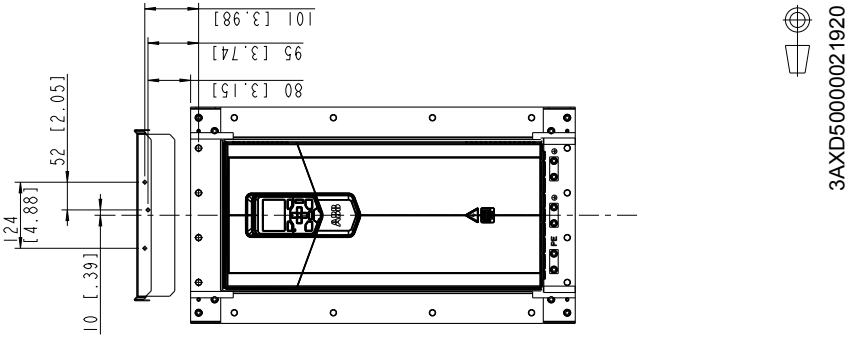

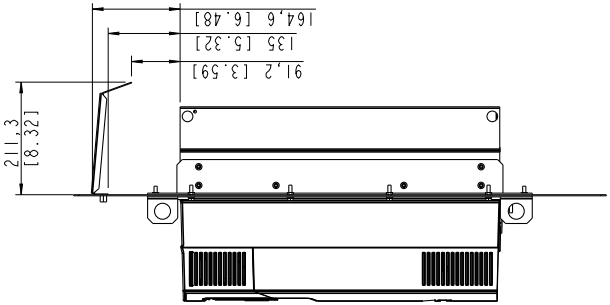

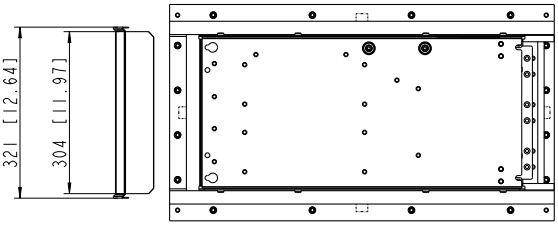

Attaching points and hole dimensions

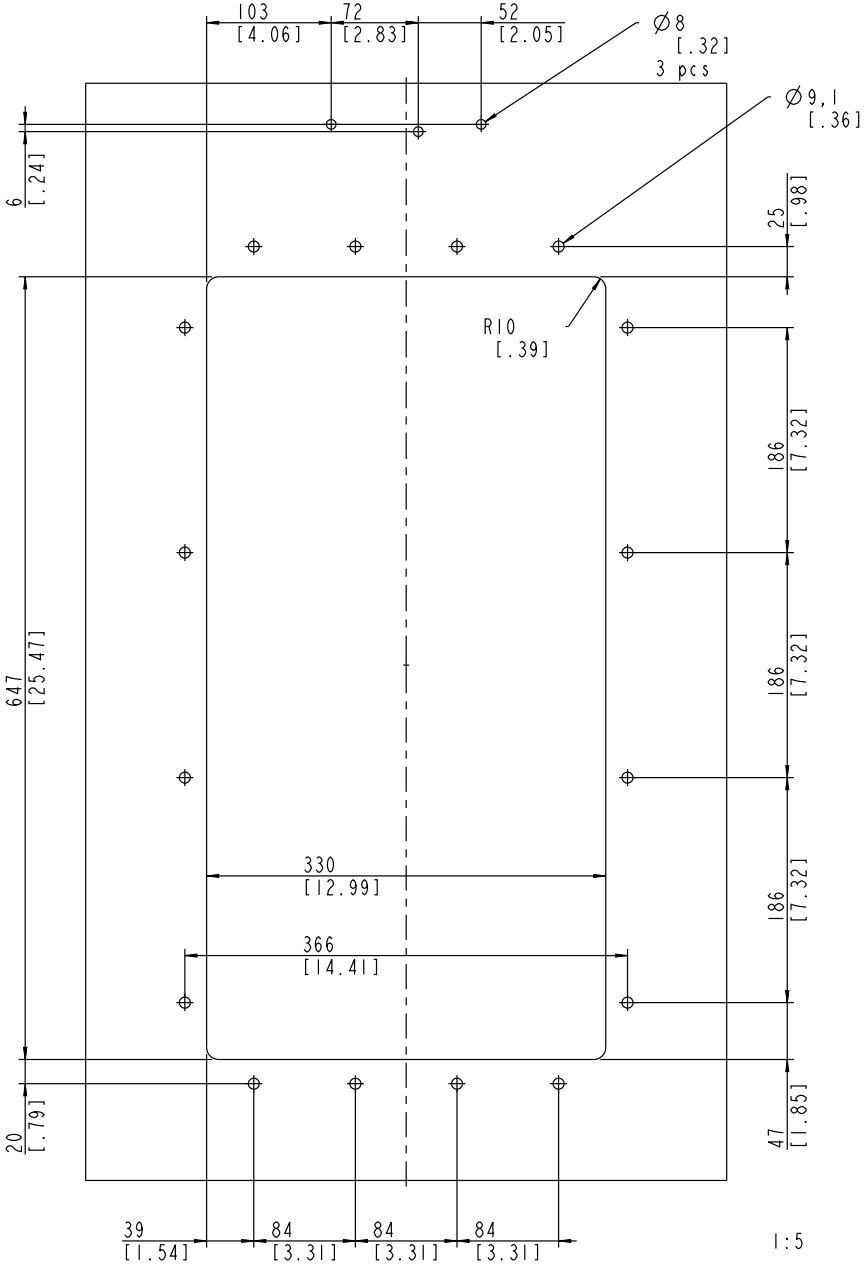

3AXD50000019324

Frame R8

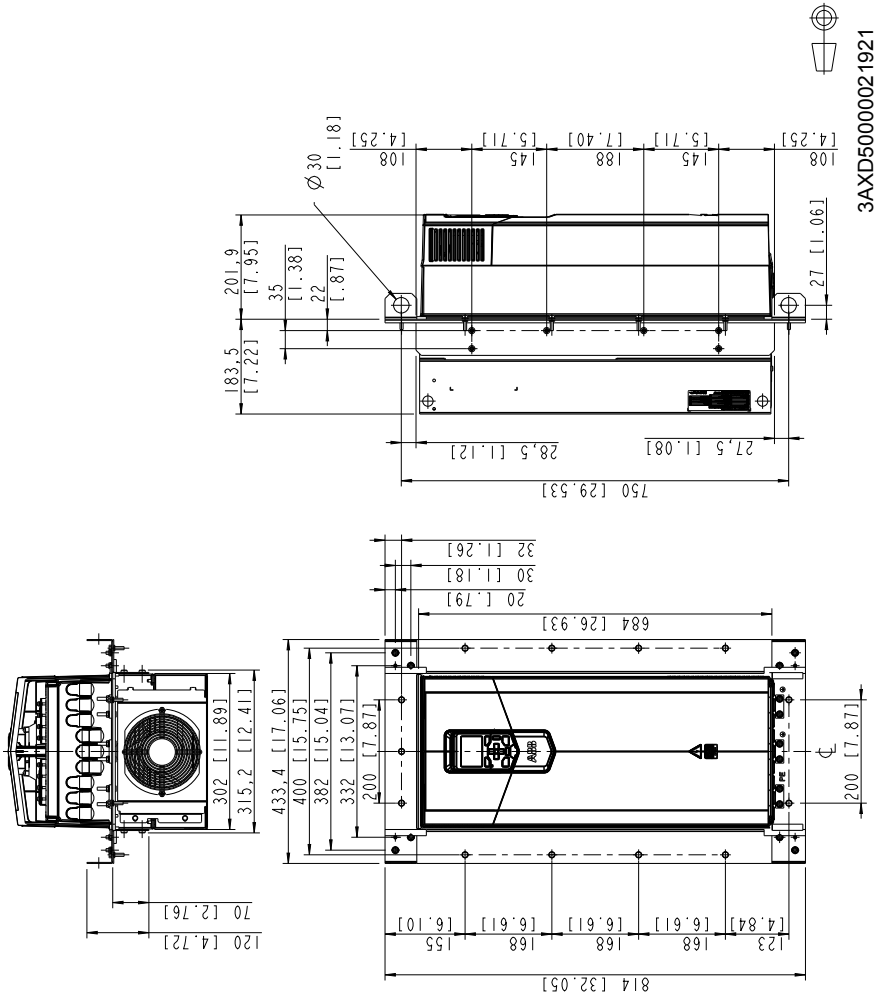
3AXD50000021921
108 [4.25]
145 [5.71]
188 [7.40]
145 [5.71]
108 [4.25]
Ø30 [1.18]
201,9 [7.95]
35 [1.38]
22 [.87]
183,5 [7.22]
27 [1.06]
28,5 [1.12]
27,5 [1.08]
750 [29.53]
32 [1.26]
30 [1.18]
20 [.79]
684 [26.93]
433,4 [17.06]
400 [15.75]
382 [15.04]
332 [13.07]
200 [7.87]
302 [11.89]
315,2 [12.41]
200 [7.87]
70 [2.76]
120 [4.72]
123 [4.84]
168 [6.61]
168 [6.61]
168 [6.61]
155 [6.10]
814 [32.05]

Hood is needed for UL Type 12 drives only

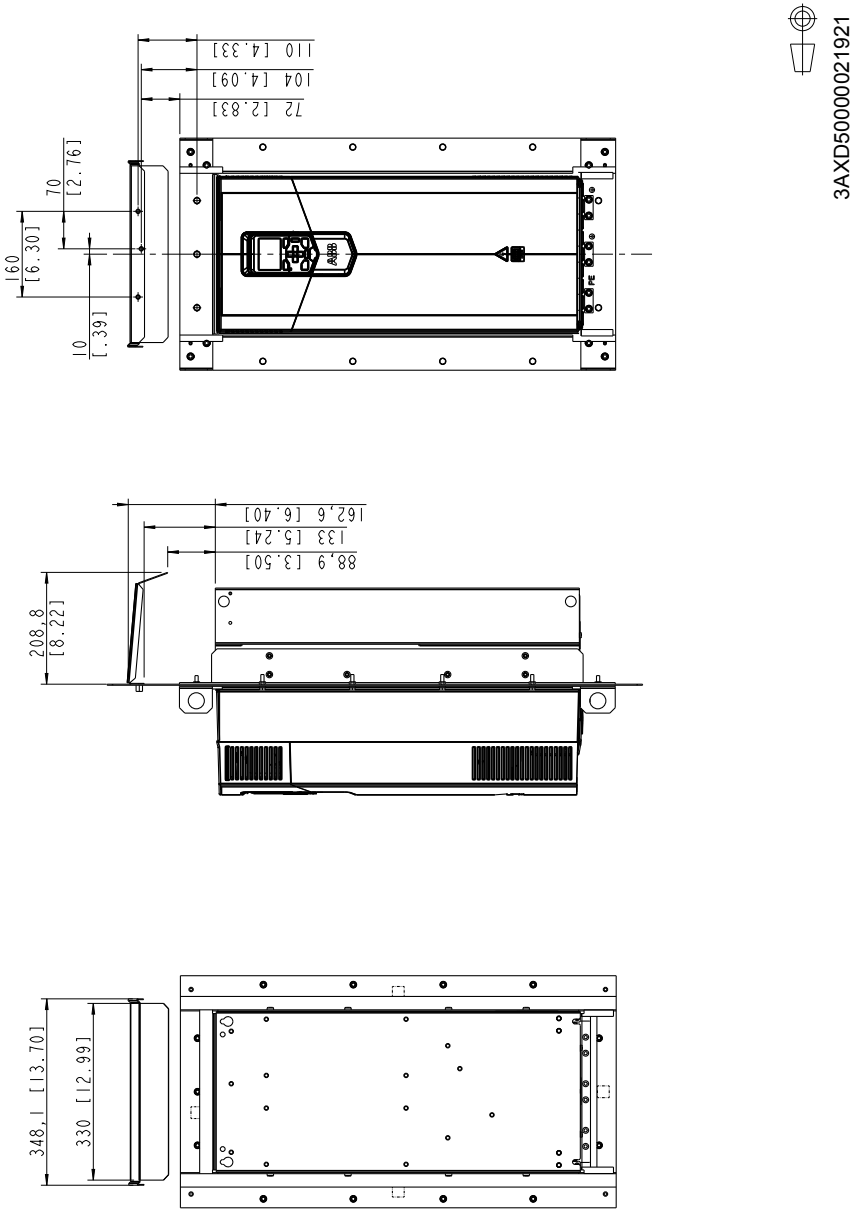

Attaching points and hole dimensions

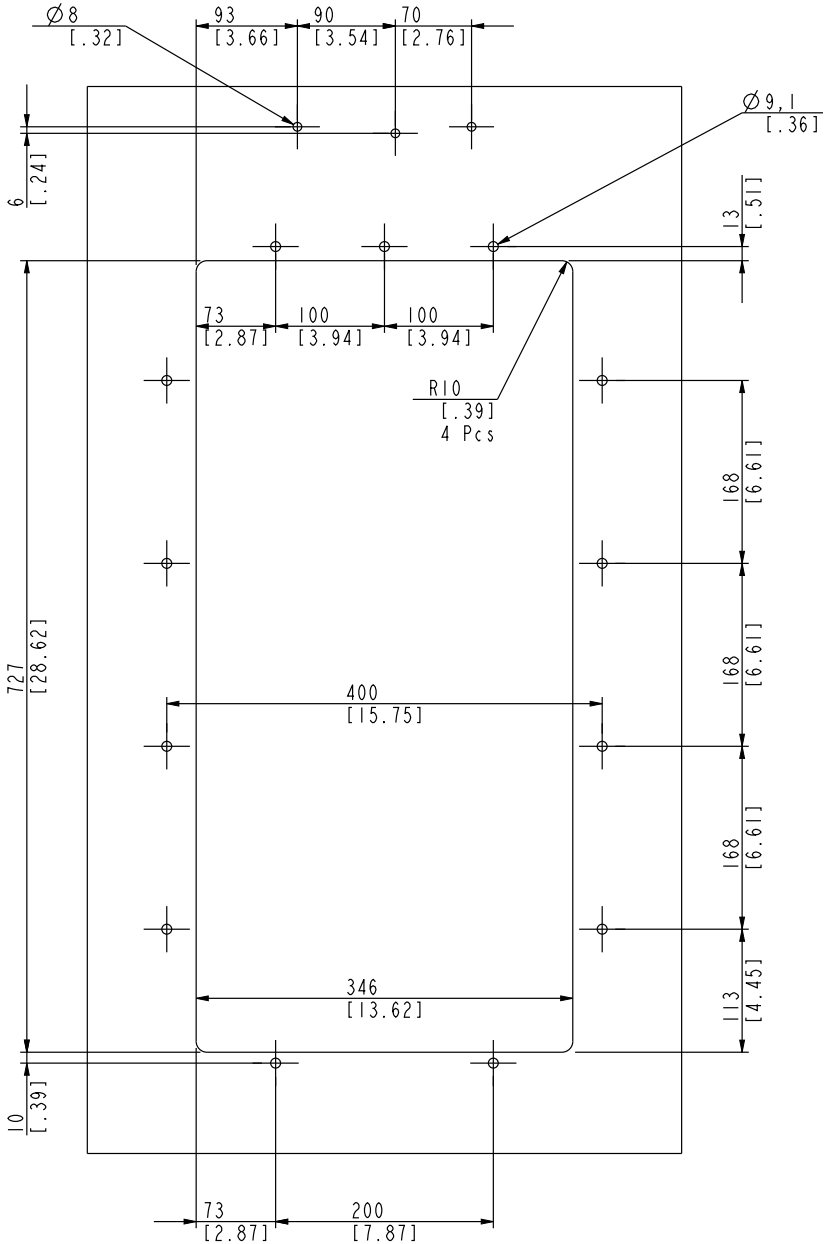

3AXD50000019325

Frame R9

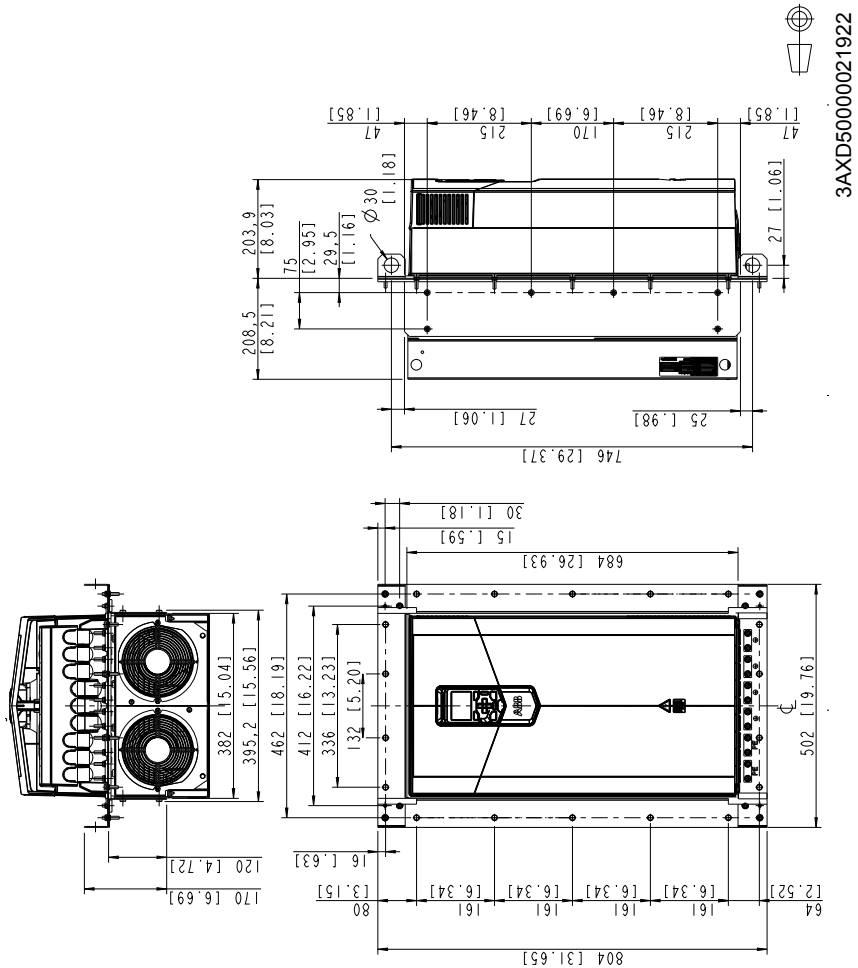
3AXD50000021922
[1.85]
47
[8.46]
215
[6.69]
170
[8.46]
215
[1.85]
47
[1.18]
Ø30
[8.03]
203.9
[2.95]
75
[1.16]
29.5
[8.21]
208.5
[1.06]
27
[1.06]
27
[.98]
25
[29.37]
746
[1.18]
30
[.59]
15
[26.93]
684
[15.04]
382
[15.56]
395.2
[18.19]
462
[16.22]
412
[13.23]
336
[5.20]
132
[19.76]
502
[4.72]
120
[6.69]
170
[.63]
16
[3.15]
80
[6.34]
161
[6.34]
161
[6.34]
161
[6.34]
161
[2.52]
64
[31.65]
804

Hood is needed for UL Type 12 drives only

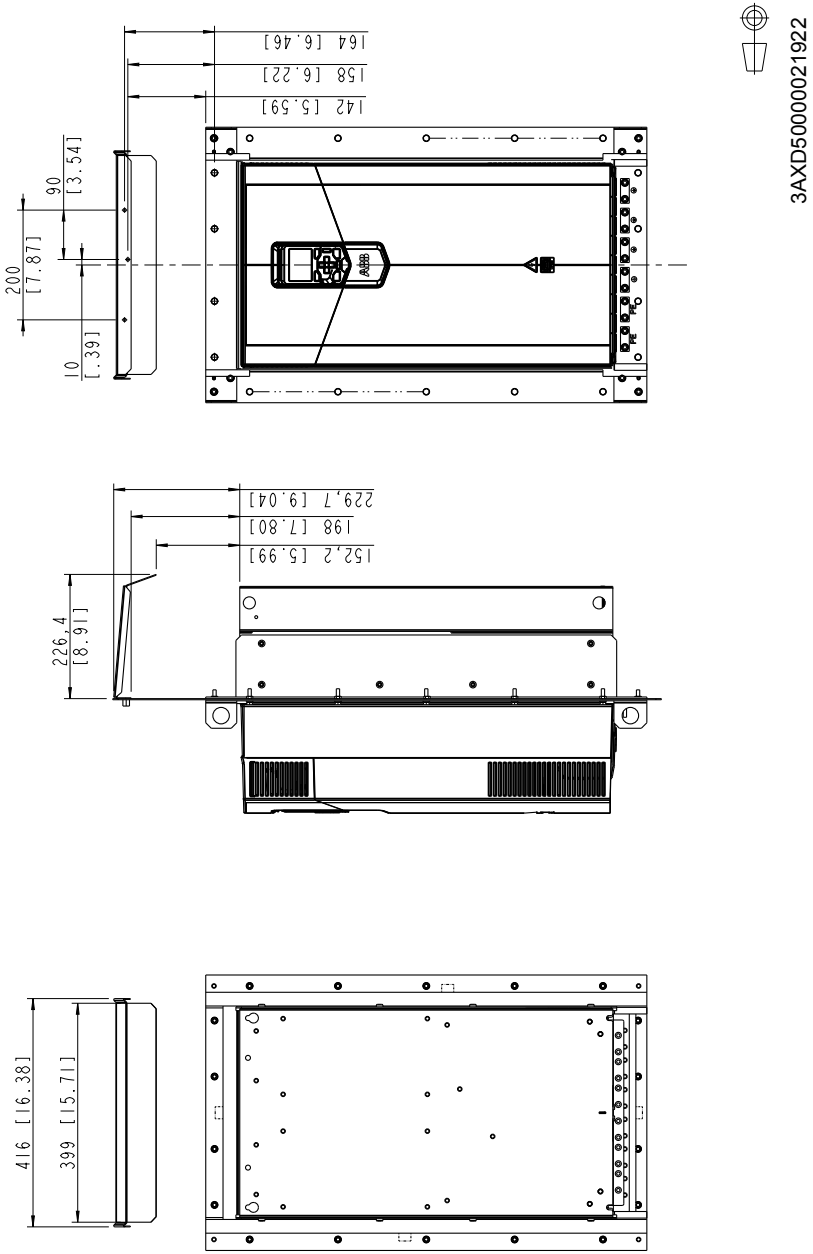

Attaching points and hole dimensions

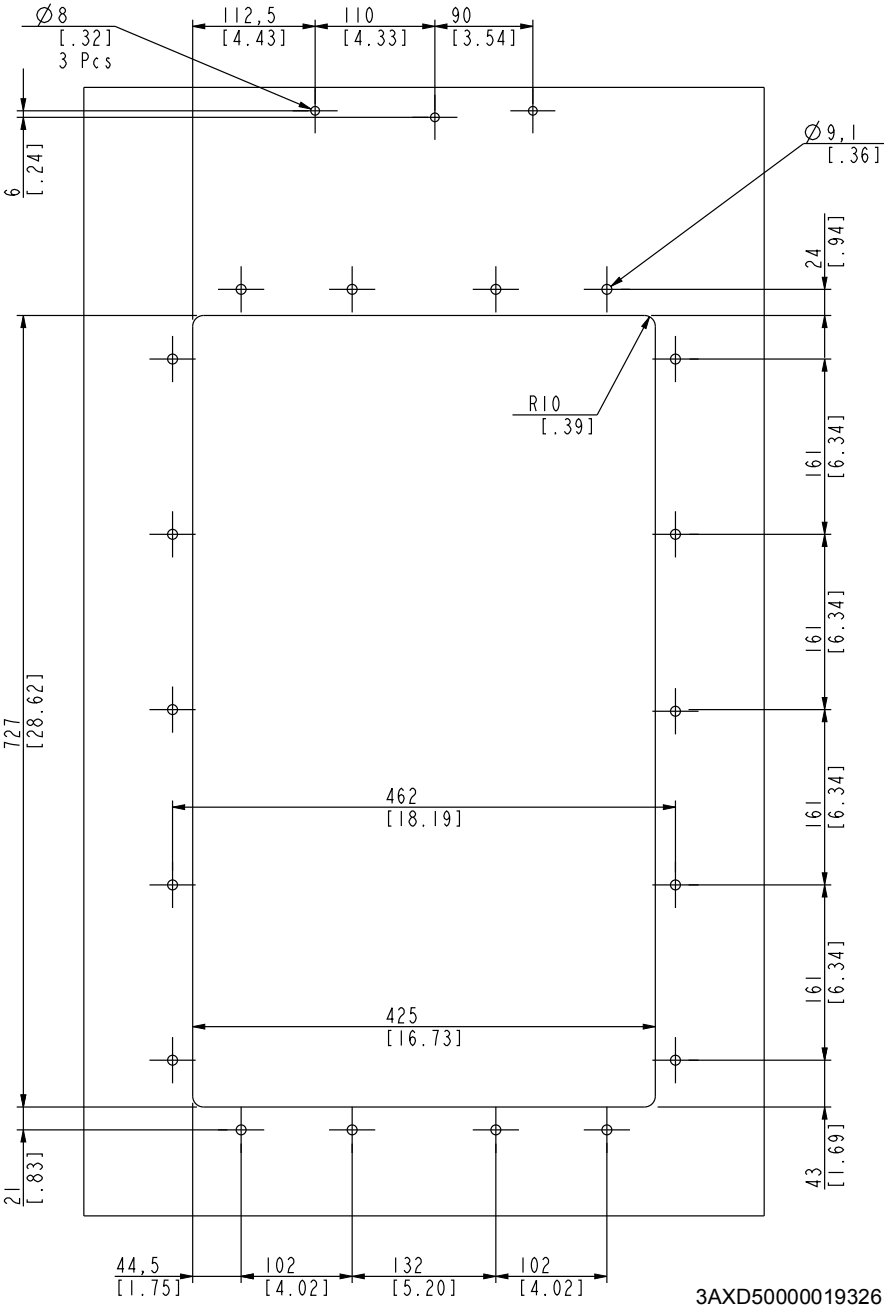

9

Dimension drawings for ACS880-11 and ACS880-31

Contents of this chapter

This chapter contains the dimension drawings of the flange mounting kits and required openings in the mounting plate.

Frame R3

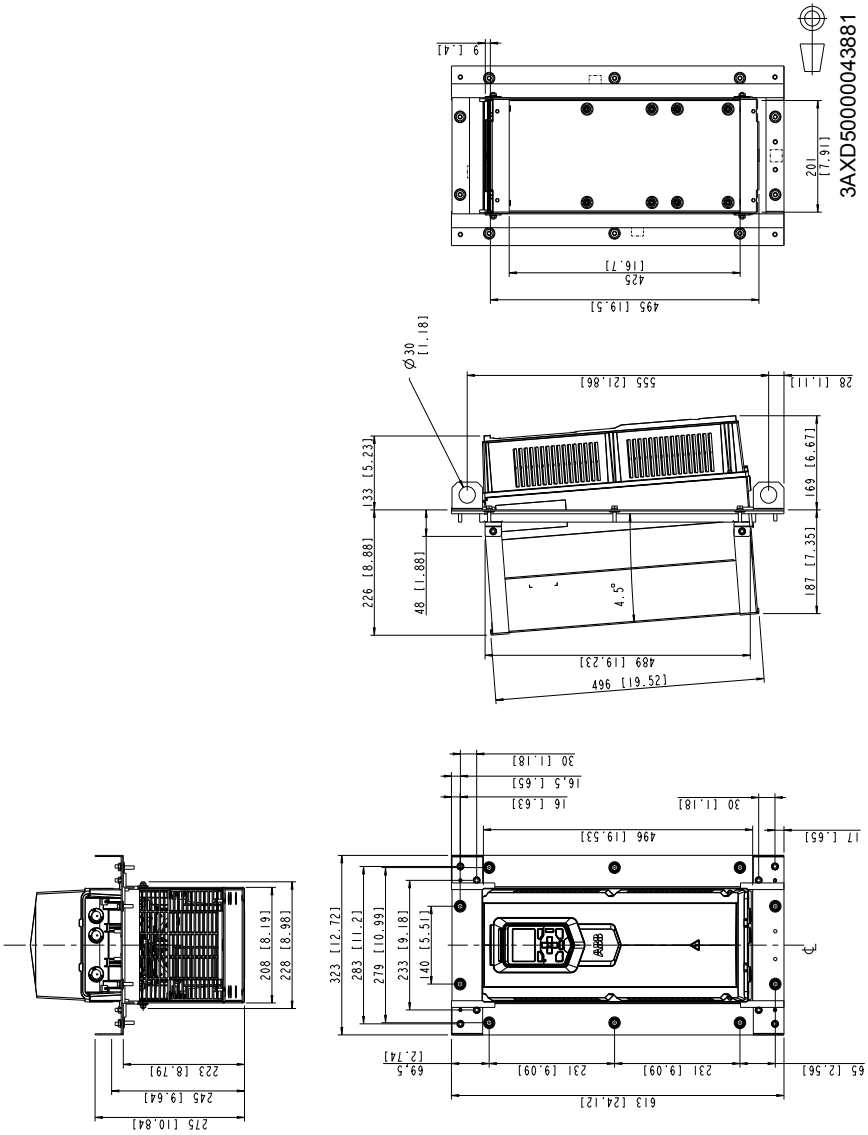
3AXD50000043881
9 [.4]
201 [7.91]
425 [16.7]
495 [19.5]
Ø 30 [1.18]
555 [21.86]
28 [1.11]
133 [5.23]
69 [6.67]
226 [8.88]
48 [1.88]
4.5°
187 [7.35]
489 [19.23]
496 [19.52]
30 [1.18]
16.5 [.65]
16 [.63]
30 [1.18]
496 [19.53]
17 [.65]
323 [12.72]
283 [11.2]
279 [10.99]
233 [9.18]
140 [5.51]
208 [8.19]
228 [8.98]
223 [8.79]
245 [9.64]
275 [10.84]
69.5 [2.74]
231 [9.09]
231 [9.09]
65 [2.56]
613 [24.12]

Attaching points and hole dimensions

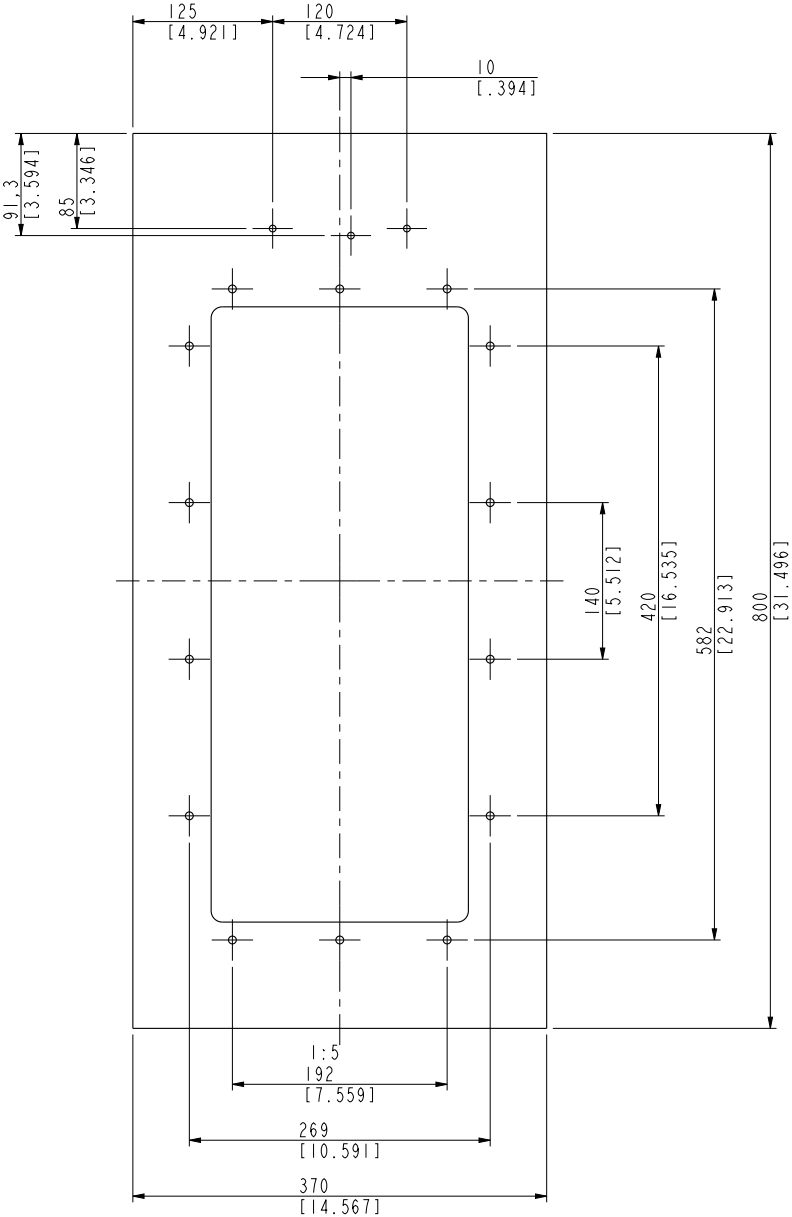

3AXD50000038117

Frame R6

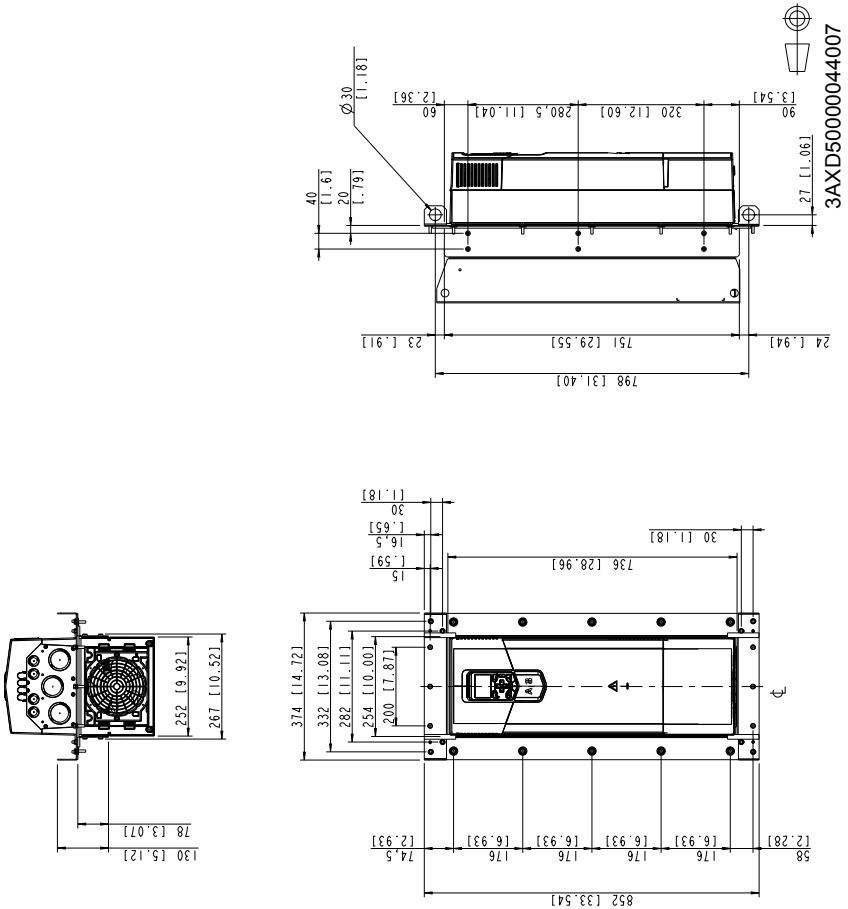
3AXD50000044007
798 [31.40]
751 [29.55]
23 [.91]
24 [.94]
90 [3.54]
320 [12.60]
280.5 [11.04]
60 [2.36]
Ø 30 [1.18]
40 [1.6]
20 [.79]
27 [1.06]
852 [33.54]
58 [2.28]
176 [6.93]
176 [6.93]
176 [6.93]
176 [6.93]
74.5 [2.93]
736 [28.96]
30 [1.18]
15 [.59]
16.5 [.65]
30 [1.18]
374 [14.72]
332 [13.08]
282 [11.11]
254 [10.00]
200 [7.87]
267 [10.52]
252 [9.92]
130 [5.12]
78 [3.07]

Hood is needed for UL Type 12 drives only

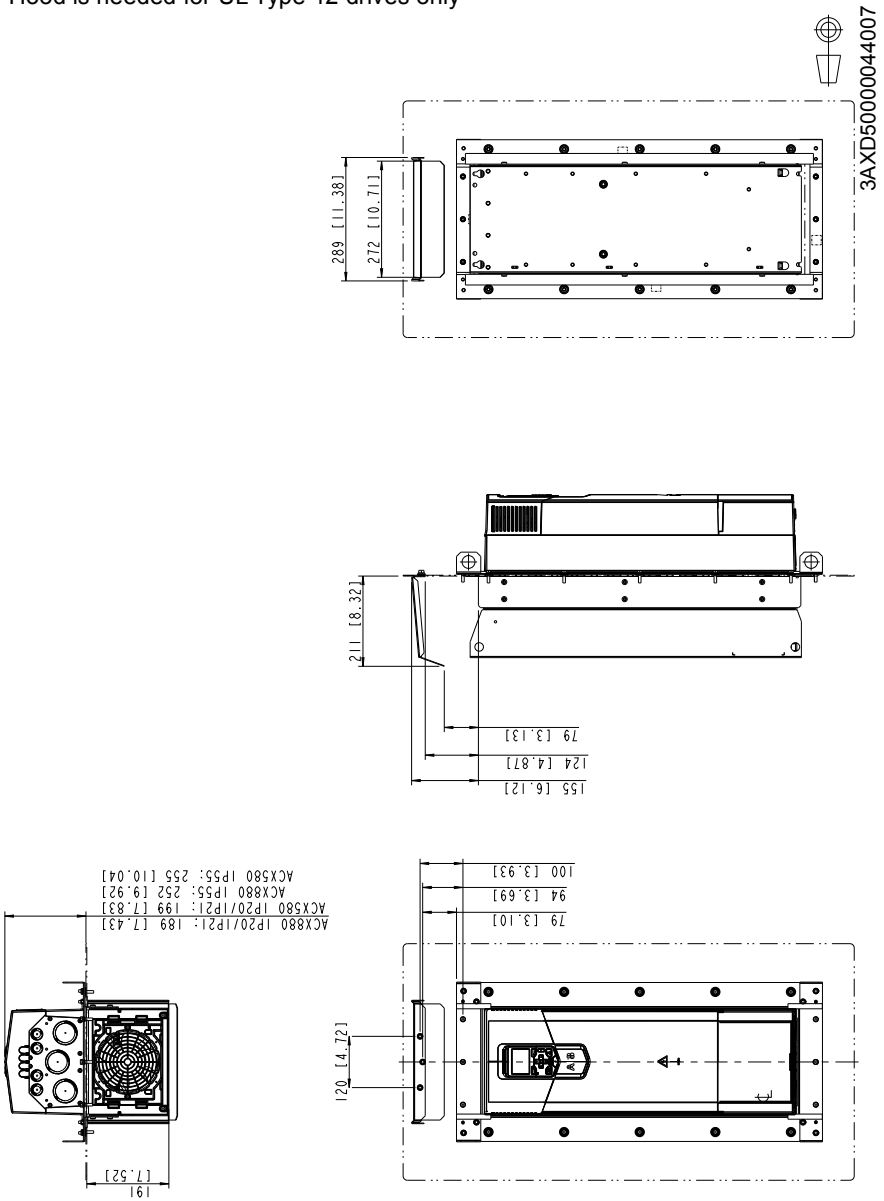

Attaching points and hole dimensions

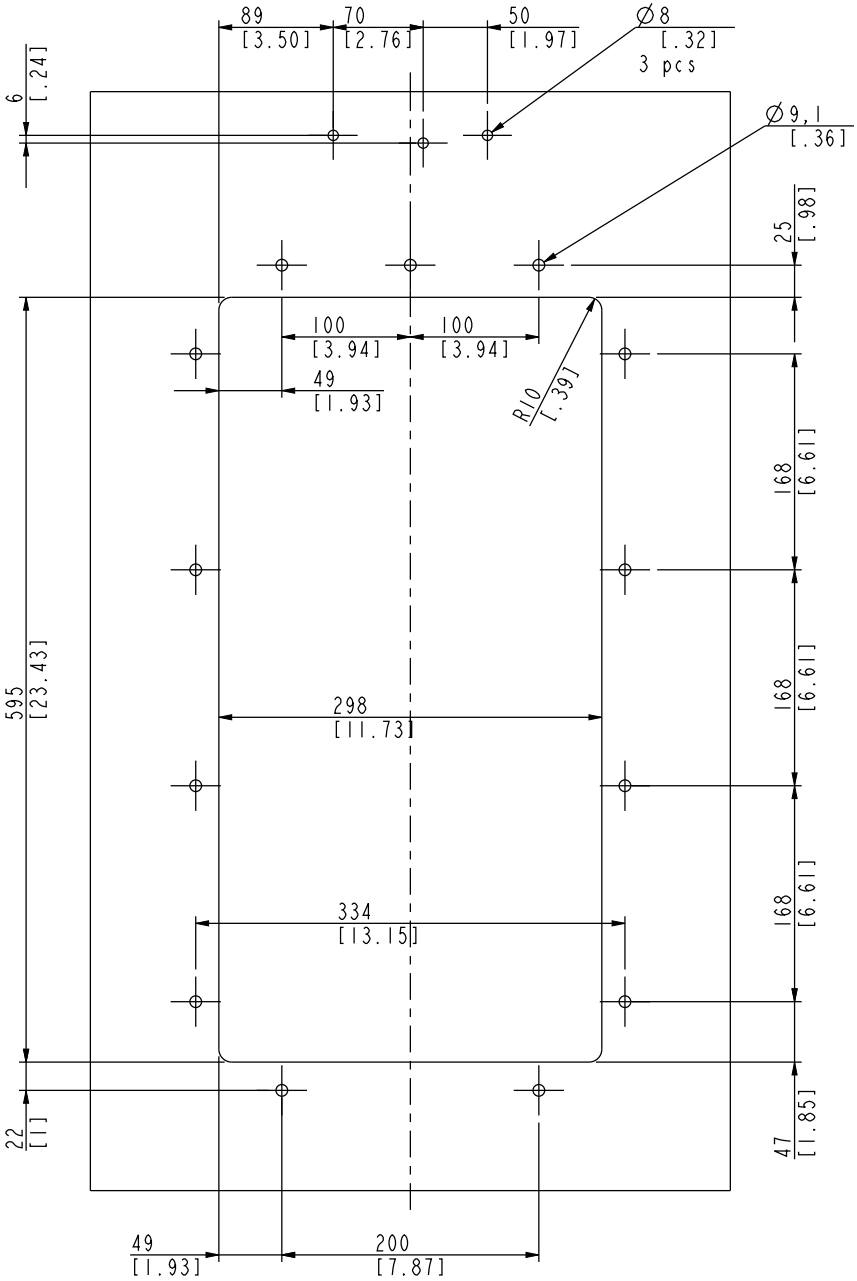

3AXD50000019323

Frame R8

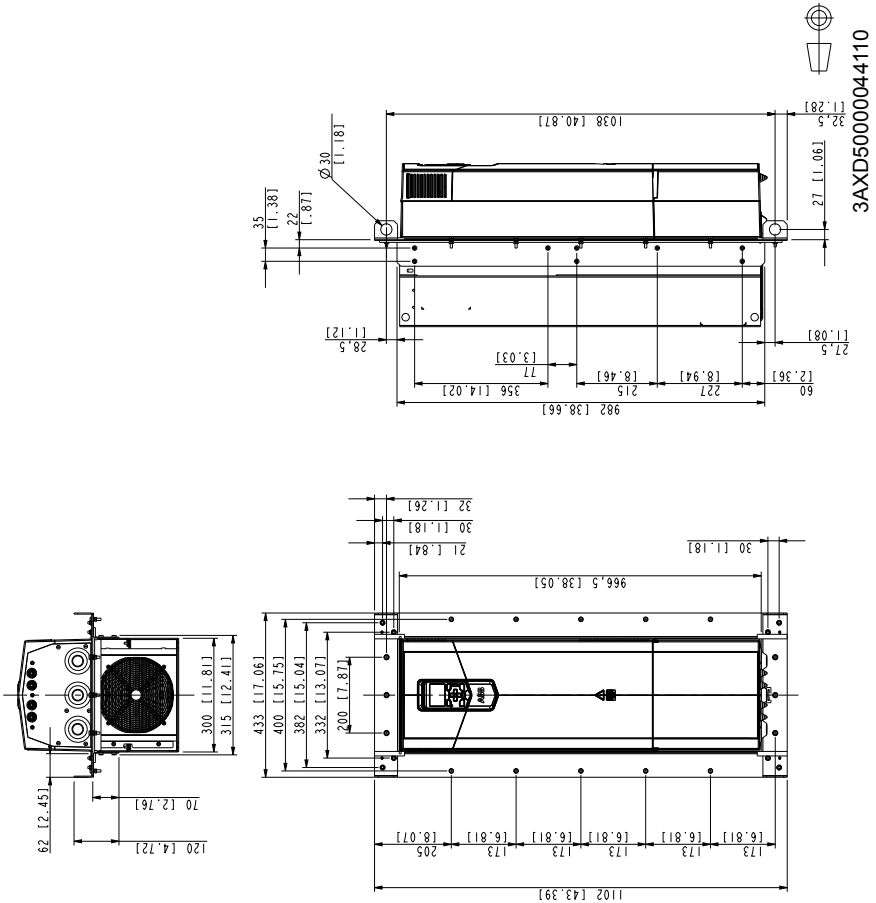
3AXD50000044110
982 [38.66]
60 [2.36]
227 [8.94]
215 [8.46]
356 [14.02]
77 [3.03]
28,5 [1.12]
27,5 [1.08]
35 [1.38]
22 [.87]
Ø30 [1.18]
1038 [40.87]
27 [1.06]
32,5 [1.28]
1102 [43.39]
173 [6.81]
173 [6.81]
173 [6.81]
173 [6.81]
173 [6.81]
205 [8.07]
966,5 [38.05]
30 [1.18]
21 [.84]
30 [1.18]
32 [1.26]
433 [17.06]
400 [15.75]
382 [15.04]
332 [13.07]
200 [7.87]
300 [11.8]
315 [12.4]
62 [2.45]
70 [2.76]
120 [4.72]

Hood is needed for UL Type 12 drives only

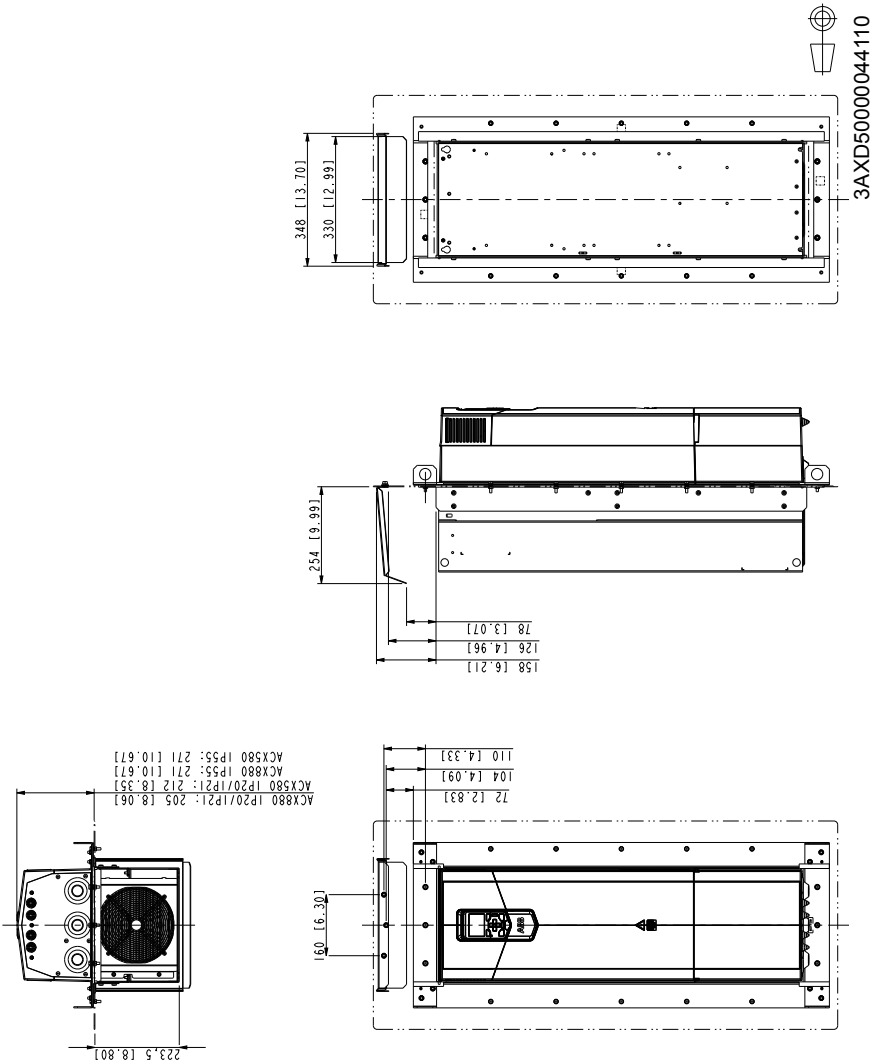

Attaching points and hole dimensions

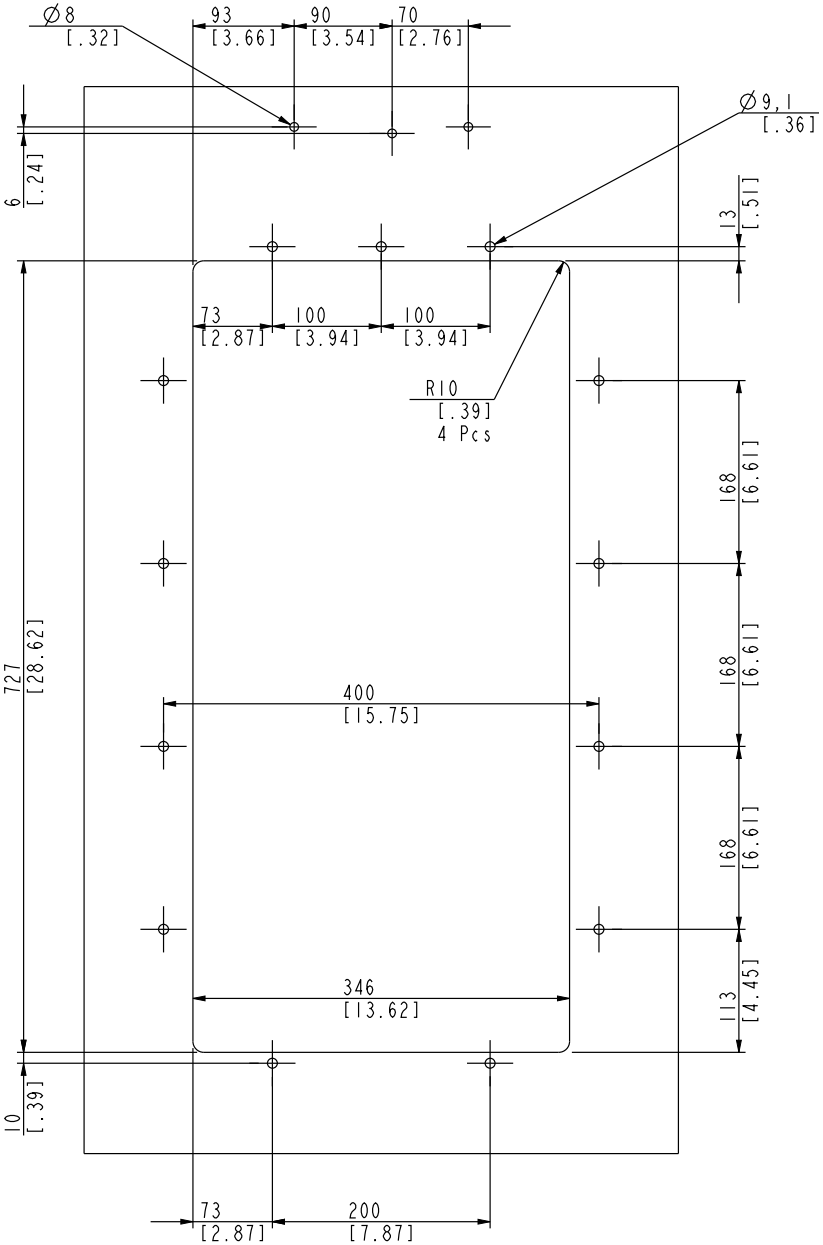

3AXD50000019325

10

Dimension drawings for ACH580-31 and ACQ580-31

Contents of this chapter

This chapter contains the dimension drawings of the flange mounting kits and required openings in the mounting plate.

Note! Some dimension drawings display the face of the ACH580-31 model instead of the ACQ580-31 model and vice versa. The dimensions are still applicable for both models.

Frame R3

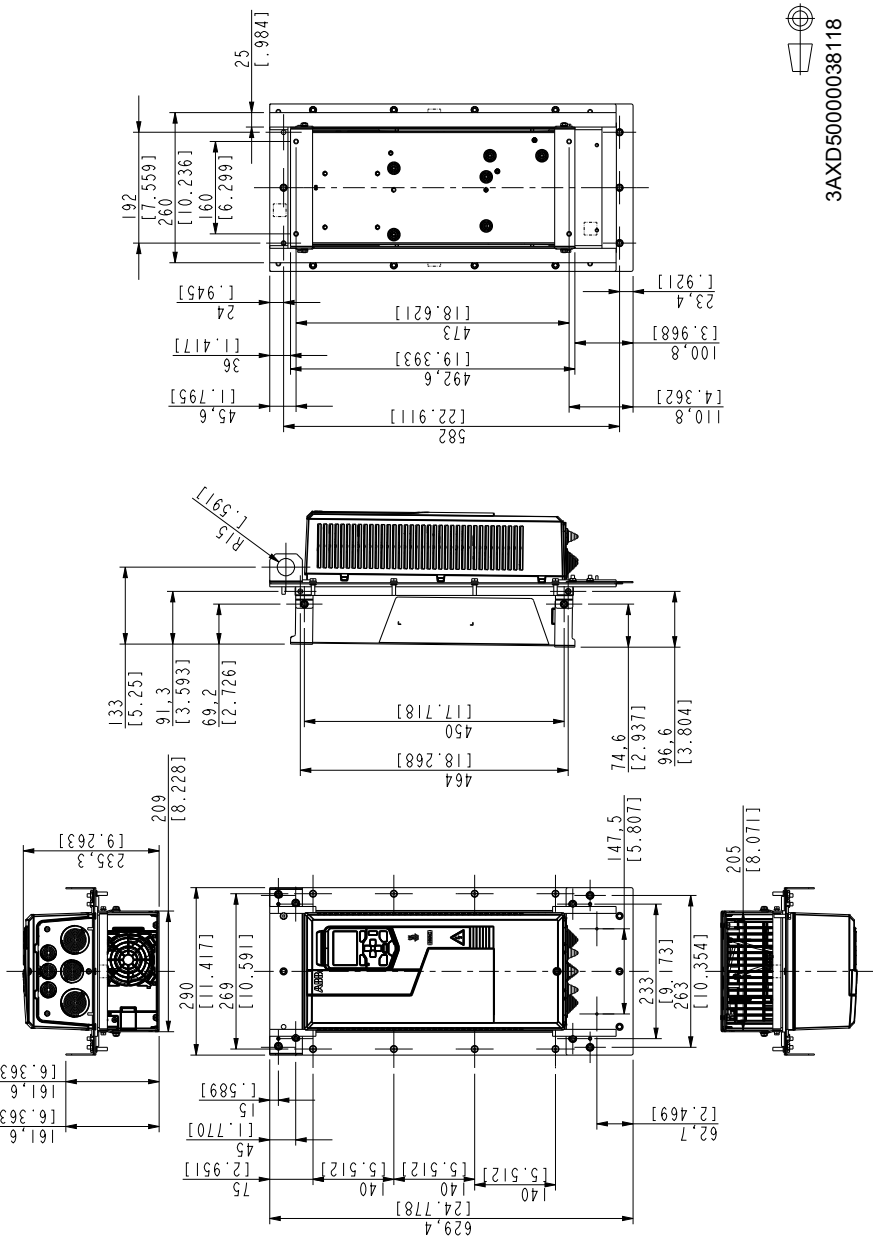
3AXD50000038118
25 [.984]
192 [7.559]
260 [10.236]
160 [6.299]
24 [.945]
23,4 [.921]
473 [18.621]
36 [1.417]
100,8 [3.968]
492,6 [19.393]
45,6 [1.795]
110,8 [4.362]
582 [22.911]
R15 [.591]
133 [5.25]
91,3 [3.593]
69,2 [2.726]
450 [17.718]
464 [18.268]
74,6 [2.937]
96,6 [3.804]
209 [8.228]
235,3 [9.263]
147,5 [5.807]
205 [8.071]
290 [11.417]
269 [10.591]
233 [9.173]
263 [10.354]
161,6 [6.363]
161,6 [6.363]
15 [.589]
45 [1.770]
75 [2.951]
5,512 5,512 5,512
140 140
629,4 [24.778]
62,7 [2.469]

Attaching points and hole dimensions

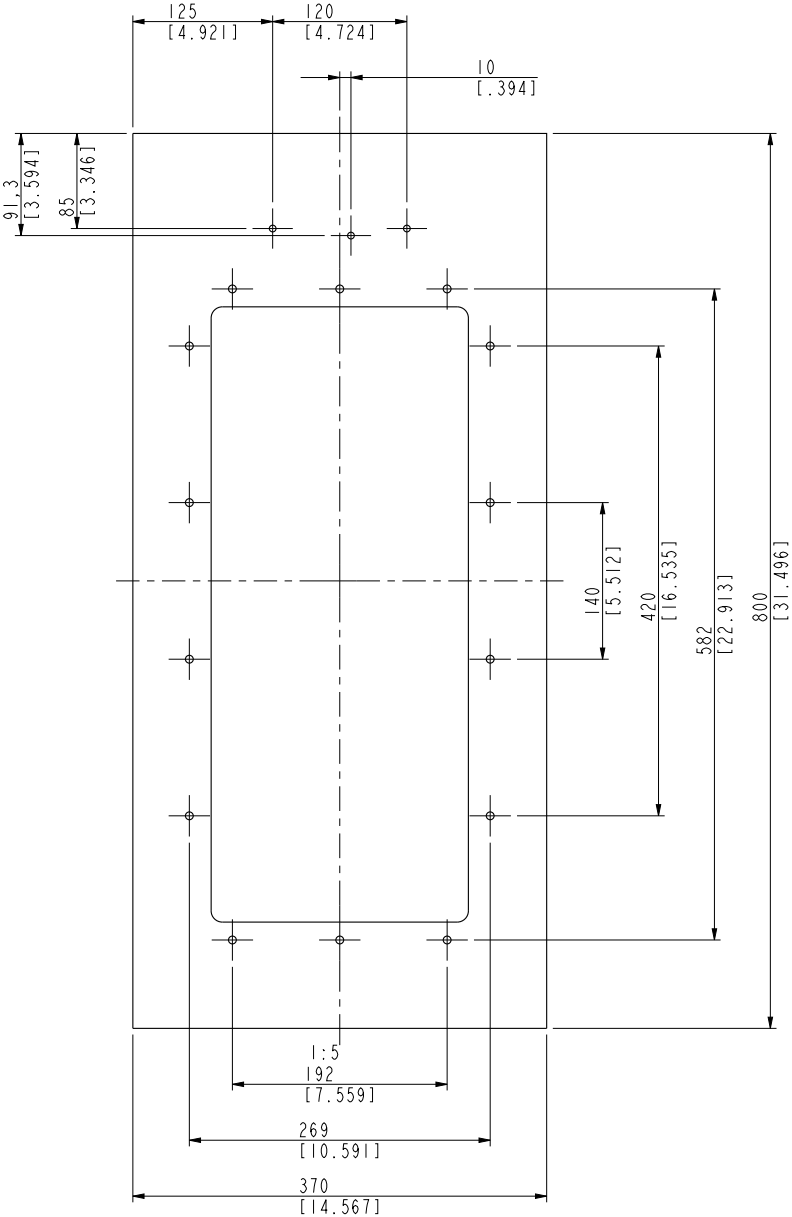

3AXD50000038117

Frame R6

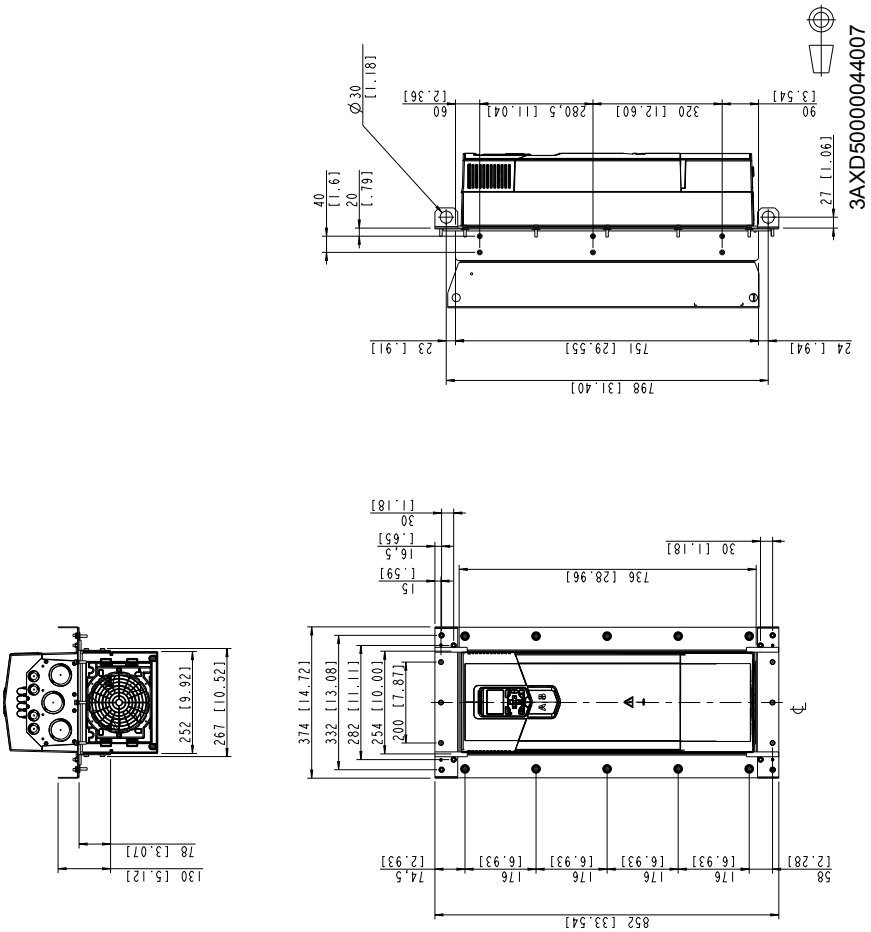
3AXD50000044007
24 [.94]
751 [29.55]
23 [.91]
798 [31.40]
90
[3.54]
320 [12.60]
280.5 [11.04]
60
[2.36]
27 [1.06]
Ø 30
[1.18]
20
[.79]
40
[1.6]
58
[2.28]
176
[6.93]
176
[6.93]
176
[6.93]
176
[6.93]
74.5
[2.93]
852 [33.54]
30 [1.18]
736 [28.96]
15
[.59]
16.5
[.65]
30
[1.18]
374 [14.72]
332 [13.08]
282 [11.11]
254 [10.00]
200 [7.87]
252 [9.92]
267 [10.52]
78 [3.07]
130 [5.12]

Hood is needed for UL Type 12 drives only

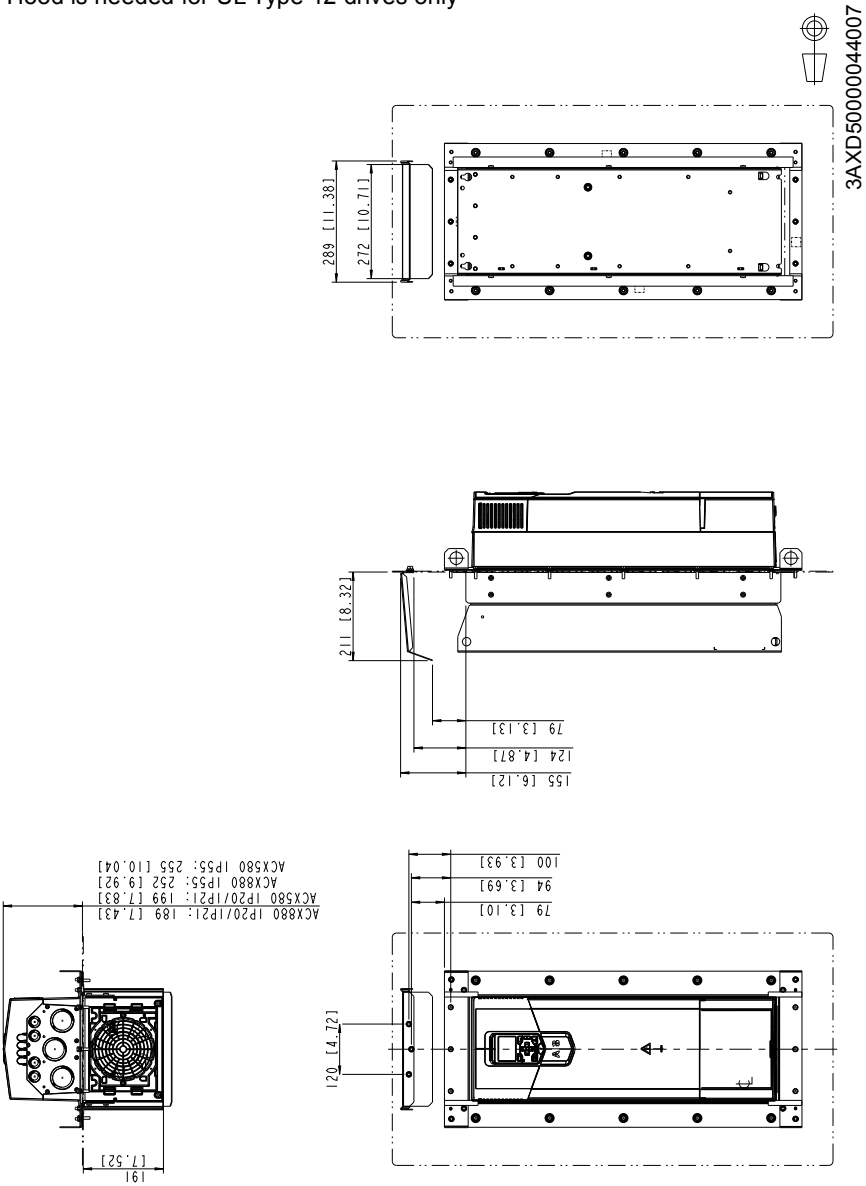

Attaching points and hole dimensions

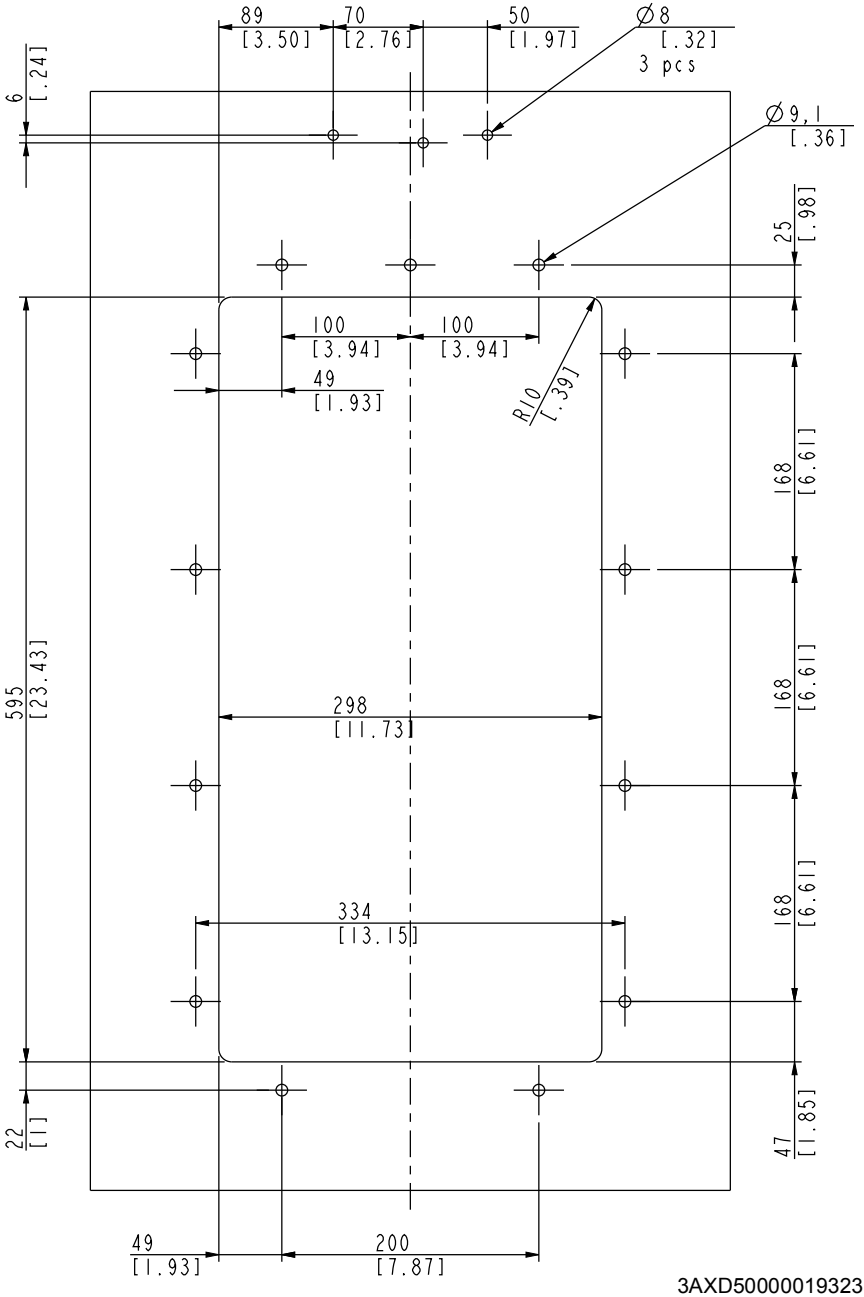

3AXD50000019323

Frame R8

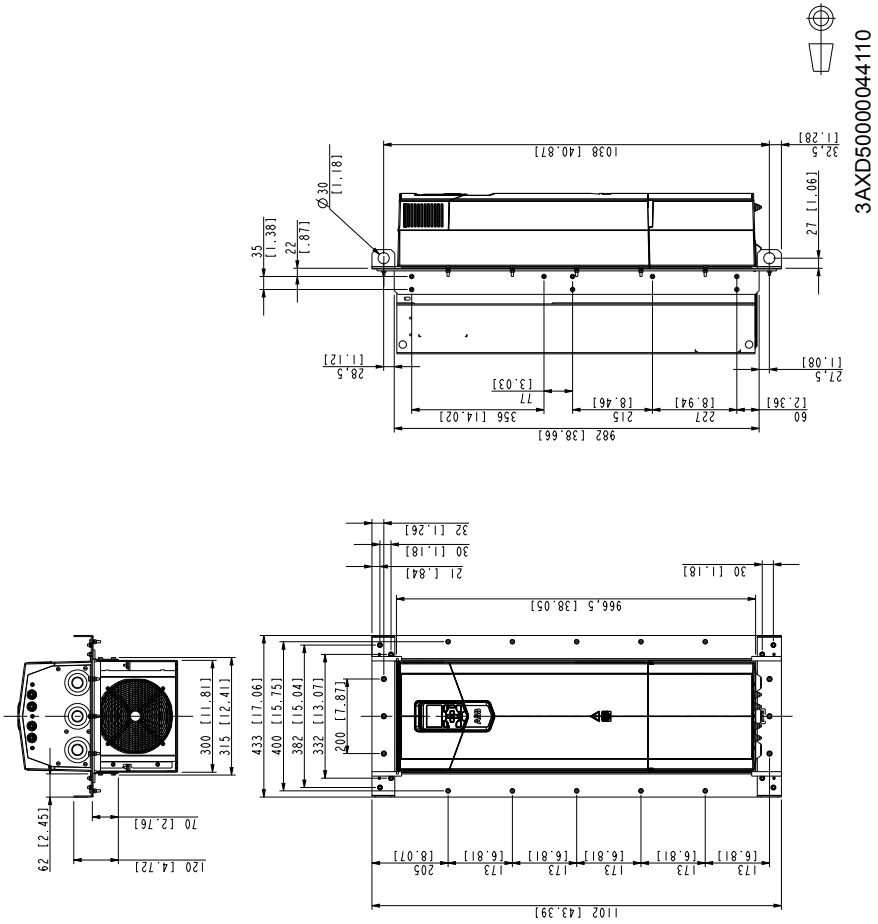
3AXD50000044110
982 [38.66]
60 [2.36]
227 [8.94]
215 [8.46]
356 [14.02]
77 [3.03]
28,5 [1.12]
27,5 [1.08]
35 [1.38]
22 [.87]
Ø30 [1.18]
1038 [40.87]
32,5 [1.28]
27 [1.06]
1102 [43.39]
205 [8.07]
173 [6.81]
173 [6.81]
173 [6.81]
173 [6.81]
173 [6.81]
173 [6.81]
966,5 [38.05]
21 [.84]
30 [1.18]
30 [1.18]
32 [1.26]
433 [17.06]
400 [15.75]
382 [15.04]
332 [13.07]
200 [7.87]
300 [11.81]
315 [12.41]
70 [2.76]
120 [4.72]
62 [2.45]

Hood is needed for UL Type 12 drives only

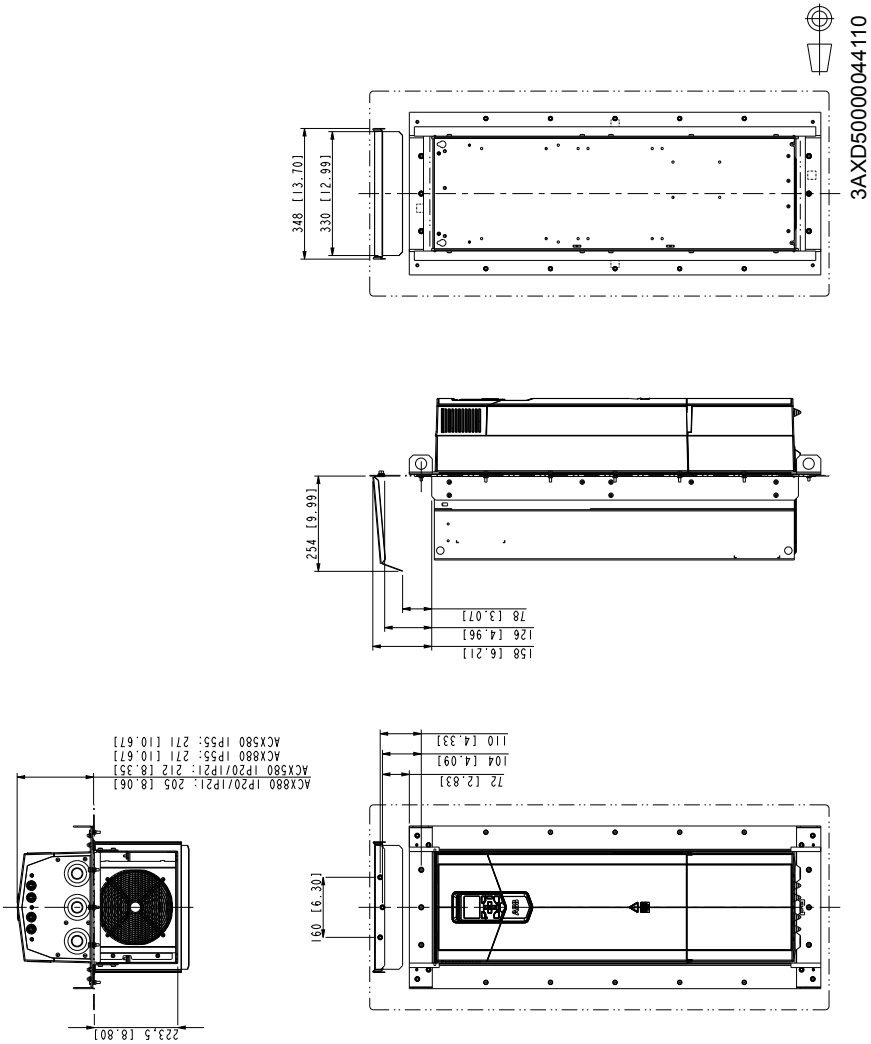

Attaching points and hole dimensions

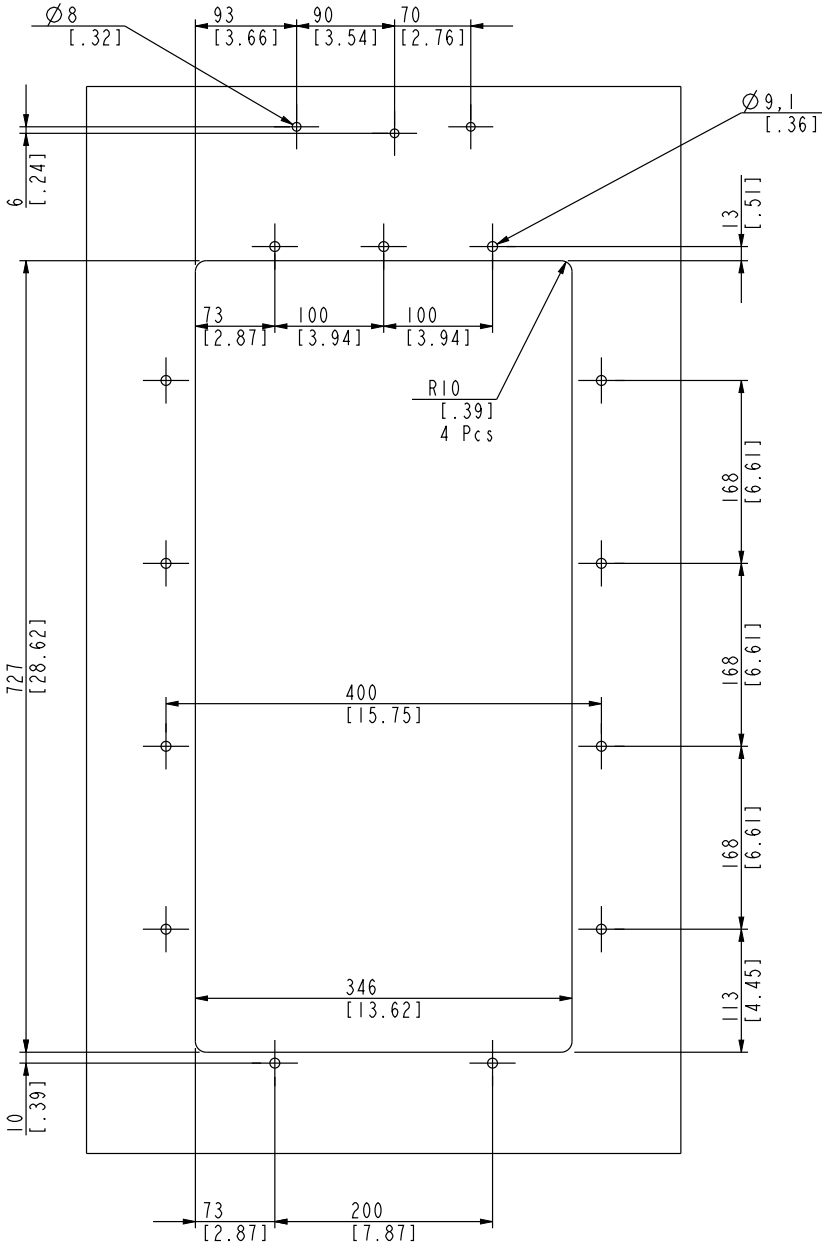

3AXD50000019325

11

ACS880-01 mounting examples

Contents of this chapter

This chapter contains ACS880-01 flange mounting examples in a cooling channel.

Frame R1

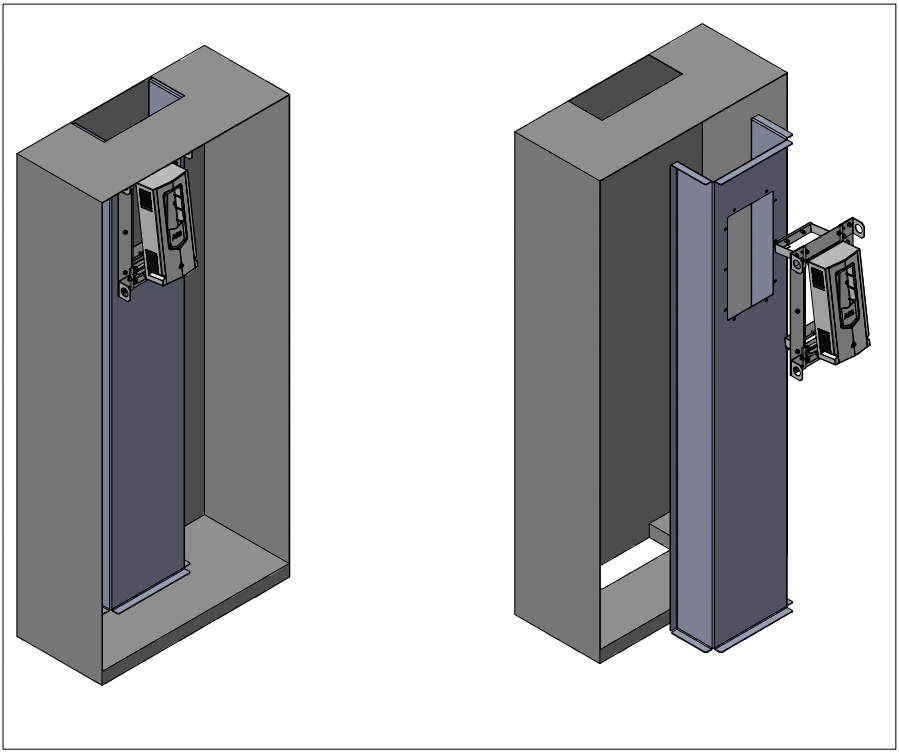

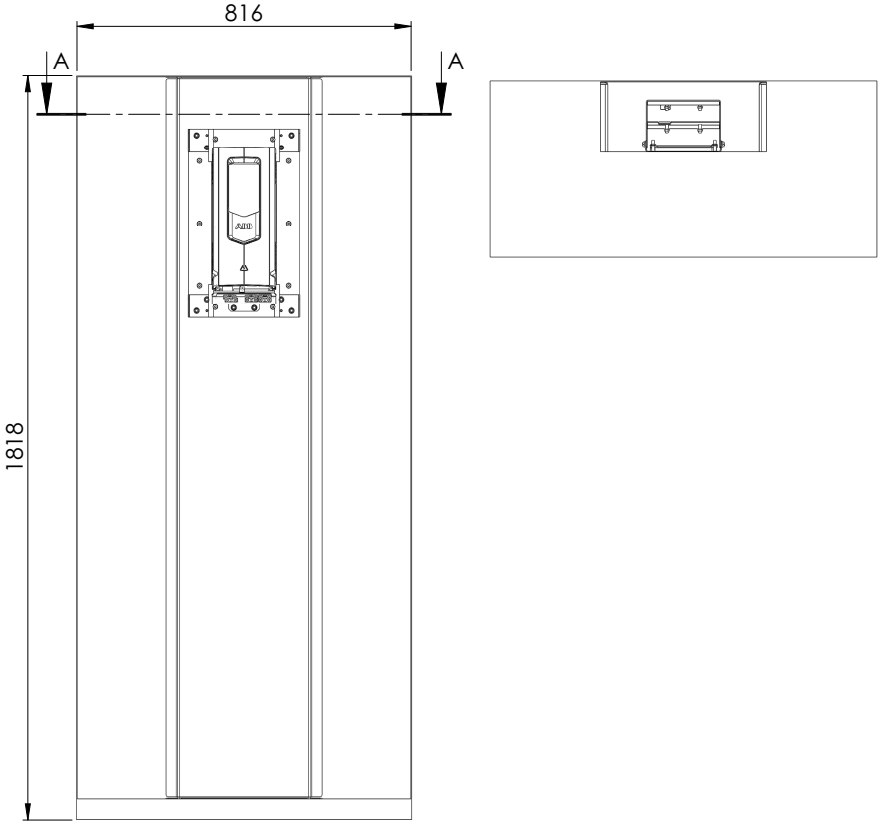

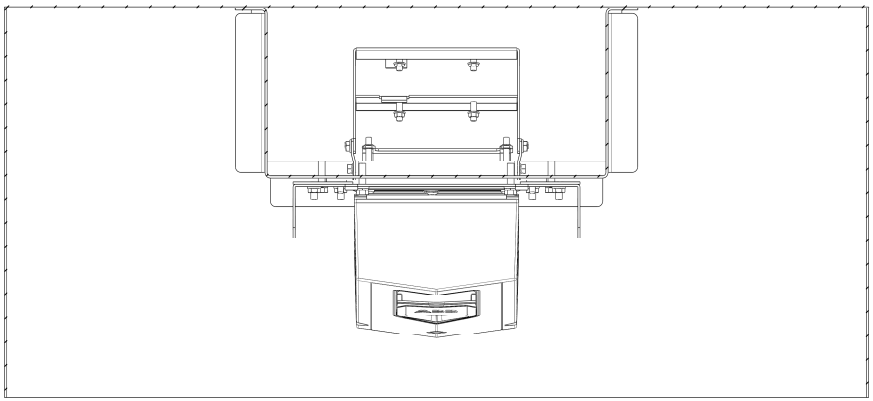

A-A (1 : 5)

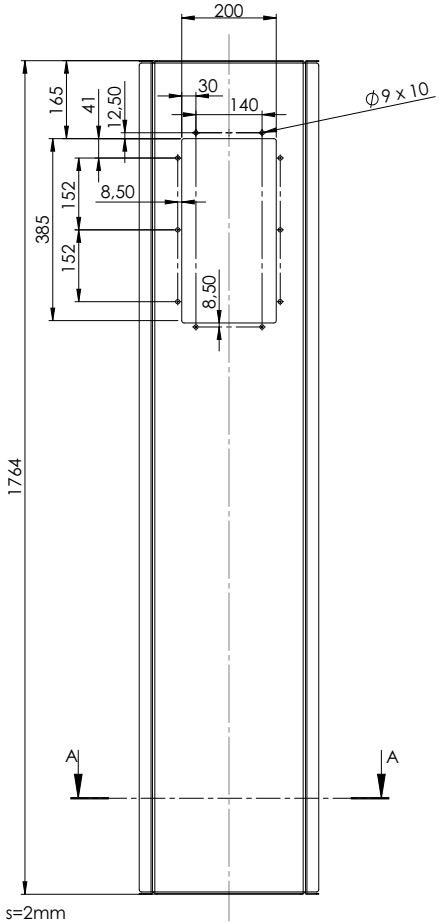

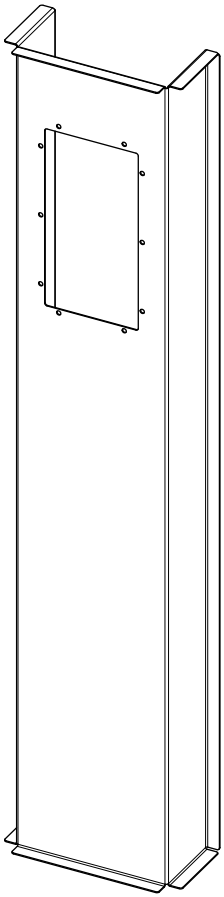

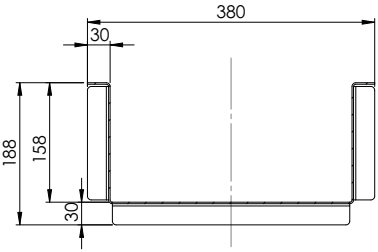

SECTIONA-A SCALE1 : 5

Frame R2

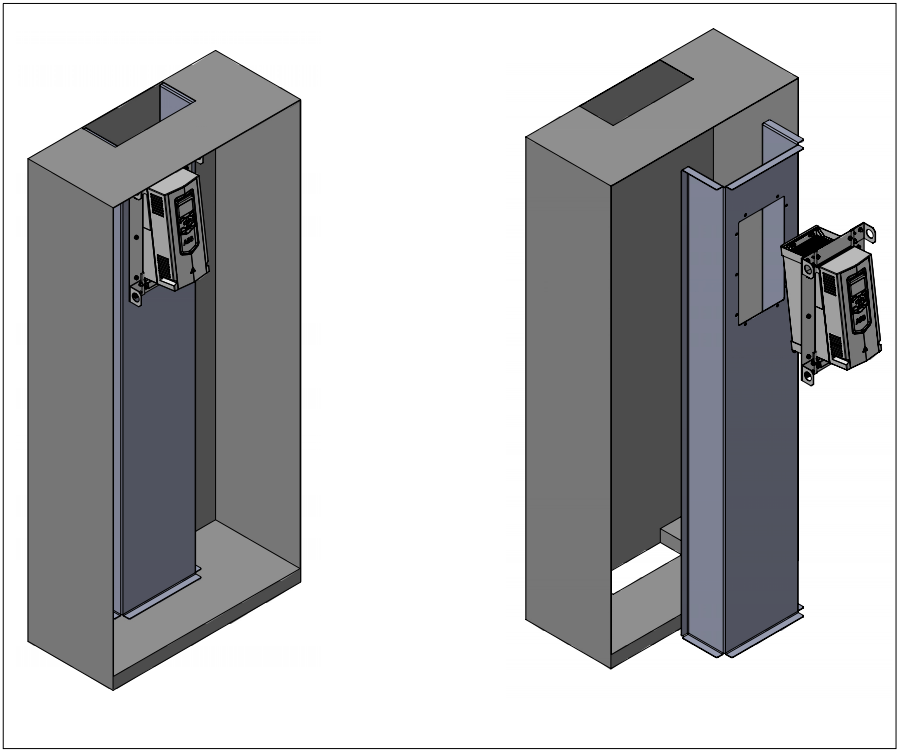

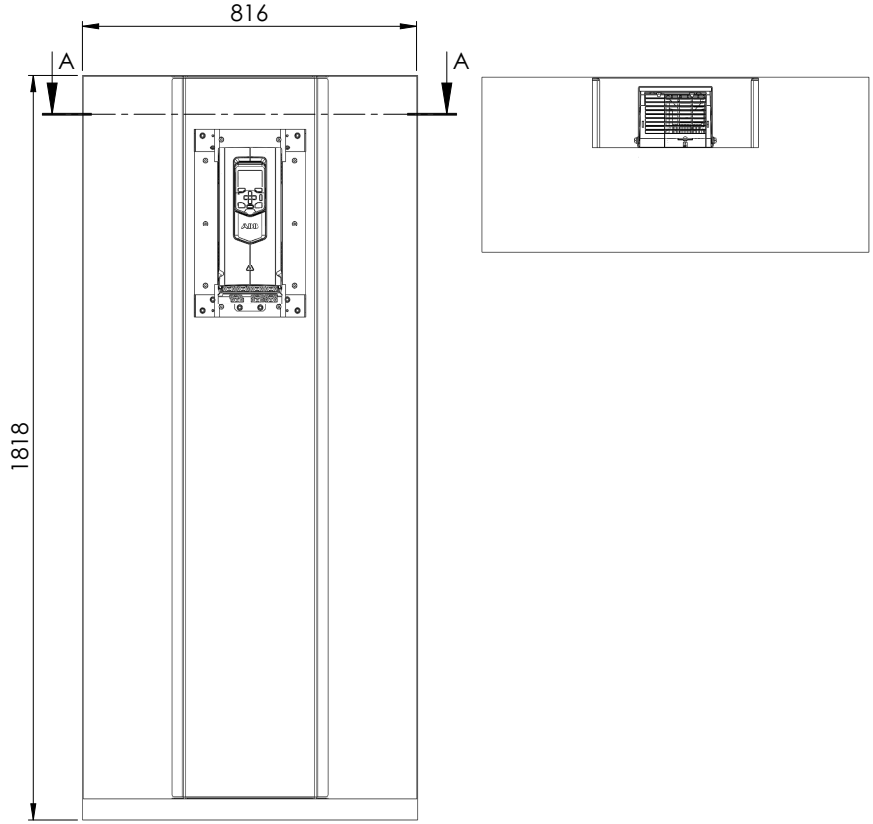

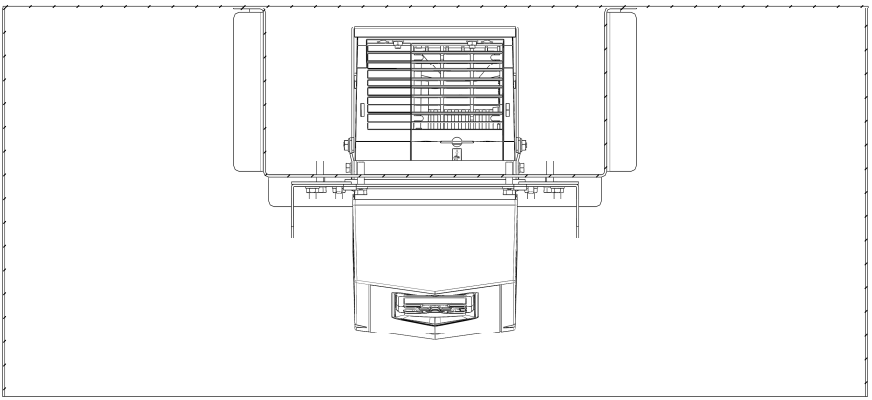

A-A (1 : 5)

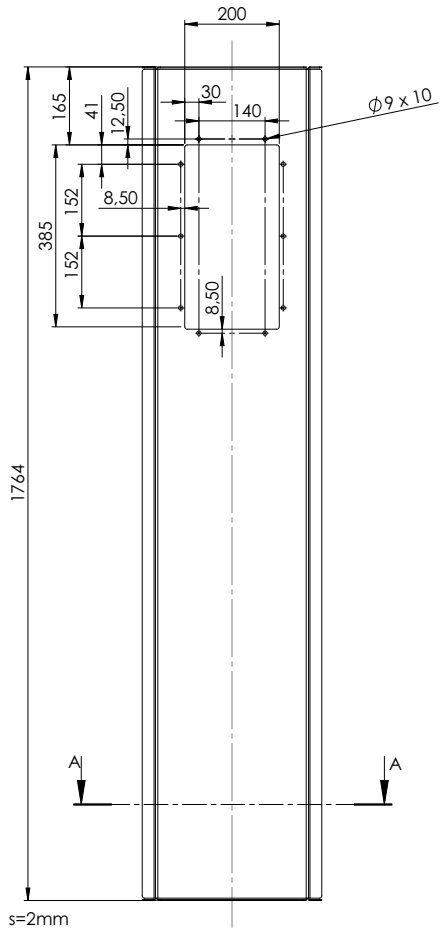

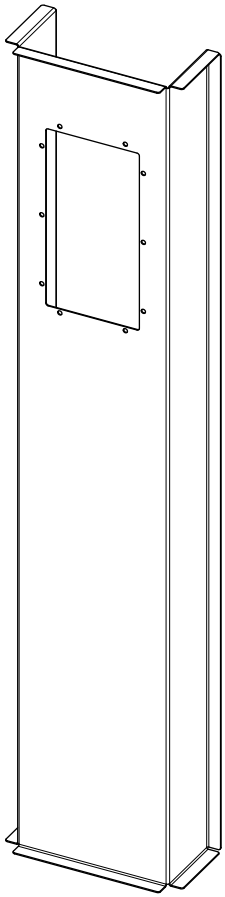

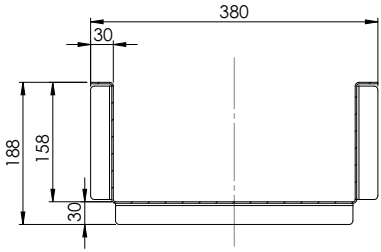

SECTIONA-A SCALE1 : 5

Frame R3

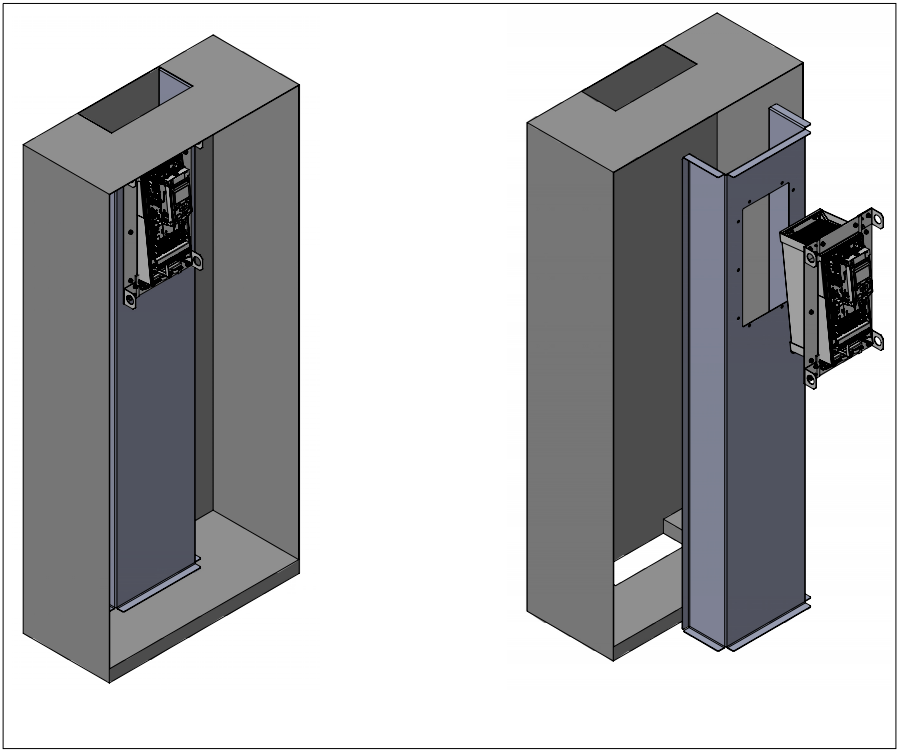

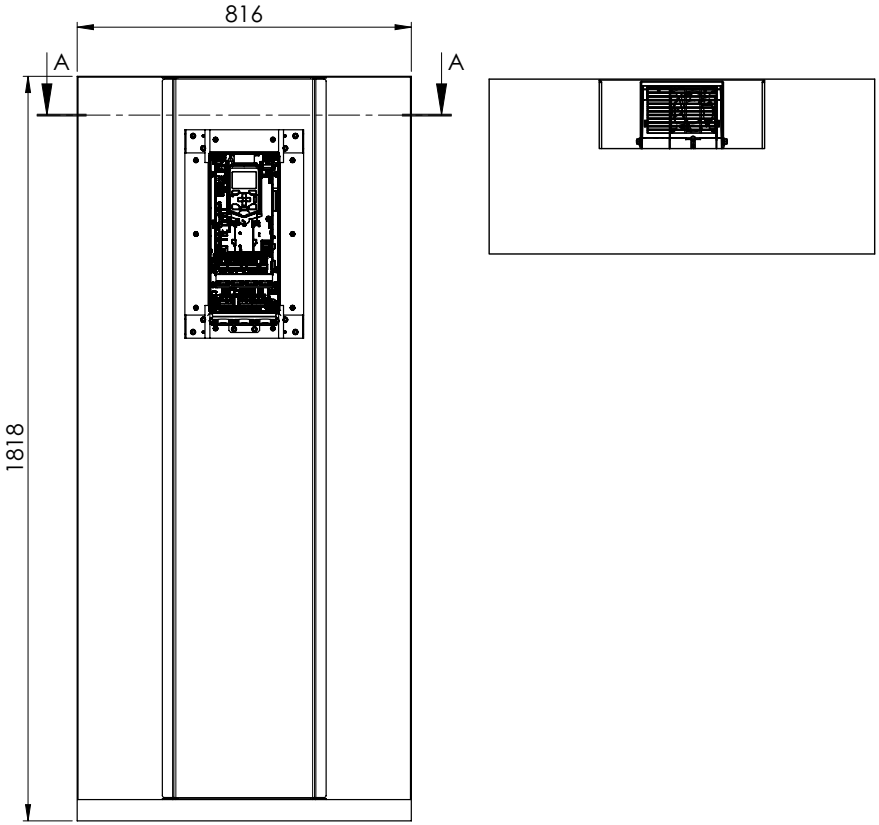

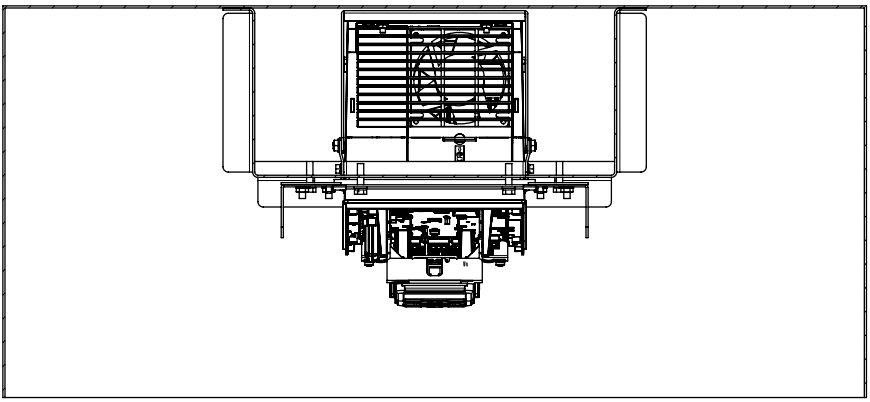

A-A (1 : 5)

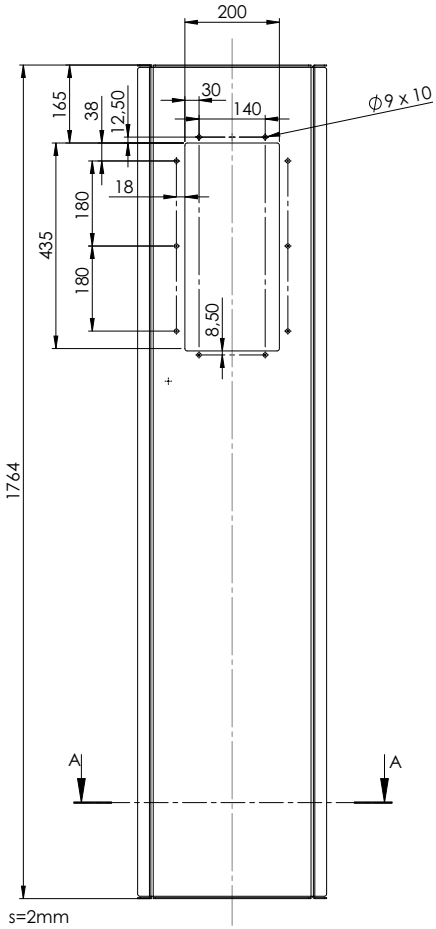

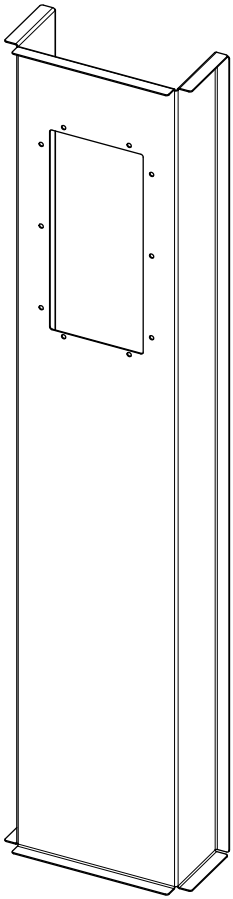

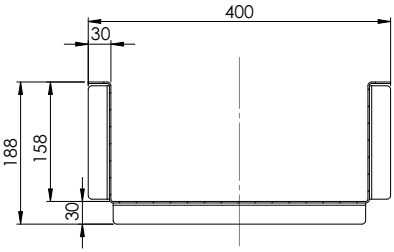

SECTIONA-A SCALE1 : 5

Frame R4

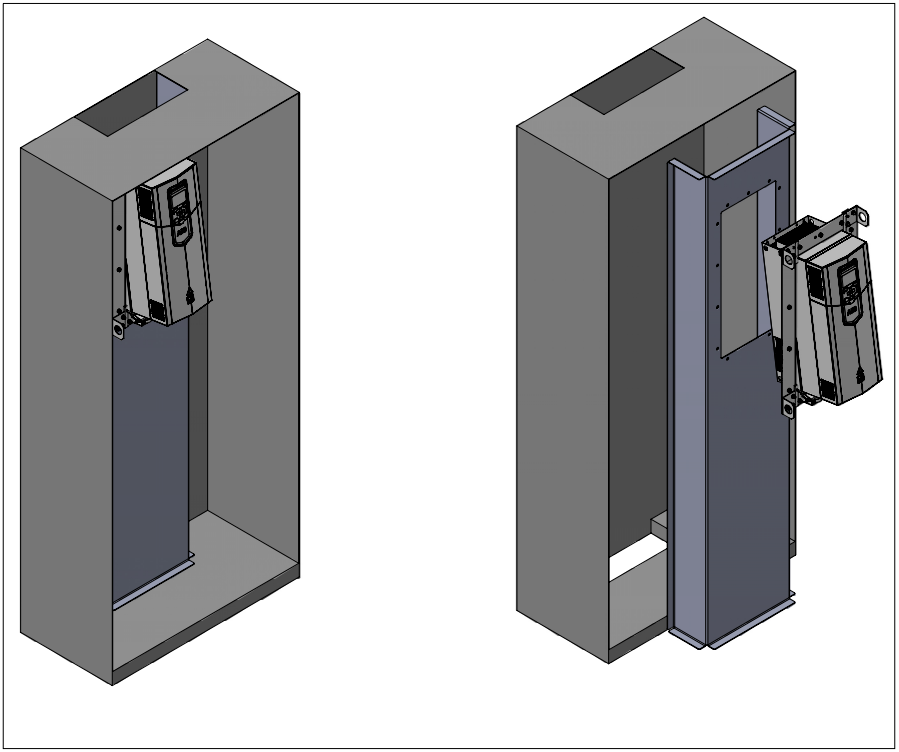

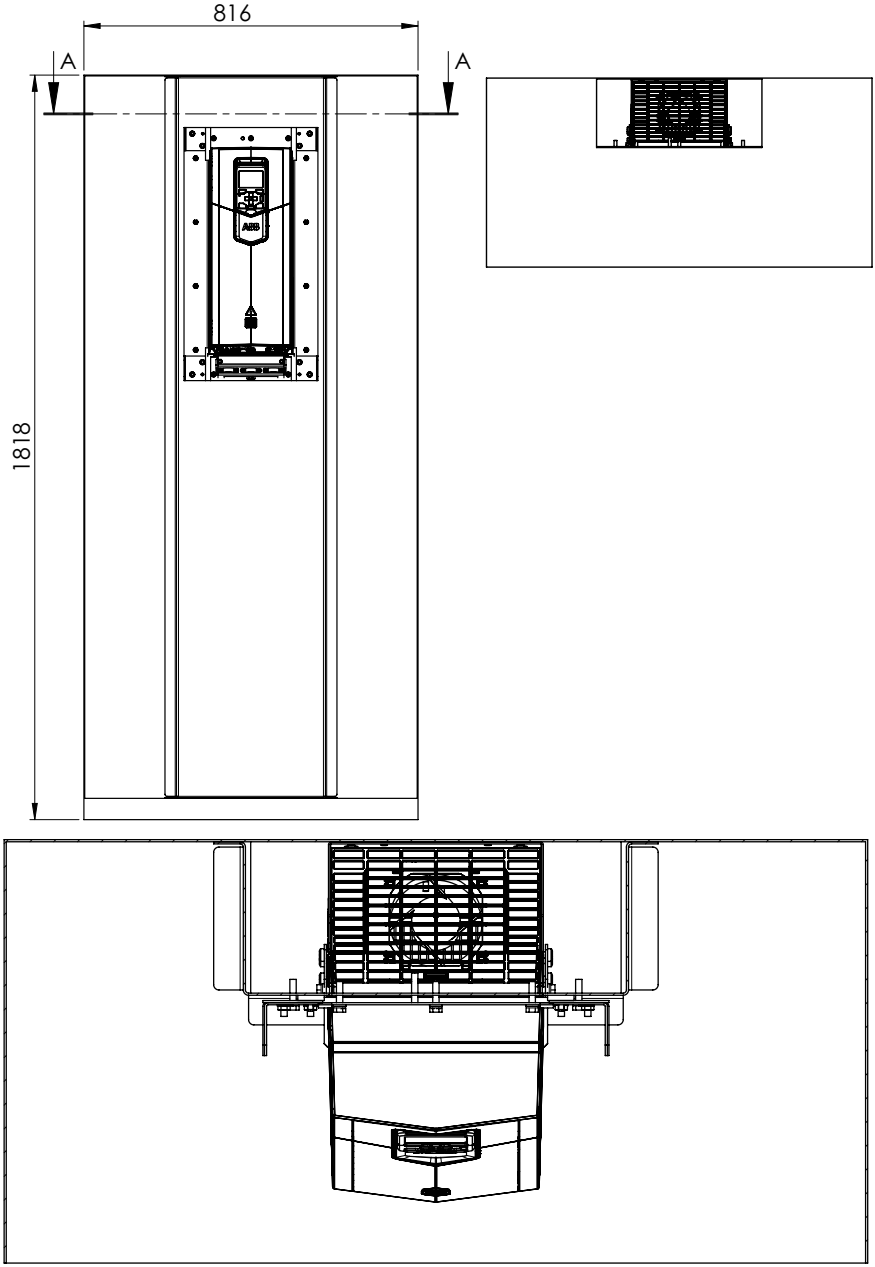

A-A (1 : 5)

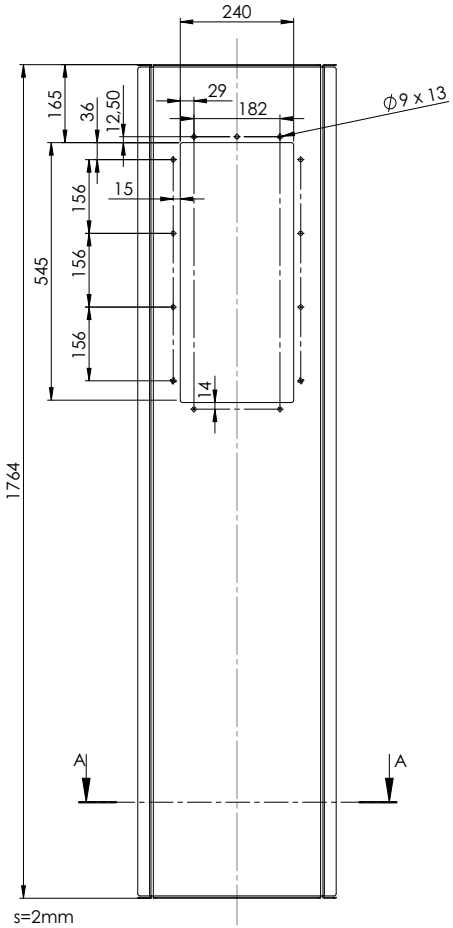

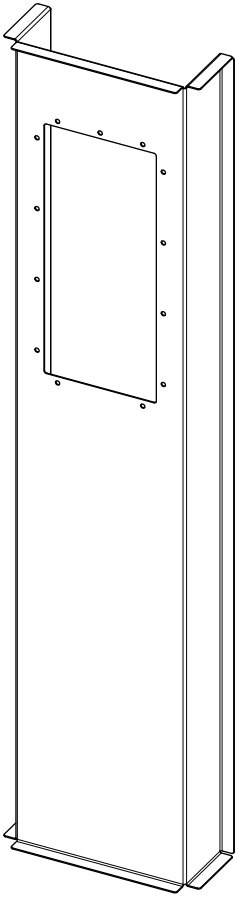

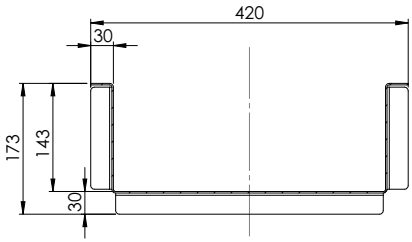

SECTIONA-A SCALE1 : 5

Frame R5

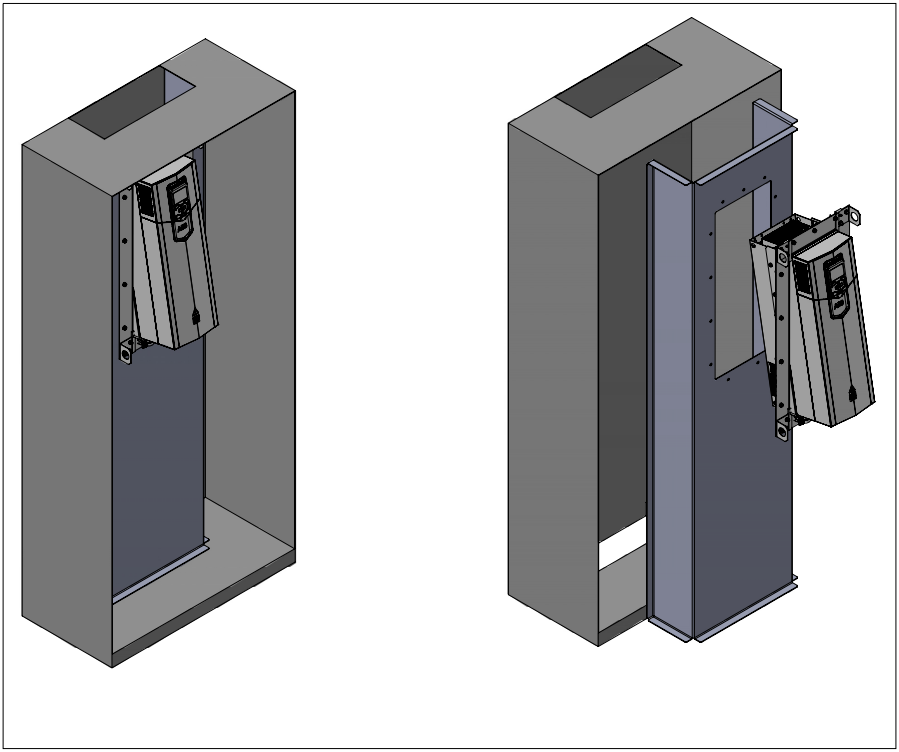

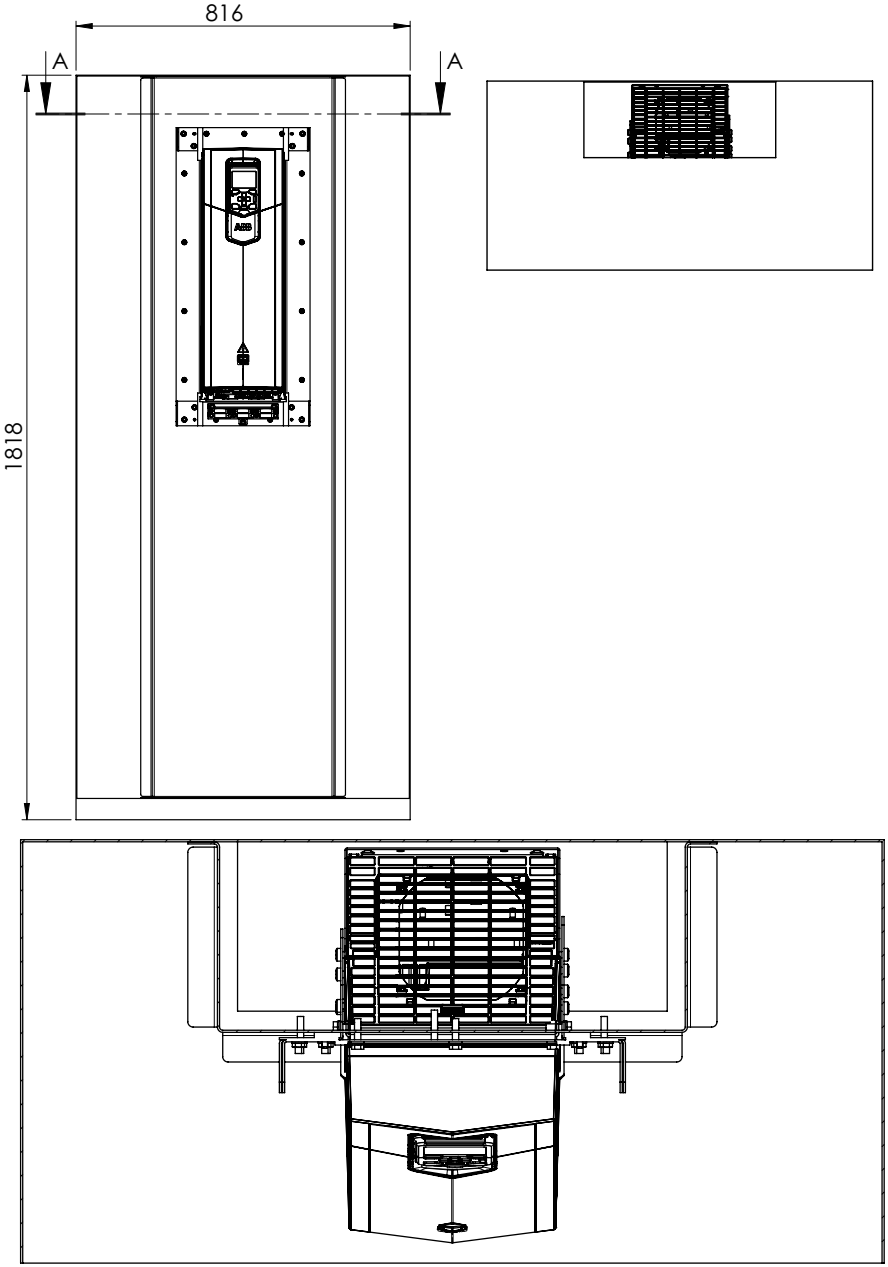

A-A (1 : 5)

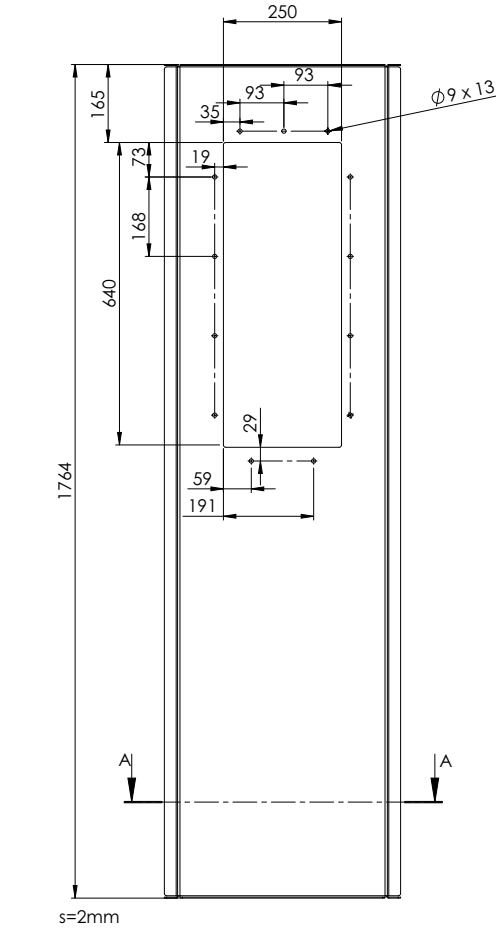

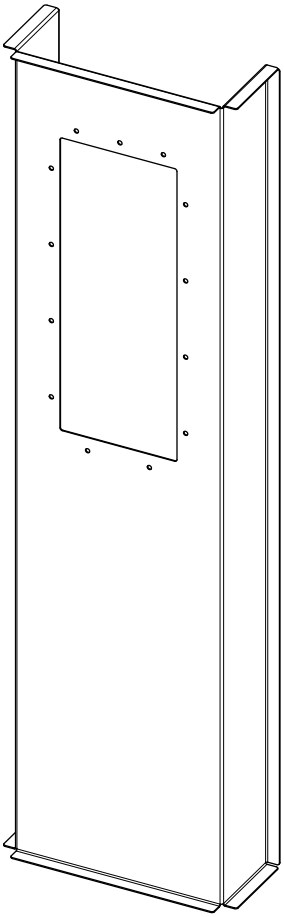

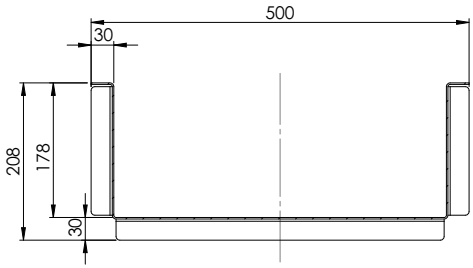

SECTIONA-A SCALE1 : 5

Frame R6

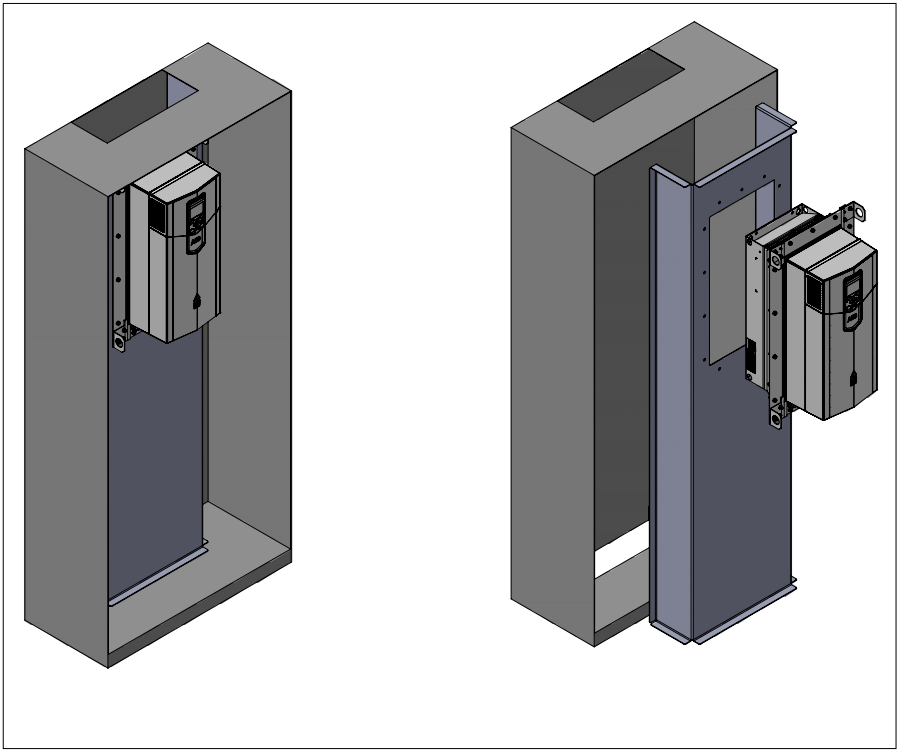

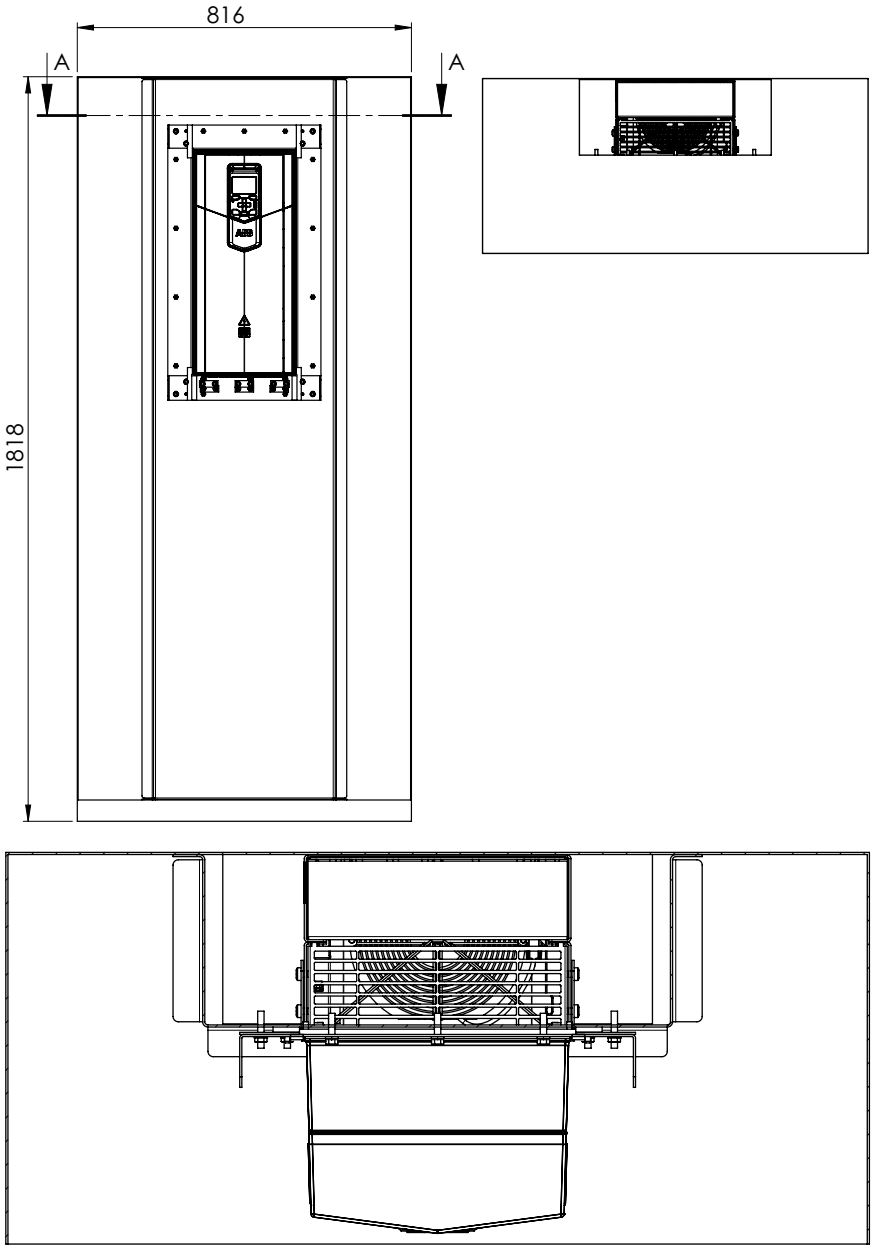

A-A (1 : 5)

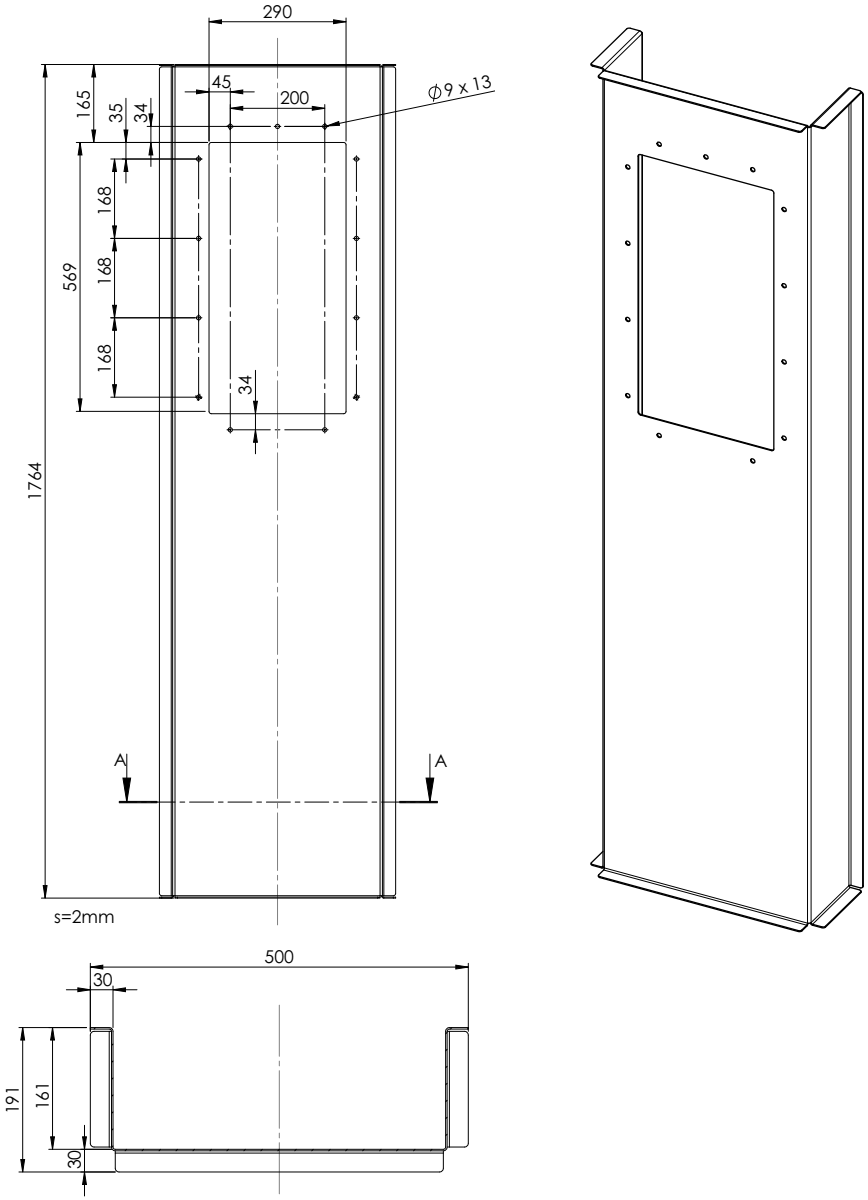
290
45
200
ϕ9 x 13
165
35
34
168
168
168
569
34
1764
A
A
s=2mm
500
30
191
161
30
SECTIONA-A SCALE1 : 5

Frame R7

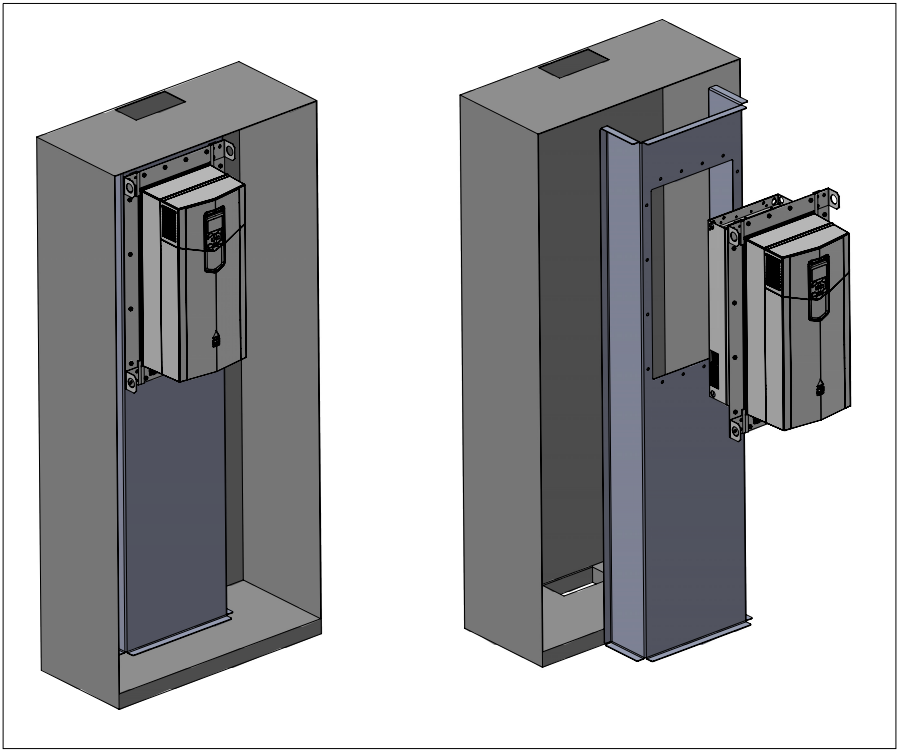

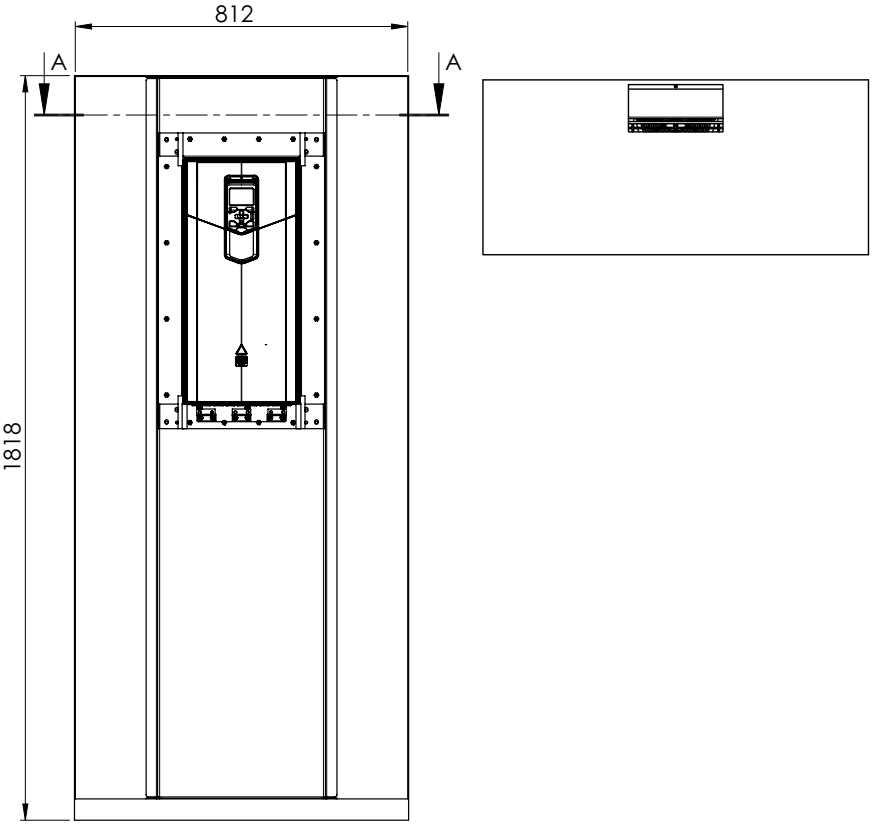

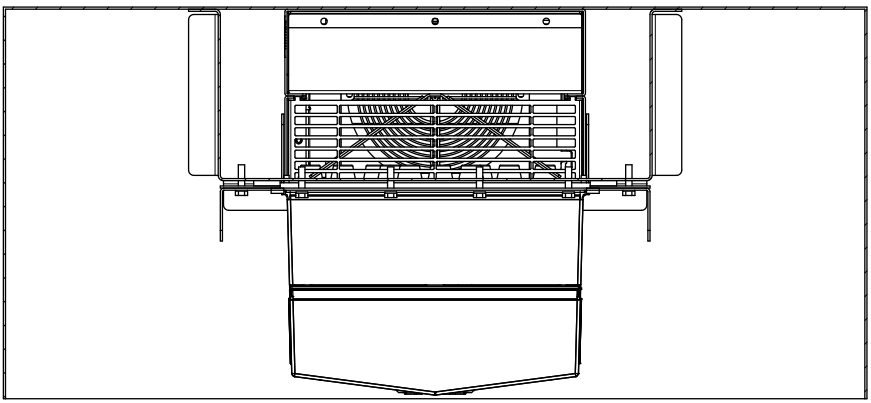

A-A (1 : 5)

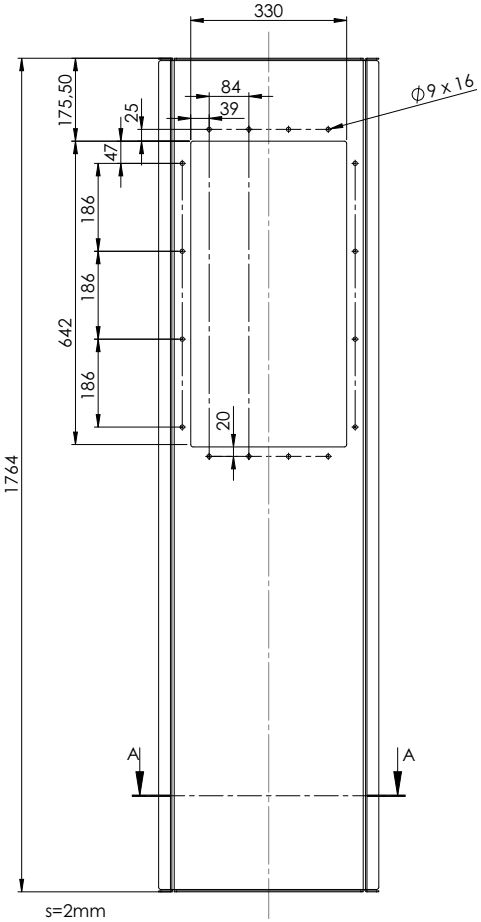

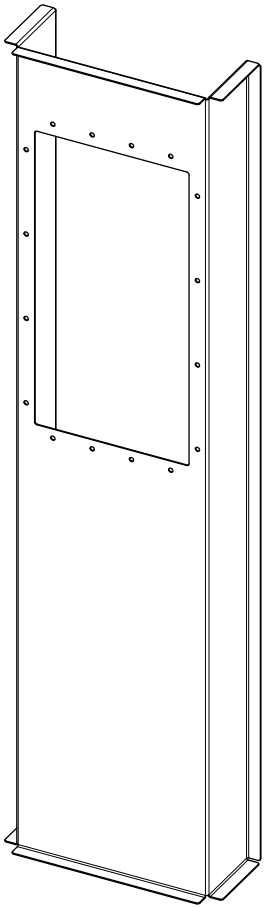

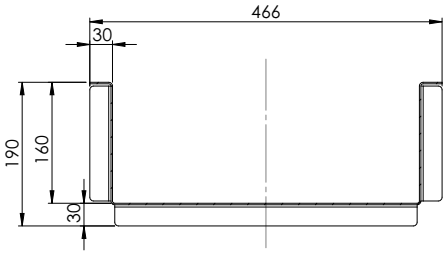

SECTIONA-A SCALE1 : 5

Frame R8

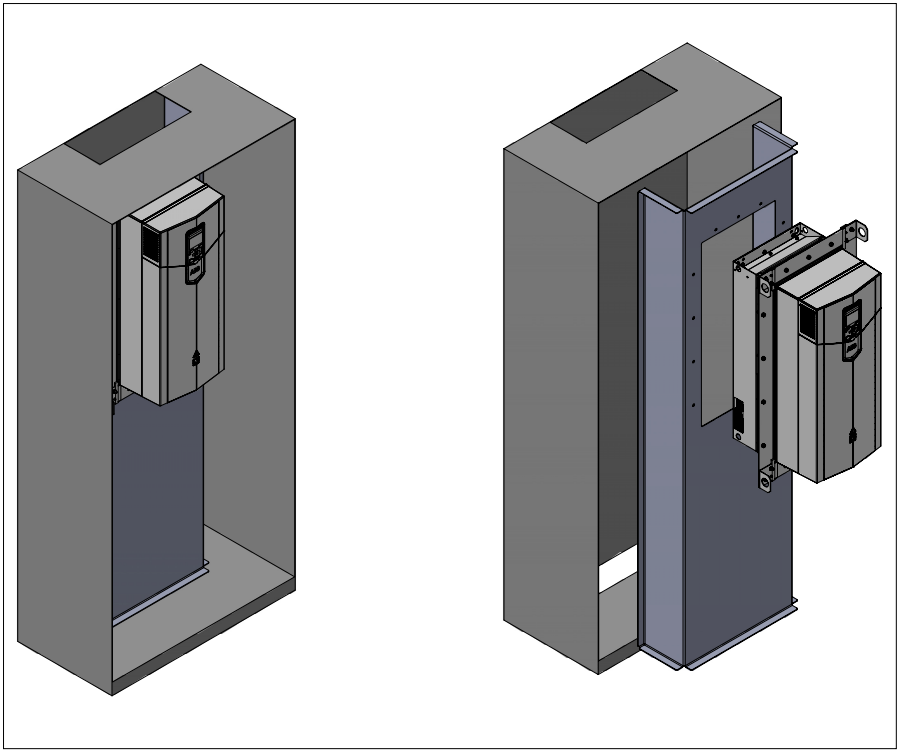

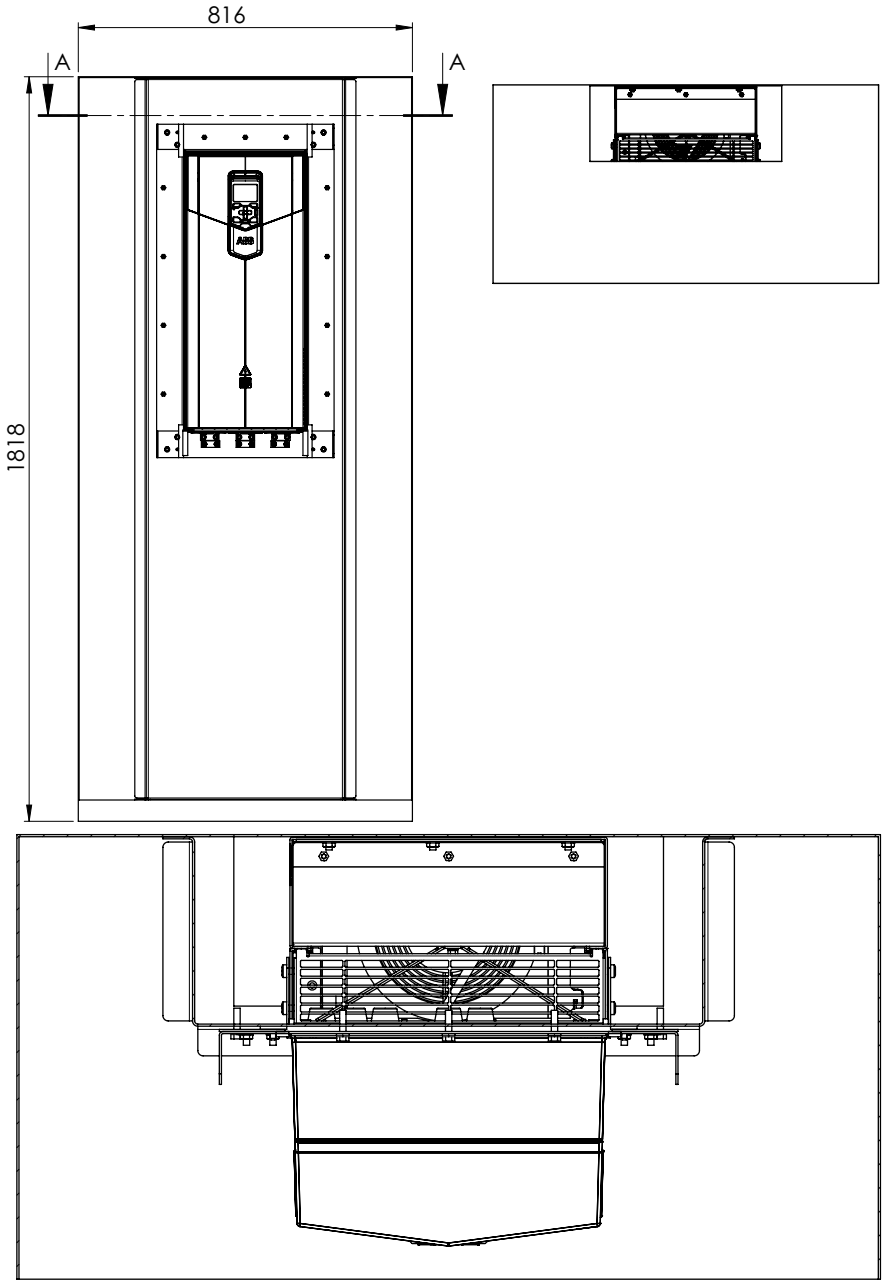
816
A
A
1818
A-A (1 : 5)

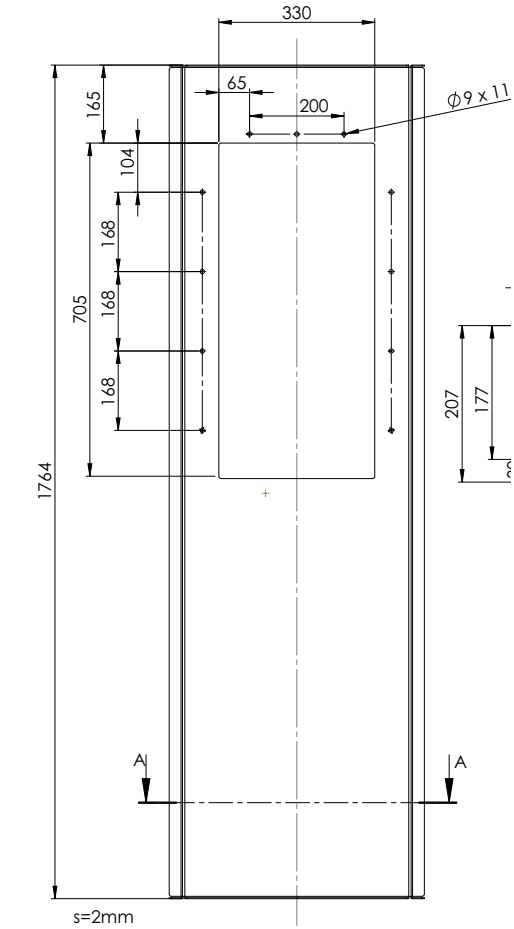

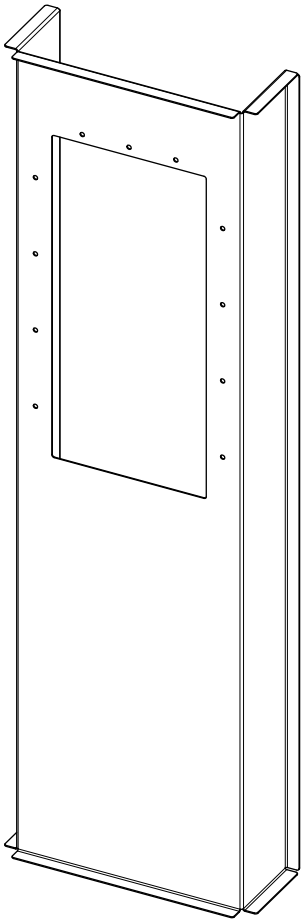

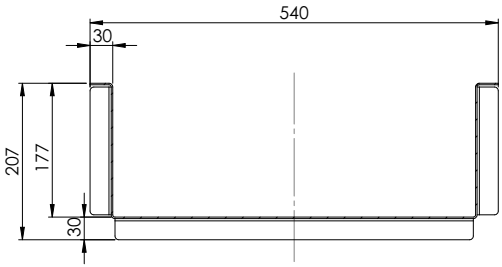

SECTIONA-A SCALE1 : 5

Frame R9

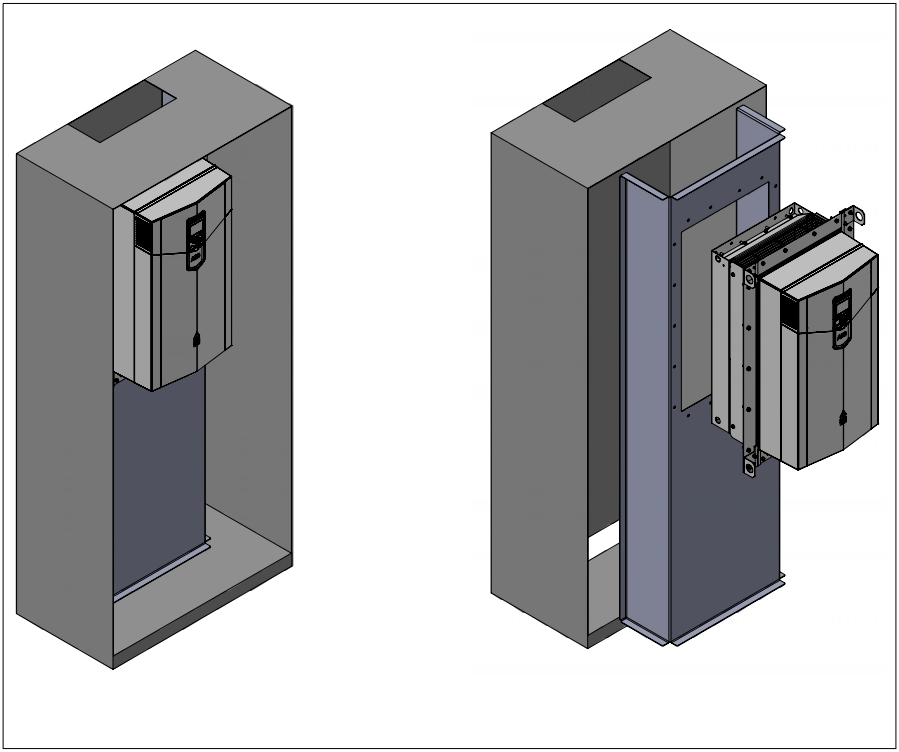

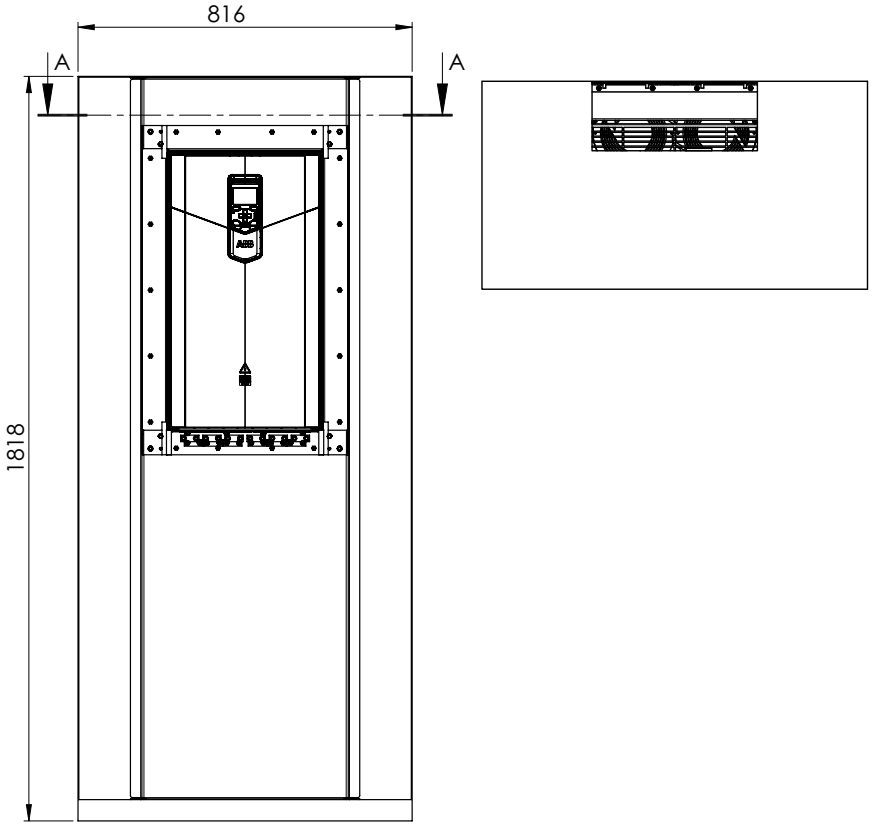

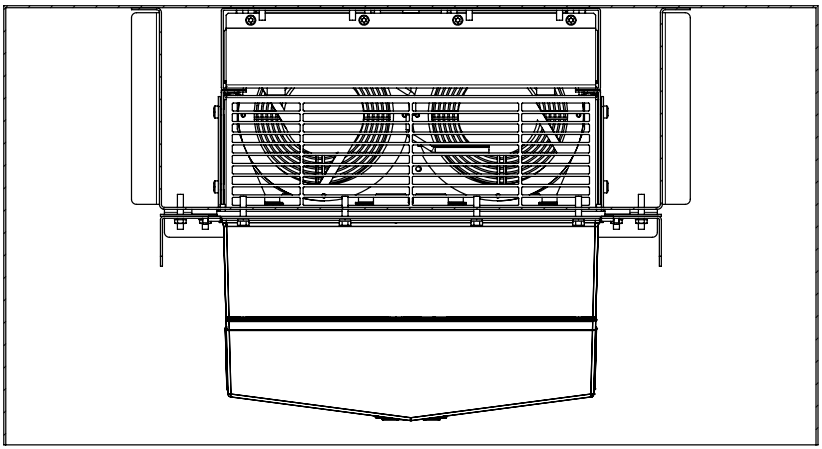

A-A (1 : 5)

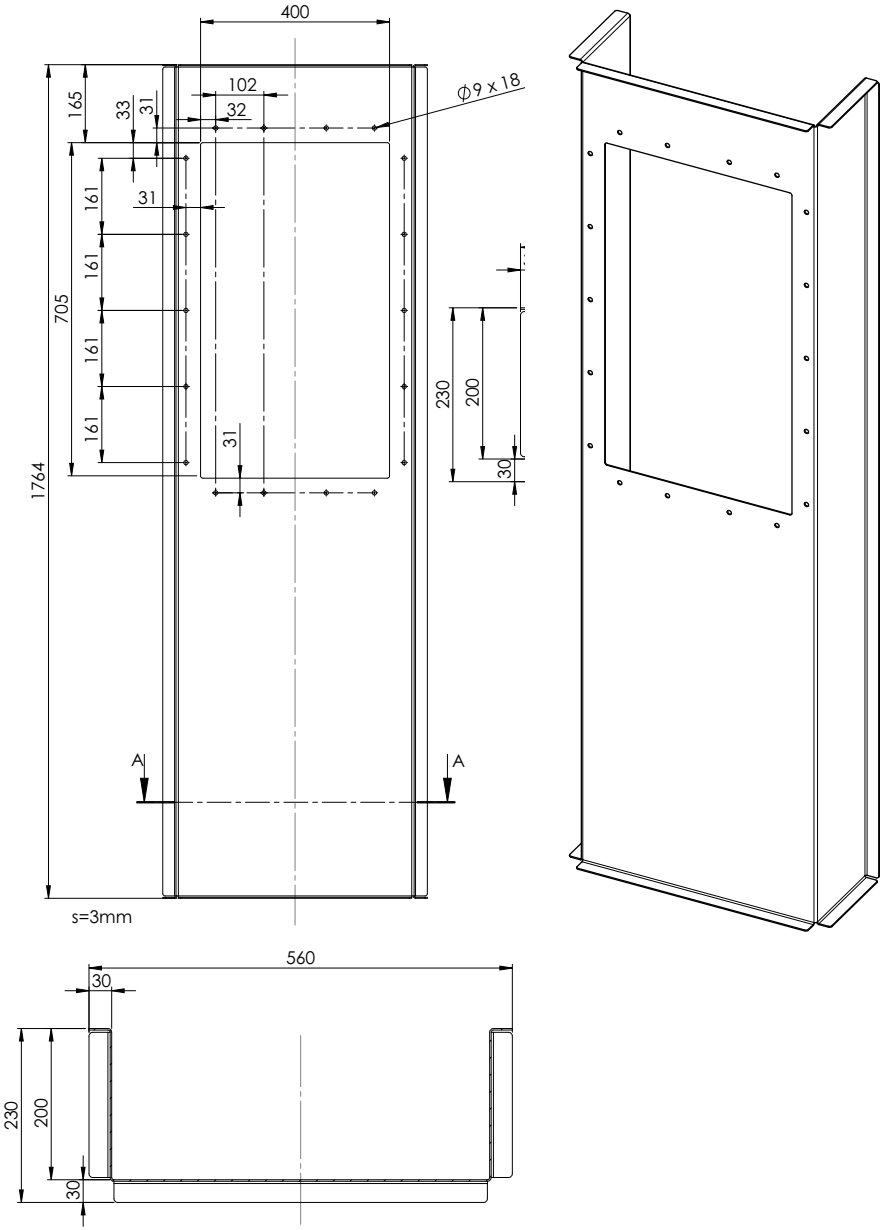
400
102
32
ϕ9 x 18
165
33
31
161
31
705
1764
230
200
30
A
A
s=3mm
560
30
230
200
30
SECTIONA-A SCALE1 : 5

Further information

Product and service inquiries

Address any inquiries about the product to your local ABB representative, quoting the type designation and serial number of the unit in question. A listing of ABB sales, support and service contacts can be found by navigating to www.abb.com/searchchannels.

Product training

For information on ABB product training, navigate to new.abb.com/service/training.

Providing feedback on ABB Drives manuals

Your comments on our manuals are welcome. Navigate to new.abb.com/drives/manuals-feedback-form.

Document library on the Internet

You can find manuals and other product documents in PDF format on the Internet at www.abb.com/drives/documents.

Contact us

www.abb.com/drives
www.abb.com/drivespartners

3AXD50000019100 Rev E (EN) 2018-02-02

Power and productivity
for a better world™