OPTIONS FOR ABB DRIVES

Emergency stop, configurable stop category 0 or 1 (option +Q979) for ACS880 multidrives

User's manual

Emergency stop, configurable stop category 0 or 1 (option +Q979) for ACS880 multidrives

User's manual

Table of contents

1. Safety instructions

4. Electrical installation

7. Start-up and validation test

3AUA0000145933 Rev G
EN
Original instructions
EFFECTIVE: 2022-04-22

Table of contents

1 Safety instructions

Contents of this chapter 9
Use of warnings and notes 9
Instructions for functional safety circuits 10
Electrical safety precautions 11

2 Introduction to the manual

Contents of this chapter 13
Applicability 13
Target audience 13
Exclusion of liability 14
Quick reference guide for taking a safety function into use 14
Related manuals 14
Terms and abbreviations 15

3 Option description

Contents of this chapter 17
Overview 17
Summary of wirings and settings 18
Operation principle 19
Time schemes with a speed estimate (no safety encoder) 20
Emergency stop, stop category 0 20
Emergency stop, stop category 1 with time monitoring 20
Emergency stop, stop category 1 with ramp monitoring 23
Time schemes with a safety encoder 25
Emergency stop, stop category 0 25
Emergency stop, stop category 1 with time monitoring 26
Emergency stop, stop category 1 with ramp monitoring 28
Operation principle diagrams 30
Master-follower configuration between line-ups 31
Fault reaction function 33
Safety relay 33
FSO module 33
Resetting the FSO module 34
FSE-31 module and safety encoder 34
Inverter unit STO function 34
Hardware settings 34

4 Electrical installation

Contents of this chapter 35
Wiring 35

5 Parameter settings

Contents of this chapter 37

Competence 37
FSO module parameter settings 37
General parameters 38
Parameters for the STO function 40
Parameters for the SSE function 42
Parameters for Emergency stop, stop category 0 42
Parameters for Emergency stop, stop category 1 42
Changing the stop category from 0 to 1 45
FSE-31 module and safety pulse encoder related parameters 45
Inverter unit parameter settings 47
Supply unit parameter settings 48

6 Use of the safety function

Contents of this chapter 49
Activating the safety function 49
Resetting the safety function 50

7 Start-up and validation test

Contents of this chapter 51
Validation of the safety functions 51
Competence 51
Validation procedure 51
Validation test reports 52
Start-up and validation test 52

8 Fault tracing

Contents of this chapter 55
Fault tracing 55
Reporting problems and failures related to safety functions 56

9 Maintenance

Contents of this chapter 57
Safety circuit maintenance 57
Proof test interval 57
Functional safety components 58
Competence 58
Residual risk 58
Intentional misuse 58
Decommissioning 59

10 Technical data

Contents of this chapter 61
Safety data 61
Safety performance with different safety pulse encoders 61
Safety data values 61
Safety component types 61
Safety block diagrams 62
Relevant failure modes 62
Fault exclusions 62
Operation delays 62

Ambient conditions 62
Related standards and directives 62
Compliance with the European Machinery Directive 63
Compliance with the Supply of Machinery (Safety) Regulations (UK) 63

Further information

1

Safety instructions

Contents of this chapter

This chapter contains the safety instructions which you must obey when you install, operate and do maintenance on the safety functions of a drive.

Use of warnings and notes

Warnings tell you about conditions which can cause injury or death, or damage to the equipment. They also tell you how to prevent the danger. Notes draw attention to a particular condition or fact, or give information on a subject.

The manual uses these warning symbols:

WARNING!
Electricity warning tells about hazards from electricity which can cause injury or death, or damage to the equipment.

WARNING!
General warning tells about conditions other than those caused by electricity, which can cause injury or death, or damage to the equipment.

WARNING!
Electrostatic sensitive devices warning tells you about the risk of electrostatic discharge which can cause damage to the equipment.

Instructions for functional safety circuits

This manual does not contain the complete safety instructions of the drive. It only includes the instructions related to the scope of this manual.

Only a qualified electrical professional who has sufficient knowledge about functional, machine, and process safety is permitted to install, start up and maintain the safety circuit. All user-made changes are on the user's responsibility.

WARNING!
The safety function described in this manual does not isolate the main or auxiliary circuits from the power supply. Before you do work on the drive, or its main or auxiliary circuits, do the steps in section *Electrical safety precautions (page 11)*.

WARNING!
(With permanent magnet or synchronous reluctance [SynRM] motors only)

In case of a multiple IGBT power semiconductor failure, the drive system can produce an alignment torque which maximally rotates the motor shaft by 180/*p* (with permanent magnet motors) or 180/2*p* (with synchronous reluctance [SynRM] motors) degrees regardless of the activation of the Safe torque off function. *p* denotes the number of pole pairs.

WARNING!
Do the validation test of the safety function at the start-up and also after you make changes to the safety circuit.

WARNING!
Make sure that the functional safety of the machine is maintained in situations where the safety option does not provide protection, for example, during commissioning, system maintenance, fault tracing, or decommissioning.

WARNING!
Obey the safety instructions of the drive. If you ignore them, injury or death, or damage to the equipment can occur. If you are not a qualified electrical professional, do not do installation, commissioning or maintenance work.

Electrical safety precautions

These electrical safety precautions are for all personnel who do work on the drive, motor cable or motor.

WARNING!
Obey these instructions. If you ignore them, injury or death, or damage to the equipment can occur.

If you are not a qualified electrical professional, do not do installation or maintenance work.

Do these steps before you begin any installation or maintenance work.

1. Clearly identify the work location and equipment.
2. Disconnect all possible voltage sources. Make sure that re-connection is not possible. Lock out and tag out.
   - Open the main disconnecting device of the drive.
   - Open the charging switch if present.
   - Open the disconnector of the supply transformer. (The main disconnecting device in the drive cabinet does not disconnect the voltage from the AC input power busbars of the drive cabinet.)
   - If the drive is equipped with a DC/DC converter unit (optional) or a DC feeder unit (optional): Open the DC switch-disconnector ([Q11], option +F286 or +F290) of the unit. Open the disconnecting device of the energy storage connected to the unit (outside the drive cabinet).
   - Open the auxiliary voltage switch-disconnector (if present), and all other possible disconnecting devices that isolate the drive from dangerous voltage sources.
   - In the liquid cooling unit (if present), open the switch-disconnector of the cooling pumps.
   - If you have a permanent magnet motor connected to the drive, disconnect the motor from the drive with a safety switch or by other means.
   - Disconnect all dangerous external voltages from the control circuits.
   - After you disconnect power from the drive, always wait 5 minutes to let the intermediate circuit capacitors discharge before you continue.
3. Protect any other energized parts in the work location against contact.
4. Take special precautions when close to bare conductors.
5. Measure that the installation is de-energized. Use a quality voltage tester. If the measurement requires removal or disassembly of shrouding or other cabinet structures, obey the local laws and regulations applicable to live working (including – but not limited to – electric shock and arc protection).
   - Before and after measuring the installation, verify the operation of the voltage tester on a known voltage source.
   - Make sure that the voltage between the drive input power terminals (L1, L2, L3) and the grounding (PE) busbar is zero.
   - Make sure that the voltage between the drive output terminals (T1/U, T2/V, T3/W) and the grounding (PE) busbar is zero.

Important! Repeat the measurement also with the DC voltage setting of the tester. Measure between each phase and ground. There is a risk of dangerous DC voltage charging due to leakage capacitances of the motor circuit. This voltage can remain charged for a long time after the drive power-off. The measurement discharges the voltage.

- Make sure that the voltage between the drive DC terminals (UDC+ and UDC-) and the grounding (PE) terminal is zero. In cabinet-built drives, measure between the drive DC busbars (+ and -) and the grounding (PE) busbar.

WARNING!
The busbars inside the cabinet of liquid-cooled drives are partially coated. Measurements made through the coating are potentially unreliable, so only measure at uncoated portions. Note that the coating does not constitute a safe or touch-proof insulation.

6. Install temporary grounding as required by the local regulations.
7. Ask for a permit to work from the person in control of the electrical installation work.

2

Introduction to the manual

Contents of this chapter

This chapter describes the manual in short and gives some general information for the reader. This chapter also contains a quick reference guide for implementing a safety system.

Applicability

This manual is applicable to ACS880 air-cooled and liquid-cooled multidrives which have the option +Q979: Emergency stop, configurable stop category 0 or 1 with STO, with FSO.

Required versions with the FSO-12 module:

- ACS880 primary control program: 1.80 or later
- FSO-12 safety functions module: revision C or later
- Drive Composer pro: 1.6 or later.

Required versions with the FSO-21 module:

- ACS880 primary control program: 2.2 or later
- FSO-21 safety functions module: revision D or later
- FSE-31 pulse encoder interface module: revision D or later (if used)
- Drive Composer pro: 1.8 or later.

This manual shows the default design of the safety circuit ordered with option code +Q979. The actual design can be different from the default design because of customer-defined modifications. Always refer to the documentation delivered with the drive.

Target audience

This manual is intended for people who install, commission, use and service the safety function. Read the manual before working on the unit. You are expected to know the

fundamentals of electricity, wiring, electrical components, electrical schematic symbols, and functional safety.

Exclusion of liability

ABB is not responsible for the implementation, verification and validation of the overall safety system. It is the responsibility of the system integrator (or other party) who is responsible for the overall system and system safety.

The system integrator (or other responsible party) must make sure that the entire implementation complies with the instructions in this manual, all relevant standards, directives and local electrical code, and that the system is tested, verified and validated correctly.

Quick reference guide for taking a safety function into use

Task	☑
Connect the user-defined wiring (if any). Refer to the wiring instructions in this manual and the circuit diagrams delivered with the drive.	☐
Check and/or set the safety function related parameters (as listed in this manual).	☐
Do the validation test to make sure that the implemented system meets the safety requirements. You can find the instructions for the validation test in this manual and in the FSO module user's manual.	☐
Document the validation test procedure. You can find the guidelines for the validation test report in this manual and in the FSO module user's manual.	☐

Related manuals

Manual	**Code**
Drive hardware	
ACS880 multidrive cabinets mechanical installation instructions	3AUA0000101764
ACS880 liquid-cooled multidrive cabinets mechanical installation instructions	3AXD50000048635
ACS880 multidrive cabinets and modules electrical planning instructions	3AUA0000102324
ACS880 liquid-cooled multidrive cabinets and modules electrical planning	3AXD50000048634
Supply units	
ACS880-207 IGBT supply units hardware manual	3AUA0000130644
ACS880-207LC IGBT supply units hardware manual	3AXD50000174782
ACS880-307…+A003 diode supply units hardware manual	3AUA0000102453
ACS880-307…+A018 diode supply units hardware manual	3AXD50000011408
ACS880-307LC…+A018 diode supply units hardware manual	3AXD50000579662
ACS880-907 regenerative rectifier units hardware manual	3AXD50000020546
Inverter hardware	
ACS880-107 inverter units hardware manual	3AUA0000102519
ACS880-107LC inverter units hardware manual	3AXD50000196111
Drive firmware	
ACS880 primary control program firmware manual	3AUA0000085967
ACS880 primary control program quick start-up guide	3AUA0000098062
ACS880 diode supply control program firmware manual	3AUA0000103295
ACS880 IGBT supply control program firmware manual	3AUA0000131562

Manual	Code
ACS880 regenerative rectifier control program firmware manual	3AXD50000020827
PC tools	
Drive Composer start-up and maintenance PC tool user's manual	3AUA0000094606
Functional safety design tool user’s manual	3AXD10000102417
Safety	
ACS880 multidrive cabinets and modules safety instructions	3AUA0000102301
ACS880 liquid-cooled multidrive cabinets and modules safety instructions	3AXD50000048633
Functional safety; Technical guide No. 10	3AUA0000048753
ABB Safety information and solutions	www.abb.com/safety
Options	
ACX-AP-x assistant control panels user’s manual	3AUA0000085685
Other documents	
Circuit diagrams	Delivered with the drive
Part lists	Delivered with the drive
Safety data report (if ordered with option code +P947)	

You can find manuals and other product documents in PDF format on the Internet at www.abb.com/drives/documents.

Terms and abbreviations

Term	Description
Cat.	Classification of the safety-related parts of a control system in respect of their resistance to faults and their subsequent behavior in the fault condition, and which is achieved by the structural arrangement of the parts, fault detection and/or by their reliability. The categories are: B, 1, 2, 3 and 4. (EN ISO 13849-1)
Control unit	The part in which the control program runs.
DIIL	Digital input interlock
E-stop	Emergency stop
FSE-31	Optional pulse encoder interface module for safety encoder
FSO-21	Safety functions module which supports the FSE-31 module and the use of safety encoders
FSO-12	Safety functions module which does not support the use of encoders
HFT	Hardware fault tolerance (IEC 61508)
IGBT	Insulated gate bipolar transistor
Inverter unit	Inverter module(s) under control of one control unit, and related components. One inverter unit typically controls one motor.
Mission time	The period of time covering the intended use of the safety function/device. After the mission time elapses, the safety device must be replaced. Note that any mission time values given cannot be regarded as a guarantee or warranty. (EN ISO 13849-1)
modoff	No modulation
NC	Normally closed
PL	Performance level. Levels a...e correspond to SIL (EN ISO 13849-1)
POUS	Prevention of unexpected start-up
SAR	Safe acceleration range
SIL	Safety integrity level (1…3) (IEC 61508, IEC 62061, IEC 61800-5-2)
SS1	Safe stop 1 (IEC/EN 61800-5-2)
SSE	Safe stop emergency

Term	Description
STO	Safe torque off (IEC/EN 61800-5-2)
Stop category	There are three categories of stop functions defined by IEC/EN 60204-1: • stop category 0: an uncontrolled stop where power to the machine actuators is removed immediately (for example, STO) • stop category 1: a controlled stop where the machine actuators have power for stopping, after which the power is removed (SS1) • stop category 2: a controlled stop where the machine actuators continue to have power (SS2).
Supply unit	Supply module(s) under control of one control unit, and related components.
TP	Test pulse
Validation	Confirmation by, for example, analysis that the safety system meets the functional safety requirements of the specific application.
Verification	Confirmation by, for example, testing that the safety system meets the requirements set by the specification.

3

Option description

Contents of this chapter

This chapter describes the operation and settings of the option +Q979: Emergency stop, configurable stop category 0 or 1 with STO, with FSO.

Overview

Option +Q979 uses the FSO-12 safety functions module (option +Q973) or the FSO-21 safety functions module (option +Q972) for the emergency stop safety function. In this emergency stop option, the inverter unit STO function is activated. The main contactor/breaker of the drive is not opened.

ABB installs the FSO modules, and the emergency stop circuit to the drive. ABB sets default parameter values for the option at the factory. The user adjusts the operation of the emergency stop function with the safety parameters at the start-up, for example, sets the stop category (0 or 1). ABB sets stop category 0 at the factory.

If option +L521 is selected, ABB installs the FSO-21 safety functions module and FSE-31 pulse encoder interface module to the inverter units. With this option, you can use safety encoders in the application.

Note: The FSO-12 module is not compatible with the FSE-31 module or safety encoders.

Option +Q979 supports these emergency stop functions:

- Emergency stop, stop category 0
  This is an uncontrolled stop (IEC/EN 60204-1). When the user pushes the emergency stop button, the Safe torque off (STO) function of the FSO module is activated. This activates the inverter unit STO function. The motors coast to a stop.
- Emergency stop, stop category 1
  This is a controlled stop (IEC/EN 60204-1). When the user pushes the emergency stop button, the Safe stop 1 function (SS1) of the FSO module is activated. After the inverter

units decelerate the motor speed to a user-defined zero speed limit, the FSO module activates the inverter unit STO function.

The SS1 function can operate in time monitoring or in ramp monitoring mode. In time monitoring mode, the FSO module monitors that a user-defined deceleration time limit is not exceeded. In ramp monitoring mode, the FSO module monitors that the motor decelerates along a user-defined stop ramp.

Note: The safety function request to the FSO module must be active for a minimum of 20 ms.

To start the inverter units, the user must release the emergency stop button and then push the emergency stop reset button for 0.3 … 3 s. This resets the emergency stop circuit and deactivates the inverter unit STO.

For a detailed description of the inverter unit Safe torque off function, refer to the applicable hardware manual. For more information on the safety functions of the FSO module, see *FSO-12 safety functions module user's manual* (3AXD50000015612 [English]) or *FSO-21 safety functions module user's manual* (3AXD50000015614 [English]). For more information on the FSE-31 module, see *FSE-31 pulse encoder interface module user's manual* (3AXD50000016597 [English]).

The design principles of the option +Q979 comply with EN ISO 13850.

The STO and SS1 functions comply with IEC/EN 61800-5-2. For a complete list of related standards and European directives, refer to section *Related standards and directives (page 62)*.

Summary of wirings and settings

The wirings and settings of the emergency stop function are:

- The inverter units are equipped with FSO safety functions modules (option +Q973 or +Q972). ABB installs the modules at the factory.
- The supply unit is equipped with an emergency stop safety relay. ABB installs the safety relay at the factory.
- The emergency stop safety relay is connected to the FSO modules in the inverter units. ABB connects the safety relay to the FSO modules at the factory.
- If option +G331 is selected, one emergency stop button is installed on the cabinet door and connected to the safety relay. ABB connects the button at the factory. The user can add buttons to the emergency stop circuit.
- One emergency stop reset button is installed on the cabinet door and connected to the safety relay. The reset button also includes an emergency stop indication lamp. ABB connects the button and the indication lamp at the factory. The user can add reset buttons to the reset circuit.

Emergency stop, stop category 0:

- The digital inputs of the FSO module to which the emergency stop button is connected, are selected as the inputs for the STO request. This is an FSO module parameter that ABB sets at the factory by default and the user must check at the start-up.

Emergency stop, stop category 1:

The user must set these FSO module parameters at start-up:

- The digital inputs of the FSO module to which the emergency stop button is connected, are selected as the inputs for the SS1 request.
- The SS1 function is set to use either the time monitoring or ramp monitoring mode.
- The stop ramp that is used to decelerate the motor(s) and the monitoring limits (stop ramp time or ramp monitoring limits) are set according to the application requirements.

Additional requirements when safety encoders are used:

- The inverter units are equipped with a FSO-21 safety functions module and FSE-31 pulse encoder interface module. If option +L521 is selected, ABB installs the modules at the factory.
- The motors must be equipped with safety encoders. The user installs and connects the safety encoders to the FSE-31 modules. The user must make sure that the required safety integrity (SIL/PL) can be achieved with the used safety encoders.

Operation principle

The operation and configuration of the emergency stop function is slightly different with and without a safety encoder. Only the FSO-21 module supports the safety encoder interface, and you can also use it without a safety encoder.

Note: The Emergency stop, stop category 1 function uses the SS1 function of the FSO module. The SS1 function uses SAR1 parameters to define the stop ramp. In some situations (for example, in internal fault situations or due to another safety function) the FSO module can activate the Safe stop emergency (SSE) function. The SSE function uses SAR0 parameters to define the stop ramp.

Note: If the FSO module activates the SSE function while the SS1 function is active, the SSE function overrides the SS1 function. Therefore, SAR0 parameters are used instead of SAR1 parameters to define the stop ramp. You must take this into account when you use the SS1 function to implement an emergency stop (stop category 1).

Time schemes with a speed estimate (no safety encoder)

Emergency stop, stop category 0

This time scheme diagram illustrates the operation of the Emergency stop, stop category 0 safety function. This option uses the Safe torque off (STO) function of the FSO module.

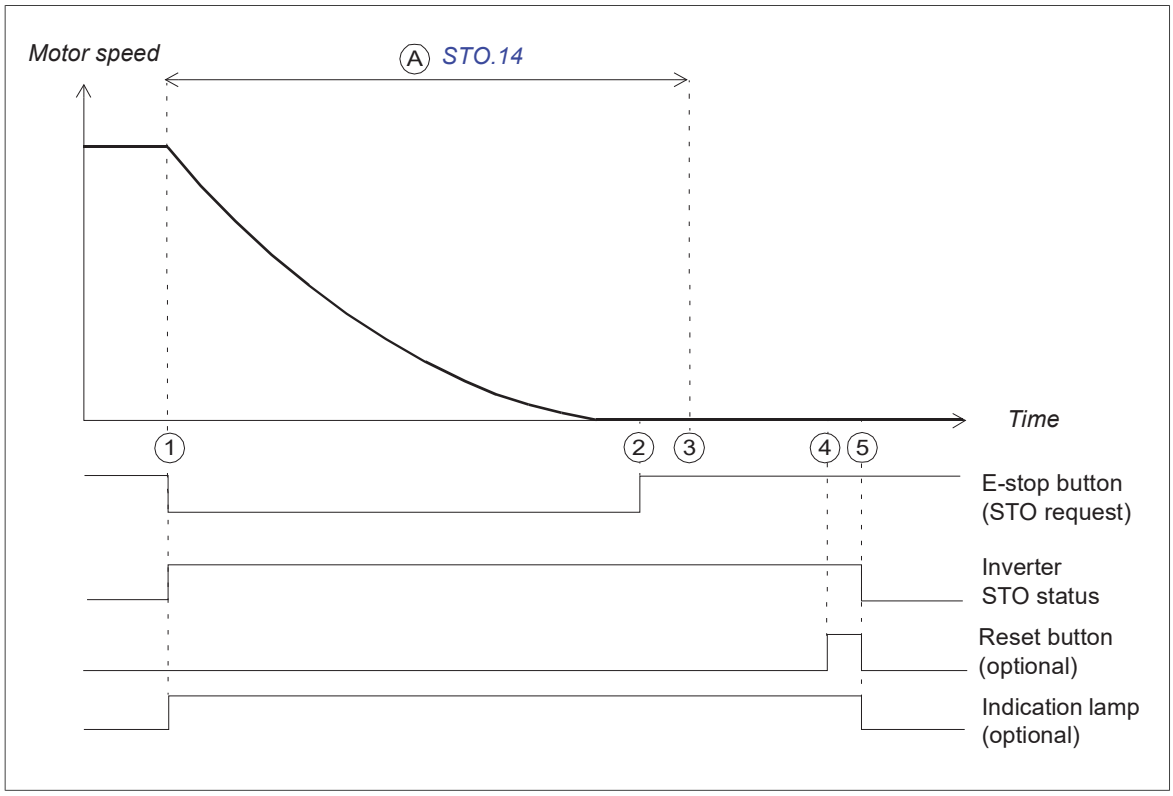

A Time to zero speed: Time from the activation of the STO function to the moment when the STO function is completed and the acknowledgement of the STO function is possible. The user must set this time longer than the time the motor coasts from the maximum speed to zero speed (parameter *STO.14 Time to zero speed with STO and modoff*).

1. The user pushes the emergency stop button. The FSO module activates the FSO and inverter unit STO functions. The FSO module starts counters for time A. The emergency stop indication lamp comes on.
2. The user releases the emergency stop button. ABB recommends that you do not release the emergency stop button before the motor has stopped.
3. Time A has elapsed. The motor has stopped and the acknowledgement of the STO function is possible.
4. The user pushes the reset button (this resets the emergency stop circuit and acknowledges the STO function).
5. The FSO module deactivates the STO function in the inverter unit. The emergency stop indication lamp goes off. The inverter unit is ready for a restart.

Emergency stop, stop category 1 with time monitoring

This time scheme diagram illustrates the operation of the Emergency stop, stop category 1 safety function with time monitoring. This option uses the Safe stop 1 (SS1) function of the FSO module.

Case A: The motor speed reaches the zero speed limit within the user-defined time

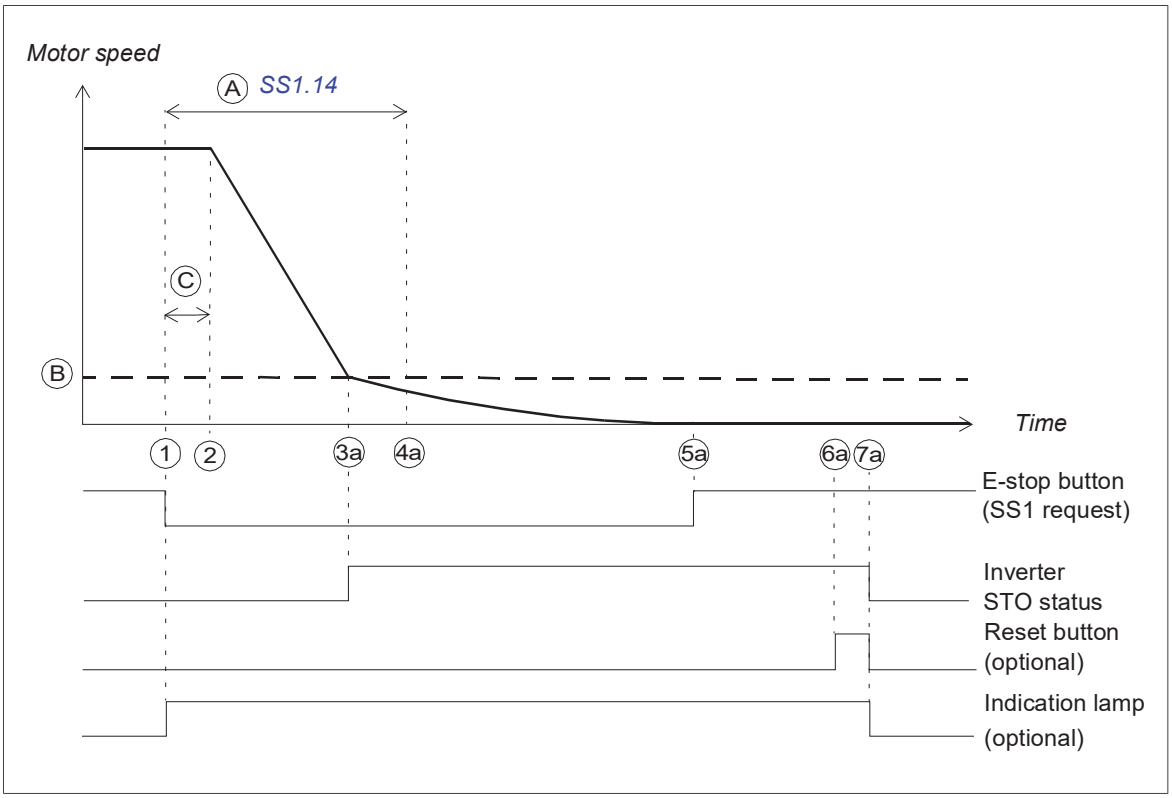

A	SS1-t monitoring time: When time A has elapsed, the FSO module activates the STO function.
B	Zero speed limit: Speed limit for activating the inverter unit STO function. This is a user-defined value (parameter *FSOGEN.51 Zero speed without encoder*).
C	Safety function response time.

1. The user pushes the emergency stop button (this activates the SS1 function of the FSO module). The FSO module starts a timer for delay A. The emergency stop indication lamp comes on.
2. The inverter unit starts to decelerate the motors along the user-defined stop ramp (SAR1 parameter *200.112 SAR1 ramp time to zero*).
3. a) The motor speed goes below the zero speed limit (B). The FSO module activates the inverter unit STO function. The emergency stop indication lamp comes on.

   Note: You can set an additional delay for the STO activation (parameter *SS1.15 SS1-r ramp zero speed delay for STO*).
4. a) Time A has elapsed. The STO function is already active. In this case, this time has no effect.
5. a) The user releases the emergency stop button. ABB recommends that you do not release the emergency stop button before the motor has stopped.
6. a) The user pushes the reset button (this resets the emergency stop circuit and acknowledges the STO function).
7. a) The FSO module deactivates the STO function in the inverter units. The emergency stop indication lamp goes off. The inverter units are ready for a restart.

Case B: The motor speed does not reach the zero speed limit within the user-defined time

Time A has elapsed from the emergency stop command (step 1) but the motor speed still exceeds the zero speed limit.

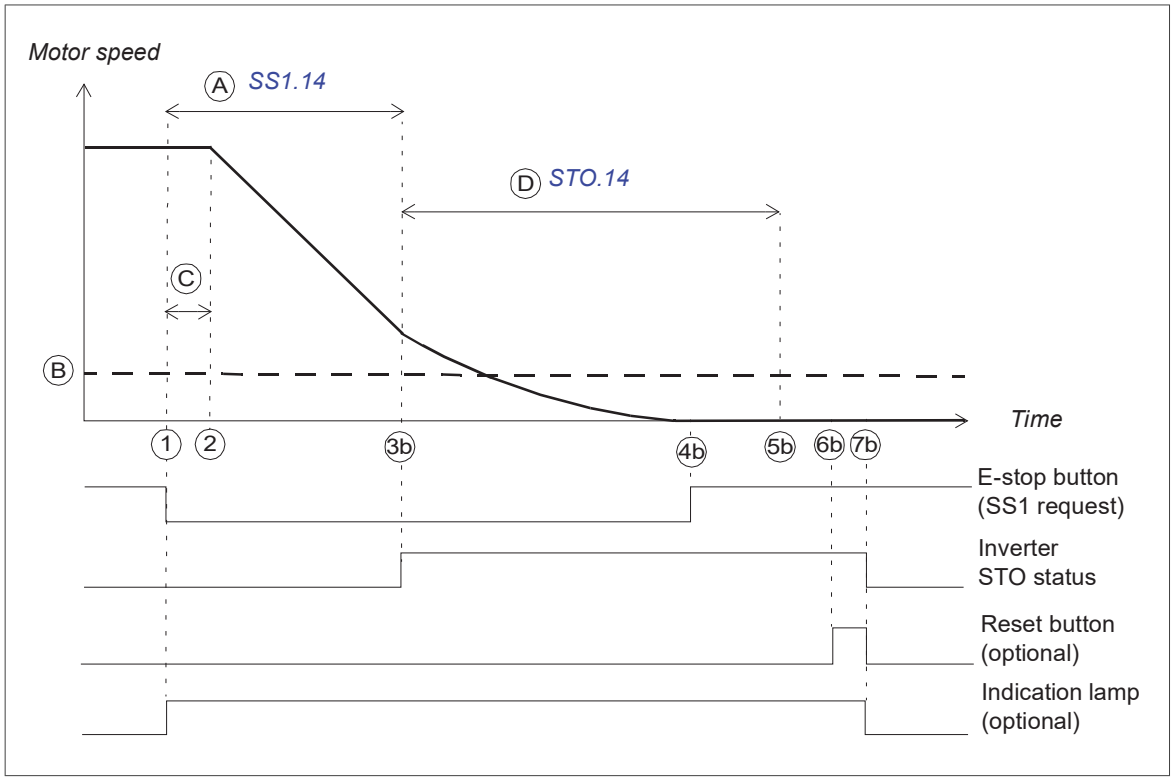

A	SS1-t monitoring time: When time A has elapsed from the start of the counter (step 1), the FSO module activates FSO and the inverter unit STO functions (case B). In case A, the FSO module has already activated the STO function. This is a user-defined value (parameter *SS1.14 SS1-t delay for STO*).
B	Zero speed limit: Speed limit for activating the inverter unit STO function. This is a user-defined value (parameter *FSOGEN.51 Zero speed without encoder*).
C	Safety function response time.
D	Time to zero speed: When time D has elapsed from the start of the counter (step 3b, activation of the STO function) the acknowledgement of the STO function is possible. The user must set this time longer than the time the motor coasts from the maximum speed to zero speed (parameter *STO.14 Time to zero speed with STO and modoff*).

1. The user pushes the emergency stop button (this activates the SS1 function of the FSO module). The FSO module starts a timer for delay A. The emergency stop indication lamp comes on.
2. The inverter unit starts to decelerate the motors along the user-defined stop ramp (SAR1 parameter *200.112 SAR1 ramp time to zero*).
3. b) The FSO module activates the FSO and inverter unit STO functions (case B) and starts a counter for time D. The motors coast to a stop.
4. b) The user releases the emergency stop button. ABB recommends that you do not release the emergency stop button before the motor has stopped.
5. b) Time D has elapsed. The motor has stopped. Acknowledgement of the STO function is possible.

6. b) The user pushes the reset button (this resets the emergency stop circuit and acknowledges the STO function).
7. b) The FSO module deactivates the STO function in the inverter units. The emergency stop indication lamp goes off. If the FSO module is configured to generate a fault after a limit hit (parameter *FSOGEN.62*), the user must reset the inverter units before they are ready for a restart.

Emergency stop, stop category 1 with ramp monitoring

This time scheme diagram illustrates the operation of the Emergency stop, stop category 1 safety function with ramp monitoring. This option uses the Safe stop 1 (SS1) function of the FSO module.

Case A: The motor speed reaches the zero speed limit within the user-defined stop ramp monitoring window

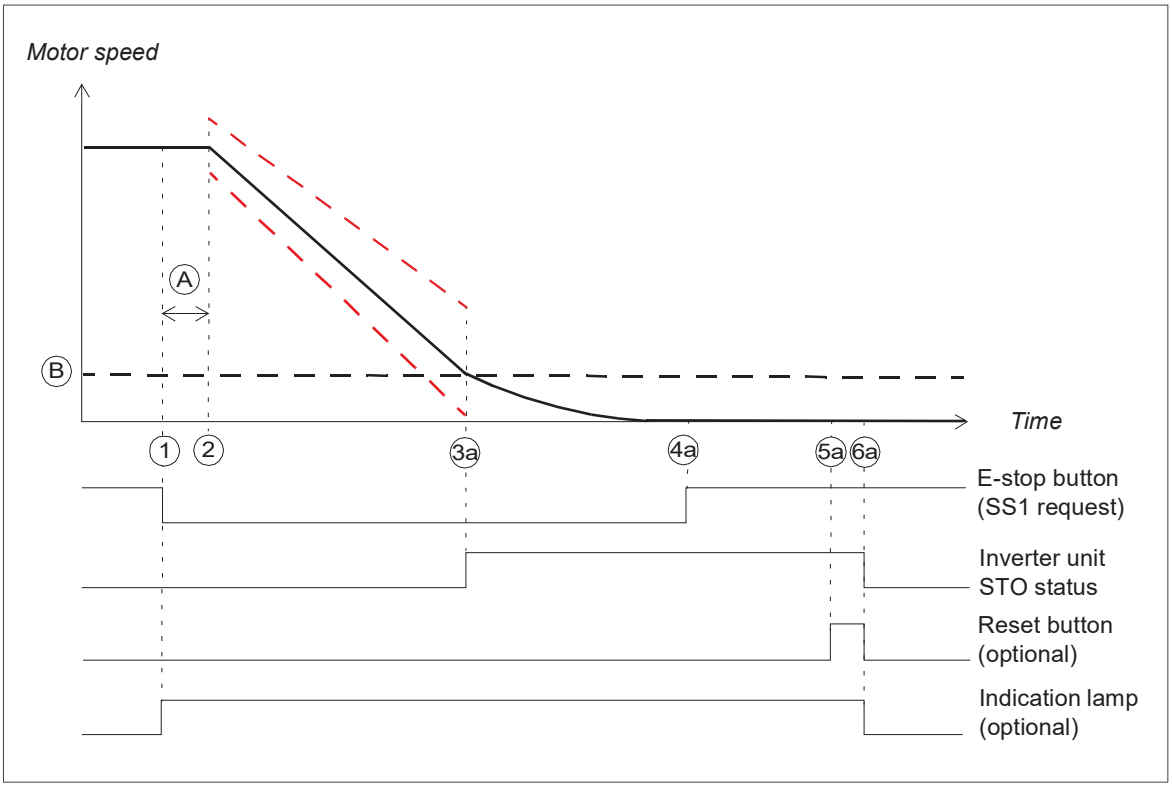

A	Safety function response time.
B	Zero speed limit: Speed limit for activating the inverter unit STO function. This is a user-defined value (parameter *FSOGEN.51 Zero speed without encoder*).

1. The user pushes the emergency stop button (this activates the SS1 function of the FSO module). The emergency stop indication lamp comes on.
2. The inverter units start to decelerate the motors along the user-defined stop ramp. The FSO module starts the ramp monitoring (SAR1 parameters *200.112*, *SARx.21*, *SARx.22* and *SARx.02*).
3. a) The motor speed reaches the zero speed limit. The FSO module activates the inverter units' STO function and stops the ramp monitoring.

   Note: You can set an additional delay for the STO activation (parameter *SS1.15 SS1-r ramp zero speed delay for STO*).

4. a) The user releases the emergency stop button. ABB recommends that you do not release the emergency stop button before the motor has stopped.
5. a) The user pushes the reset button (this resets the emergency stop circuit and acknowledges the STO function).
6. a) The FSO module deactivates the STO function in the inverter units (automatic acknowledgement). The emergency stop indication lamp goes off. The inverter units are ready for a restart.

Case B: The motor speed does not follow the user-defined stop ramp monitoring window

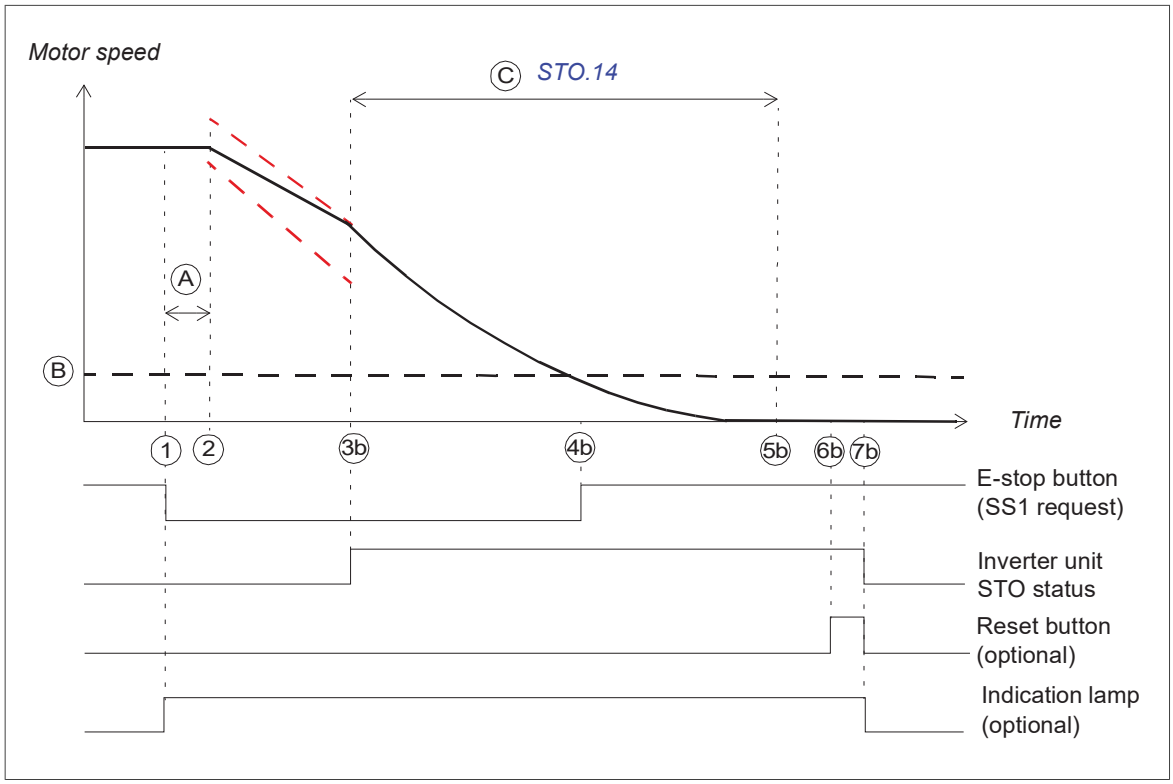

A	Safety function response time.
B	Zero speed limit: Speed limit for activating the drive STO function. This is a user-defined value (parameter *FSOGEN.51 Zero speed without encoder*).
C	Time to zero speed: When time C has elapsed from the start of the counter (step 3b, activation of the STO function), the acknowledgement of the STO function is possible. The user must set this time longer than the time the motor coasts from the maximum speed to zero speed (parameter *STO.14 Time to zero speed with STO and modoff*).

1. The user pushes the emergency stop button (this activates the SS1 function of the FSO module). The emergency stop indication lamp comes on.
2. The inverter units start to decelerate the motors along the user-defined stop ramp. The FSO module starts the ramp monitoring (SAR1 parameters *200.112*, *SARx.21*, *SARx.22* and *SARx.02*).
3. b) The FSO module activates the FSO and inverter units' STO functions and stops the ramp monitoring. The FSO module starts a counter for (C). The motors coast to a stop.
4. b) The user releases the emergency stop button. ABB recommends that you do not release the emergency stop button before the motor has stopped.

5. b) Time C has elapsed. The motor has stopped. Acknowledgement of the STO function is possible.
6. b) The user pushes the reset button (this resets the emergency stop circuit and acknowledges the STO function).
7. b) The FSO module deactivates the STO function in the inverter units (automatic acknowledgement). The emergency stop indication lamp goes off. If the FSO module is configured to generate a fault after a limit hit (parameter *FSOGEN.62*), the user must reset the inverter units before they are ready for a restart.

Time schemes with a safety encoder

Emergency stop, stop category 0

This time scheme diagram illustrates the operation of the Emergency stop, stop category 0 safety function when a safety encoder is used. This option uses the Safe torque off (STO) function of the FSO-21 module.

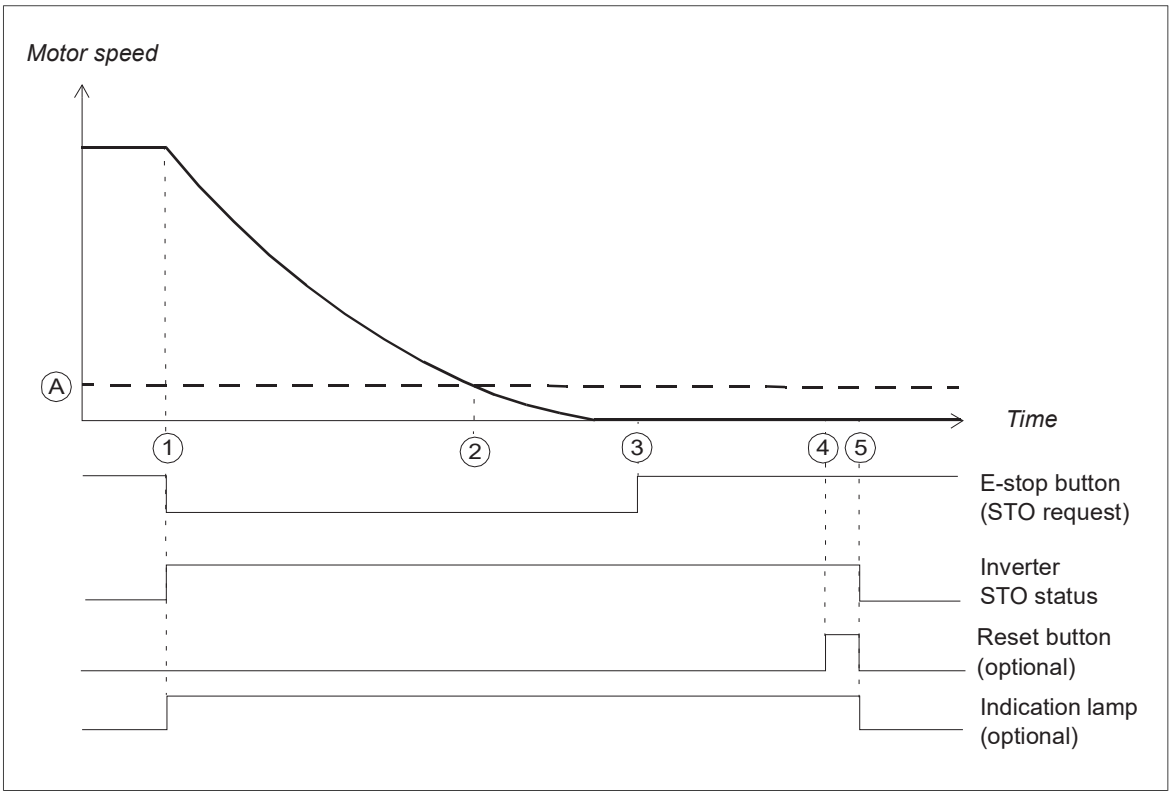

A Zero speed with encoder: Speed limit at which the motor has stopped and the safety function is completed (parameter *FSOGEN.52 Zero speed with encoder*).

1. The user pushes the emergency stop button and the FSO module activates the FSO and inverter unit STO functions. The emergency stop indication lamp comes on.
2. The motor speed goes below the zero speed limit (A). The motor has stopped and the acknowledgement of the STO function is possible.
3. The user releases the emergency stop button. ABB recommends that you do not release the emergency stop button before the motor has stopped.

4. The user pushes the reset button (this resets the emergency stop circuit and acknowledges the STO function).
5. The FSO module deactivates the STO function in the inverter units. The emergency stop indication lamp goes off. The inverter units are ready for a restart.

Emergency stop, stop category 1 with time monitoring

This time scheme diagram illustrates the operation of the Emergency stop, stop category 1 safety function with time monitoring when a safety encoder is used. This option uses the Safe stop 1 (SS1) function of the FSO-21 module.

Case A: The motor speed reaches the zero speed limit within the user-defined time

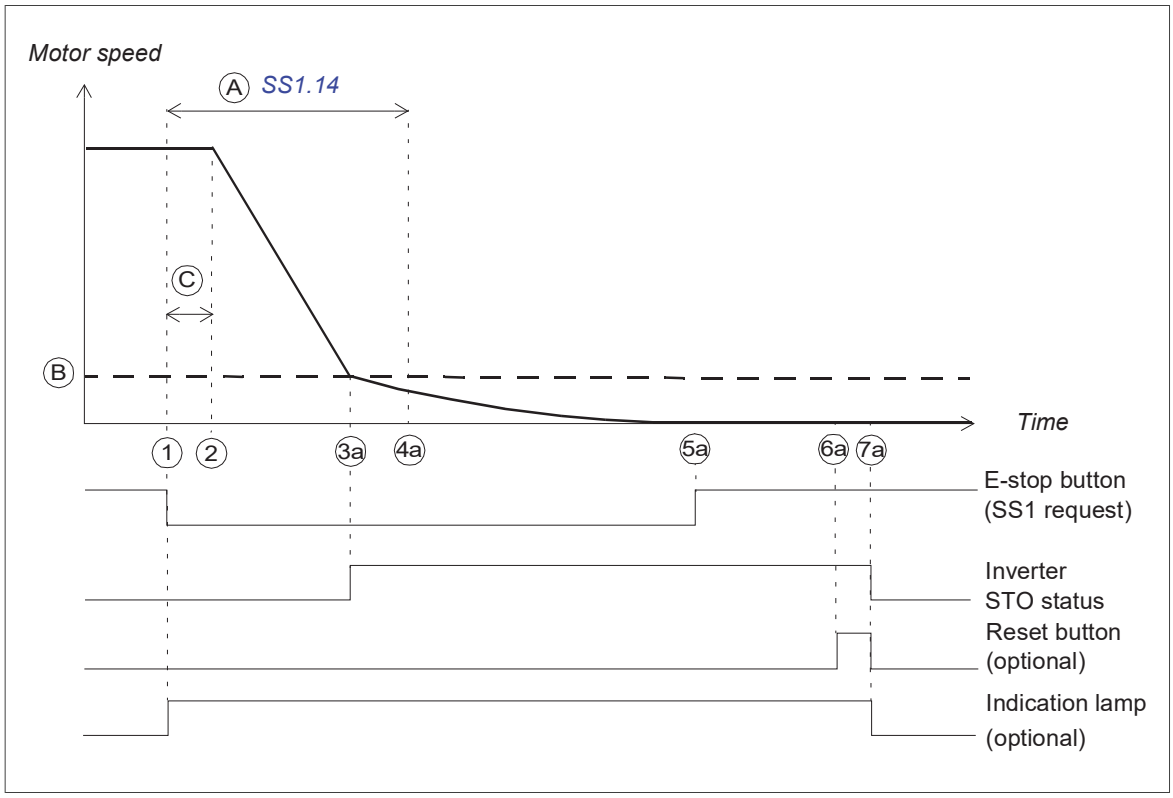

A	SS1-t monitoring time: When time A has elapsed from the start of the timer (step 1), the FSO module activates FSO and inverter unit STO functions (case B). In case A, the FSO module has already activated the STO function. This is a user-defined value (parameter *SS1.14 SS1-t delay for STO*).
B	Zero speed limit: Speed limit for activating the inverter unit STO function. This is a user-defined value (parameter *FSOGEN.52 Zero speed with encoder*).
C	Safety function response time.

1. The user pushes the emergency stop button (this activates the SS1 function of the FSO module). The FSO module starts a timer for delay A. The emergency stop indication lamp comes on.
2. The inverter unit starts to decelerate the motors along the user-defined stop ramp (SAR1 parameter *200.112 SAR1 ramp time to zero*).
3. a) The motor speed goes below the zero speed limit (B). The FSO module activates the inverter unit STO function.

   Note: You can set an additional delay for the STO activation (parameter *SS1.15 SS1-r ramp zero speed delay for STO*).

4. a) Time A has elapsed. The STO function is already active. In this case, this time has no effect.
5. a) The user releases the emergency stop button. ABB recommends that you do not release the emergency stop button before the motor has stopped.
6. a) The user pushes the reset button (this resets the emergency stop circuit and acknowledges the STO function).
7. a) The FSO module deactivates the STO function in the inverter units (automatic acknowledgement). The emergency stop indication lamp goes off. The inverter units are ready for a restart.

Case B: The motor speed does not reach the zero speed limit within the user-defined time

Time A has elapsed from the emergency stop command (step 1) but the motor speed still exceeds the zero speed limit.

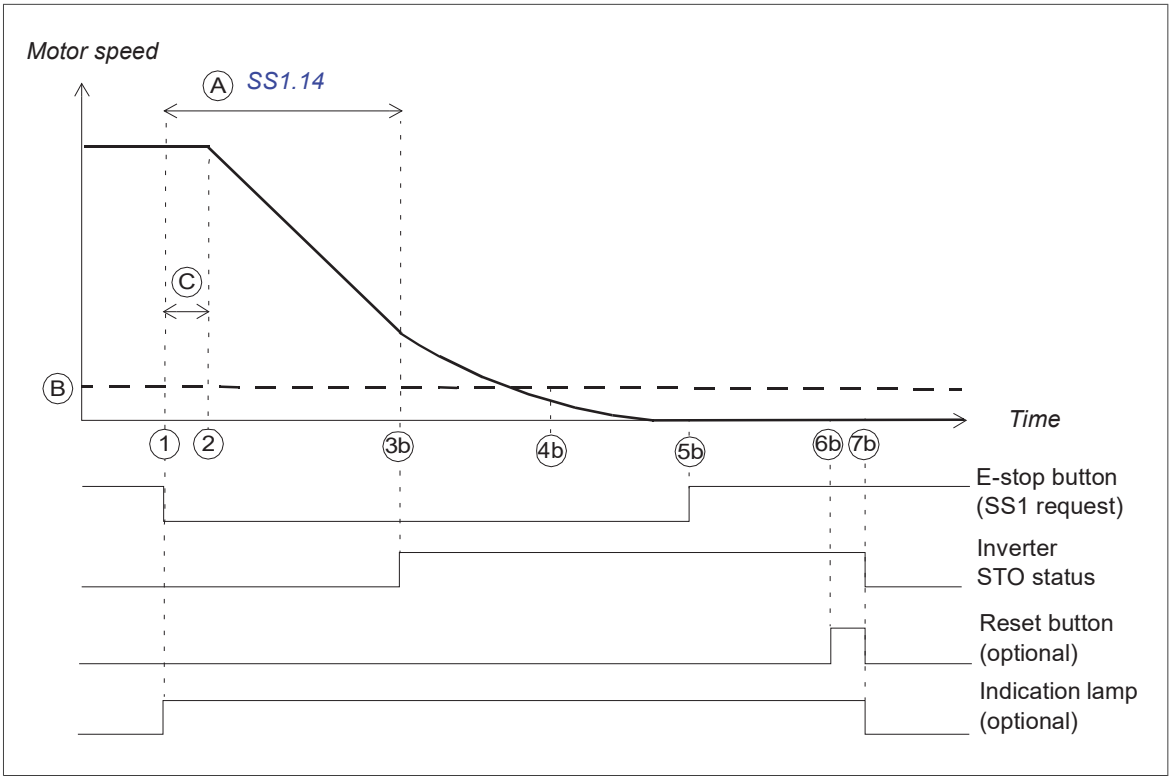

A	SS1-t monitoring time: When time A has elapsed from the start of the timer (step 1), the FSO module activates FSO and inverter unit STO functions (case B). In case A, the FSO module has already activated the STO function. This is a user-defined value (parameter *SS1.14 SS1-t delay for STO*).
B	Zero speed limit: Speed limit for activating the inverter unit STO function. This is a user-defined value (parameter *FSOGEN.52 Zero speed with encoder*).
C	Safety function response time.

1. The user pushes the emergency stop button (this activates the SS1 function of the FSO module). The FSO module starts a timer for delay A. The emergency stop indication lamp comes on.
2. The inverter unit starts to decelerate the motors along the user-defined stop ramp (SAR1 parameter *200.112 SAR1 ramp time to zero*).

3. b) The FSO module activates the FSO and inverter unit STO functions. The motors coast to a stop.
4. b) The motor speed reaches the zero speed limit (B). The motor has stopped. Acknowledgement of the STO function is possible.
5. b) The user releases the emergency stop button. ABB recommends that you do not release the emergency stop button before the motor has stopped.
6. b) The user pushes the reset button (this resets the emergency stop circuit and acknowledges the STO function).
7. b) The FSO module deactivates the STO function in the inverter units (automatic acknowledgement). The emergency stop indication lamp goes off. If the FSO module is configured to generate a fault after a limit hit (parameter *FSOGEN.62*), the user must reset the inverter units before they are ready for a restart.

Emergency stop, stop category 1 with ramp monitoring

This time scheme diagram illustrates the operation of the Emergency stop, stop category 1 safety function with ramp monitoring when a safety encoder is used. This option uses the Safe stop 1 (SS1) function of the FSO-21 module.

Case A: The motor speed reaches the zero speed limit within the user-defined stop ramp monitoring window

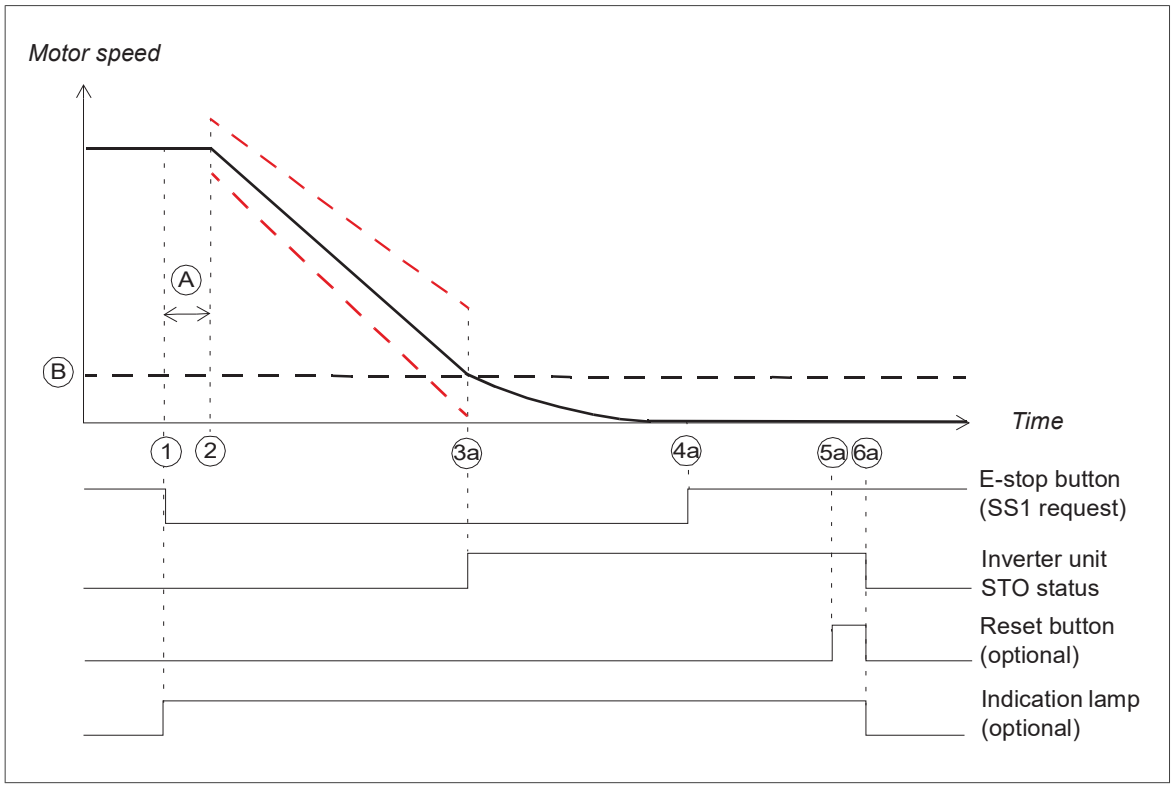

A Safety function response time.

B Zero speed limit: Speed limit for activating the STO function. This is a user-defined value (parameter *FSOGEN.52 Zero speed with encoder*).

1. The user pushes the emergency stop button (this activates the SS1 function of the FSO module). The emergency stop indication lamp comes on.
2. The inverter units start to decelerate the motors along the user-defined stop ramp. The FSO module starts the ramp monitoring (SAR1 parameters *200.112*, *SARx.21*, *SARx.22* and *SARx.02*).
3. a) The motor speed reaches the zero speed limit (B). The FSO module activates the inverter units' STO function and stops the ramp monitoring.

   Note: You can set an additional delay for the STO activation (parameter *SS1.15 SS1-r ramp zero speed delay for STO*).
4. a) The user releases the emergency stop button. ABB recommends that you do not release the emergency stop button before the motor has stopped.
5. a) The user pushes the reset button (this resets the emergency stop circuit and acknowledges the STO function).
6. a) The FSO module deactivates the STO function in the inverter units (automatic acknowledgement). The emergency stop indication lamp goes off. The inverter units are ready for a restart.

Case B: The motor speed does not follow the user-defined stop ramp monitoring window

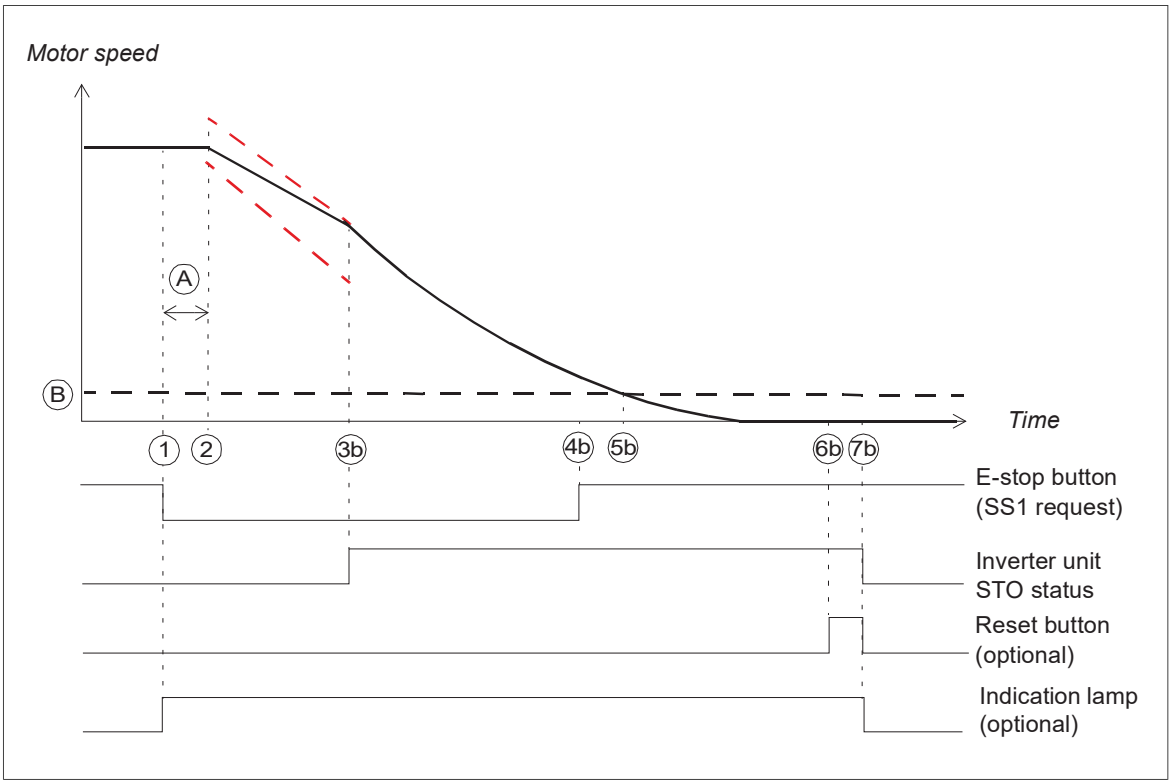

A	Safety function response time.
B	Zero speed limit: Speed limit for activating the STO function. This is a user-defined value (parameter *FSOGEN.52 Zero speed with encoder*).

1. The user pushes the emergency stop button (this activates the SS1 function of the FSO module). The emergency stop indication lamp comes on.
2. The inverter units start to decelerate the motors along the user-defined stop ramp. The FSO module starts the ramp monitoring (SAR1 parameters *200.112*, *SARx.21*, *SARx.22* and *SARx.02*).

3. b) The FSO module activates the FSO and inverter units' STO functions and stops the ramp monitoring. The motors coast to a stop.
4. b) The user releases the emergency stop button. ABB recommends that you do not release the emergency stop button before the motor has stopped.
5. b) The motor speed reaches the zero speed limit (B). The motor has stopped. Acknowledgement of the STO function is possible.
6. b) The user pushes the reset button (this resets the emergency stop circuit and acknowledges the STO function).
7. b) The FSO module deactivates the STO function in the inverter units (automatic acknowledgement). The emergency stop indication lamp goes off. If the FSO module is configured to generate a fault after a limit hit (parameter *FSOGEN.62*), the user must reset the inverter units before they are ready for a restart.

Operation principle diagrams

This diagram is an example circuit diagram without the safety encoder interface.

The figure shows a simplified operation principle. For a more detailed description, refer to the circuit diagrams delivered with the drive.

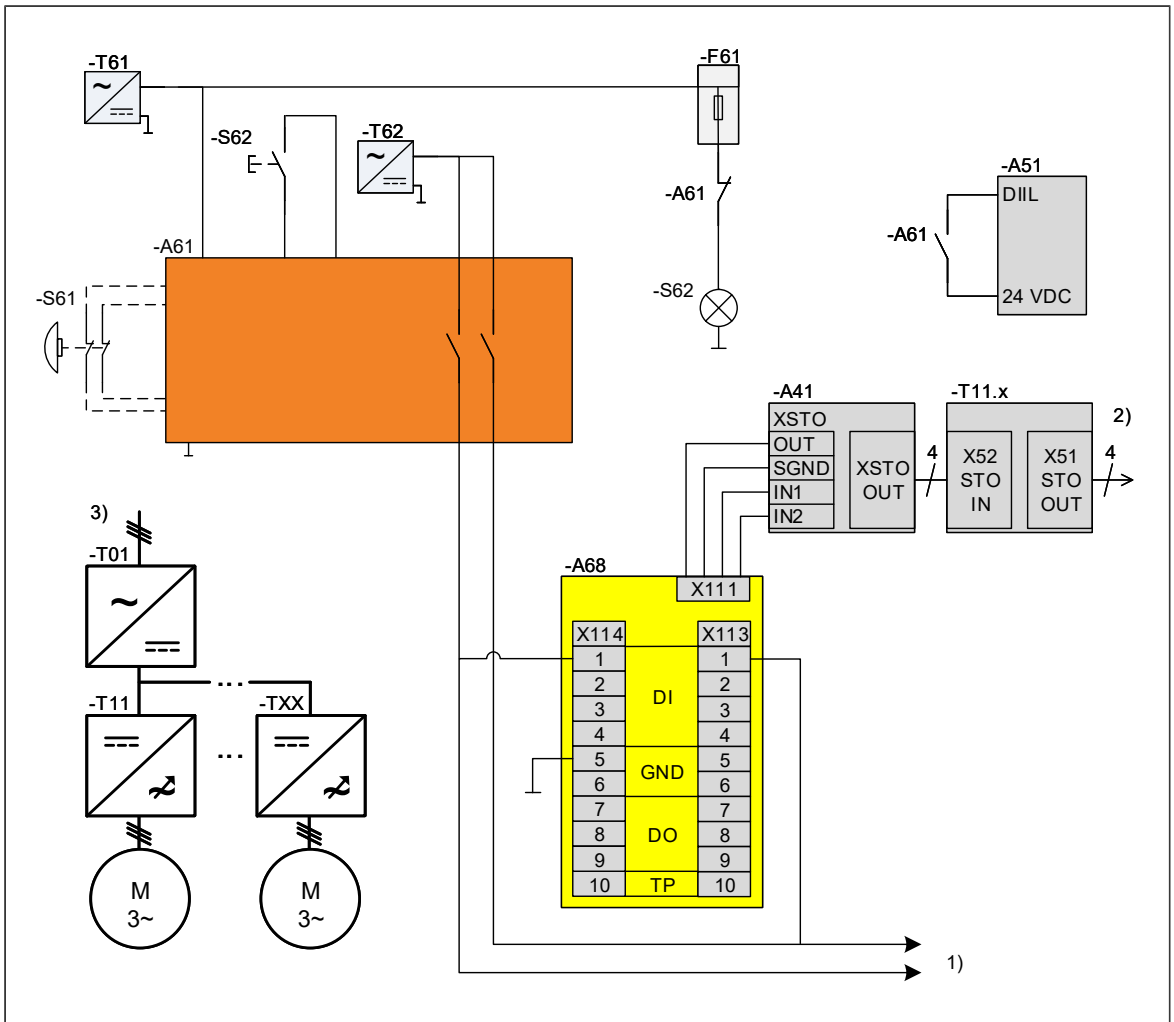

- - -	The dashed line in the figure shows a user-defined installation.
A41	Inverter control unit

A51	Supply control unit
A61	Emergency stop safety relay
A68	FSO-12/-21 safety functions module
F61	Circuit protection switch
S61	Emergency stop button (user-defined)
S62	Emergency stop reset button with indicator light
T61	24 V power supply
T62	24 V power supply
T01	Supply unit
T11 … Txx	Inverter unit(s)
T11.x	Inverter module(s) under inverter unit T11
X111	STO connections to inverter control unit
X113, X114	Terminal block in the FSO module
1)	To parallel FSO modules (if any)
2)	To parallel inverter modules (if any)
3)	Main circuit

Step	Operation
	Initial status: The drive is in operation and the motors are running.
1	The user activates emergency stop with the emergency stop button [S61]. The emergency stop safety relay [A61] de-energizes the applicable digital inputs on the FSO module [A68]. This activates the safety function in the FSO module. The emergency stop safety relay [A61] de-energizes the DIIL input on the supply control unit [A51]. This gives an emergency stop command to the supply unit [T01].
2	Emergency stop, stop category 0: The FSO module activates the STO function in the inverter units. The motors coast to a stop. Emergency stop, stop category 1: The inverter units decelerate the motors to zero speed. The FSO module then activates the STO function in the inverter units.
3	The emergency stop reset button indicator light [S62] comes on.
4	Normal operation continues after the user: • releases the emergency stop button [S61] to normal (up) position • pushes the emergency stop reset button [S62], which resets the emergency stop circuit • resets the inverter units if a fault was generated (see FSO parameter *FSOGEN.61 STO indication ext request*, and drive parameter *31.22 STO indication run/stop*) • makes sure that the drive has received the start signal (depends on the configuration, see the firmware manual).

Master-follower configuration between line-ups

Several line-ups can be connected to the same emergency stop network. The emergency stop button and the reset button with the indicator light are in the master line-up. There can be one or more follower line-ups which receive the emergency stop command from the

master line-up. This diagram shows the general principle of the master-follower configuration between two line-ups. For more information, refer to the circuit diagrams of the delivery.

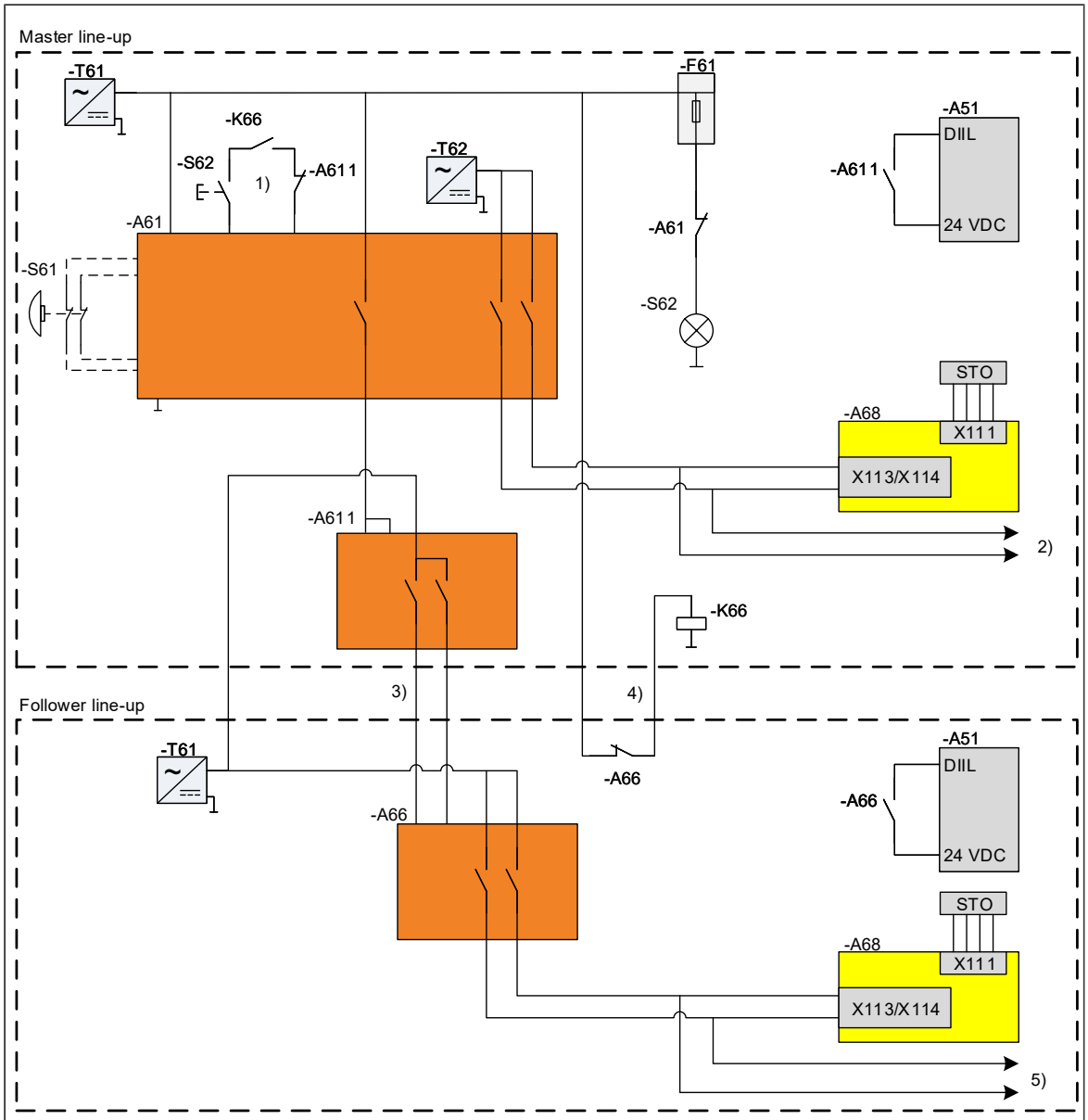

A51	Supply control unit
A61	Emergency stop safety relay (in supply unit of master line-up)
A66	Follower line-up safety relay (in supply unit of follower line-up)
A68	FSO-12/-21 safety functions module
A611	Extension safety relay
F61	Circuit protection switch
K66	Safety relay
S61	Emergency stop button (optional or user-defined)
S62	Emergency stop reset button with indicator light
T61	24 V power supply

T62	24 V power supply for Safe torque off
X113, X114	Terminal block in the FSO module
1)	Reset circuit
2)	To parallel FSO-modules in master line-up
3)	Emergency stop activation signal from master line-up
4)	Emergency stop feedback signal to master line-up
5)	To parallel FSO-modules in follower line-up

Fault reaction function

Definition: A safety function requires a “fault reaction function” that tries to initiate a safe state if it detects a failure in the safety system.

Examples of different failures:

- a short or open circuit or redundancy failure of the emergency stop button wiring chain
- an internal failure in the FSO or FSE-31 modules, the safety encoder or the inverter unit STO.

This section describes the fault reaction functions in the FSO and FSE-31 modules, the safety relay, the safety encoder and the inverter unit STO.

Safety relay

The fault reaction function of the emergency stop safety relay [A61] trips, if it detects a failure in the safety circuit (for example, short circuit between signals, open circuit, redundancy fault when the emergency stop button is pushed). The fault reaction function activates the drive emergency stop command. The fault reaction function keeps the emergency stop command activated and the indication lamp of the reset button on until the fault is repaired.

The emergency stop reset circuit must be open when the user releases the emergency stop button. If the reset circuit is closed, the emergency stop safety relay [A61] does not close.

FSO module

The fault reaction function of the FSO module trips the inverter unit if it detects a failure. The FSO module activates the STO function or the Safe stop emergency (SSE) function. This activates the inverter unit STO function. The inverter unit STO function is active until the fault is repaired.

The FSO module goes into Fail-safe mode. The STATUS/FAULT LED of the FSO module is red until the fault is repaired. To exit the Fail-safe mode, remove the cause of the fault and reset the FSO module.

For more information, refer to the inverter unit firmware manual and the FSO module user’s manual.

Resetting the FSO module

To reset the FSO module:

- switch the power off and on, or
- click the **Reboot FSO** button on the Safety view of the Drive Composer pro PC tool, or
- use the inverter unit parameter *96.09 FSO reboot*.

FSE-31 module and safety encoder

The fault reaction function depends on the value of FSO parameter *S_ENCGEN.11 FSE diagnostic failure reaction*.

If there is a fault in the FSE-31 module or safety encoder, and parameter *S_ENCGEN.11* is set to value *STO*, the FSO-21 module goes into Fail-safe mode and activates the inverter unit STO function. To exit the Fail-safe mode, remove the cause of the fault and reset the FSO module.

In FSE-31 module faults, the STATUS/FAULT LED of the FSO-21 module is red and the STATUS LED of the FSE-31 module is off. The inverter unit also indicates some FSE-31 module faults.

In safety encoder faults, the STATUS/FAULT LED of the FSO-21 module is red and the ENC STATUS LED of the FSE-31 module is off. The inverter unit also indicates a safety encoder fault. The safety encoder goes into the Safe state. To exit the Safe state, remove the cause of the fault and reboot the safety encoder (for example, switch the power off and on).

For more information, refer to the inverter unit firmware manual, *FSO-21 safety functions module user's manual* (3AXD50000015614 [English]) and *FSE-31 pulse encoder interface module user's manual* (3AXD50000016597 [English]).

Inverter unit STO function

The inverter unit STO function has internal fault diagnostics and a fault reaction function, which causes a fault trip if it detects a redundancy fault of STO control signals or an internal failure. Refer to the hardware and firmware manuals of the inverter unit.

Hardware settings

The settings in the emergency stop safety relay [A61] are:

- Cross fault detection is set to *With*
- Start mode is set to *Manual*.

Note: If the cross fault detection is set to *Without*, the fault diagnostics of the wiring decreases.

For more information, refer to the circuit diagrams delivered with the drive.

4

Electrical installation

Contents of this chapter

This chapter describes the wiring of the safety option done at the factory and contains guidelines for making user connections.

Wiring

WARNING!
Obey the safety instructions of the drive. If you ignore them, injury or death, or damage to the equipment can occur. If you are not a qualified electrical professional, do not do installation, commissioning or maintenance work.

If option +G331 has been selected, one emergency stop button is installed on the cabinet door and connected to the drive at the factory. There are double contacts in the emergency stop button and double wiring (redundant two-channel connection) between the button and the emergency stop safety relay [A61]. The safety relay detects cross faults and faults across one contact from the emergency stop button.

There is an emergency stop reset button on the cabinet door. The reset button is connected to the drive at the factory.

There is an extension terminal block [X68] inside the inverter unit cabinet. The tables below show the connections between the extension terminal block [X68] and the FSO module connectors [X113] and [X114].

FSO X113	1	2	3	4	5	6	7	8	9	10
X68	3	4	5	6	7	8, 9	10	11	12	13, 14, 15, 16

FSO X114	1	2	3	4	5	6	7	8	9	10
X68	17	18	19	20	21	22, 23	24	25	26	27, 28, 29, 30

There is a terminal block [X60] inside the cabinet of the supply unit for the connections of the emergency stop button [S61] and the reset button [S62].

If necessary, install additional emergency stop buttons on site. Refer to the circuit diagrams delivered with the drive. Obey these general rules:

1. Use only double-contact buttons approved for emergency stop circuits.
2. Connect the emergency stop buttons with two conductors (two-channel connection). Keep the channels separate.

   Note: If you use only one channel in a two-channel implementation, or if the channels are connected together, the cross fault detection of the emergency stop relay detects a redundancy fault and activates the fault reaction function.

   Note: If you change the input and the parameter settings in the FSO module into a one-channel implementation, it has an effect on the safety integrity of the safety function. In this case, the safety data that ABB has calculated for the function is not valid.

   Note: The safety circuit design can be different when modified according to the customer's safety requirements. Refer to the circuit diagrams delivered with the drive.
3. Use shielded, twisted pair cables. ABB recommends double-shielded cable and gold-plated contacts in the emergency stop button.
4. Make sure that the sum resistance for one channel (loop resistance) is not more than 70 ohms.
5. Obey the general control cable installation instructions given in the inverter unit hardware manual.

You can also install additional reset buttons and indication lamps for the emergency stop circuit on site. ABB recommends gold-plated NC contacts in the reset button. Refer to the circuit diagrams delivered with the drive. Obey the rules below:

1. Sum resistance of the external reset circuit must not be more than 70 ohms.
2. Obey the general control cable installation instructions given in the drive hardware manual.

<u>If you use a safety encoder in the application:</u> Connect the safety encoders to the FSE-31 modules on site. Obey the instructions of the encoder manufacturer and these rules:

- Use a double-shielded, twisted pair cable.
- The maximum permitted cable length between the safety encoder and the FSE-31 module is 300 m (980 ft).

For more information, see *FSE-31 pulse encoder interface module user's manual* (3AXD50000016597 [English]).

5

Parameter settings

Contents of this chapter

This chapter gives the parameters that you must set in the FSO modules and the inverter units.

Competence

The person who configures the safety functions in the FSO module must be a competent person as required by IEC 61508-1 clause 6. In this context, the person must have expertise and knowledge of functional safety, the safety functions and the configuration of the FSO module. ABB has training courses on the FSO module.

FSO module parameter settings

The default parameter values shown below are example values for the safety functions described in this manual. Actual parameter values of the delivery can be different. Always make sure that:

- the parameter settings agree with the circuit diagrams, and
- the design agrees with the safety requirements of the application.

You must use the Drive Composer pro PC tool to set the FSO module parameters. You also need a password to download the configuration to the FSO module from Drive Composer pro. For the default password of the FSO module, refer to the FSO module user’s manual. For more information on Drive Composer pro, refer to *Drive Composer start-up and maintenance PC tool user's manual* (3AUA0000094606 [English]).

Note: When the motor is running, you cannot change the password, adjust parameter values, or upload or download the FSO configuration file.

Note: The FSO module has a factory reset button. The factory reset button clears the configuration and sets the parameters to the factory default values. These values are not the same as the pre-set values in an FSO module that was ordered as an option (with a plus code). You cannot restart the drive with the factory default values. If you do a factory reset of the FSO module, you must reconfigure the FSO module and set all applicable parameters. For more information on the factory reset, refer to the FSO module user's manual.

When using SS1, SLS or SMS safety functions: The FSO module activates the STO function if the motor speed hits a ramp monitoring limit during the deceleration ramp. The FSO module activates the SSE function if the motor speed hits a trip limit during SLS or SMS monitoring. Thus, you must also configure the STO and SSE functions.

Follow the configuration steps described in the FSO module user's manual, chapter *Configuration*.

There are parameters that you must always set and parameters that are related to some safety functions only. These tables list all the parameters that you must check and set for option +Q979. The example values are applicable only to option +Q979.

General parameters

These parameters are common to all safety functions.

Index	Name	Example value	Description
FSOGEN.21	Motor nominal speed	1500 rpm	Sets the nominal motor speed. Must be equal to the value on the motor rating plate.
FSOGEN.22	Motor nominal frequency	50 Hz	Sets the nominal motor frequency. Must be equal to the value on the motor rating plate.
FSOGEN.41	Power-up acknowledgement	Automatic	Sets the power-up acknowledgement method of the FSO module. *Automatic*: It is not necessary to push a reset button after energizing the FSO module. The FSO module generates the acknowledgement signal automatically after the power-up. *Manual*: The FSO module reads the external acknowledgement signal through the digital input defined by parameter *FSOGEN.42 Acknowledgement button input*. Make sure that the value is *Automatic*.
FSOGEN.42	Acknowledgement button input	None	Selects the digital input for the acknowledgement signal when parameter *FSOGEN.41 Power-up acknowledgement* or *STO.02 STO acknowledgement* is set to *Manual*. In the safety functions described in this manual, parameters *FSOGEN.41 Power-up acknowledgement* and *STO.02 STO acknowledgement* are set to *Automatic*, and this digital input is not used. The safety functions are configured not to require a reset/acknowledgement of the safety function after power-up or the removal of the safety function request.

Index	Name	Example value	Description
FSOGEN.51	Zero speed without encoder	90 rpm	Sets the general zero speed limit for safety functions when a safety encoder is not used. Emergency stop, stop category 0: This value has no effect in the operation. Emergency stop, stop category 1: The FSO module activates the inverter unit STO function when the inverter unit has decelerated the motor speed below this value. Adjust the default value when necessary.
FSOGEN.52	Zero speed with encoder	10 rpm	Sets the general zero speed limit for safety functions when a safety encoder is used. Emergency stop, stop category 0: The indication lamp comes on when the motor speed goes below this value. Adjust the default value when necessary. Emergency stop, stop category 1: The FSO module activates inverter unit STO function when the inverter unit has decelerated the motor speed below this value. Adjust the default value when necessary. **Note:** This parameter is used only with FSO-21 and when a safety encoder is used in the application.
FSOGEN.61	STO indication ext request	Warning	Sets the type of the indication that the FSO module generates and sends to the inverter unit after external requests that end to a successful activation of the drive STO (STO, SSE or SS1). In the safety functions described in this manual, you can use this indication as the Emergency stop indication message. Adjust the default value when necessary.
FSOGEN.62	STO indication safety limit	Fault	Sets the type of the indication that the FSO module generates and sends to the drive/inverter unit for limit hits during ramp and time monitoring of safety ramps SAR0 and SAR1. Emergency stop, stop category 0: This value has no effect in the operation. Emergency stop, stop category 1: When the motor speed does not follow the stop ramp or the time limit is exceeded, the FSO module activates the STO function and generates this user-defined indication. If necessary, adjust the default setting. If you select *Fault*, you must reset the inverter unit before you can restart it.

Parameters for the STO function

These parameters are related to the STO function of the FSO module. The FSO module can activate the STO function in internal fault situations. The Emergency stop, stop category 0 safety function uses this function.

Index	Name	Example value	Description
STO.02	STO acknowledge-ment	Automatic	Sets the acknowledgement method used in the STO, SSE and SS1 functions. *Automatic*: The FSO module generates the STO acknowledgement signal automatically, and the user does not have to press a reset button (see parameter *FSOGEN.42 Acknowledgement button input*). In the safety functions described in this manual, the emergency stop reset button is connected to the safety relay, and the FSO module must acknowledge the STO automatically. Make sure that the value is *Automatic*.
STO.11	STO input A	Stop cat. 0: DI X113:1 & X114:1 Stop cat. 1: None	Sets the digital input that is connected to the primary input of the STO function. Emergency stop, stop category 0: For option +Q979, ABB has connected the emergency stop button to this digital input at the factory. Make sure that the setting agrees with the circuit diagrams of the delivery. Emergency stop, stop category 1: Make sure that this parameter is set to *None*. (An external signal cannot start the STO function.)
STO.13	Restart delay after STO	2000 ms	Sets the time after which the restart of the drive is permitted after the FSO module has activated the drive STO. With this parameter, you can allow a restart of the drive before the motor has stopped (fly-start). This parameter is valid only if the STO function is requested from STO input A (*STO.11*). Emergency stop, stop category 0: Adjust the value when necessary. If you do not want to use the fly-start feature, set this parameter to the same value as parameter *STO.14*. Emergency stop, stop category 1: This value has no effect.

Index	Name	Example value	Description
STO.14	Time to zero speed with STO and modoff	2000 ms	The time it takes for the motor to coast to a standstill from maximum process speed. This must be measured with the Drive Composer pro PC tool when an encoder is used for motor control (otherwise you have to make sure that the motor shaft has stopped rotating by other means, eg, visually.). Acknowledgement is permitted after coast stop in the STO, SSE and SS1 functions (when SBC is not used). If SBC is used, see parameter *SBC.13 SBC time to zero speed*. If an external request activates the STO function, this parameter sets the time after which the function is completed and the STO completed indication goes on. In this case, parameter *STO.13 Restart delay after STO* defines the time after which the acknowledgement is permitted. If the drive STO is activated or modulation stopped while a monitoring safety function is indicating “unsafe”, after this time acknowledgement is permitted. For example, if the drive modulation is lost during SLS deceleration ramp, SLS OK will be indicated after this time has elapsed. When an encoder is used: This parameter is relevant only if there is an encoder failure and the FSO module activates the STO function.
SBC usage			
SBC.11	STO SBC usage	None	Sets how the mechanical brake is used together with the STO function. *None*: This feature is not in use. In this manual, it is assumed that you do not use a brake. If you do, you must take care of its on/off control by the FSO module and change this and other settings. Refer to the FSO module user’s manual.

Parameters for the SSE function

These parameters are related to the Safe stop emergency (SSE) function of the FSO module. The FSO module can activate the SSE function in internal fault situations.

Index	Name	Example value	Description
SSE.13	SSE function	Immediate STO or Emergency ramp	Sets the type of the SSE function. *Immediate STO*: The FSO module activates the inverter unit STO function immediately after the SSE request. *Emergency ramp:* The FSO module decelerates the motor to zero speed, and then activates the inverter unit STO function. SAR0 parameters define the deceleration ramp. For more information, refer to the FSO module user's manual. Zero speed is defined by parameter *FSOGEN.51 Zero speed without encoder* or *FSOGEN.52 Zero speed with encoder*. For option +Q979, ABB sets this parameter to value *Immediate STO* at the factory. Adjust the default value when necessary.
SBC usage			
SBC.15	SSE/SS1 SBC speed	0 rpm	Sets the absolute speed below which the FSO module activates the brake (SBC) while ramping. *0 rpm*: The feature is not in use. In this manual, it is assumed that you do not use a brake. If you do, you must take care of its on/off control by the FSO module and change this and other settings. Refer to the FSO module user’s manual.

Parameters for Emergency stop, stop category 0

The Emergency stop, stop category 0 safety function uses the STO function of the FSO module, refer to section *Parameters for the STO function (page 40)*. There are no additional parameters related to this function.

Parameters for Emergency stop, stop category 1

The Emergency stop, stop category 1 safety function uses the SS1 function of the FSO module. Set these parameters only for this function.

Index	Name	Example value	Description
SS1.01	SS1 activity and version	Version 1	Activates or deactivates the SS1 function and shows the version of the SS1 function. *Version 1*: Activates version 1 of the SS1 function.

Index	Name	Example value	Description
SS1.11	SS1 input A	DI X113:1 & X114:1	Sets the digital input that is connected to the primary input of the SS1 function. For option +Q979, ABB has connected the emergency stop button to this input at the factory. Make sure that this value agrees with the wiring. Refer to the circuit diagrams of the delivery. Also make sure that you do not use the same input for other functions at the same time (for example, the STO function).
SS1.13	SS1 type	SS1-r or SS1-t	Sets the method used for the SS1 monitoring. Adjust the default value when necessary. Time monitoring (SS1-t): The FSO module monitors that a user-defined deceleration time limit is not exceeded. See parameter *SS1.14*. Ramp monitoring (SS1-r): The FSO module monitors that the motor decelerates along a user-defined stop ramp. See SAR1 ramp parameters *200.112*, *SARx.21*, *SARx.22* and *SARx.02*.
SS1.14	SS1-t delay for STO	20000 ms	Sets the SS1-t monitoring time after which the FSO module activates the drive STO at the latest, if the motor speed has not reached the zero speed limit (parameter *FSOGEN.51* or *FSOGEN.52*) yet. For more information, refer to the operation time scheme diagrams. Time monitoring: This value sets the security delay that the FSO module monitors. Adjust the default value when necessary. Ramp monitoring: This value has no effect in the operation.
SS1.15	SS1-r ramp zero speed delay for STO	0 ms	Sets an extra delay time for the activation of the drive STO at the zero speed limit in the SS1 function. With this parameter, the FSO module delays the STO activation so that the drive is able to reach the axle zero speed before the FSO module activates the STO function. The delay counter starts when the motor speed reaches the zero speed limit (parameter *FSOGEN.51* or *FSOGEN.52*). After this delay has elapsed, the FSO module activates the drive STO function. You can use this parameter when the motor rotates a high inertia load. **Note:** The FSO module activates the drive STO immediately if the drive stops modulating before the delay has passed (that is, the motor actual speed reaches 0 rpm). Adjust the default value when necessary.

Index	Name	Example value	Description
SAR1 ramp settings			
200.112	SAR1 ramp time to zero	2000 ms	Sets the target time for the stop ramp SAR1 that is used in the SS1 function. Adjust the default value when necessary. Target time = The time in which the drive decelerates the motor from speed *200.202 SAR speed scaling* to zero. **Note:** With value *0 ms*, the drive uses the emergency stop ramp set by drive parameter *23.23*. Also in this case, the FSO module only monitors the actual ramp (ramp monitoring or time monitoring).
200.202	SAR speed scaling	1500 rpm	Sets a speed value that the FSO module uses as a reference point in ramp parameter calculations (see SAR1 ramp parameters *200.112*, *SARx.21*, *SARx.22* and *SARx.02*). Adjust the default value when necessary.
SARx.02	SAR initial allowed range	100 ms	Sets the initial allowed range for the SARx ramp. This parameter moves the location of the maximum monitoring ramp forward on the time axis, when monitoring is started. The slope of the ramp stays the same as defined with parameters *200.202* and *SARx.12* (SAR0) or *SARx.22* (SAR1). Time monitoring: This value has no effect in the operation. Ramp monitoring: Adjust the default value according to the application requirements.
SARx.21	SAR1 min ramp time to zero	1000 ms	Sets the minimum ramp time for the SAR1 ramp monitoring. Time monitoring: This value has no effect in the operation. Ramp monitoring: Sets the minimum deceleration time for the emergency stop. Adjust the default value according to the application requirements. **Note:** With value *0 ms*, the minimum ramp is not monitored.
SARx.22	SAR1 max ramp time to zero	3000 ms	Sets the maximum ramp time for the SAR1 ramp monitoring. Time monitoring: This value has no effect in the operation. Ramp monitoring: Sets the maximum deceleration time for the emergency stop. Adjust the default value according to the application requirements.
SBC usage			
SBC.15	SSE/SS1 SBC speed	0 rpm	Sets the absolute speed below which the FSO module activates the brake (SBC) while ramping. *0 rpm*: The feature is not in use. In this manual, it is assumed that you do not use a brake. If you do, you must take care of its on/off control by the FSO module and change this and other settings. Refer to the FSO module user's manual.

Changing the stop category from 0 to 1

Stop category 0 is the default setting. This category uses the STO function of the FSO module. Stop category 1 uses the SS1 function of the FSO module.

To change the stop category from 0 to 1:

- set the parameters given in this section
- set the parameters given in section *Parameters for Emergency stop, stop category 1 (page 42)*
- if necessary, set the applicable parameters given in section *Inverter unit parameter settings (page 47)*.

Index	Name	Preset value (stop cat. 0)	Value in stop cat. 1
STO.11	STO input A	DI X113:1 & X114:1	None
FSOGEN.51	Zero speed without encoder	90 rpm	If you do not use a safety encoder, adjust the default value.
FSOGEN.52	Zero speed with encoder	10 rpm	If you use a safety encoder, adjust the default value.
FSOGEN.62	STO indication safety limit	Fault	Adjust the default value when necessary.

FSE-31 module and safety pulse encoder related parameters

Set these parameters when you use a safety pulse encoder in the safety application.

Index	Name	Example value	Description
200.231	FSE 3X act and par version	Version 1	Activates the FSE-31 encoder interface and shows the version of the encoder parameter groups (91 and 92).
200.232	Number of encoders	Single encoder CH1	Shows the number of safety encoders connected to the FSE-31 module.
S_ENCGEN.01	Safe pulse encoder version	Version 1	Activates the safety encoder and shows the version parameter group S_ENCGEN.
S_ENCGEN.11	FSE diagnostic failure reaction	STO	Sets the action taken when there is a problem with the FSE-31 module or the safety encoder. *STO*: The FSO module goes into Fail-safe mode and activates the inverter unit STO function. *No STO*: If there are no active safety functions, the FSO module sends a warning to the drive. If there are active safety functions, the FSO module goes into Fail-safe mode. *Est switch not active load*: With some restrictions, the FSO module sends a warning to the drive and starts to use an estimated value of the motor speed (safe speed estimate). If you select this value, you must also set the parameters related to safe speed estimate. Refer to the FSO-21 module user's manual. Do not select this value in applications with an active load.

Index	Name	Example value	Description
S_ENCGEN.14	Enc speed cross comp tolerance	1 rpm	Sets the encoder speed cross comparison tolerance. This defines how much the axle speed of the motor can change within 1 ms. Adjust the default value to agree with the motor. This parameter is used for the encoder diagnostic. It defines how large the difference between the speed information from channel A and B of the encoder can be. If the difference between the speed information channels is larger than the value of this parameter, FSO will safely stop the system (STO). The correct value depends on the configuration (motor and load). Typically this value is 2 … 10 rpm. A value that is too small will cause an encoder fault (A7D8) and a value that is too large will prevent encoder diagnostic related to this parameter. For more information, refer to the FSO-21 module user's manual.
S_ENCGEN.41	Gear numerator encoder 1	1	Sets the rotation direction for the safety encoder. With this parameter, you can change the rotation direction of the motor. If necessary, adjust the default value.
91.11	Module 1 type	FSE-31	Sets the type of the safety encoder interface module 1.
91.12	Module 1 location	2	Sets the slot in which the safety encoder interface module 1 is located.
92.01	Encoder 1 type	HTL1	Activates or deactivates the communication with the safety encoder interface module 1 and sets the type for the safety encoder.
92.02	Encoder 1 source	Module 1	Sets the safety encoder interface module that the safety encoder 1 is connected to.
92.10	Pulses/revolution	2048	Sets the number of HTL pulses per revolution for safety encoder 1. Adjust the default value to agree with the safety encoder. Make sure that the value is the same that is shown on the encoder nameplate.
92.17	Accepted pulse freq of encoder 1	300 kHz	Sets the maximum pulse frequency range of encoder 1. Adjust the default value to agree with the motor and safety encoder. You can use this formula to define the value: r_max · ppr_enc + 10%, where • r_max = the maximum motor speed used in the application (or the motor nominal speed) • ppr_enc = Pulses/revolution of the safety encoder (parameter *92.10*).

Inverter unit parameter settings

The table that follows gives the parameters related to the safety function in the ACS880 primary control program. The parameters are set at the factory.

No.	Name	Default value [1)]	Description
31.22	STO indication run/stop	Warning/Warning	Selects which indications are given when the Safe torque off (STO) function is activated. *Warning/Warning* is the recommended setting. **Note:** ABB recommends that you do not set this parameter to *Fault/Fault*, *Fault/Warning*, or *Fault/Event*. These values will cause the inverter units to trip on a fault each time that the FSO module activates the inverter unit STO function.

[1)] Value set by ABB at the factory for the default design.

The table that follows gives the parameters that you must set when you use a safety encoder.

No.	Name	Value	Description
90.41	Motor feedback selection	Encoder 1	Selects the motor speed feedback value used during motor control.
90.45	Motor feedback fault	Warning	Selects how the drive reacts to loss of measured motor feedback. To configure the inverter units to trip on encoder faults, set this parameter to value *Fault*. For more information, refer to the firmware manual.
92.21	Encoder cable fault mode	A+, A-, B+, B-, Z+, Z-	Selects which encoder cable channels and wires are monitored for wiring faults.

The table that follows gives the parameters that you must set when the Emergency stop, stop category 1 function is used, and FSO parameter *200.112 SAR1 ramp time to zero* is set to *0*.

No.	Name	Value	Description
21.04	Emergency stop mode	Eme ramp stop (Off3)	Selects the way the motor is stopped when an emergency stop command is received.
23.23	Emergency stop time	User-defined	Defines the deceleration rate for emergency stop as the time it would take for the speed to decrease to zero speed from the value of FSO parameter *200.202 SAR speed scaling*. Zero speed is defined by FSO parameter *FSOGEN.51 Zero speed without encoder* or *FSOGEN.52 Zero speed with encoder*. Set this parameter according to the application requirements.

If FSO parameter *200.112 SAR1 ramp time to zero* is set to *0*, the inverter unit parameters define the stop ramp that is used in the SS1 function (stop category 1). The FSO module monitors the actual stop ramp (ramp monitoring or time monitoring). For more information, refer to the firmware manual and FSO module user's manual.

Supply unit parameter settings

The table that follows gives the parameters related to the safety function in the ACS880 supply control programs. The parameters are set at the factory.

No.	Name	Default value [1]	Description
121.04	Emergency stop mode	Warning	Selects the way the supply unit is stopped when an emergency stop command is received.
121.05	Emergency stop source	DIIL	Selects the source of the emergency stop signal. This parameter cannot be changed while the supply unit is running.

[1] Value set by ABB at the factory for the default design.

For more information, refer to the applicable firmware manual.

6

Use of the safety function

Contents of this chapter

This chapter describes the use of the safety function with factory default settings.

Activating the safety function

Activation procedure:

1. Push the emergency stop button [S61]. The emergency stop is activated and the button locks in the “ON” (open) position.
   Warning AAA1 FSO STO request (stop category 0) or AAA3 FSO SS1 request (stop category 1) is shown.
   When the emergency stop is active, these indications are shown:
   - the emergency stop reset button indicator light [S62] on the cabinet door is on.

If configured with parameter *31.22 STO indication run/stop*, an indication for Safe torque off is shown when the inverter unit STO is activated.

The indications that the FSO module generates are configurable. For more information, see chapter *Parameter settings* in this manual and chapter *Fault tracing* in the FSO module user’s manual.

Resetting the safety function

WARNING!
Make sure that the drive does not start accidentally. This can occur after the acknowledgement of the safety function, if a level-triggered start command and the start enable signal are on at the same time.

1. Turn the emergency stop button [S61] until it releases.
2. Push the emergency stop reset button [S62] on the cabinet door for 0.1 … 3 seconds. The emergency stop reset button indicator light [S62] goes off, and the emergency stop is deactivated.
3. If necessary, reset faults from the inverter units and the supply unit.
4. Make sure that the inverter units receive the start signal.
5. You can now restart the inverter units.

For more information, refer to the hardware and firmware manuals.

You must also reset the emergency stop safety relay [A61] with the emergency stop reset button [S62] each time after you energize the relay.

7

Start-up and validation test

Contents of this chapter

This chapter describes the start-up, validation test procedure, and validation of the safety function.

Validation of the safety functions

You must do a validation test to make sure that the safety function operates correctly and according to the safety requirements.

Competence

The person who does the validation test of the safety function must be a competent person with expertise and knowledge of the safety function and functional safety, as required by IEC 61508-1 clause 6. This person must document and sign the test procedures and report.

Validation procedure

You must validate the general settings of the FSO module before you validate the safety function. Refer to the FSO module user's manual, chapter *Verification and validation*.

You must do the validation test using the checklist given in this manual and the validation test plan of the complete safety system:

- at the initial start-up of the safety function
- after changes related to the safety function (wiring, components, safety function -related parameter settings, etc.)
- after changes related to the power unit or its circuit boards
- after maintenance work related to the safety function
- at the proof test of the safety function.

The validation test must include at least the following steps:

- you must have a validation test plan
- you must test all commissioned functions for correct operation, from each operation location
- you must document all validation tests
- you must sign and store the validation test report for further reference.

Validation test reports

You must store the signed validation test reports in the logbook of the machine. The report must include, as required by the referred standards:

- a description of the safety application (including a figure)
- a description and revisions of safety components that are used in the safety application
- a list of all safety functions that are used in the safety application
- a list of all safety-related parameters and their values
- documentation of start-up activities, references to failure reports and resolution of failures
- the test results for each safety function, checksums, date of the tests, and confirmation by the test personnel.

You must store any new validation test reports done due to changes or maintenance in the logbook of the machine.

Start-up and validation test

You must use the Drive Composer pro PC tool to do the start-up and validation test.

Action	☑
WARNING! Obey the safety instructions. If you ignore them, injury or death, or damage to the equipment can occur.	☐
Initial status	
Safety encoder interface: If you use a safety encoder in the safety application, validate the safety encoder interface as described in *FSO-21 safety functions module user's manual* (3AXD50000015614 [English]), chapter *Verification and validation*.	☐
Make sure that the drive is ready for use, that is, you have done the tasks of the drive start-up procedure. Refer to the hardware manuals.	☐
Make sure that the FSO STO function is configured and validated. Refer to the FSO module user's manual. Internal monitoring of the FSO module can trigger the STO function even if you have not defined an external request signal. The STO function must be validated before other safety functions. **Note:** If parameter *S_ENCGEN.11* is set to *Est switch not active load*, both STO function with speed estimate and STO function with encoder feedback must be tested - most importantly, the value of parameter *STO.14* must be set according to the application requirements.	☐

Action	☑
Checks and settings with no voltage connected	
Stop the drive and do the steps in section *Electrical safety precautions (page 11)* before you start the work.	☐
If you made connections to the emergency stop circuit on site (for example, added emergency stop buttons or connected shipping splits of large drives), do a check of the connections against the applicable circuit diagrams.	☐
Inverter units with parallel R8i inverter modules: Make sure that the XSTO.OUT output on the inverter control unit [A41] is chained to the STO inputs of all inverter modules.	☐
Make sure that the hardware settings of the safety function are set as defined in this manual.	☐
Settings with voltage connected	
Close the cabinet doors and power up the drive. Refer to the hardware manual.	☐
Make sure that the parameter settings related to the safety functions are correct. Refer to chapter *Parameter settings*.	☐
Save the FSO safety file (button **Save safety file** in the Drive Composer pro PC tool). **Note:** The FSO safety file is not included in the drive backup process.	☐
Validation test	
ABB recommends that you monitor at least these signals with the Drive Composer PC tool: • 01.01 Motor speed used (rpm) • 01.02 Motor speed estimated (rpm) • 01.07 Motor current (A) • 01.10 Motor torque (%) • 06.18 Start inhibit status word • 23.01 Speed ref ramp input (rpm) • 23.02 Speed ref ramp output (rpm) • 90.01 Motor speed for control (rpm) • When using an encoder, also: 90.10 Encoder 1 speed (rpm) • 200.01 FSO speed ch1 (rpm) • 200.02 FSO speed ch2 (rpm) • 200.03 FSO DI status • 200.04 FSO DO status • 200.05 FSO control word 1 • 200.06 FSO control word 2 • 200.07 FSO status word 1 • 200.08 FSO status word 2 • 200.09 Drive status word 1 • 200.10 Drive status word 2	☐
Make sure that it is safe to start, run and stop the motors during the test.	☐
Start the inverter units and make sure that the motors are running. If possible, use a motor speed close to the maximum speed of the application.	☐
Push the emergency stop button [S61].	☐
Emergency stop, stop category 0: Make sure that the inverter units stop the motors by coasting and that the correct warnings and indications are shown. Emergency stop, stop category 1: Make sure that the inverter units stop the motors by decelerating and that the correct warnings and indications are shown.	☐
Make sure that the emergency stop reset button indicator light [S62] comes on.	☐

Action	☑
Make sure that the inverter unit generates none of these faults: • STO hardware failure (5090) • Safe torque off 1 loss (FA81) • Safe torque off 2 loss (FA82) If the inverter unit generates these faults, refer to the fault tracing instructions in this manual.	☐
Make sure that you cannot start the inverter units or motors from any control location. Make sure that the inverter units or motors do not start when you switch the start signal off and on, or push the start key of the panel when the panel is in local control mode.	☐
Switch off the start signals of the inverter units.	☐
Turn the emergency stop button [S61] until it releases and returns to the up position.	☐
Push the emergency stop reset button [S62]. Make sure that: • the emergency stop reset button indicator light [S62] goes off • the inverter units do not restart automatically.	☐
Restart the inverter units and motors. Make sure that they operate normally.	☐
Do the test again from each operating location (for each emergency stop button and reset button).	☐
Create a backup file of the drive parameters with the Drive Composer pro PC tool.	☐
Save the FSO safety file with the button **Save safety file** in the Drive Composer pro PC tool.	☐
Fill in and sign the validation test report. Store the report in the logbook of the machine.	☐

8

Fault tracing

Contents of this chapter

This chapter provides general diagnostics and troubleshooting tips.

Fault tracing

The emergency stop safety relay [A61] type is DOLD LG 5925.

This table gives the indications of the DOLD LG 5925 relay:

LED	LED is on	LED is off
Netz	Power supply is connected.	Power supply is not connected, or there is an external error.
K1	Relay K1 is energized.	There is an external error.
K2	Relay K2 is energized.	There is an external error.

For more information, see the data sheet of the relay (www.dold.com).

If there is a fault, the emergency stop safety relay [A61] can go into a fault mode. If this occurs, you must restart the relay. Switch off the external power supply of the relay and then switch it back on.

Use a multimeter to measure the STO circuit connections, if the inverter unit generates one or more of these faults:

- STO hardware failure (5090)
- Safe torque off 1 loss (FA81)
- Safe torque off 2 loss (FA82)

Refer to the circuit diagrams delivered with the drive.

For more fault tracing possibilities, refer to the hardware and firmware manuals of the drive.

Reporting problems and failures related to safety functions

Contact ABB.

9

Maintenance

Contents of this chapter

This chapter contains information for the maintenance and decommissioning of the safety function.

Safety circuit maintenance

After the safety function is validated, it must be maintained by periodic proof testing.

If you change the wiring or a component after the start-up, replace a power unit or its circuit boards, replace the FSO or FSE-31 module, modify FSO module parameters, or restore parameters to their factory default values:

- Use only ABB-approved spare parts.
- Register the change to the change log for the safety circuit.
- If parameters were restored to the factory default values: Set the parameters related to the safety function.
- Do the validation test of the safety function.
- Document the tests and store the report into the logbook of the machine.

Proof test interval

Proof tests are used to detect failures in the safety function. To do a proof test, use the validation test procedure given in this manual.

Periodic proof testing of the safety function is necessary to maintain the required SIL/PL-level. In high demand mode of operation, the maximum proof test interval is 20 years. In low demand mode of operation, the maximum proof test interval is 2 or 5 years (high or low demand as defined in IEC 61508, IEC/EN 62061 and EN ISO 13849-1). Regardless of the mode of operation, it is a good practice to do the proof test for the safety function at least

once a year. It is also a good practice to include the proof test for the safety function in the routine maintenance program of the machinery.

The person responsible for the design of the complete safety system should also note the Recommendation of Use CNB/M/11.050 published by the European co-ordination of Notified Bodies for Machinery concerning dual-channel safety-related systems with electromechanical outputs:

- When the safety integrity requirement for the safety function is SIL 3 or PL e (cat. 3 or 4), the proof test for the function must be done at least every month.
- When the safety integrity requirement for the safety function is SIL 2 (HFT = 1) or PL d (cat. 3), the proof test for the function must be done at least every 12 months.

This is a recommendation and depends on the required (not achieved) SIL/PL. For example, contactors, breakers, safety relays, contactor relays, emergency stop buttons, switches, etc. are typically safety devices which have electromechanical outputs. The STO circuit of the inverter unit does not have electromechanical outputs. Also, the FSO and FSE-31 modules do not have electromechanical outputs.

Functional safety components

The mission time of functional safety components is 20 years which equals the time during which failure rates of electronic components remain constant. This applies to the components of the standard Safe torque off circuit as well as any modules, relays and, typically, any other components that are part of functional safety circuits.

The expiry of mission time terminates the certification and SIL/PL classification of the safety function. The following options exist:

- Renewal of the whole drive and all optional functional safety module(s) and components.
- Renewal of the components in the safety function circuit. In practice, this is economical only with larger drives that have replaceable circuit boards and other components such as relays.

Note that some of the components may already have been renewed earlier, restarting their mission time. The remaining mission time of the whole circuit is however determined by its oldest component.

Contact your local ABB service representative for more information.

Competence

The person who does the maintenance and proof test activities of the safety function must be a competent person with expertise and knowledge of the safety function and functional safety, as required by IEC 61508-1 clause 6.

Residual risk

The safety functions are used to reduce the recognized hazardous conditions. In spite of this, it is not always possible to eliminate all potential hazards. Thus, the warnings for the residual risks must be given to the operators.

Intentional misuse

The safety circuit is not designed to protect a machine against intentional misuse.

Decommissioning

When you decommission an emergency stop circuit or an inverter unit, make sure that the functional safety of the machine is maintained by other means until the decommissioning is completed.

10

Technical data

Contents of this chapter

This chapter gives the safety data, ambient conditions, and list of standards related to the product.

Safety data

Safety performance with different safety pulse encoders

See *FSE-31 pulse encoder interface module user's manual* (3AXD50000016597 [English]).

Safety data values

Each multidrives delivery is unique. If the customer has ordered safety data calculations (option +P947), ABB calculates the safety data and delivers it separately to the customer.

For the safety data of the FSO-21 and FSE-31 modules, see *FSO-21 safety functions module user's manual* (3AXD50000015614 [English]). For the safety data of the FSO-12 module, see *FSO-12 safety functions module user's manual* (3AXD50000015612 [English]).

Safety component types

Safety component types as defined in IEC 61508-2:

- emergency stop button: type A
- safety relay(s): type A
- FSO module: type B

- FSE module: type B
- inverter unit STO circuit:
  - air-cooled R1i…R7i inverter modules: type A
  - air-cooled R8i inverter modules: type B
  - liquid-cooled R7i…R8i inverter modules: type B.

Safety block diagrams

Each multidrives delivery is unique. If included in the customer order, ABB defines the safety block diagram for the safety function and delivers the diagram separately to the customer.

Relevant failure modes

Relevant failure modes are:

- internal failures of the emergency stop safety relay
- internal failures of the emergency stop button, the FSO module, the FSE module, and the inverter unit STO.

These failures are included in the failure rate value of the function.

The emergency stop safety relay [A61] detects open circuits, short circuits, and redundancy failures of the emergency stop input signal wirings. Similarly, it detects redundancy failures of the emergency stop button when the emergency stop request is on.

Fault exclusions

Fault exclusions (not considered in the calculations):

- short and open circuits in the cables of the safety circuit
- short and open circuits in the cabinet terminal blocks of the safety circuits.

Operation delays

Emergency stop total delay and fault reaction response time (includes the response time of the inverter unit STO):

- Stop category 0: less than 500 ms
- Stop category 1: Emergency stop ramp time + possible STO delay settings + less than 500 ms.

Note: If you use a safety pulse encoder, you must add the delays of the encoder when defining the total response time for the safety function and the fault reaction function.

Ambient conditions

For the environmental limits for the safety functions and the drive, refer to the inverter unit hardware manual.

Related standards and directives

Standard	Name
IEC 61800-5-2:2016 EN 61800-5-2:2007	Adjustable speed electrical power drive systems - Part 5-2: Safety requirements – Functional

Standard	Name
IEC 62061:2021 EN 62061:2005 + AC:2010 + A1:2013 + A2:2015	Safety of machinery - Functional safety of safety-related electrical, electronic and programmable electronic control systems
EN ISO 13849-1:2015	Safety of machinery - Safety-related parts of control systems - Part 1: General principles for design
EN ISO 13849-2:2012	Safety of machinery - Safety-related parts of control systems - Part 2: Validation
IEC 61508-1:2010	Functional safety of electrical/electronic/programmable electronics safety related systems – Part 1: General requirements
IEC 61508-2:2010	Functional safety of electrical/electronic/programmable electronics safety related systems – Part 2: Requirements for electrical/electronic/programmable electronic safety-related systems
IEC 61511-1:2016 + A1:2017	Functional safety – Safety instrumented systems for the process industry sector – Part 1: Framework, definitions, system,hardware and application programming requirements
IEC 61000-6-7:2014	Electromagnetic compatibility (EMC) – Part 6-7: Generic standards – Immunity requirements for equipment intended to perform functions in a safety-related system (functional safety) in industrial locations
IEC 61326-3-1:2017	Electrical equipment for measurement, control and laboratory use – EMC requirements – Part 3-1: Immunity requirements for safety-related systems and for equipment intended to perform safety-related functions (functional safety) – General industrial applications
EN ISO 13850:2015	Safety of machinery – Emergency stop – Principles for design
2006/42/EC	European Machinery Directive
	Supply of Machinery (Safety) Regulations 2008 (UK)
Other	Machine-specific C-type standards

Compliance with the European Machinery Directive

The drive is an electronic product which is covered by the European Low Voltage Directive. However, the drive internal safety function of this manual is in the scope of the Machinery Directive as a safety component. This function complies with European harmonized standards such as IEC/EN 61800-5-2. The declaration of conformity is delivered with the drive.

Compliance with the Supply of Machinery (Safety) Regulations (UK)

The drive is an electronic product which is covered by the Electrical Equipment (Safety) Regulations. However, the drive internal safety function of this manual is in the scope of the Supply of Machinery (Safety) Regulations as a safety component. This function complies with designated standards such as EN 61800-5-2. The declaration of conformity is delivered with the drive.

Further information

Product and service inquiries

Address any inquiries about the product to your local ABB representative, quoting the type designation and serial number of the unit in question. A listing of ABB sales, support and service contacts can be found by navigating to www.abb.com/searchchannels.

Product training

For information on ABB product training, navigate to new.abb.com/service/training.

Providing feedback on ABB manuals

Your comments on our manuals are welcome. Navigate to new.abb.com/drives/manuals-feedback-form.

Document library on the Internet

You can find manuals and other product documents in PDF format on the Internet at www.abb.com/drives/documents.

a2 (frozen)
PDF-A4
Created 2022-04-22, 11:23:41

www.abb.com/drives

3AUA0000145933G

© Copyright 2022 ABB. All rights reserved.
Specifications subject to change without notice.

3AUA0000145933 Rev G (EN) 2022-04-22