ABB INDUSTRIAL DRIVES

ACS880-304...+A003 diode supply modules

Hardware manual

ACS880-304…+A003 diode supply modules

Hardware manual

Table of contents

4. Cabinet construction

5. Electrical installation

7. Start-up

3AUA0000102452 Rev G
EN
EFFECTIVE: 2020-03-18

Table of contents

1 Introduction to the manual

Contents of this chapter 13
Applicability 13
Safety instructions 13
Target audience 13
Categorization by frame size and option code 14
Use of component designations 14
Terms and abbreviations 14
Related documents 14

2 Operation principle and hardware description

Contents of this chapter 17
Operation principle 17
- Simplified main circuit diagram 18
- Overcurrent and short-circuit protection 18
- Temperature supervision 18

Overview diagrams 19
- Overview diagram of the drive system 19
- Overview diagram of the supply unit 20
  - Diode supply unit with frame D6D or D7D module 20
  - Diode supply unit with frame D8D module 21

Hardware of the supply modules 21
- Layout drawings of the supply modules 22
  - D6D supply module 22
  - D7D supply module 23
  - D8D supply module 24

Overview of control connections of ZCU-14 control unit 25
Supply unit control devices 26
- Auxiliary voltage switch 26
- Operating switch 26
- Emergency stop and emergency stop reset buttons 27
- ACX-AP-x control panel 27
- PC connection 27
- Fieldbus control 27

Type designation label 28
Type designation key 29

3 Moving and unpacking the module

Contents of this chapter 31
Moving and lifting the transport package 31
Unpacking 31
Lifting the modules 32
Moving the modules 32

4 Cabinet construction

Contents of this chapter 33
Limitation of liability 33
Switching, disconnecting and protecting solution 33
Frame sizes D6D and D7D 33
Frame sizes D8D 34
Cabinet configuration overview 34
ACS880-304…+A003 configurations in Rittal VX25 and generic enclosures 34
Example of the AC fuse cooling 35
Installation examples 36
D6D module in a 400 mm wide Rittal VX25 enclosure 37
Installation stages 38
Kits for D6D module in a 400 mm wide Rittal VX25 enclosure 39
Stage 1: Installation of common parts 40
Stage 2: Main switch-disconnector and main contactor installation 41
Stage 3: D6D/D7D module installation parts 42
Stage 4: AC busbar installation 43
Stage 5: Main circuit cabling 44
Stage 6: Control unit installation 45
Stage 7: Module installation 46
Stage 8: D6D shroud installation 47
D7D module in a 400 mm wide Rittal VX25 enclosure 48
Installation stages 49
Kits for D7D module in a 400 mm wide Rittal VX25 enclosure 50
Stage 1: Installation of common parts 51
Stage 2: Main switch-disconnector and main contactor installation 52
Stage 3: D6D/D7D module installation parts 53
Stage 4: AC busbar installation 54
Stage 5: Main circuit cabling 55
Stage 6: Control unit installation 56
Stage 7: Module installation 57
Stage 8: Shroud installation 58
D8D module in a 400 mm wide Rittal VX25 enclosure 59
Installation stages 60
Kits for D8D module in a 400 mm wide Rittal VX25 enclosure 61
Stage 1: Installation of common parts 62
Stage 2: D8D/D8T module installation parts 63
Stage 3: Quick connector installation 64
Stage 4: D8D DC busbar installation 65
Stage 5: D8D busbars to quick connector 66
Stage 6: D8D AC busbar installation 67
Stage 7: D8D module installation 68
Stage 8: D8D shroud installation 69

5 Electrical installation

Contents of this chapter 71
Safety and liability 71
Electrical safety precautions 72
General notes 73
Static electricity 73
Optical components 73

Measuring the insulation 73
Measuring the insulation of the drive 73
Measuring the insulation of the input power cable 73
Connecting the input power cables 74
Connection diagrams 74
D6D, D7D diode supply module 74
D8D diode supply module 74
Connection procedure of the input power cables (D6D/D7D supply modules) 75
Connection procedure of the input power cables (D8D supply modules) 78
Connecting power supply for the control unit 80
Connection diagram 80
Connection procedure 80
Connecting power supply for the module fan 81
Connection diagram 81
Connecting the control cables 81
Control cable connection procedure 81
Grounding the outer shields of the control cables at the cabinet entry 81
Routing the control cables inside the cabinet 83
Connecting control cabling 83
Connecting a PC 84

6 Installation checklist of the drive

Contents of this chapter 87
Checklist 87

7 Start-up

Contents of this chapter 89
Start-up procedure 90
Switching the supply unit off 91
Disconnecting and temporary grounding the drive 91

8 Maintenance

Contents of this chapter 93
Maintenance intervals 93
Cabinet 95
Cleaning the interior of the cabinet 95
Cleaning the door air inlets (IP22 and IP42) 95
Power connections 96
Retightening the power connections 96
Fuses 96
Checking and replacing the module DC fuses 96
Checking and replacing the AC fuses 97
Checking and replacing the CVAR board fuses 98
Fan 98
Replacing the fan of the supply module 99
Replacing the cabinet cooling fan 100
Supply module 100
Replacing the D6D and D7D supply module 101
Lifting device for the D6D and D7D supply modules 104
Replacing the D8D supply module 105
Module handling 105

Replacing the D8D supply module in the Rittal VX25 enclosure 105
Control panel 108
Cleaning the control panel 108
Replacing the control panel battery 108
Control unit 108
Replacing the memory unit 108
Replacing the ZCU-14 control unit battery 109
LEDs and other status indicators 110

9 Ordering information

Contents of this chapter 111
Kit code key 112
Frame D6D and D7D 113
Diode supply modules 113
Control panel 115
Control electronics 116
ZCU kit 116
Mechanical installation accessories and tools 116
Module installation parts 116
Main switch-disconnector and contactor mechanics kit 117
Shrouds 117
X6X/X7X lifting device 118
AC-side components 119
Main switch-disconnector kits 119
AC fuses 119
Main contactors 120
Varistor kit ACS880 for UL/CSA installations 121
AC busbars 122
DC-side components 122
DC bus installation parts (for Rittal VX25 enclosures) 122
Ventilation kits 123
Air inlet kits 400 mm cabinet 123
Air outlet kits 400 mm cabinet 124
Cooling fans 125
Miscellaneous 125
Plug connectors 125
Frame D8D 126
Diode supply modules 126
Control panel 127
Control electronics 128
ZCU kit 128
Mechanical installation accessories and tools 128
Module installation parts 128
Shrouds 129
Ramp 130
AC-side components 130
Bracket for Flat-PLS busbar holder (common AC) 130
Main switch-disconnector kits 130
AC fuses 131
Main contactors 131
Varistor kit ACS880 for UL/CSA installations 132
AC busbars 132

D8D AC busbars to quick connector 133
Quick connector 133
DC-side components 134
DC bus installation parts (for Rittal VX25 enclosures) 134
DC busbars 134
DC connection flanges 135
Ventilation kits 135
Air inlet kits 400 mm cabinet 135
Air outlet kits 400 mm cabinet 136
Miscellaneous 137
Plug connectors 137

10 Technical data

Contents of this chapter 139
Ratings 139
Derating 140
Surrounding air temperature derating 140
Altitude derating 140
Fuses 141
AC fuses 141
IEC 141
IEC/UL 142
UL 142
Internal DC fuses 143
Fuses on CVAR board 143
Dimensions and weights 143
Free space requirements 144
Allowable mounting orientations 144
Losses, cooling data and noise 145
Auxiliary current consumption 146
Tightening torques 146
Electrical connections 146
Mechanical connections 146
Insulation supports 146
Cable lugs 147
Typical power cable sizes 148
Electrical power network specification 150
DC connection data 150
Efficiency 150
Control unit connection data 150
Protection classes 150
Ambient conditions 151
Materials 152
Standards 152
Markings 152
Disclaimers 152
Generic disclaimer 152
Cybersecurity disclaimer 152

11 Control units of the drive

Contents of this chapter 153

General 153
ZCU-14 layout 154
ZCU-14 default I/O connection diagram 155
External power supply for the control unit (XPOW) 157
Safe torque off (XSTO) 157
FSO-xx safety functions module connection (X12) 157
Connector data 158
ZCU-1x ground isolation diagram 160

12 Dimension drawings

Contents of this chapter 161
Diode supply module (frame D6D) 162
Diode supply module (frame D7D) 163
Diode supply module (frame D8D) 164
Quick connector 166
Main switch-disconnectors 167
OS250D03 167
OS400J03 168
OS630D12 and OS600J12 169
OT1000E03, OT1250E03 and OT1200U03 170
Main switch-disconnector handles 171
OHB65J6, OHB145J12 171
OHB274J12 171
Auxiliary contact OA1G10 172
Main contactors 172
AF146-30-22B-13 172
AF460-30-22-70 173
AF750-30-22-70 174
AF1250-30-22-70 175
AC fuses 176
170M3814D, 170M3817D, 170M6809D, 170M6812D 176
170M6415 and 170M6419 177
DFJ-250 178
DFJ-500 178
KTU-700 179
6,9 URD 33 TT F 1100 and 6,9 URD 73 TT F 1600 180
ZCU-14 control unit 181
Support plate for ZCU-14 182
ACS-AP-x control panel with door mounting kit 183
Ramp 184
D6D/D7D cabinet cooling fan 186
CVAR board 187

13 Example circuit diagrams

Contents of this chapter 188
Component designations used in the diagrams 188
D8D circuit diagrams 188
Differences of the DSU DxD circuit diagrams 188
Frames D6D and D7D – Main supply, auxiliary voltage transformer, DSU module (sheet 001) 188
Frame D6D – Auxiliary voltage distribution (sheet 020) 189

Frames D7D – Auxiliary voltage distribution (sheet 020) 190
Frames D6D and D7D – ZCU-14 control unit, control panel (sheet 050) 191
Frame D8D – Main supply, auxiliary voltage transformer, DSU module (sheet 001) 192
Frame D8D – Auxiliary voltage distribution (sheet 020) 193
Frame D8D – ZCU-14 control unit, control panel (sheet 050) 194
Frame D8D – Emergency stop safety circuit (sheet 060) 195

Further information

1

Introduction to the manual

Contents of this chapter

This chapter gives basic information on the manual.

Applicability

The manual is applicable to the ACS880-304…+A003 diode supply modules.

Safety instructions

Obey all safety instructions delivered with the drive.

- Read the **complete safety instructions** before you install, commission, use or service the drive. The complete safety instructions are given in *ACS880 multidrive cabinets and modules safety instructions* (3AUA0000102301 [English]).
- Read the **software-function-specific warnings and notes** before changing the default settings of a function. For each function, the warnings and notes are given in the section describing the related user-adjustable parameters.
- Read the **task-specific safety instructions** before starting the task. See the section describing the task.

Target audience

This manual is intended for people who plan the installation, install, start up and do maintenance work on the drive, or create instructions for the end user of the drive concerning the installation and maintenance of the drive.

Read the manual before working on the drive. You are expected to know the fundamentals of electricity, wiring, electrical components and electrical schematic symbols.

Categorization by frame size and option code

The information which concerns only certain supply module frame sizes is marked with the frame size identifier. The frame sizes of the diode supply modules are D6D, D7D and D8D.

The module size can be identified from the basic code visible on the type designation label, for example, ACS880-304-0070A-5+A003 where 0070A is the module size. The option codes of the module are listed after the plus sign. The codes are listed in section *Type designation key (page 29)*.

Use of component designations

Some device names in the manual include the item designation in brackets, for example [Q20], to make it possible to identify the components in the circuit diagrams of the drive.

Terms and abbreviations

Term	Description
Control board	Circuit board in which the control program runs
Control unit	Control board built in a housing (often rail-mountable)
Cubicle	One section of a cabinet-installed drive. A cubicle is typically behind a door of its own.
CVAR	Varistor board
DC link	DC circuit between rectifier and inverter
DI	Digital input
Diode supply module	Diode rectifier and related components enclosed in a metal frame or enclosure. Intended for cabinet installation.
Diode supply unit	Diode supply modules under control of one control board, and related components.
Drive	Frequency converter for controlling AC motors
DSU	Diode supply unit
Flat-PLS	Rittal Flat-PLS, a busbar system for standard, commercially available flat busbars
Frame, frame size	Physical size of the drive or power module
Intermediate circuit	DC circuit between rectifier and inverter
Inverter	Converts direct current and voltage to alternating current and voltage.
Inverter module	Inverter bridge, related components and drive DC link capacitors enclosed in a metal frame or enclosure. Intended for cabinet installation.
Multidrive	Drive for controlling several motors which are typically coupled to the same machinery. Includes one supply unit, and one or several inverter units.
Parameter	In the drive control program, user-adjustable operation instruction to the drive, or signal measured or calculated by the drive. In some (for example fieldbus) contexts, a value that can be accessed as an object, eg, variable, constant, or signal.
Rectifier	Converts alternating current and voltage to direct current and voltage
Single drive	Drive for controlling one motor
VX25	Enclosure system by Rittal (www.rittal.com)
ZCU	Type of control unit

Related documents

Manual	Code
General manuals	
ACS880 multidrive cabinets and modules safety instructions	3AUA0000102301
ACS880 multidrive cabinets and modules electrical planning instructions	3AUA0000102324

Manual	**Code**
Drive modules cabinet design and construction instructions	3AUA0000107668
Supply module manuals	
ACS880-204 IGBT supply modules hardware manual	3AUA0000131525
ACS880 IGBT supply control program firmware manual	3AUA0000131562
ACS880-304…+A003 diode supply modules hardware manual	3AUA0000102452
ACS880-304…+A018 diode supply modules hardware manual	3AXD50000010104
ACS880 diode supply control program firmware manual	3AUA0000103295
ACS880-904 regenerative rectifier modules hardware manual	3AXD50000020457
ACS880 regenerative rectifier control program firmware manual	3AXD50000020827
Inverter module manuals and guides	
ACS880-104 inverter modules hardware manual	3AUA0000104271
ACS880 primary control program firmware manual	3AUA0000085967
ACS880 primary control program quick start-up guide	3AUA0000098062
Brake module and DC/DC converter module manuals	
ACS880-604 1-phase brake chopper modules hardware manual	3AUA0000106244
ACS880-604 3-phase brake modules hardware manual	3AXD50000022033
ACS880 (3-phase) brake control program firmware manual	3AXD50000020967
ACS880-1604 DC/DC converter modules hardware manual	3AXD50000023642
ACS880 DC/DC converter control program firmware manual	3AXD50000024671
Module package hardware manuals	
ACS880-04 single drive module packages (560 to 2200 kW) hardware manual	3AUA0000138495
ACS880-14 and -34 single drive module packages hardware manual	3AXD50000022021
Option manuals	
ACX-AP-x assistant control panels user's manual	3AUA0000085685
BAMU-12C auxiliary measurement unit hardware manual	3AXD50000117840
Drive composer start-up and maintenance PC tool user's manual	3AUA0000094606
Drive application programming (IEC 61131-3) manual	3AUA0000127808
Converter module lifting device for drive cabinets hardware manual	3AXD50000210268
Installation frames for ACS880 multidrive modules hardware manual	3AXD50000010531
Manuals and quick guides for I/O extension modules, fieldbus adapters, safety functions modules, etc.	

See www.abb.com/drives/documents for all manuals on the Internet.

You can find all documentation related to the multidrive modules on the Internet at https://sites-apps.abb.com/sites/lvacdrivesengineeringsupport/content.

2

Operation principle and hardware description

Contents of this chapter

This chapter contains a description of the diode supply unit. The information is valid for the units with ACS880-304…+A003 diode supply modules.

Operation principle

The diode supply module uses a six-pulse diode bridge to rectify three-phase alternating current to direct current for the DC bus of the drive. The DC bus supplies electrical power to the inverters, which control the motors. There can be one inverter unit (single drives) or several inverter units (multidrives) connected to the intermediate circuit. The AC choke smoothens the current waveform in the power supply network and voltage in the DC link of the drive.

The rectifier bridge in the ACS880-304…+A003 diode supply module is uncontrolled: it cannot control the DC link voltage and limit the charging current of the DC link capacitors at the power up. Thus you can only use the bridge with inverters that have internal charging circuits, or you must equip the supply unit with a separate, external charging circuit. The control program allows the use of an external charging circuit, but ABB does not offer components for its connection. ABB inverters with frame sizes R1…R4i have internal charging circuits as standard. An internal charging circuit is available for frames R6i…R7i as an option (+F272).

ABB also offers a half-controlled diode bridge. See *ACS880-304…+A018 diode supply modules hardware manual* (3AXD50000010104 [English]).

Simplified main circuit diagram

The following figure shows the simplified main circuit diagram of the rectifier.

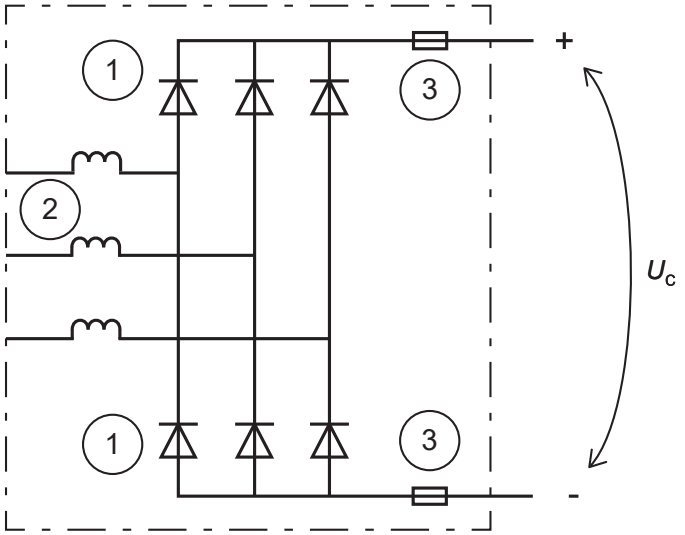

1	Diodes
2	AC choke
3	DC fuses

Overcurrent and short-circuit protection

The main circuit of the supply unit is equipped with AC and DC fuses. The fuses protect the unit against overcurrent and short-circuits.

Temperature supervision

Thermal switch(es) supervise the temperature inside the diode supply module. Wire the switch to a digital input (DI) of the ZCU control unit (1 = OK, 0 = overtemperature). In case of overtemperature, the switch opens and the control program generates first a warning, and then, if the overtemperature indication remains over a predefined delay, trips the supply unit on a fault. You can adjust the delay time with parameters.

A temperature sensor integrated into the ZCU control unit supervises the board operating temperature. In case of overtemperature, the control program generates a warning or trips the supply unit on a fault.

Overview diagrams

Overview diagram of the drive system

The following figure shows a simplified diagram of a common DC bus drive system. More details of the diode supply unit are shown in the module-specific single-line diagrams in section *Overview diagram of the supply unit (page 20)*.

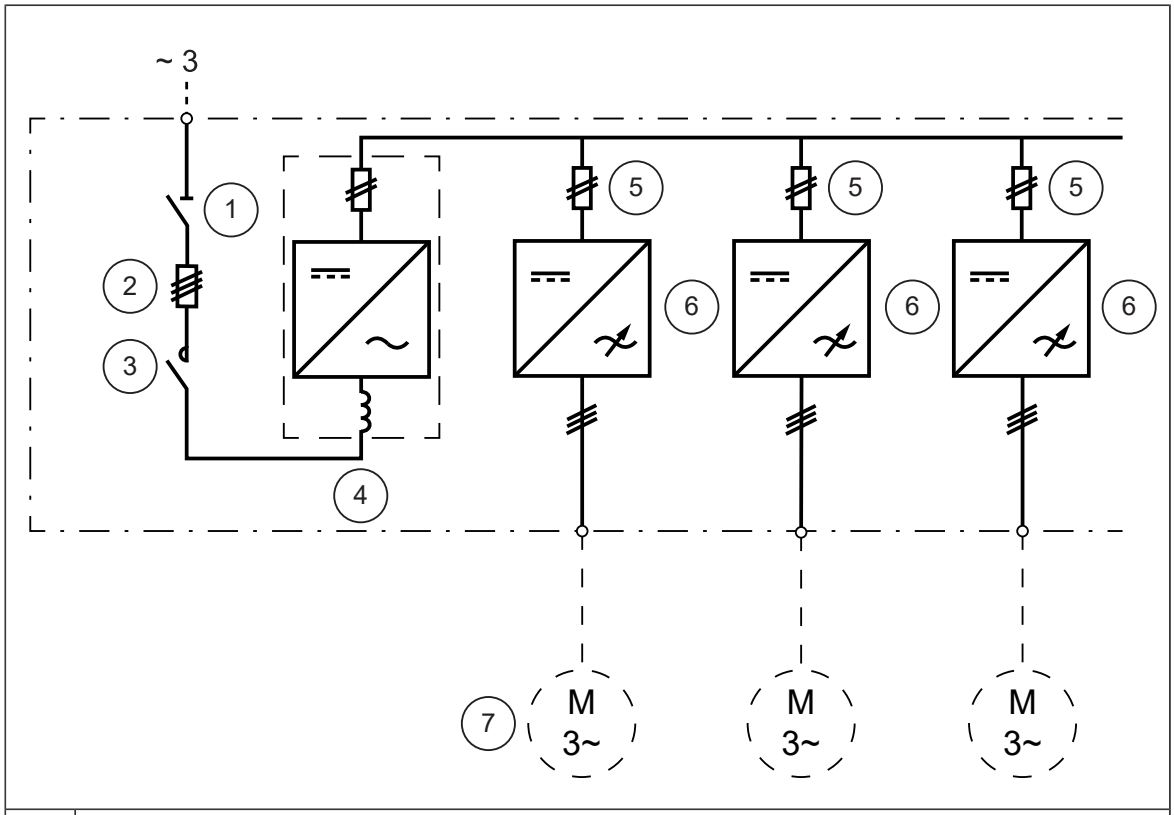

1	Main switch-disconnector [Q1]
2	AC fuses
3	Main contactor [Q2]
4	Supply module [T01] (including choke, rectifier and DC fuses)
5	Inverter DC fuses
6	Inverter modules [T11…]
7	Motors

Overview diagram of the supply unit

The following figures are examples of possible diode supply unit configurations.

Diode supply unit with frame D6D or D7D module

The following figure shows a connection example of a supply unit with a D6D or D7D module.

The table gives explanations for the numbers and letters used in the diagram. It also indicates if the components can be ordered from ABB or if they must be acquired separately by the customer.

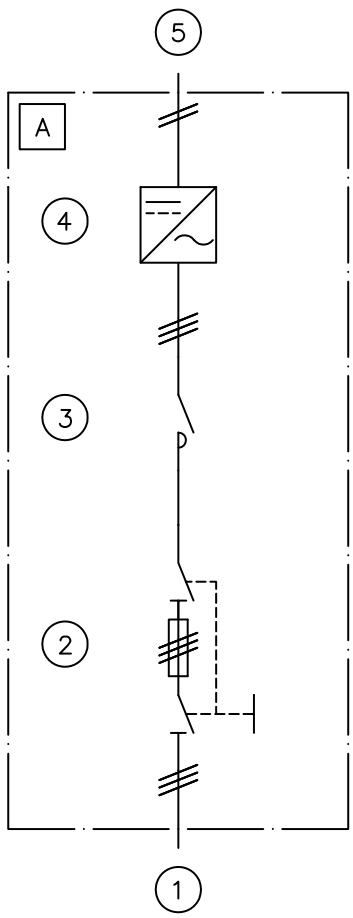

A	Diode supply unit cubicle (DSU)
1	AC supply network
2	Main switch-disconnector [Q1] 1)
3	Main contactor [Q2] 1)
4	Diode supply module [T01] 2)
5	DC link

1) Available from ABB or third party.
2) Available from ABB.

Diode supply unit with frame D8D module

The following figure shows a connection example of a supply unit with a D8D module.

The table gives explanations for the numbers and letters used in the diagram. It also indicates if the components can be ordered from ABB or if they must be acquired separately by the customer.

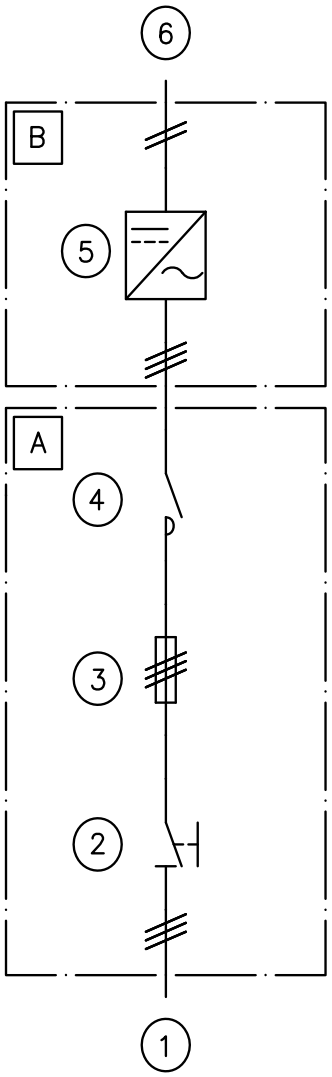

A	Incoming cubicle
B	Diode supply unit cubicle
1	AC supply network
2	Main switch-disconnector [Q1] 1)
3	Fuse 1)
4	Main contactor [Q2] 1)
5	Diode supply module [T01] 2)
6	DC link

1) Available from ABB or third party.
2) Available from ABB.

Hardware of the supply modules

The D6D and D7D modules can be moved with the aid of a lifting device. The D8D modules have wheels and a quick connector for the AC supply for easy removal and installation. All modules have a direct-on-line cooling fan (option +C188) as standard.

The D6D and D7D modules are cULus listed and CSA certified as standard. For D8D modules, UL/CSA approval is optional (options +C129 and +C134).

Layout drawings of the supply modules

D6D supply module

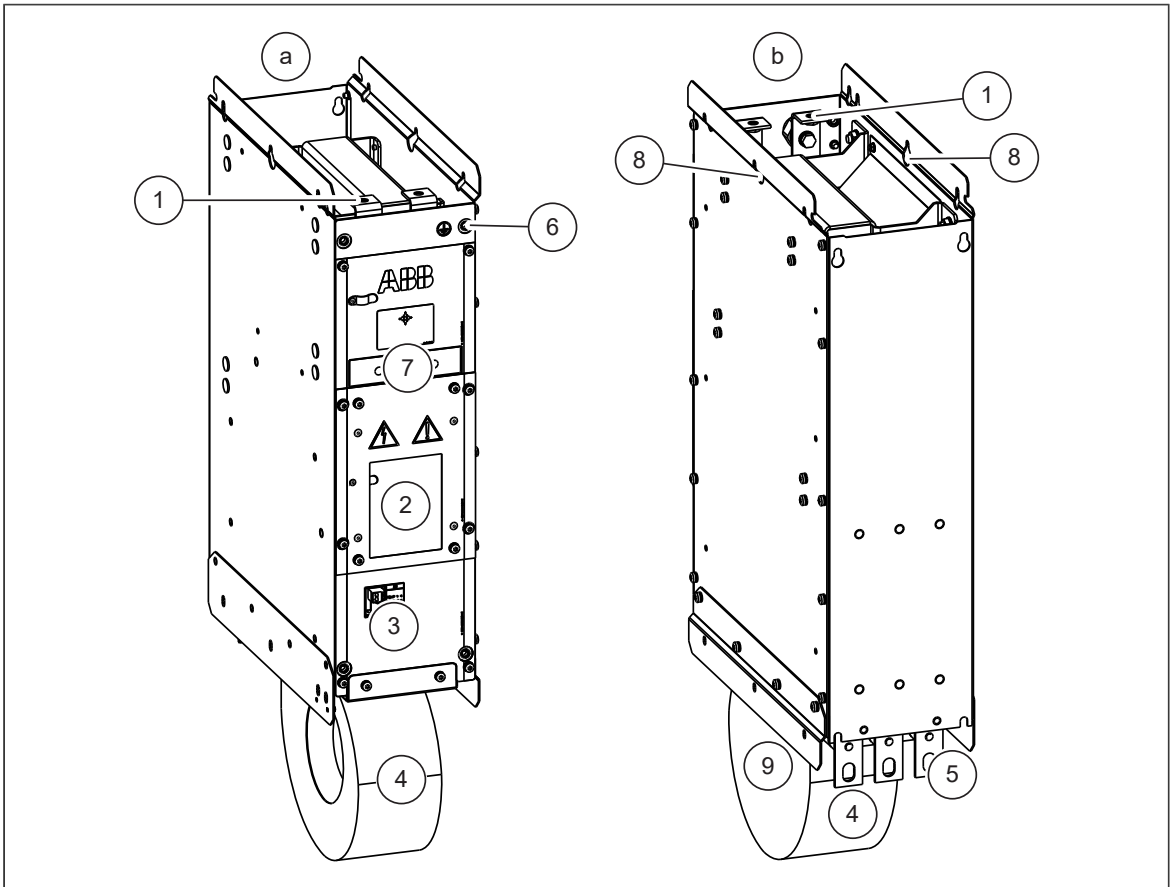

a	DSU module, frame size D6D, front
b	DSU module, frame size D6D, back
1	DC output busbars
2	Cover panel of the module's DC fuses
3	Connector for temperature protection circuit [X1]
4	Fan
5	AC input busbars
6	Unpainted fastening hole. The grounding point [PE] between module frame and cabinet frame.
7	Type designation label of the module
8	Lifting hole
9	Connector for fan power supply [X7]

Connectors X1 and X7

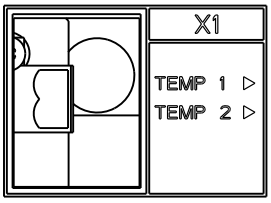

Connector X1		
1	Temperature protection circuit	
2		
Connector X7		
1	L	Direct-on-line fan power supply
2	N	
3	Not in use.	
4	PE	

D7D supply module

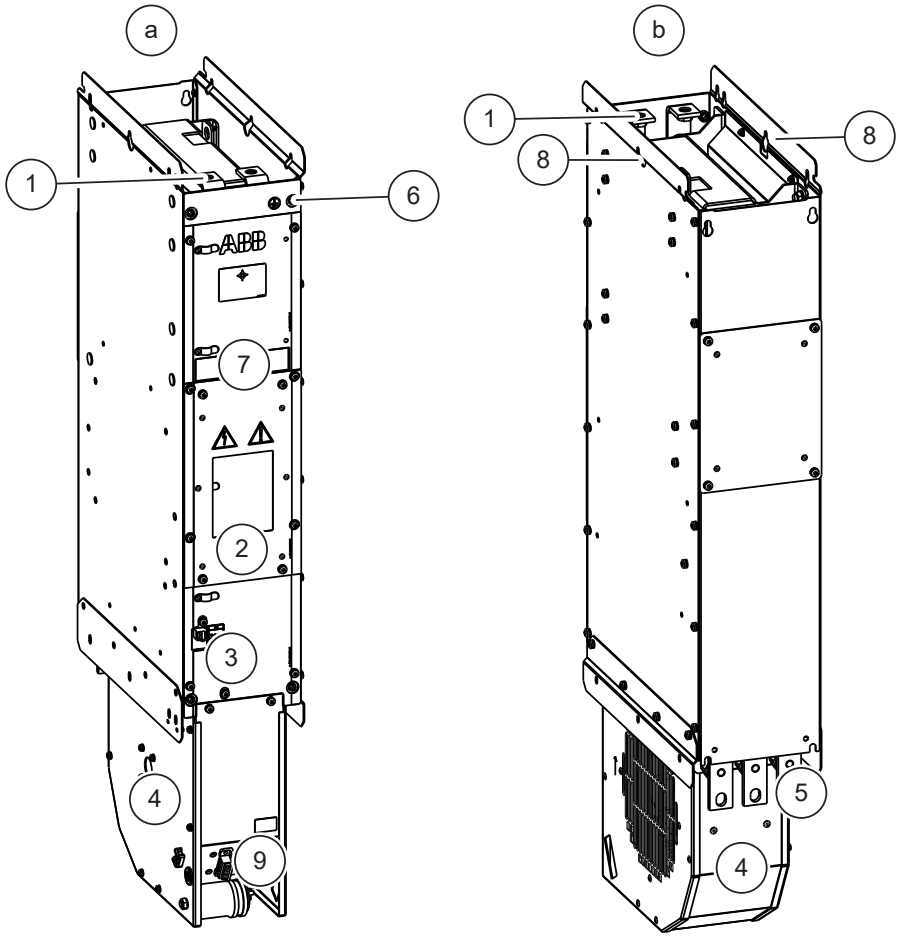

a	DSU module, frame size D7D, front
b	DSU module, frame size D7D, back
1	DC output busbars
2	Cover panel of the module's DC fuses
3	Connector for temperature protection circuit [X1]
4	Fan
5	AC input busbars
6	Unpainted fastening hole. The grounding point [PE] between module frame and cabinet frame.

7	Type designation label of the module
8	Lifting hole
9	Connector for fan power supply [X7]

Connectors X1 and X7

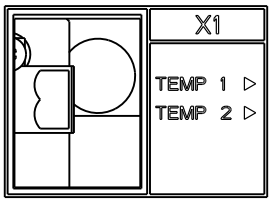

Connector X1		
1	Temperature protection circuit	
2		
Connector X7		
1	L	Direct-on-line fan power supply
2	N	
3	Not in use.	
4	PE	

D8D supply module

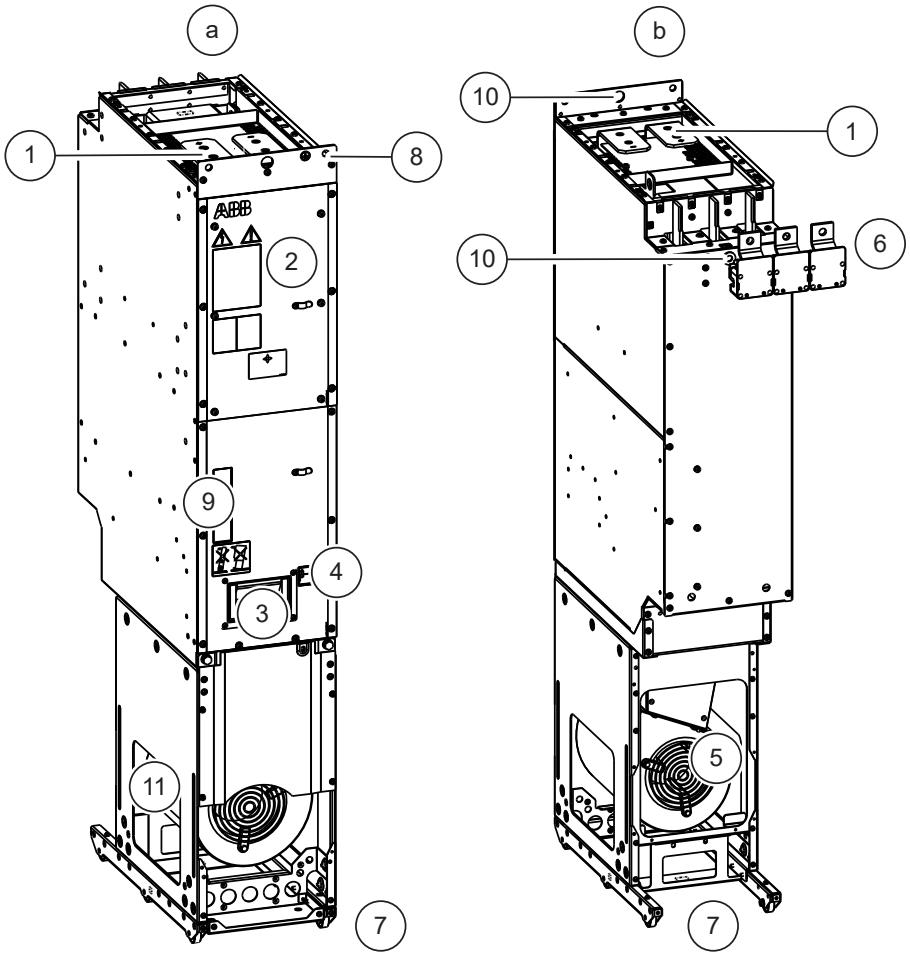

a	DSU module, frame size D8D, front
b	DSU module, frame size D8D, back
1	DC output busbars
2	Cover panel of the module’s DC fuses

3	Handle
4	Connector for temperature protection circuit [X1]
5	Fan
6	Quick connector (AC input)
7	Wheels
8	Unpainted fastening hole. The grounding point [PE] between module frame and cabinet frame.
9	Type designation label of the module
10	Lifting hole
11	Connector for fan power supply [X7]

Connectors X1 and X7

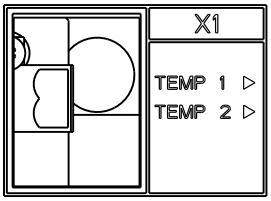

Connector X1		
1	Temperature protection circuit	
2		
Connector X7		
1	N	Direct-on-line fan power supply
2	Not in use.	
3		
4	PE	
5	Not in use.	
6	L	Direct-on-line fan power supply
7	Not in use.	
8		

Overview of control connections of ZCU-14 control unit

It is possible to:

- control the unit through the control panel and fieldbus
- read the status information of the supply unit through the control panel, fieldbus and relay output.
- stop the unit with an externally wired emergency stop button (if the unit is equipped with an emergency stop option).

The diagram shows the control connections and interfaces of the ZCU control unit.

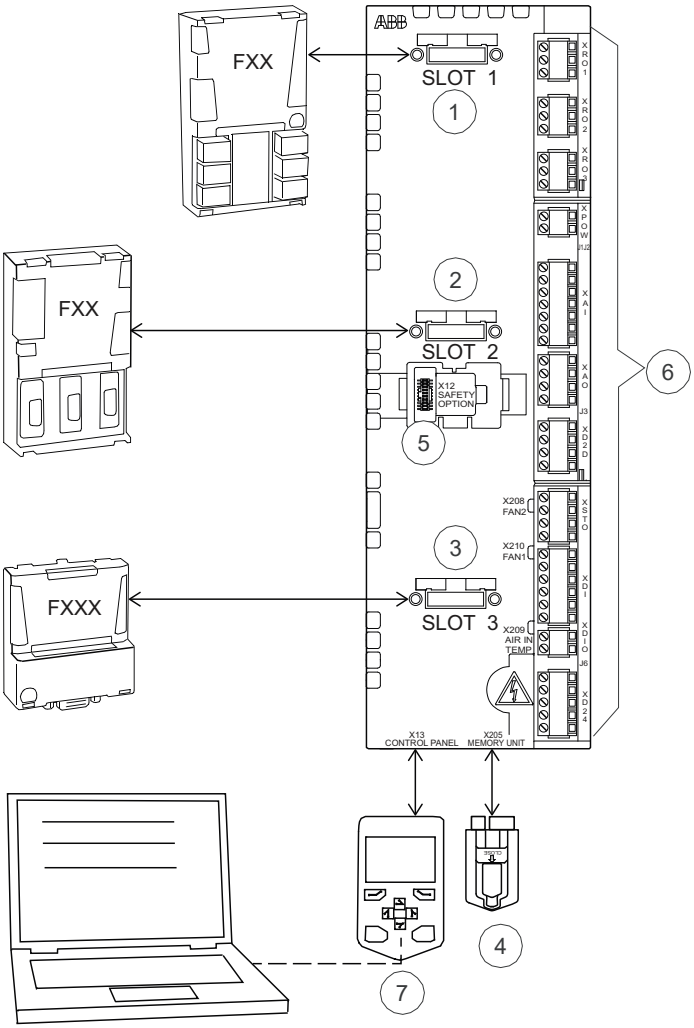

1 2 3	Analog and digital I/O extension modules and fieldbus communication modules can be inserted into slots 1, 2 and 3.
4	Memory unit
5	Not in use in supply modules
6	Terminal blocks
7	Control panel

Supply unit control devices

Auxiliary voltage switch

You can equip the unit with an auxiliary voltage switch [Q21]. Using the switch, you can disconnect the auxiliary circuit from the power line.

Operating switch

You can equip the supply unit with the two-position operating switch [S21]. Connect the switch to Run/Enable digital input of the control unit.

By default, the operating switch controls the unit as follows:

- The Run/Enable position: The control program receives the Run/Enable command through the digital input DI2. The control program closes the main contactor [Q2] or main breaker with relay output RO3. The module starts rectifying and charging the DC link of the drive.
- The Off position: The control program does not receive the Run/Enable command through the digital input. The program opens the main contactor [Q2] or main breaker with the relay output and the module stops rectifying.

For more information on the on/off control logic, see *ACS880 diode supply control program firmware manual* (3AUA0000103295 [English]).

Emergency stop and emergency stop reset buttons

The cabinet can be equipped with an emergency stop button [S61] and an emergency stop reset button [S62]. Pressing the emergency stop button activates the emergency stop function of the supply unit. The button locks to open position automatically. You must release the button before you can return to the normal operation. Before the restart, you also need to reset the emergency stop circuit with the reset button.

Note: The customer is fully responsible for implementing and testing the functional safety circuits according to the relevant legislation and acceptance testing regulations. The functional safety option manuals give examples on implementing the safety circuits in ACS880 multidrives.

ACX-AP-x control panel

The ACX-AP-x control panel is the user interface of the unit. With the control panel, you can:

- start and stop the unit
- view and reset the fault and warning messages, and view the fault history
- view actual signals
- change parameter settings
- change between local and external control.

To be able to start and stop the unit by the control panel, you must have the parameter-defined Run enable signal and Start enable signal on (1). The control panel must also be in local control mode.

To change between local and remote control mode, press the Loc/Rem key of the control panel. For the instructions on the use of the panel, see *ACX-AP-x Assistant control panels user's manual* (3AUA0000085685 [English]). For the parameter settings, see the firmware manual.

PC connection

There is a USB connector on the front of the control panel that can be used to connect a PC to the drive. When a PC is connected to the control panel, the control panel keypad is disabled.

Fieldbus control

You can control the unit through a fieldbus interface if the unit is equipped with an optional fieldbus adapter and when you have configured the control program for the fieldbus control with the parameters. For information on the parameters, see the firmware manual.

Note: To be able to switch the main contactor [Q2] and the supply unit on and off (Run enable signal) through the fieldbus, the Run enable command at digital input DI2 must be on (1).

Type designation label

The type designation label of a module is attached to the module. For the location of the label, see section

- *D6D supply module (page 22)*
- *D7D supply module (page 23)*
- *D8D supply module (page 24)*.

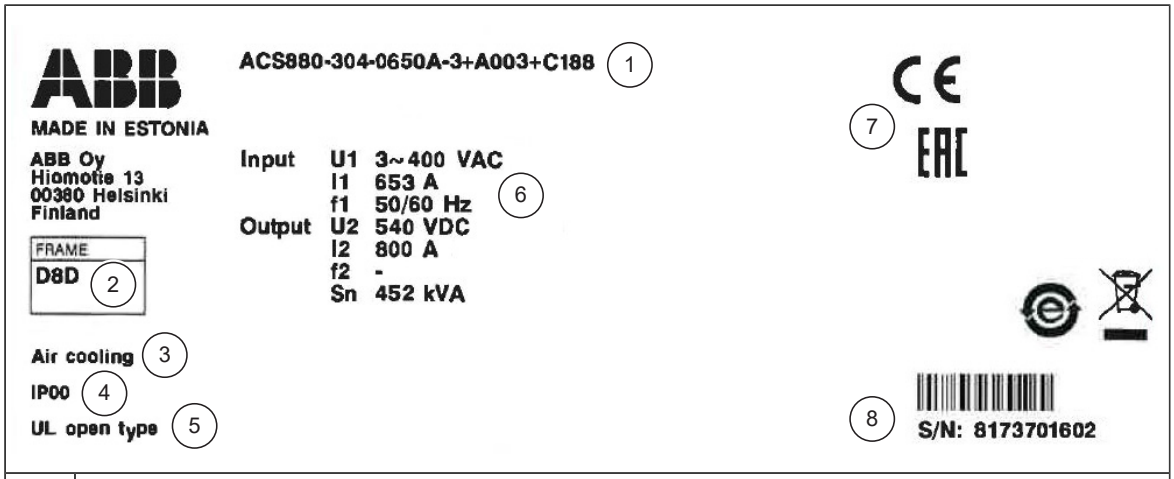

1	Type designation. See section *Type designation key (page 29)*.
2	Frame size
3	Cooling method and additional information
4	Degree of protection
5	UL/CSA data. See the technical data.
6	Ratings. See the technical data.
7	Valid markings. See *ACS880 multidrive cabinets and modules electrical planning instructions* (3AUA0000102324 [English]).
8	Serial number. The first digit of the serial number refers to the manufacturing plant. The next four digits refer to the unit's manufacturing year and week, respectively. The remaining digits complete the serial number so that there are no two units with the same number.

Type designation key

Type designation describes the composition of the module in short. The type designation is visible on the label (sticker) which is attached to the module. The complete designation code is divided in subcodes:

- The first 1…18 digits form the basic code. It describes the basic construction of the module. The fields in the basic code are separated by hyphens.
- The option codes follow the basic code. Each option code starts with an identifying letter (common for the whole product series), followed by descriptive digits. The option codes are separated by plus signs.

The subcodes are described below. An example type code: ACS880-304-0980A-5+A003.

Code	Description
Basic codes	
ACS880	Product series
304	Diode supply module for cabinet installation
Size	
xxxxA	Refer to the ratings table in the technical data.
Voltage range	
3	Input voltage range: 3~ 380 … 415 V AC. This is indicated in the type designation label as typical input voltage level (3~ 400 V AC).
5	Input voltage range: 3~ 380 … 500 V AC. This is indicated in the type designation label as typical input voltage level (3~ 400/480/500 V AC).
Option codes (plus codes)	
A003	Uncontrolled diode-diode bridge (as standard)
C129	cULus listed (frame D8D, always with +C134)
C134	CSA certified (frame D8D, always with +C129)
C188	Direct-on-line cooling fan (as standard)

3

Moving and unpacking the module

Contents of this chapter

This chapter gives basic information on moving, unpacking and lifting the modules.

WARNING!
Obey the safety instructions of the drive. If you ignore them, injury or death, or damage to the equipment can occur.

Moving and lifting the transport package

Move the transport package by a pallet truck or lift. Lift the transport package in a horizontal position. Use soft lifting slings.

Unpacking

The module is delivered on a wooden base, boxed in corrugated cardboard. The cardboard box is tied to the base with PET bands.

1. Cut off the bands.
2. Lift off the cardboard box.
3. Remove any filling material.
4. Cut open the plastic wrapping of the module.
5. Lift off the module.
6. Check that there are no signs of damage.

Dispose of or recycle the packaging according to the local regulations.

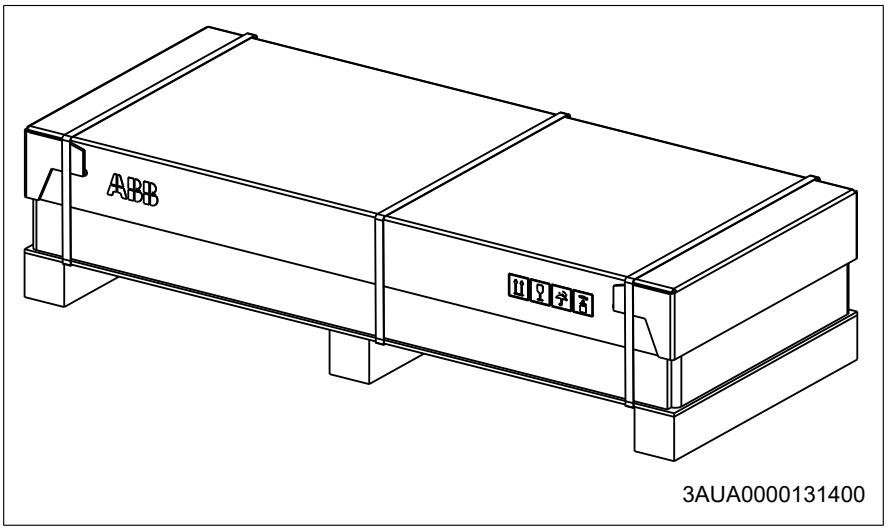

Lifting the modules

Lift the unpacked module only by its lifting eyes.

The D6D and D7D supply modules are heavy. You can order a device for lifting the D6D and D7D modules for the Rittal VX25 enclosure from ABB. For information on the device, see ordering information.

The D8D module runs on wheels and is heavy. Use extreme caution when moving the module. For more information on lifting and moving the D8D module, see module replacement instructions in the maintenance chapter.

Moving the modules

WARNING!
For general safety instructions for moving the module, see *ACS880 multidrive cabinets and modules safety instructions* (3AUA0000102301 [English]).

4

Cabinet construction

Contents of this chapter

This chapter instructs in placing the modules and additional equipment into a cabinet.

For general instructions, see *Drive modules cabinet design and construction instructions* (3AUA0000107668 [English]).

Limitation of liability

The installation must always be designed and made according to applicable local laws and regulations. ABB does not assume any liability whatsoever for any installation which breaches the local laws and/or other regulations. Furthermore, if the recommendations given by ABB are not followed, the drive may experience problems that the warranty does not cover.

Switching, disconnecting and protecting solution

To arrange the switching, disconnection and protection of the ACS880-304…+A003 unit, you can use the following solutions depending on the frame size.

Frame sizes D6D and D7D

The switching, disconnecting and protecting equipment can be placed inside the drive cabinet in the following way:

1. The AC supply coming to the drive cabinet is first connected to a main switch-disconnector [Q1] containing AC fuses.
2. The drive is equipped with a contactor connected between the main switch-disconnector [Q1] and the DSU module.

See the connection diagram of the *D6D, D7D diode supply module (page 74)*.

Frame sizes D8D

The switching, disconnecting and protecting equipment can be placed **outside** the drive cabinet in the following way:

1. The AC supply is first connected to a main switch-disconnector [Q1].
2. The AC fuses are connected after the switch-disconnector.
3. The main contactor [Q2] is connected between the AC fuses and the DSU module.

See the connection diagram of the *D8D diode supply module (page 74)*.

Cabinet configuration overview

ACS880-304…+A003 configurations in Rittal VX25 and generic enclosures

The following figures show all possible ACS880-304…+A003 configurations that can be installed in the Rittal VX25 and generic enclosures.

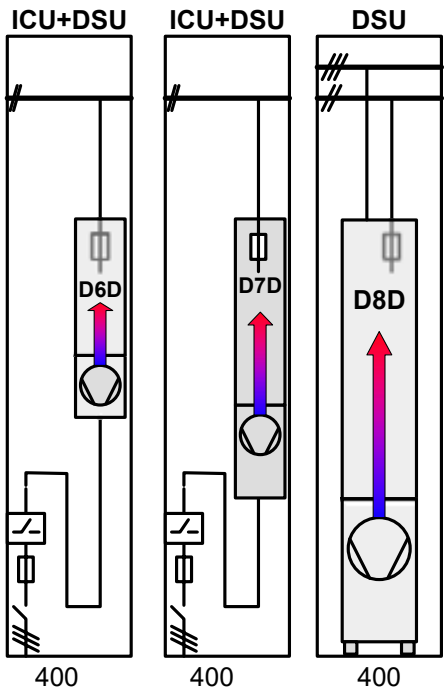

ICU	Incoming unit, customer-specific
DSU	Diode supply unit

Example of the AC fuse cooling

The AC fuses must be cooled by forced cooling. If the fuses are not located in the same cubicle with the supply/rectifier module, the module cooling fan does not supply the cooling air for the fuses but you must use a separate cooling fan.

The following figures show an example of the cooling system using a thermal switch for the air temperature monitoring near the AC fuses.

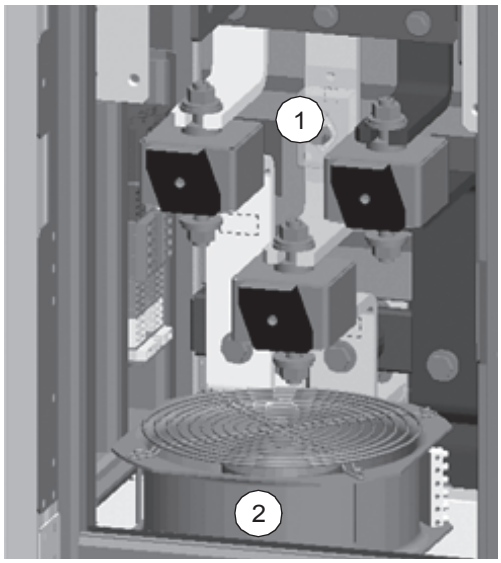

	Description
1	Thermal switch
2	Cooling fan

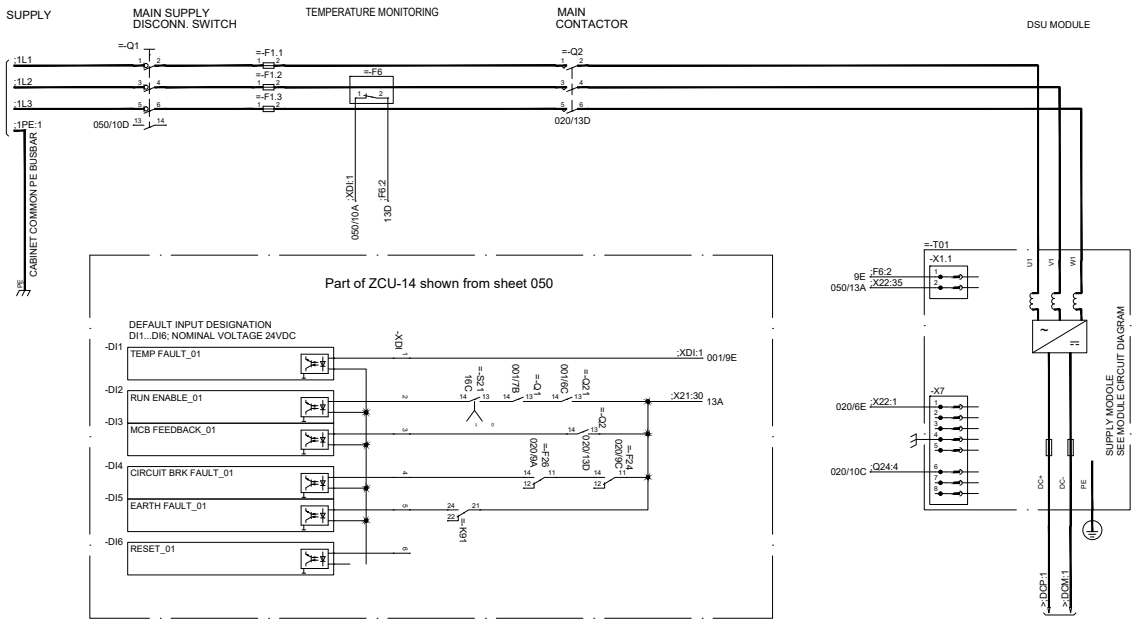

Note: The connection of temperature monitoring requires proper insulation between busbars and thermal switch.

Installation examples

WARNING!
The code labels attached to mechanical parts such as busbars, shrouds and sheet metal parts must be removed before installation as they may cause bad electrical connections, or, after peeling off and collecting dust in time, cause arcing or block the cooling air flow.

This section instructs in placing the modules and additional equipment into a user-defined cabinet.

Each example includes a table that lists:

- installation stages of different equipment in the order in which the installation into the cabinet should be performed
- code of the step-by-step instructions
- equipment kit code
- kit ordering code.

You can find the kit-specific assembly drawings, step-by-step instructions and kit information on the Internet. Go to https://sites-apps.abb.com/sites/lvacdrivesengineeringsupport/content. If needed, contact your local ABB representative.

The example includes also cabinet assembly drawings that show each stage listed in the table. More detailed steps of each stage are described in the kit-specific assembly drawings.

For general instructions, see *Drive modules cabinet design and construction instructions* (3AUA0000107668 [English]).

D6D module in a 400 mm wide Rittal VX25 enclosure

The following figure shows an example of the D6D module in the Rittal VX25 enclosure. The power cables are routed to the enclosure through the bottom.

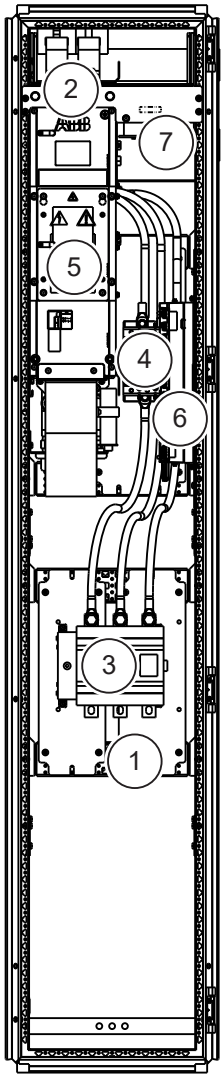

1	AC input
2	DC output
3	Main switch-disconnector [Q1] (with fuses)
4	Main contactor [Q2]
5	Diode supply module [T01]
6	Control unit [A51] **Note:** The control unit of DxD modules is a separate unit and it is always installed in the cabinet, NOT in the module itself or on the module.
7	Cabinet cooling fan [G24]

Installation stages

#	Installation stage	Instruction code	Kit code	Kit ordering code
1.	Installation of common parts:			
	• Baying parts	3AXD50000336340	-	-
	• PE busbar [PE]	3AXD50000336104	-	-
	• Divider panel	3AXD50000336692	-	-
	• Common DC Flat-PLS bracket	3AXD50000333639	A-468-X-001-VX	3AXD50000333387
2.	Main switch-disconnector [Q1] and main contactor [Q2] installation.	3AXD50000521104	-	-
3.	D6D/D7D module installation parts	3AXD50000520282	A-4-67-301-VX	3AXD50000510832
4.	D6D/D7D module AC input connection busbars	3AXD50000520374	A-4-67-101-VX	3AXD50000510849
6.	Main circuit cabling	3AXD50000522279	-	-
7.	Control unit installation	-	-	-
8.	Module installation	-	-	-
9.	D6D shroud installation	3AXD50000516551	A-4-6-352-VX	3AXD50000510856

Kits for D6D module in a 400 mm wide Rittal VX25 enclosure

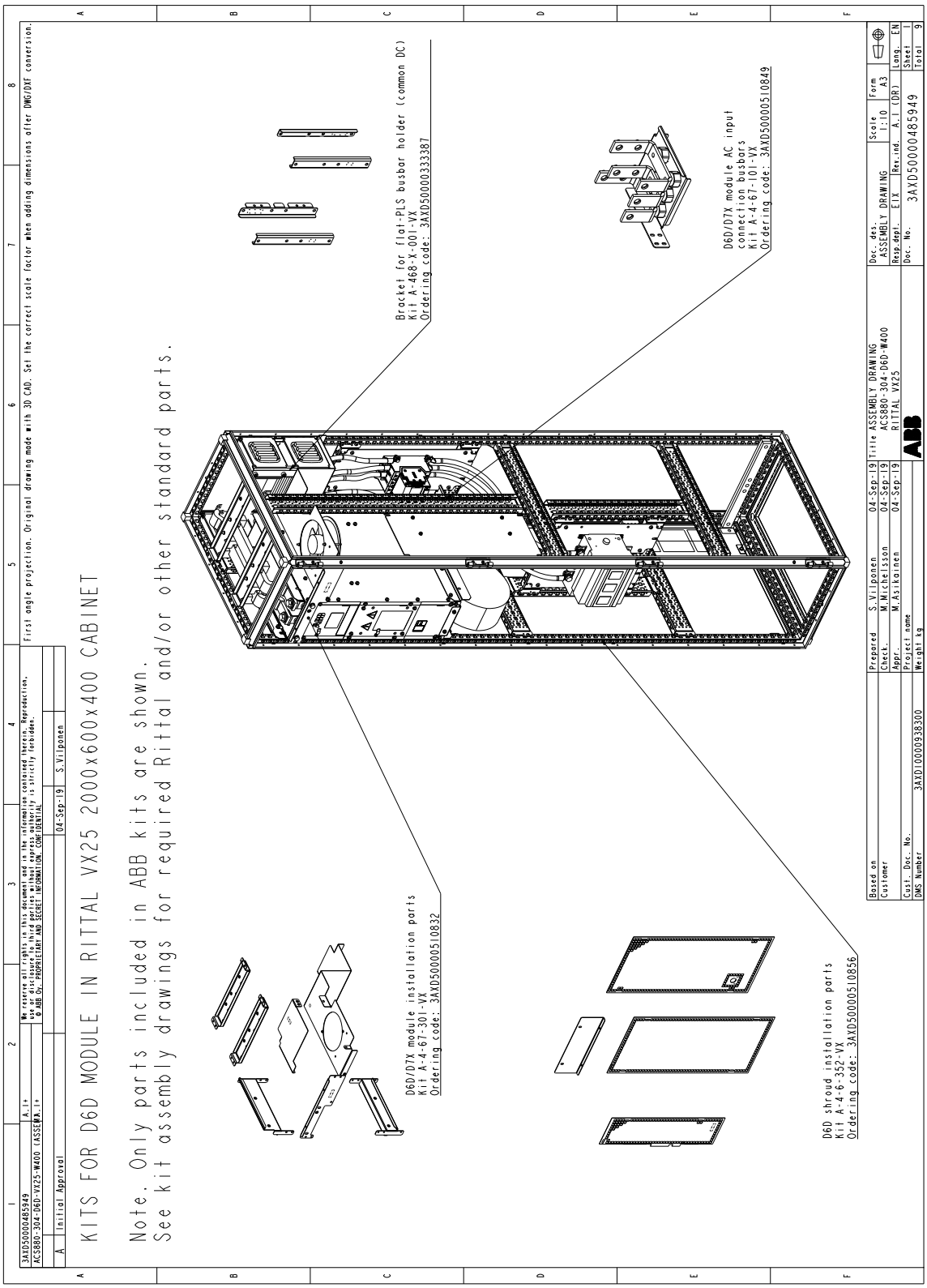

Stage 1: Installation of common parts

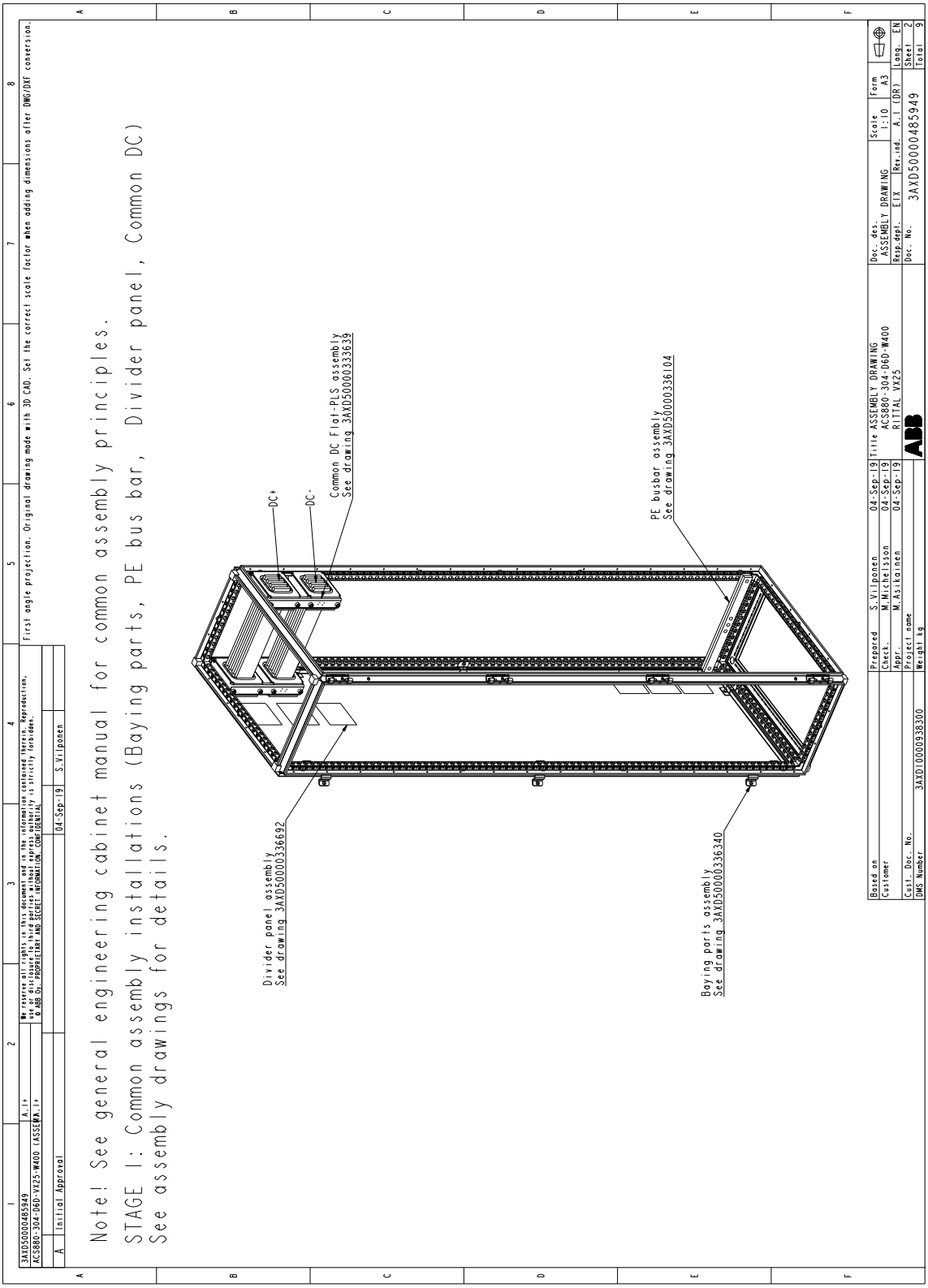

Stage 2: Main switch-disconnector and main contactor installation

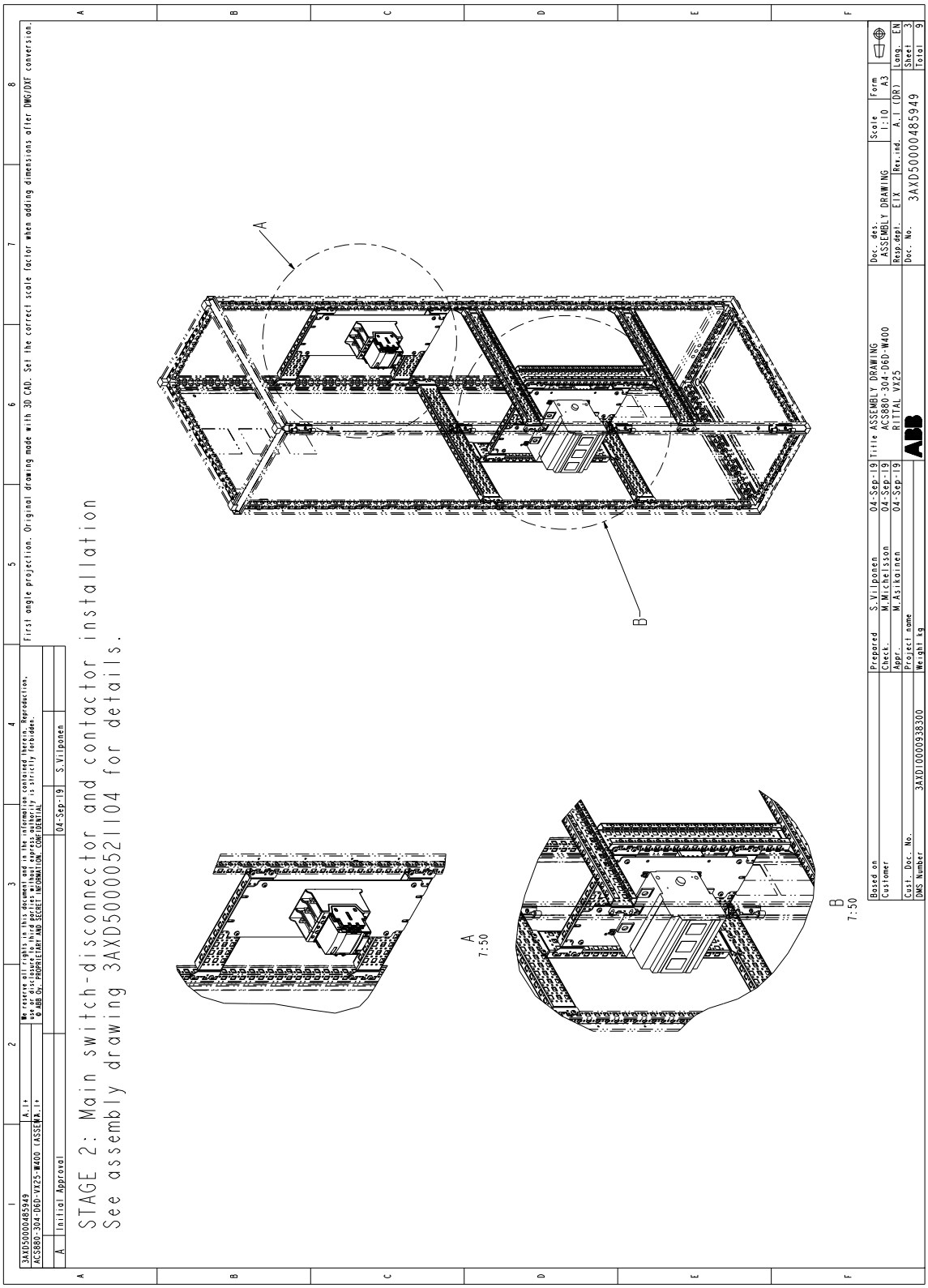

Stage 3: D6D/D7D module installation parts

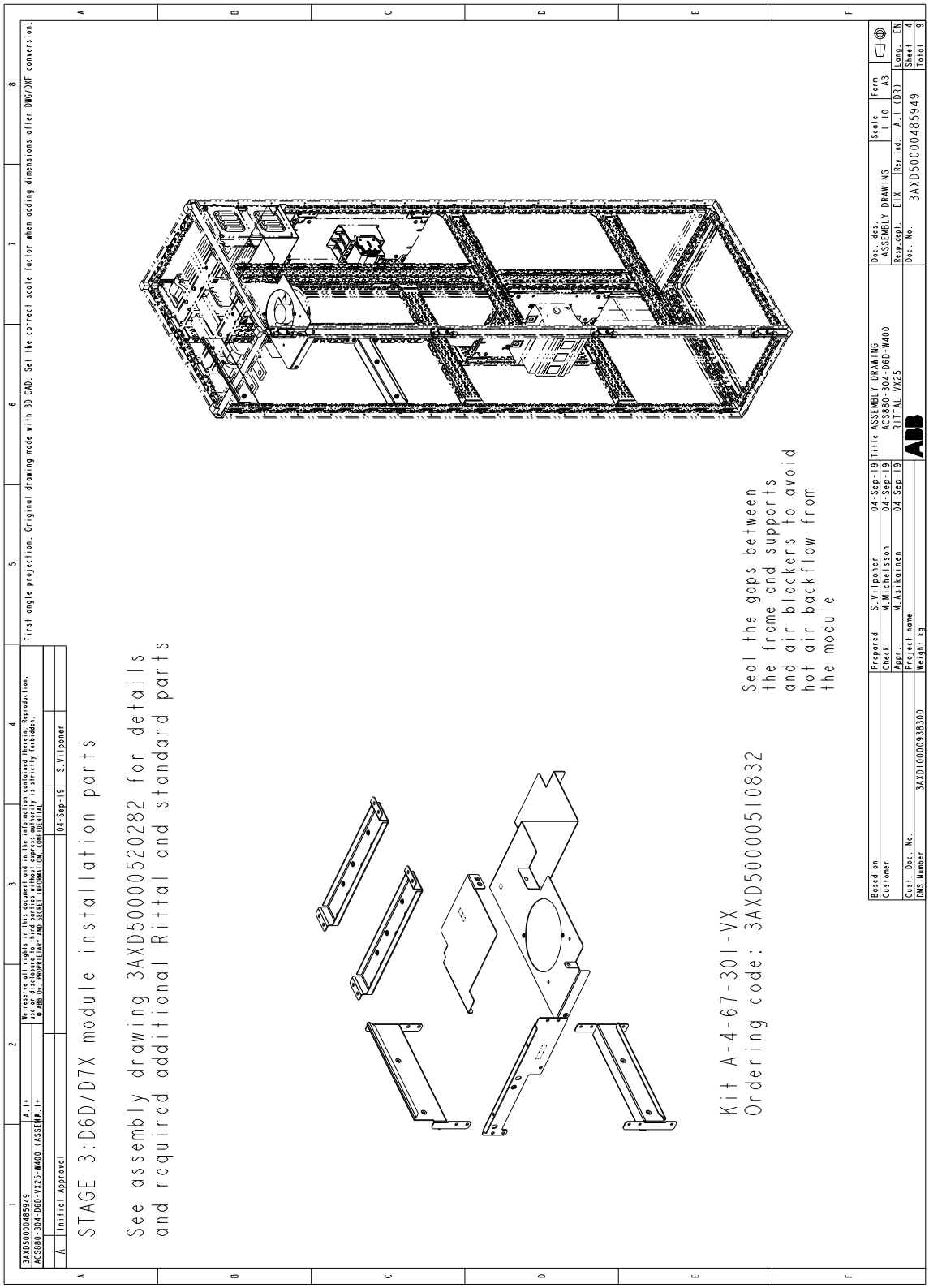

Stage 4: AC busbar installation

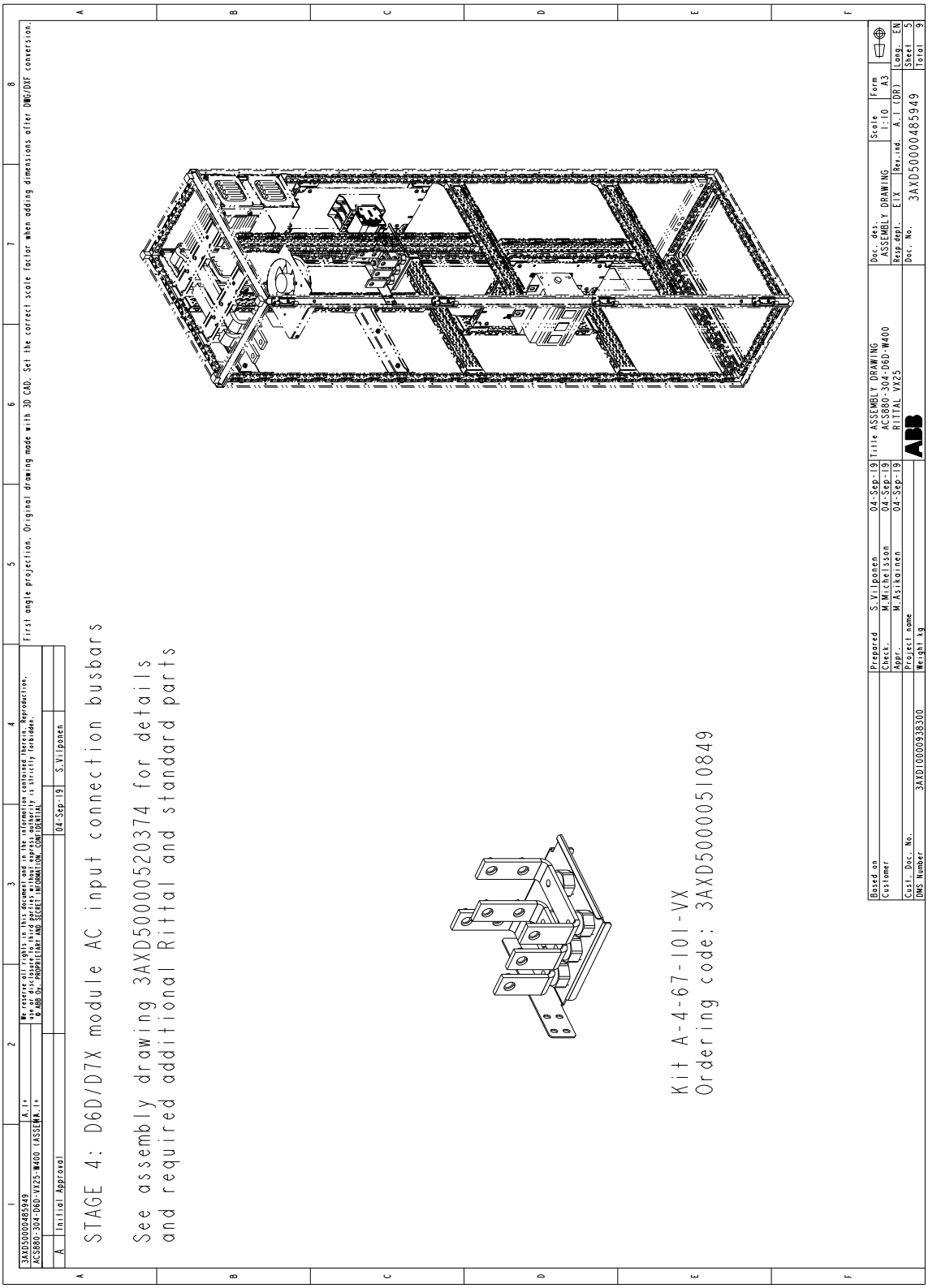

Stage 5: Main circuit cabling

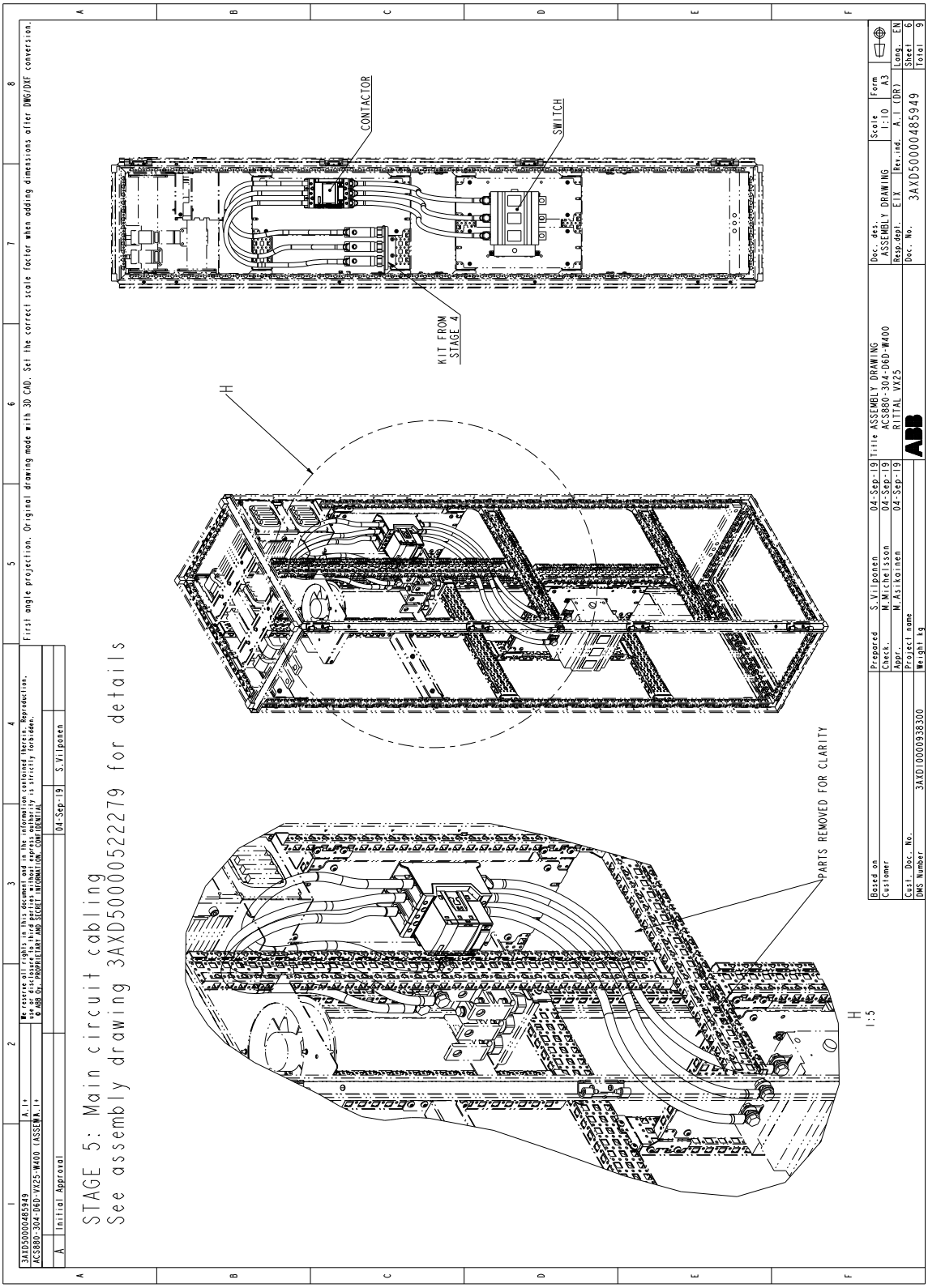

Stage 6: Control unit installation

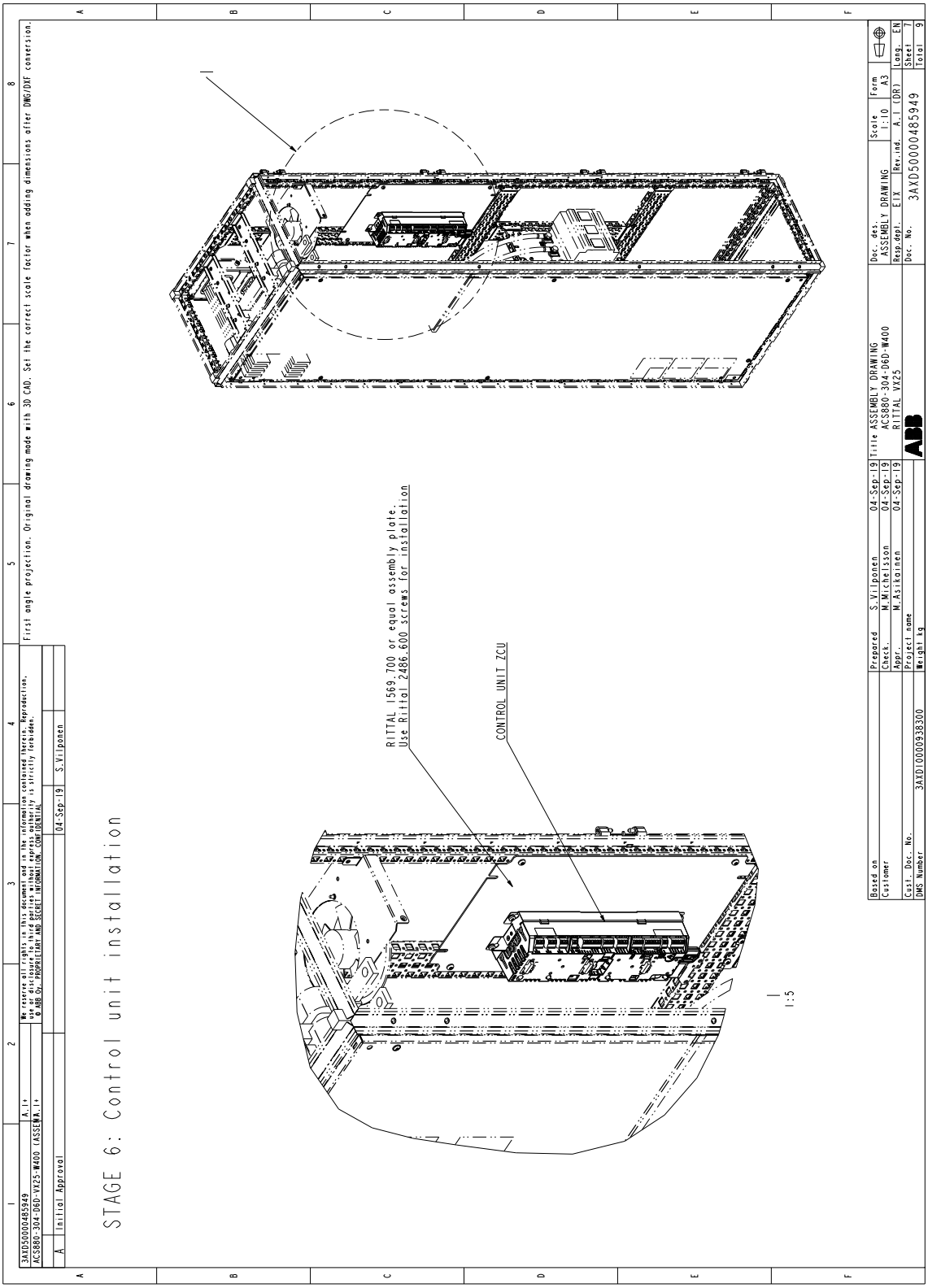

Stage 7: Module installation

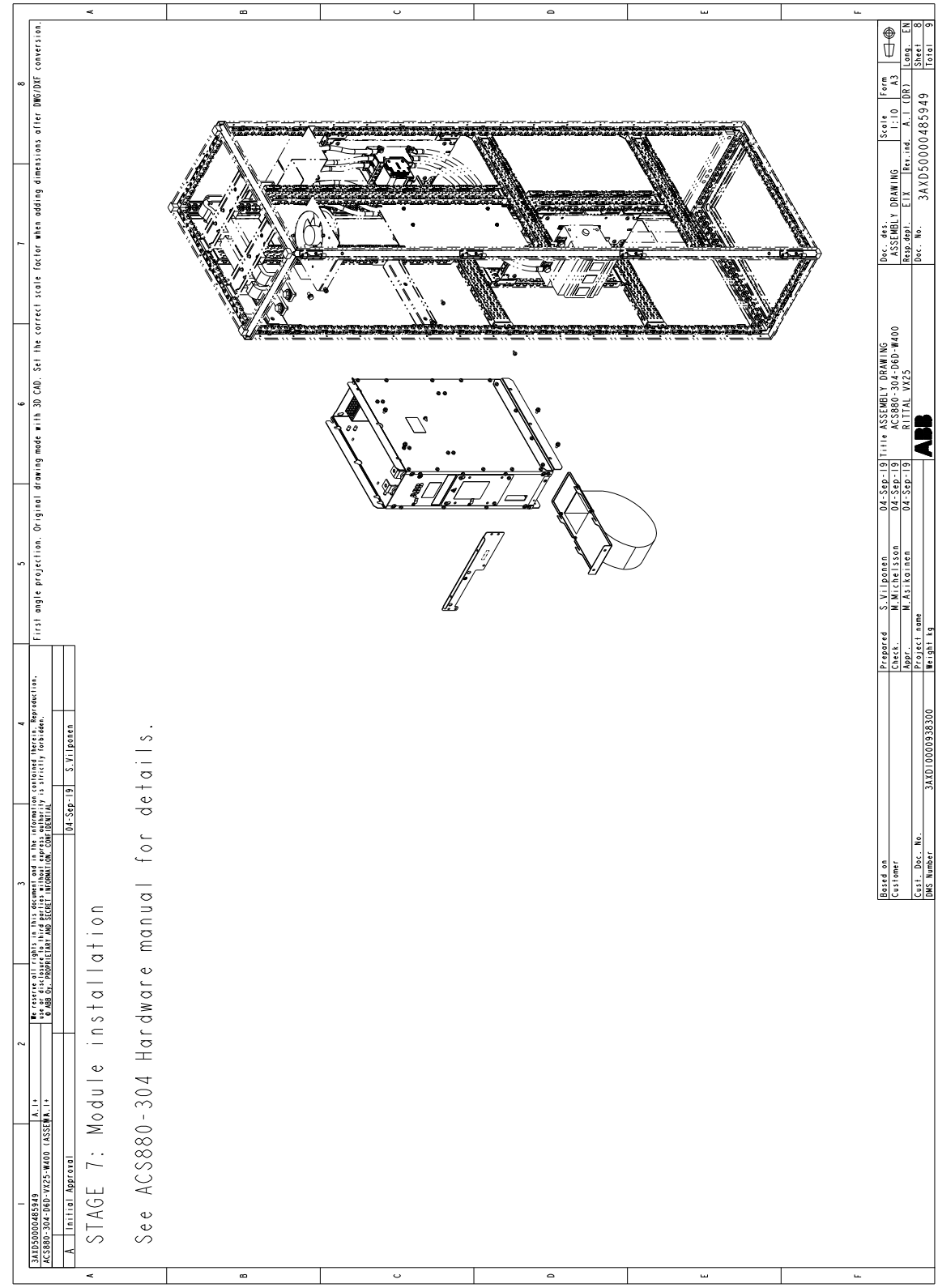

Stage 8: D6D shroud installation

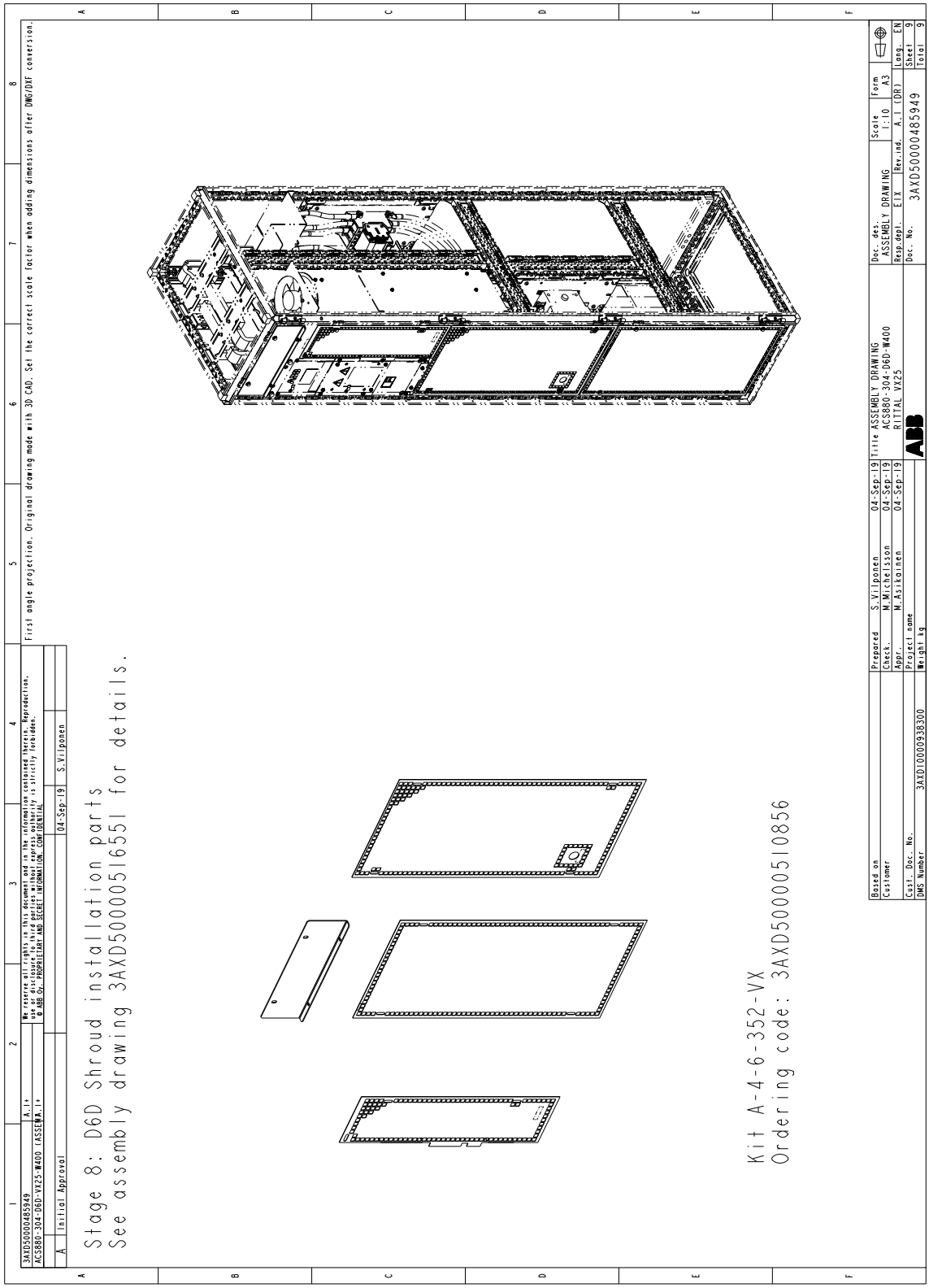

D7D module in a 400 mm wide Rittal VX25 enclosure

The following figure shows an example of the D7D module in the Rittal VX25 enclosure. In the example, the power cables are routed to the enclosure through the bottom.

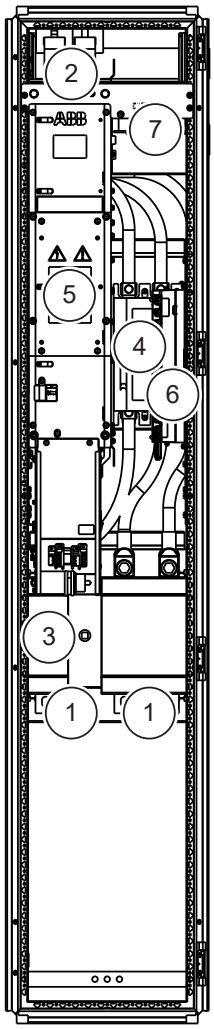

1	AC input
2	DC output
3	Main switch-disconnector [Q1] (with fuses)
4	Main contactor [Q2]
5	Diode supply module [T01]
6	Control unit [A51] **Note:** The control unit of DxD modules is a separate unit and it is always installed in the cabinet, NOT in the module itself or on the module.
7	Cabinet cooling fan [G24]

Installation stages

#	Installation stage	Instruction code	Kit code	Kit ordering code
1.	Installation of common parts:			
	• Baying parts	3AXD50000336340	-	-
	• PE busbar [PE]	3AXD50000336104	-	-
	• Divider panel	3AXD50000336692	-	-
	• Common DC Flat-PLS bracket	3AXD50000333639	A-468-X-001-VX	3AXD50000333387
2.	Main switch-disconnector [Q1] and main contactor [Q2] installation	3AXD50000520657	A-4-7-334-VX	3AXD50000520534
3.	D6D/D7D module installation parts	3AXD50000520282	A-4-67-301-VX	3AXD50000510832
4.	D6D/D7D module AC input connection busbars	3AXD50000520374	A-4-67-101-VX	3AXD50000510849
5.	Main circuit cabling	3AUA0000115495	-	-
6.	Control unit installation	-	-	-
7.	Module installation	-	-	-
8.	D7D shroud installation	3AXD50000521258	A-4-7-351-VX	3AXD50000510863

Kits for D7D module in a 400 mm wide Rittal VX25 enclosure

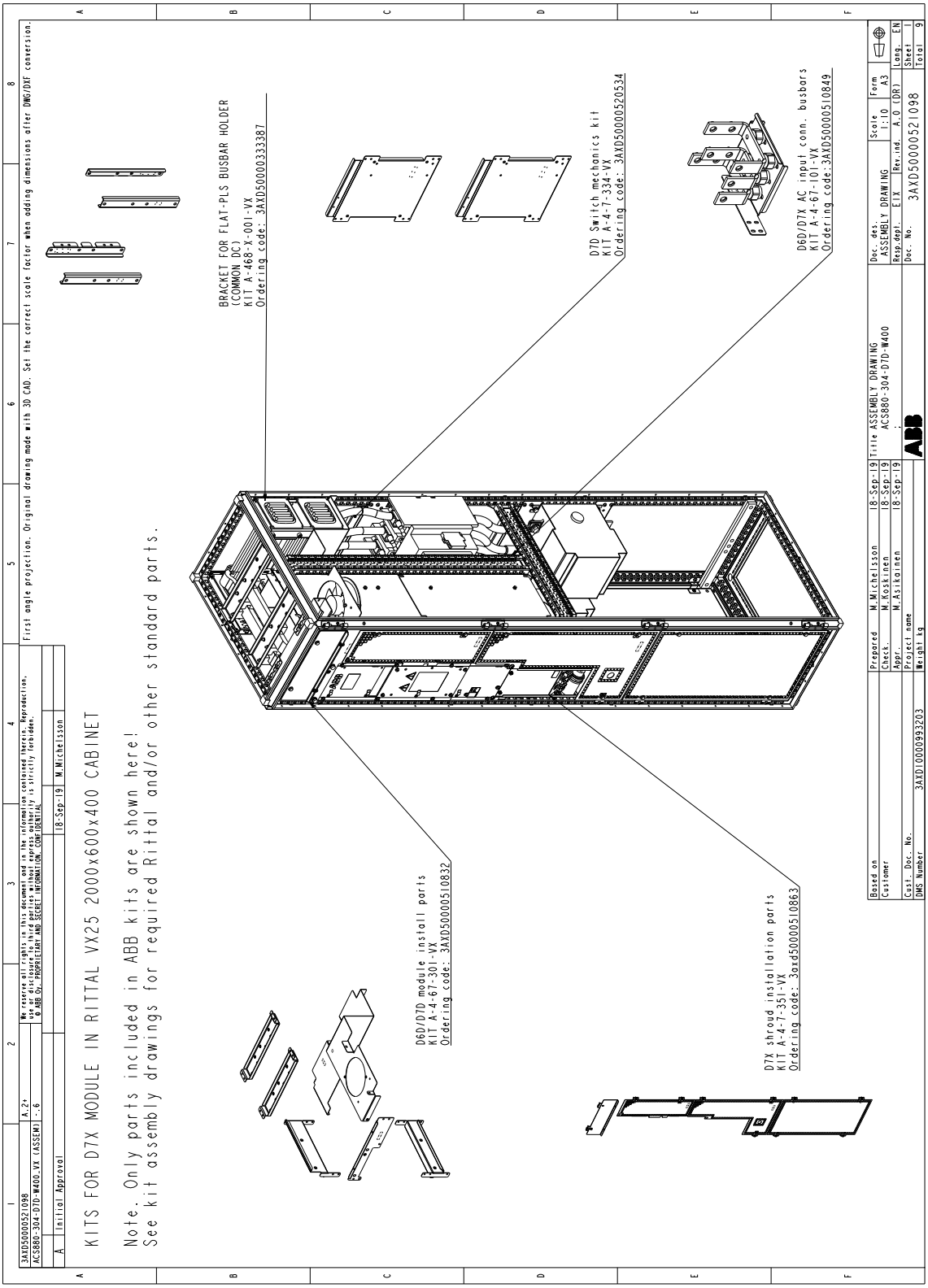

Stage 1: Installation of common parts

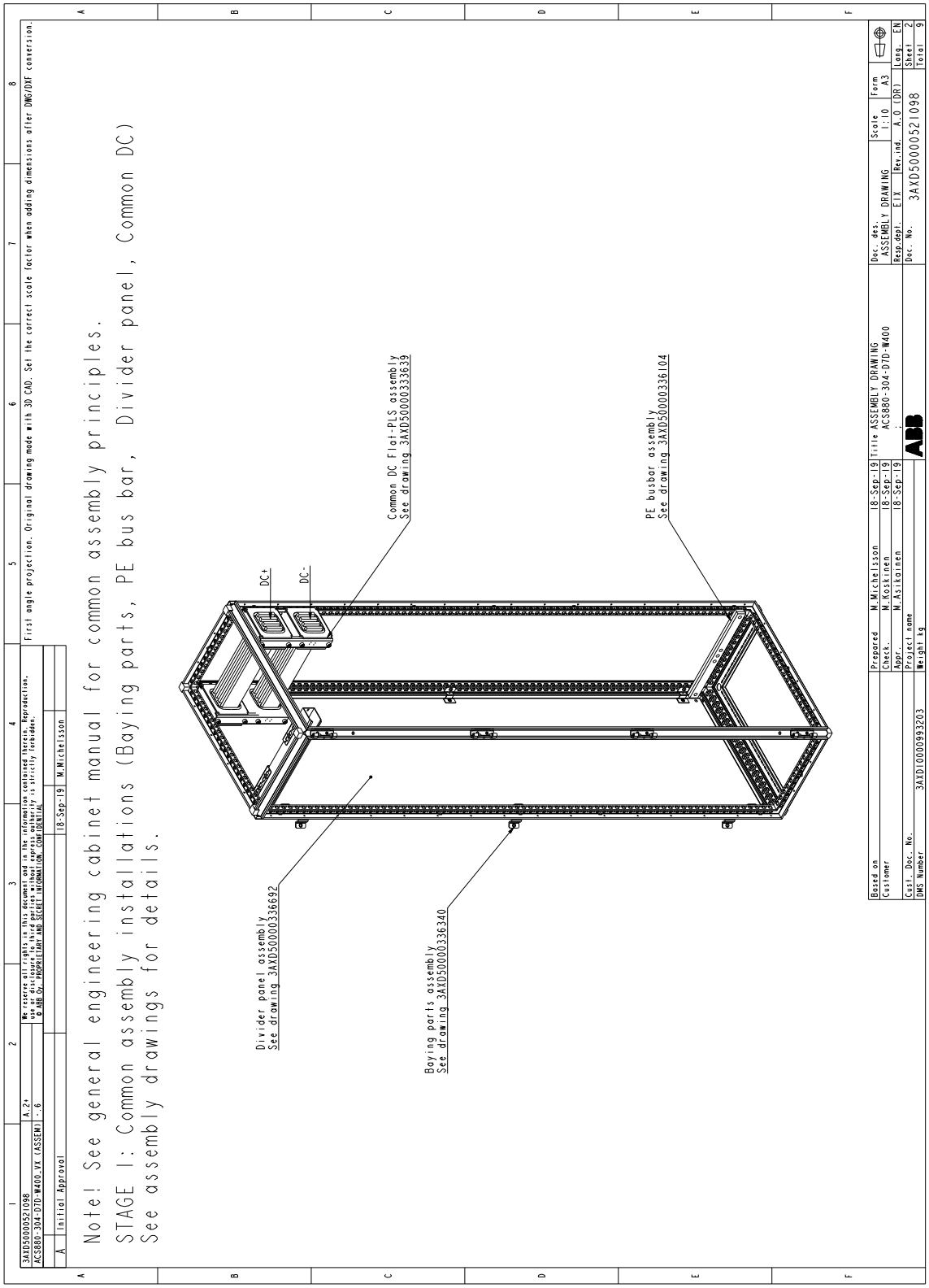

Stage 2: Main switch-disconnector and main contactor installation

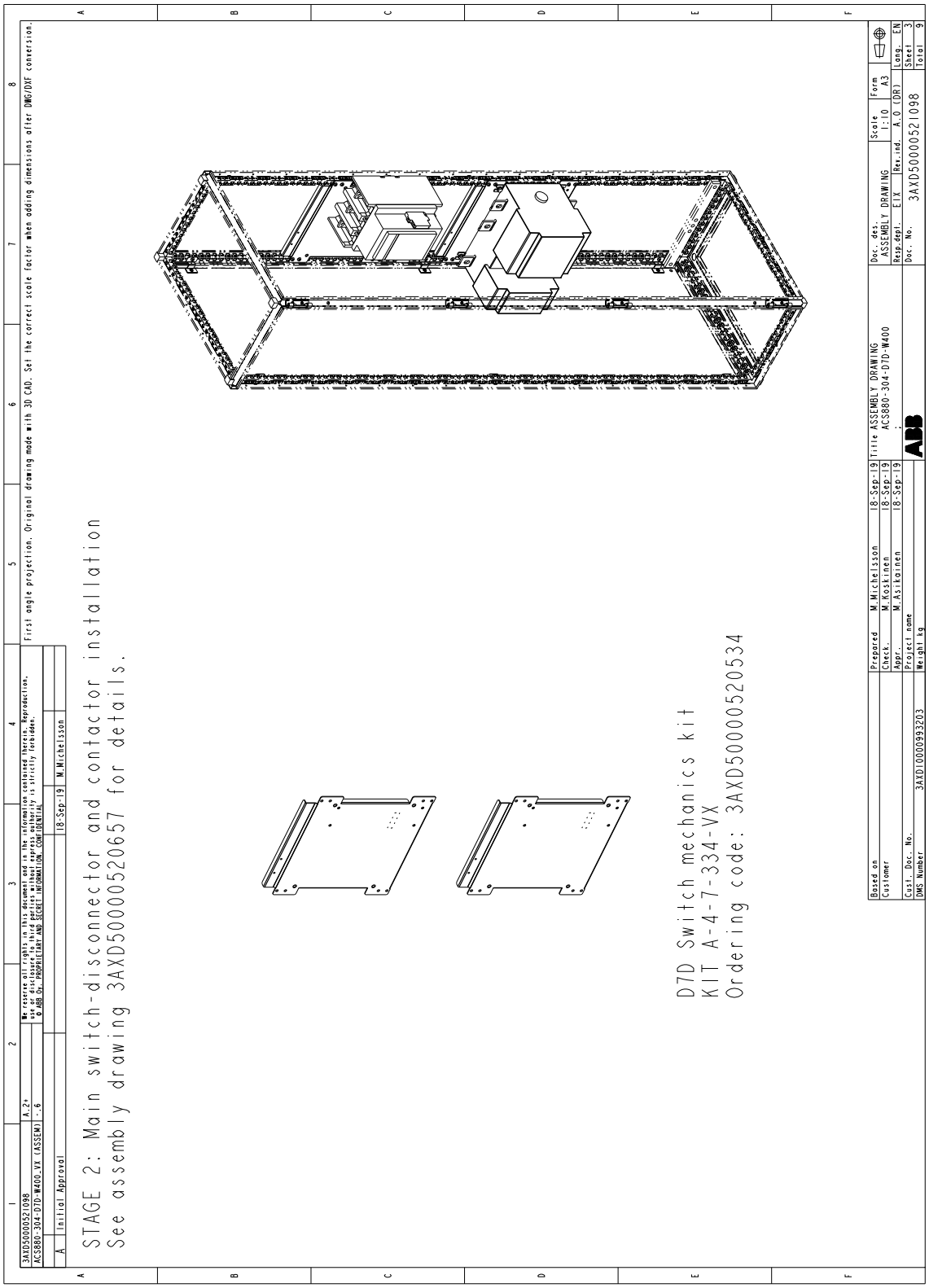

Stage 3: D6D/D7D module installation parts

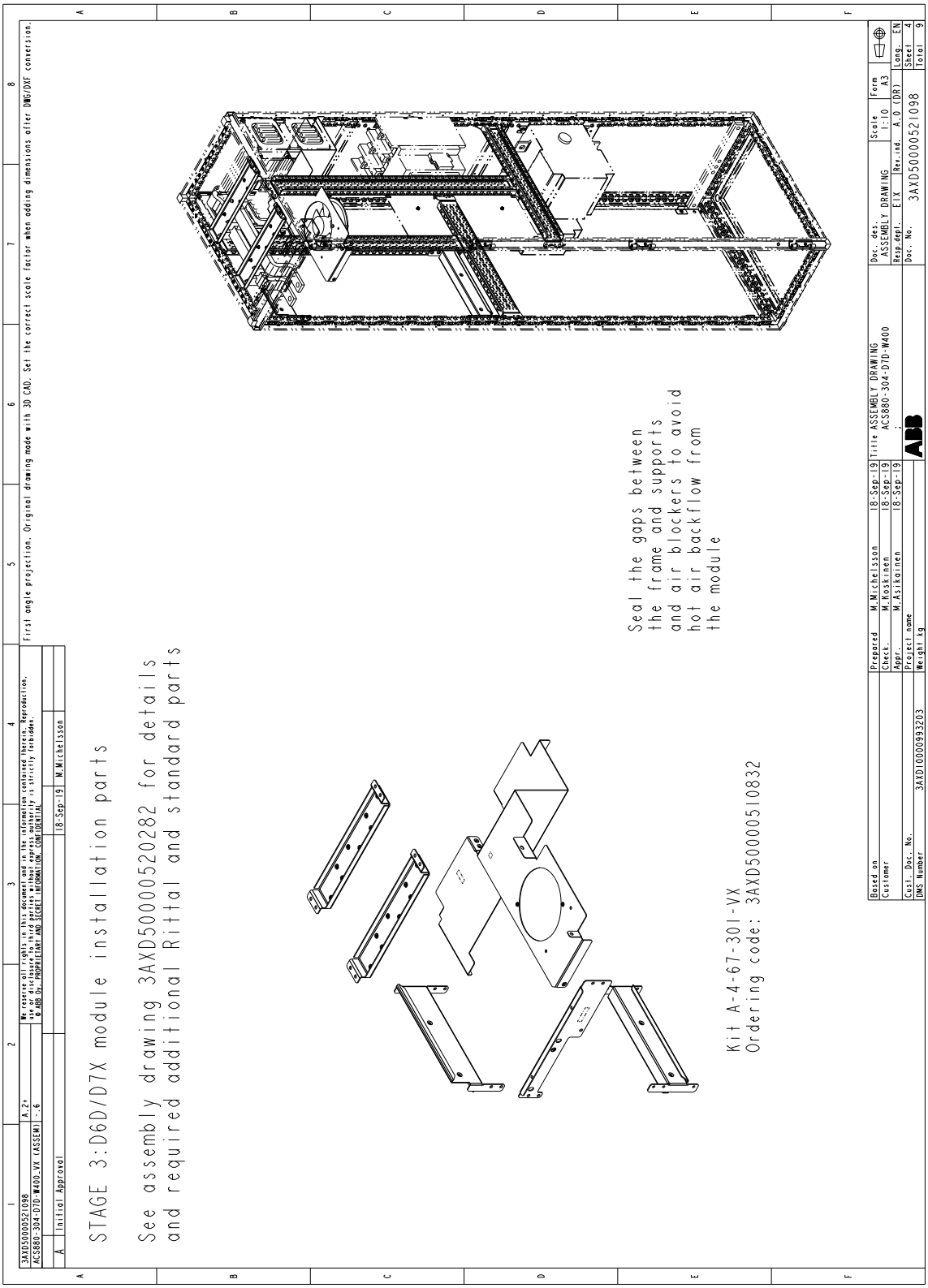

Stage 4: AC busbar installation

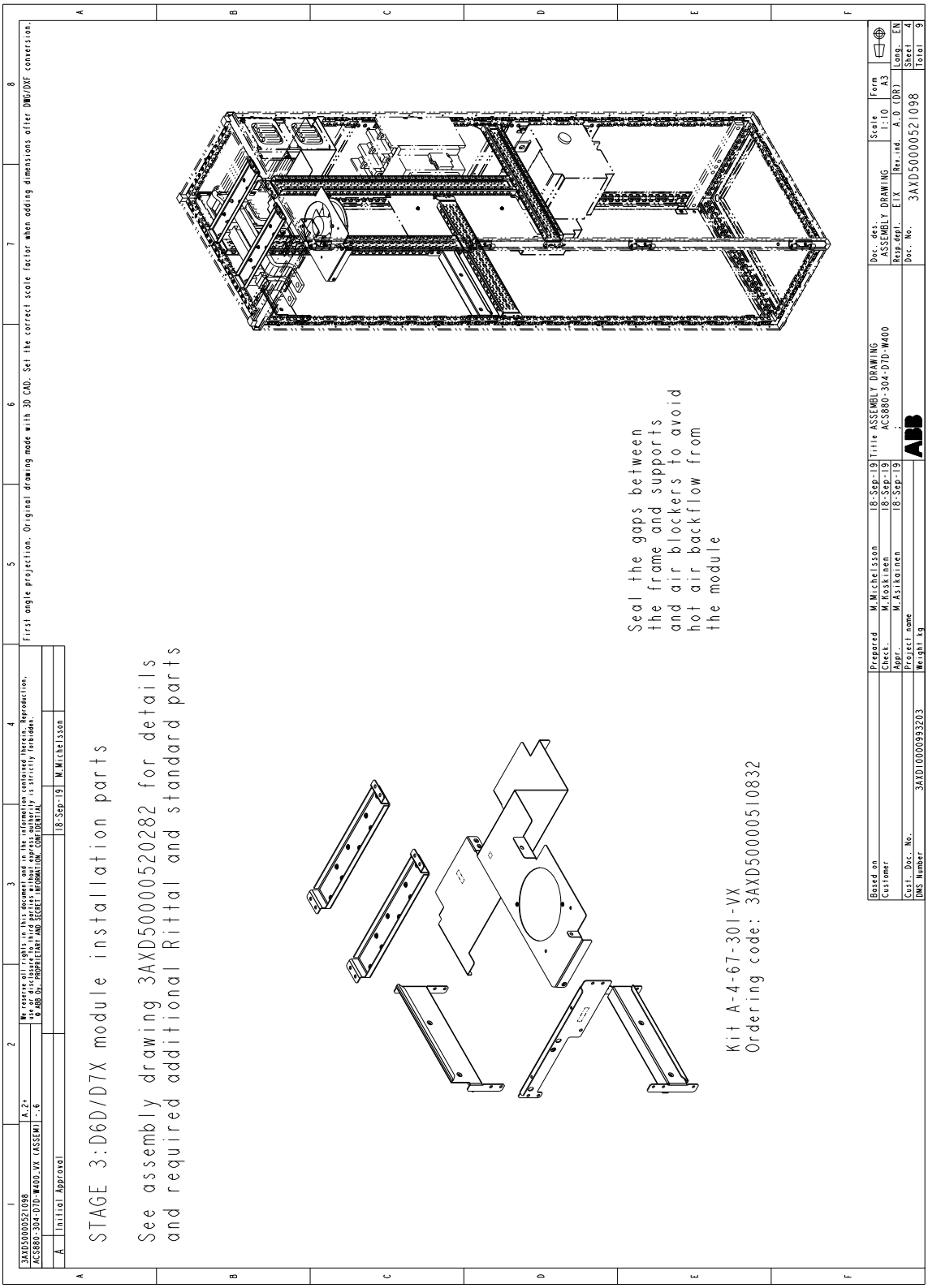

Stage 5: Main circuit cabling

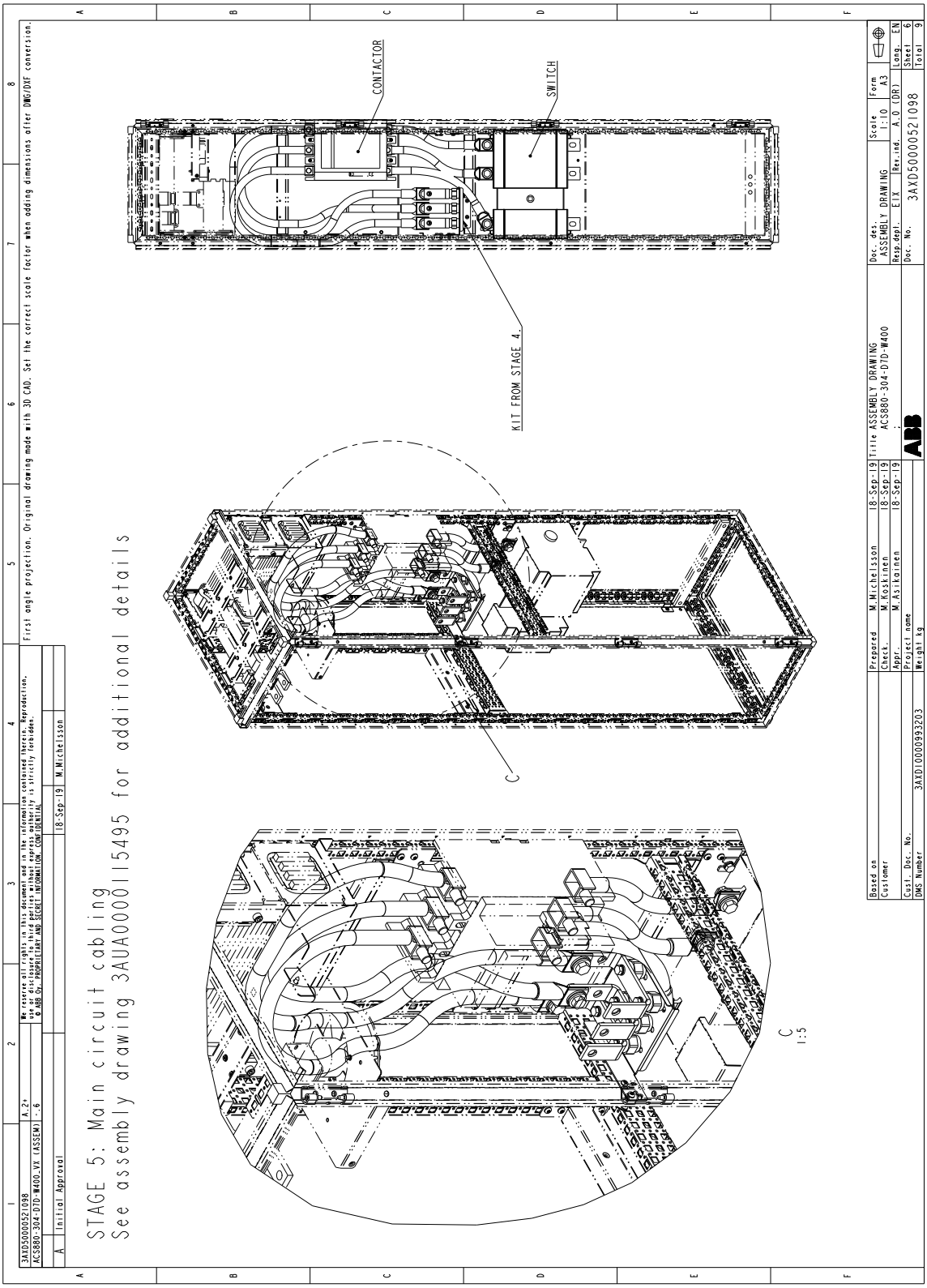

Stage 6: Control unit installation

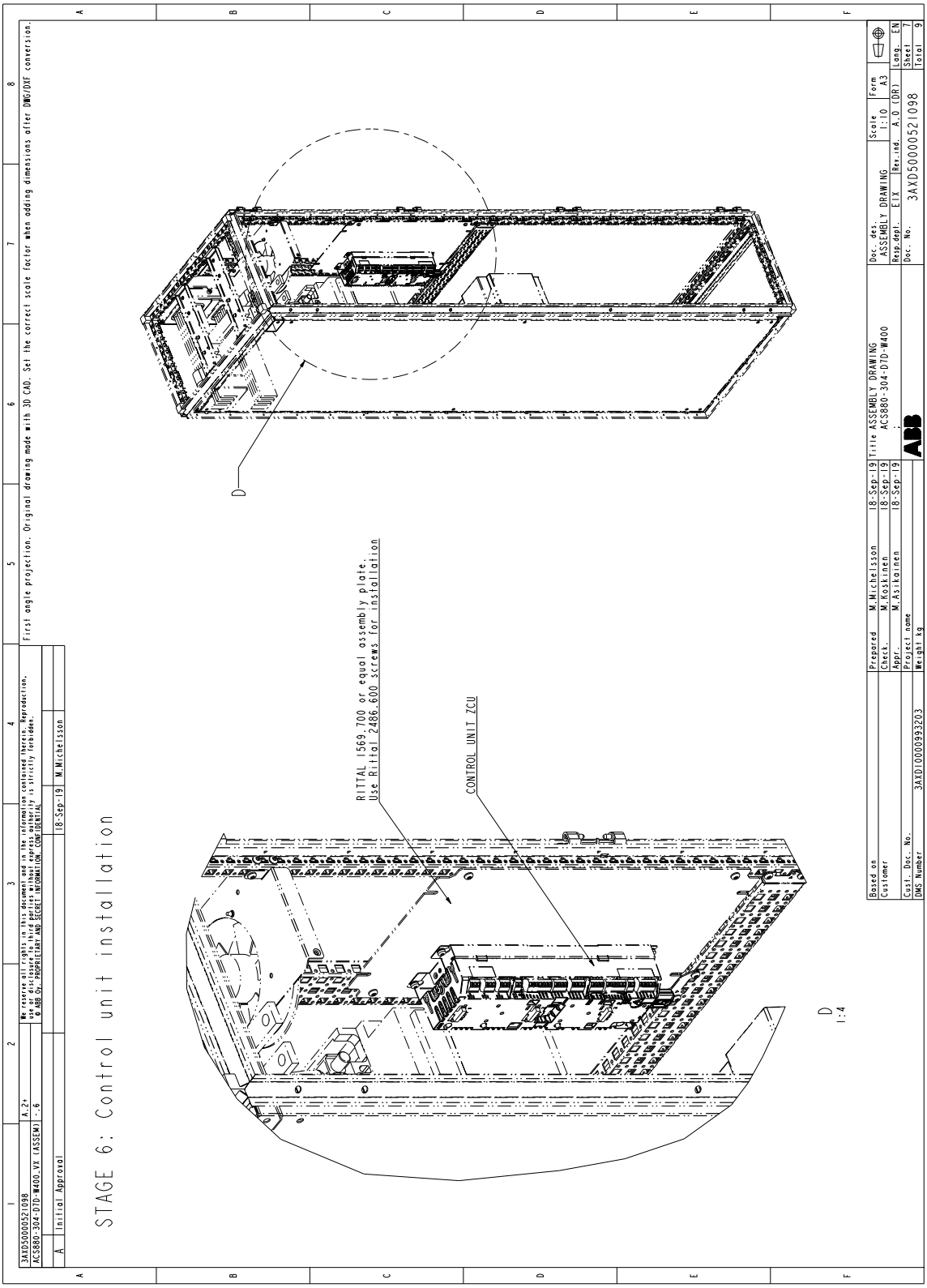

Stage 7: Module installation

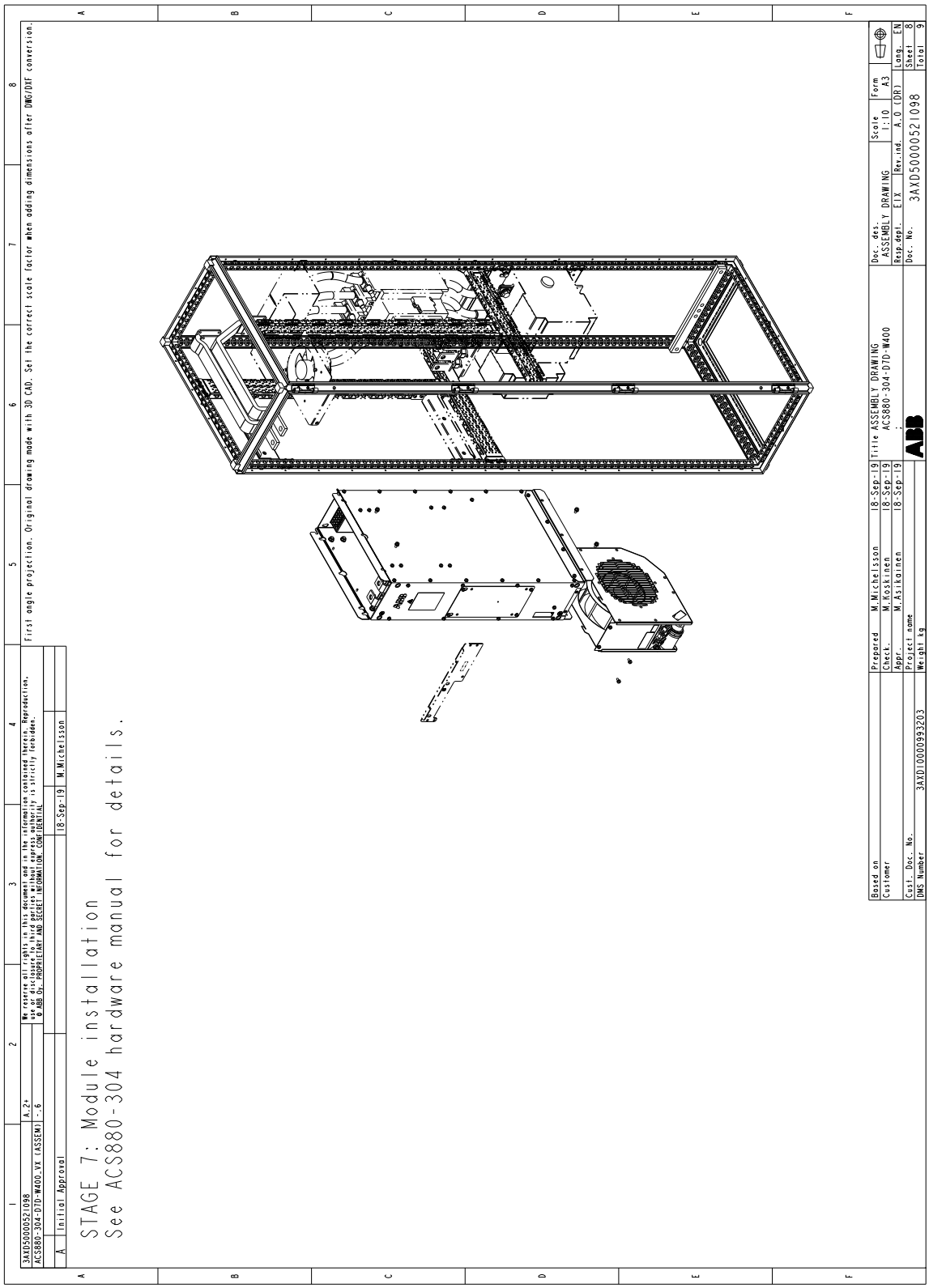

Stage 8: Shroud installation

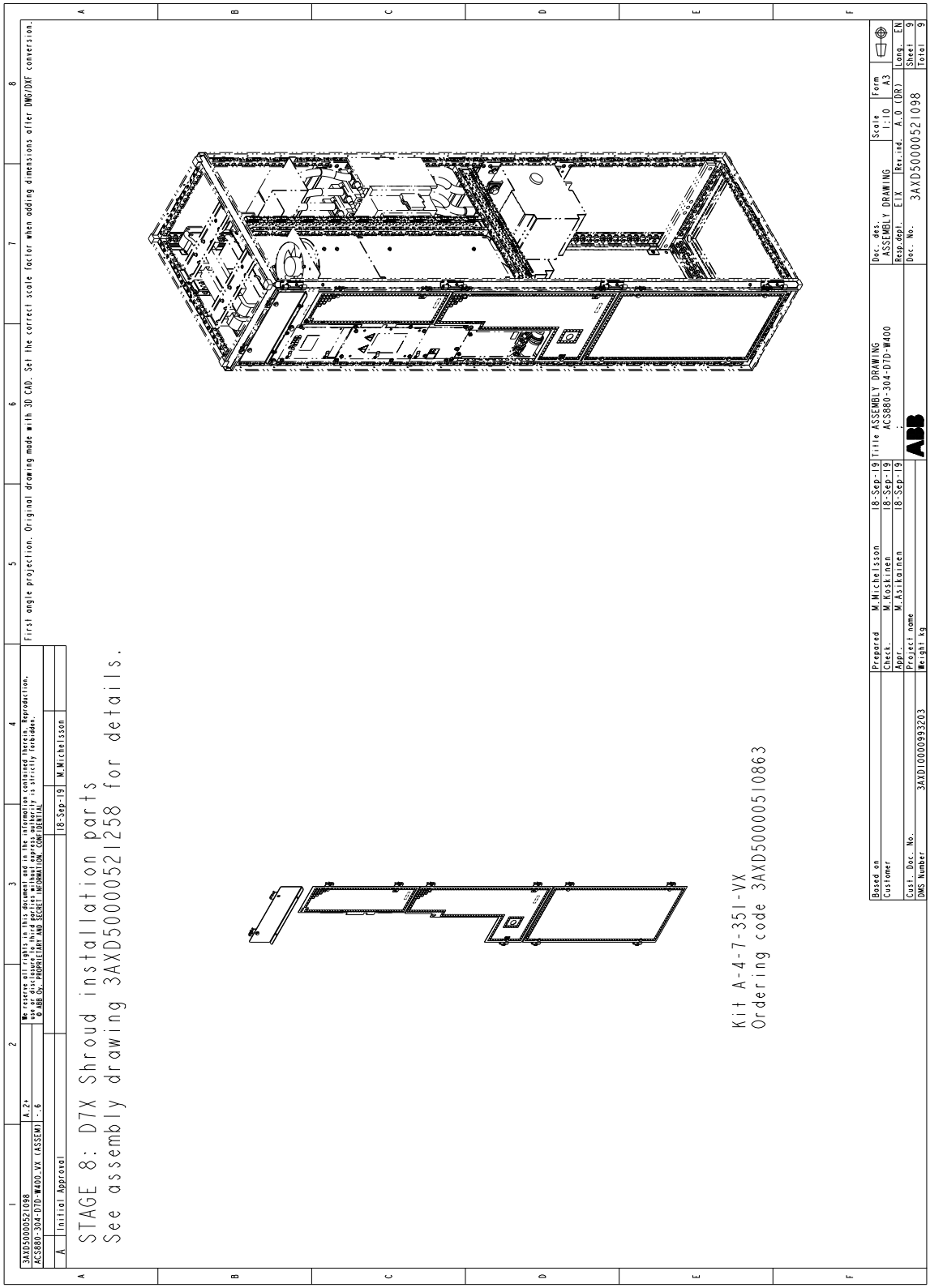

D8D module in a 400 mm wide Rittal VX25 enclosure

The following figure shows an example of the D8D module in the Rittal VX25 enclosure. In the example, the AC power supply is connected to the module by busbars from an adjacent cabinet. The customer must place the control equipment in a separate cabinet.

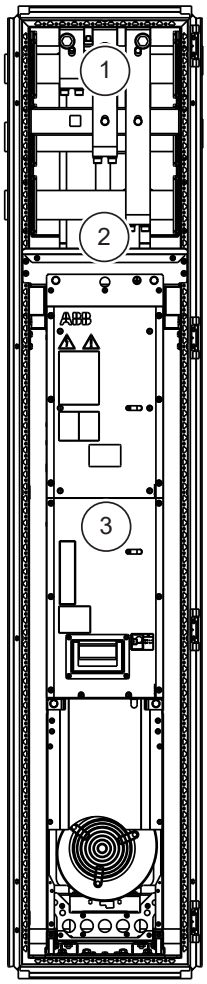

1	AC input
2	DC output
3	Diode supply module [T01]

Installation stages

#	Installation stage	Instruction code	Kit code	Kit ordering code
1.	Installation of common parts:			
	• Baying parts	3AXD50000336340	-	-
	• PE busbar [PE]	3AXD50000336104	-	-
	• Divider panel	3AXD50000336692	-	-
	• Bracket for Flat-PLS busbar holder (common AC)	3AXD50000372782	A-468-X-011-VX	3AXD50000360772
	• Bracket for Flat-PLS busbar holder (common DC)	3AXD50000333639	A-468-X-001-VX	3AXD50000333387
2.	D8D module installation W400	3AXD5000000372799	A-4-8-303-VX	3AXD50000371877
3.	Quick connector installation	3AUA0000115013 3AUA0000118667	A-468-8-100	3AUA0000119227
4.	D8D DC busbars	3AXD50000373871	A-4-8-201-VX	3AXD50000371884
5.	D8D AC busbars to quick connect-or	3AXD50000379736	A-4-8-180-VX	3AXD50000371860
6.	D8D AC busbars to main AC	3AXD50000417247	A-4-8-102-VX	3AXD50000371853
7.	Module installation	-	-	-
8.	D8D shroud installation W400	3AXD50000335169	A-4-8-359-VX	3AXD50000337484

Kits for D8D module in a 400 mm wide Rittal VX25 enclosure

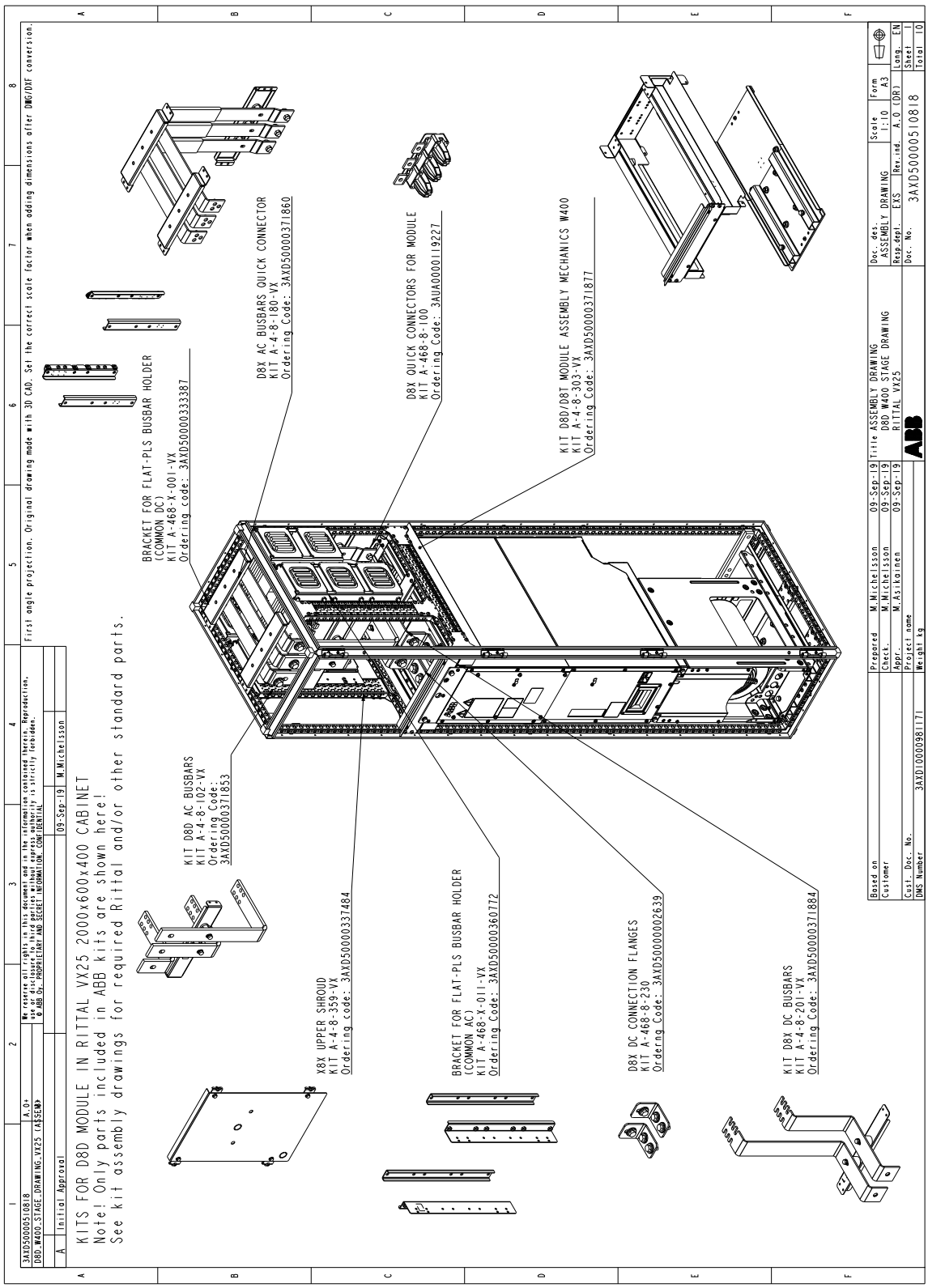

Stage 1: Installation of common parts

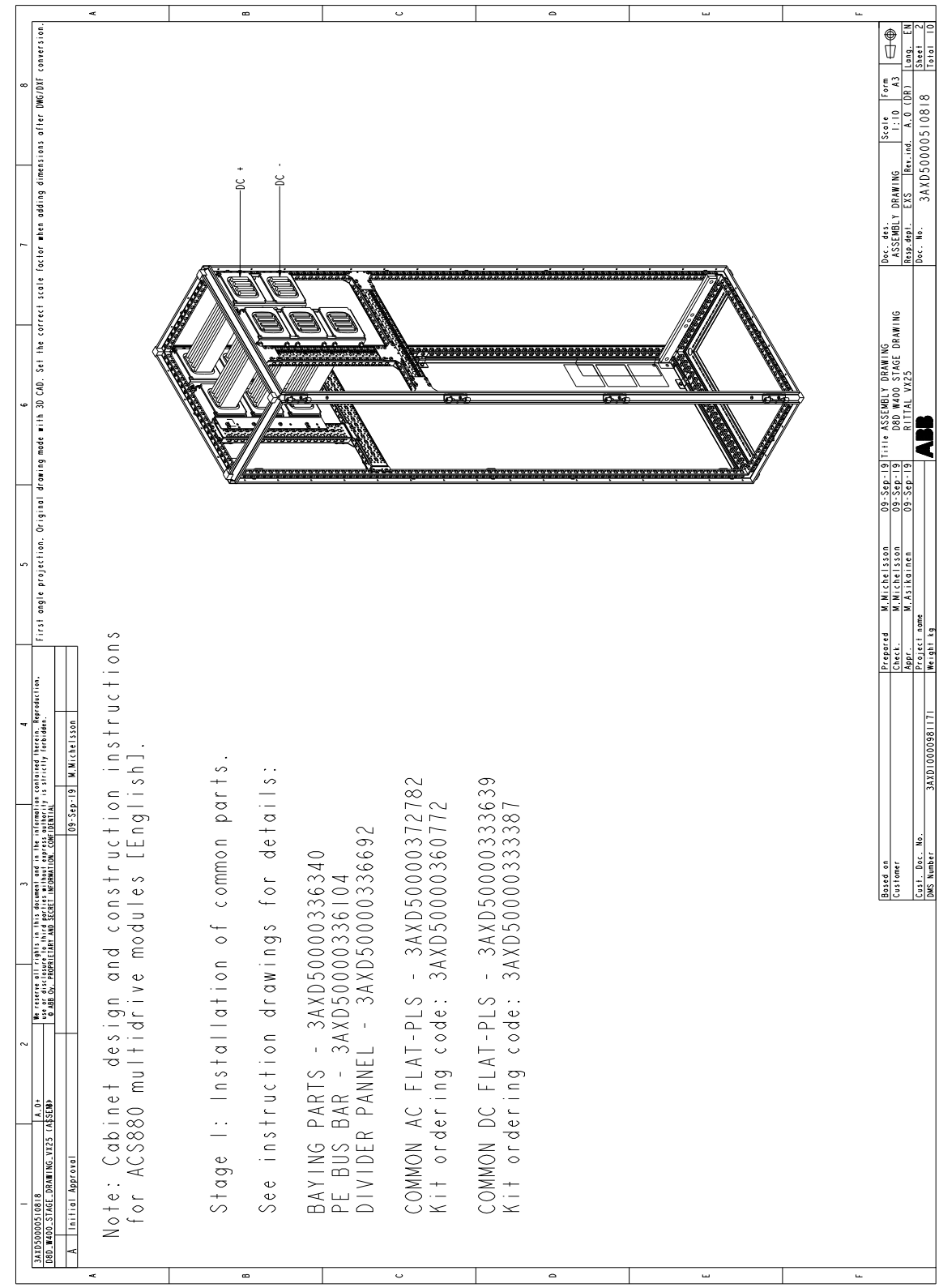

Stage 2: D8D/D8T module installation parts

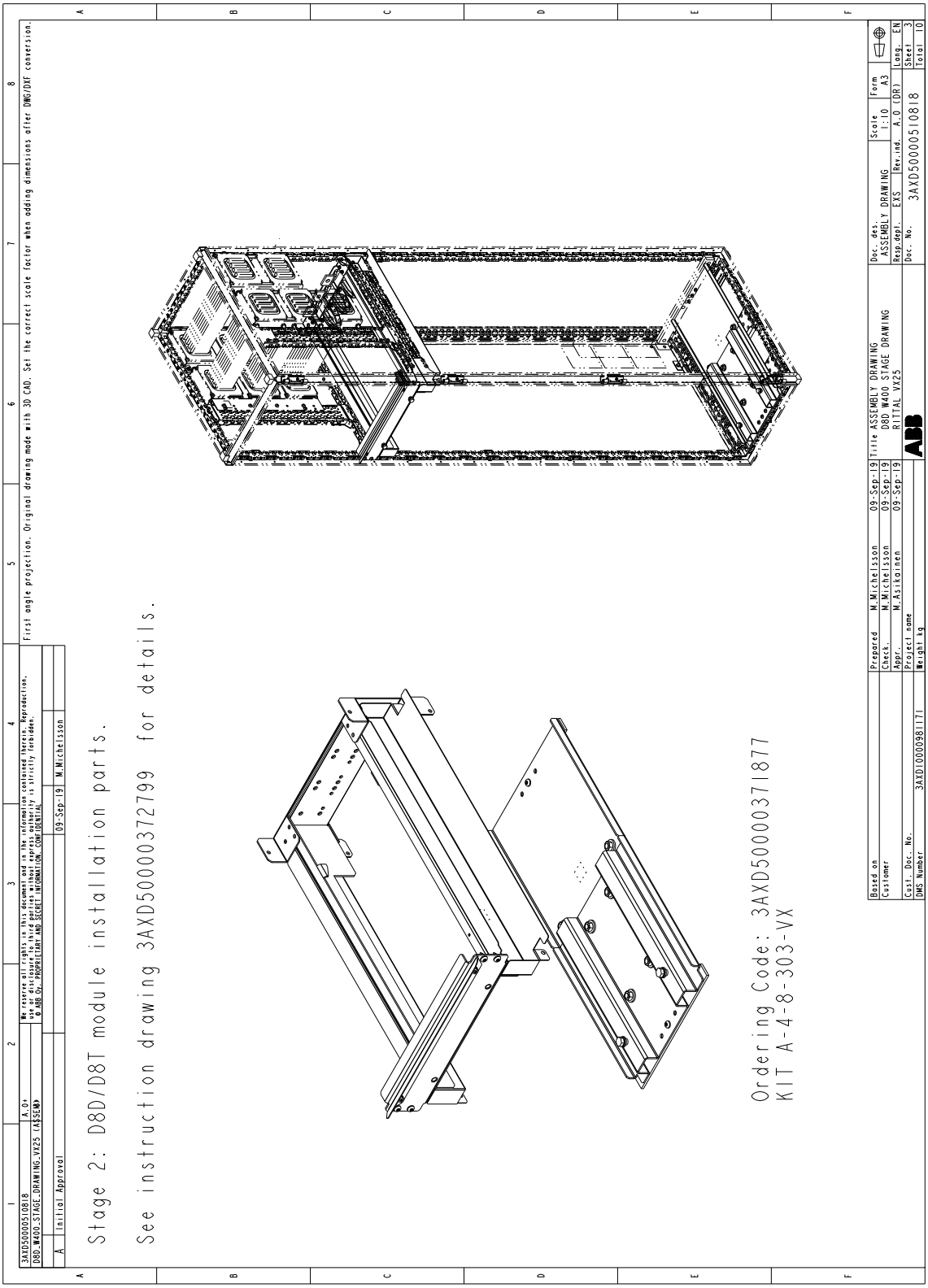

Stage 3: Quick connector installation

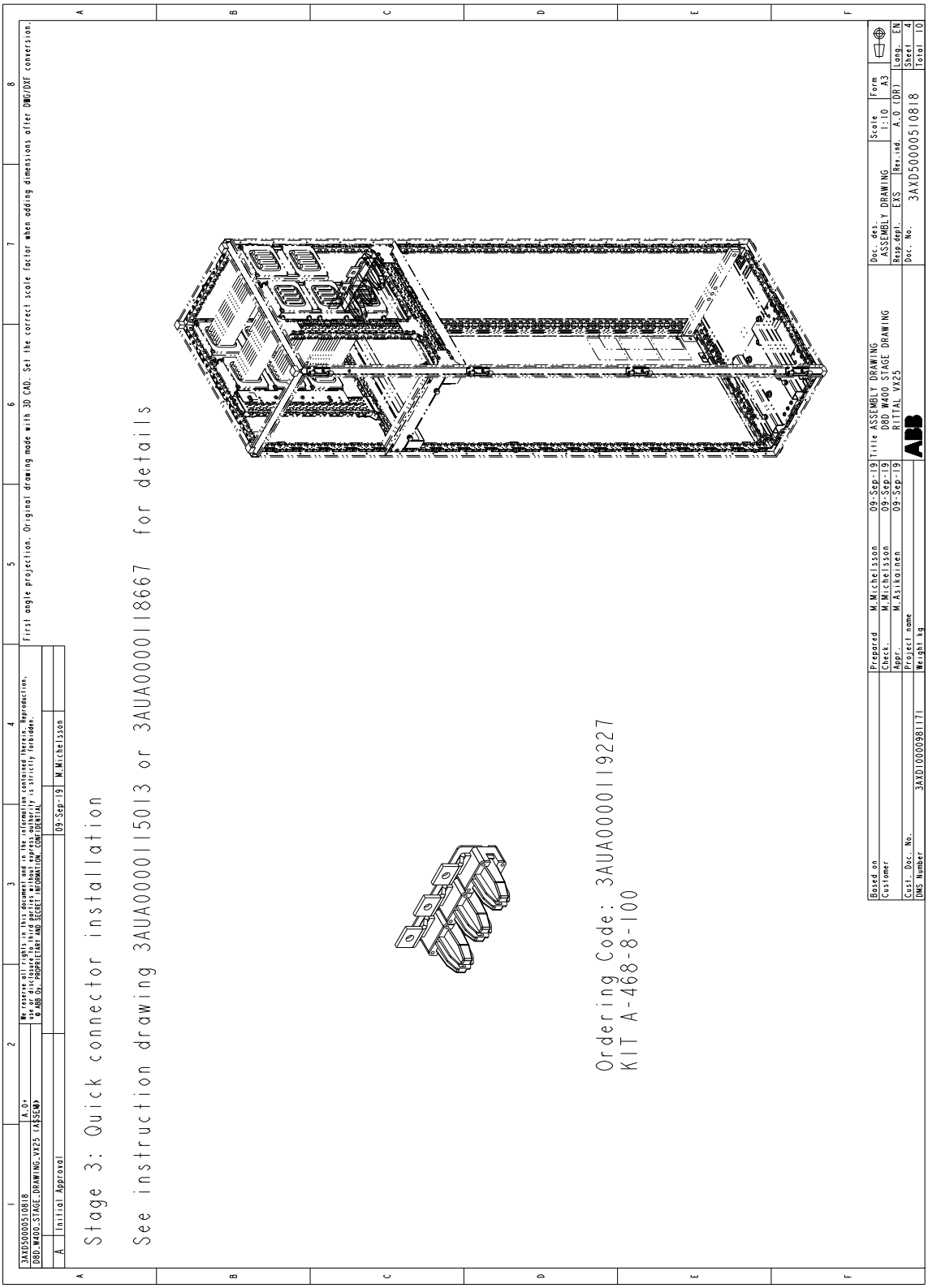

Stage 4: D8D DC busbar installation

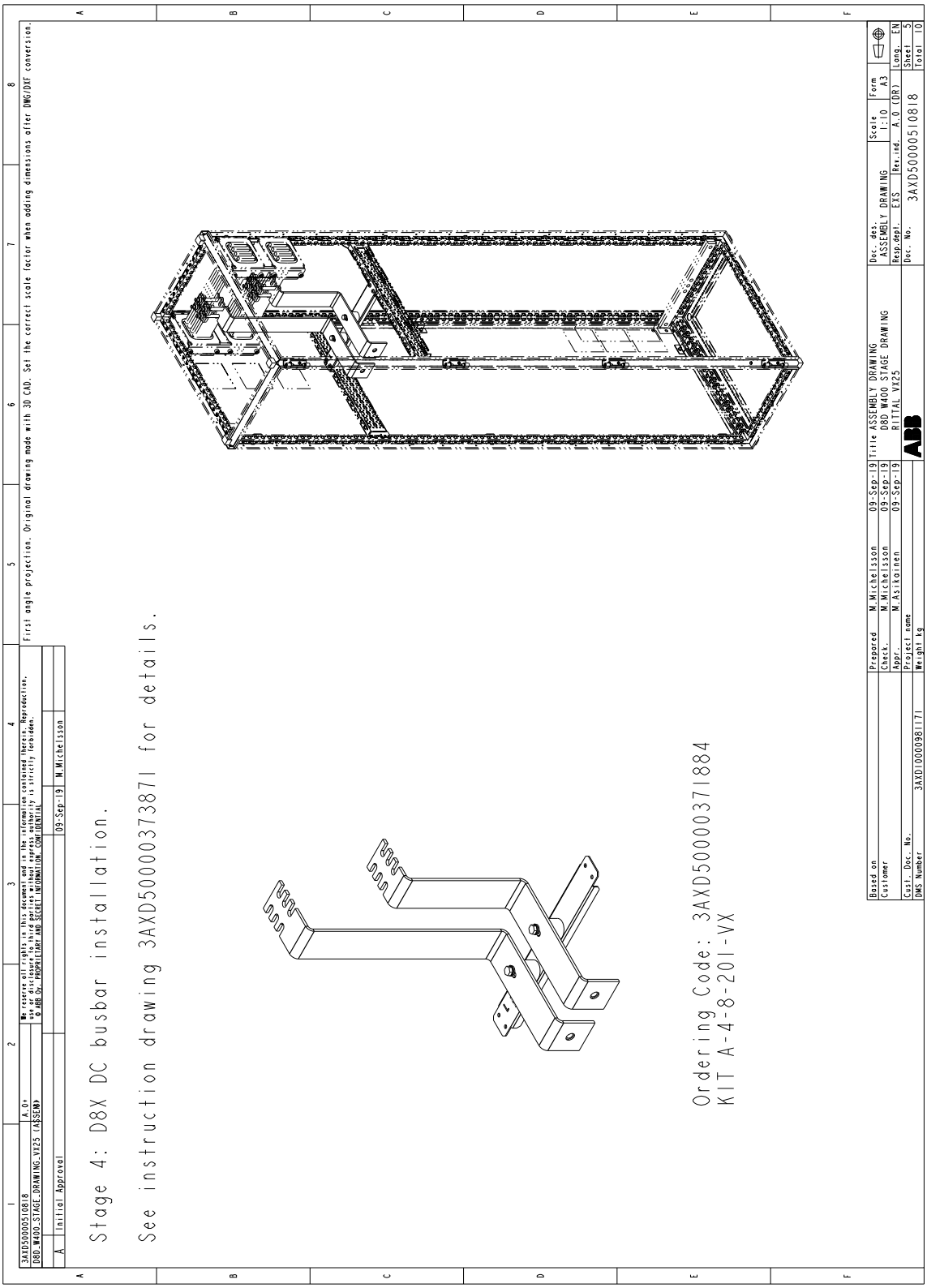

Stage 5: D8D busbars to quick connector

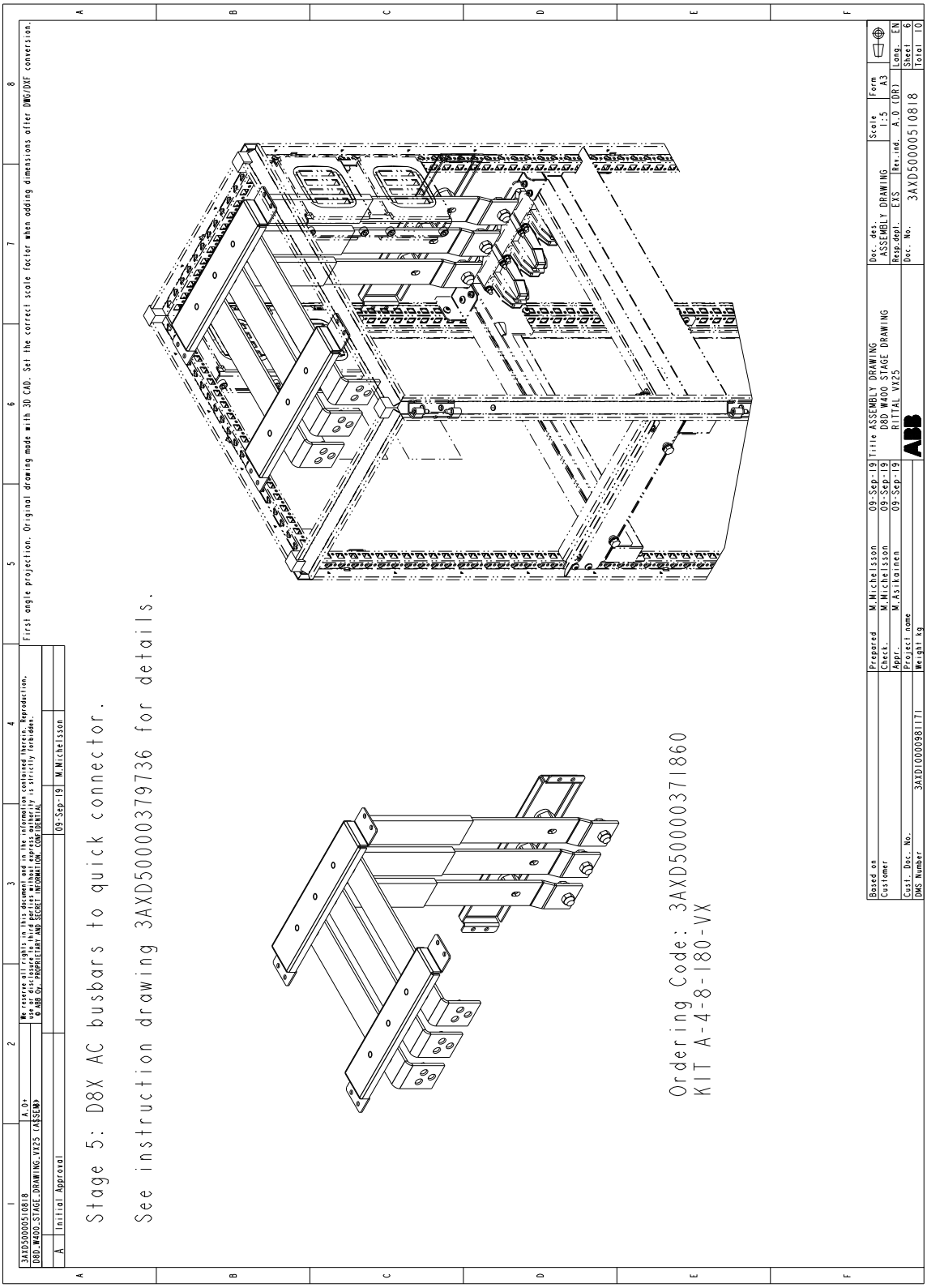

Stage 6: D8D AC busbar installation

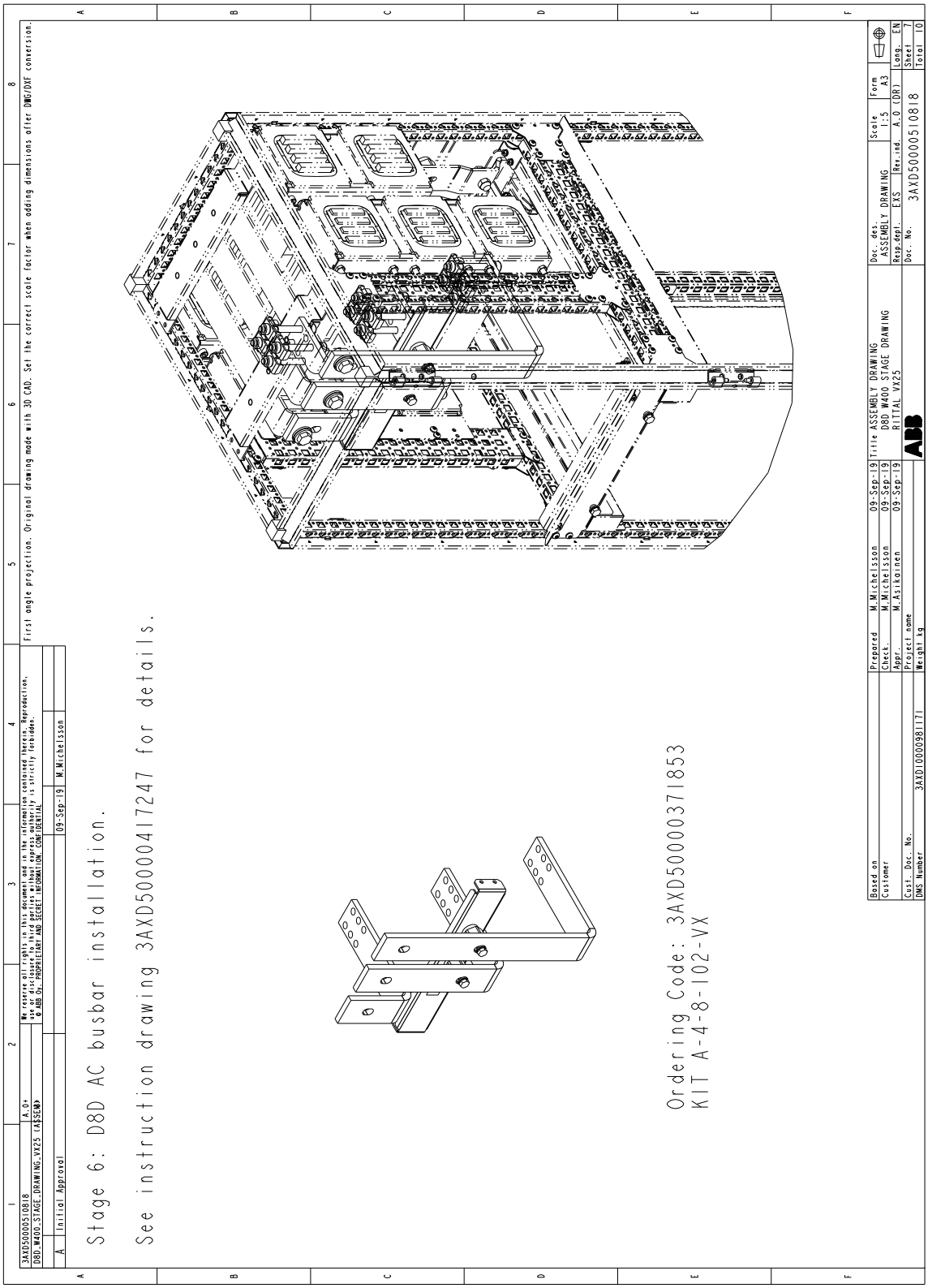

Stage 7: D8D module installation

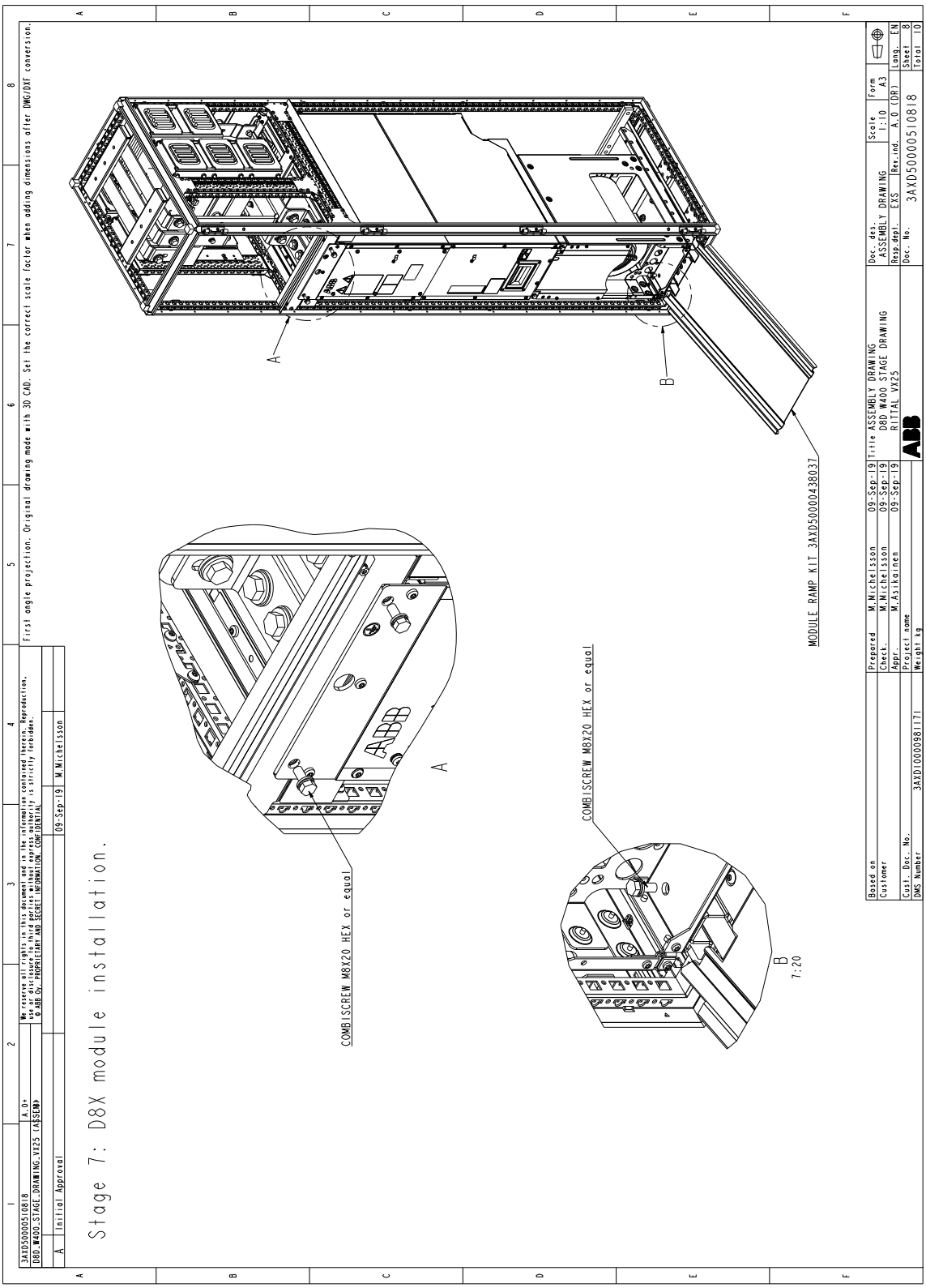

Stage 8: D8D shroud installation

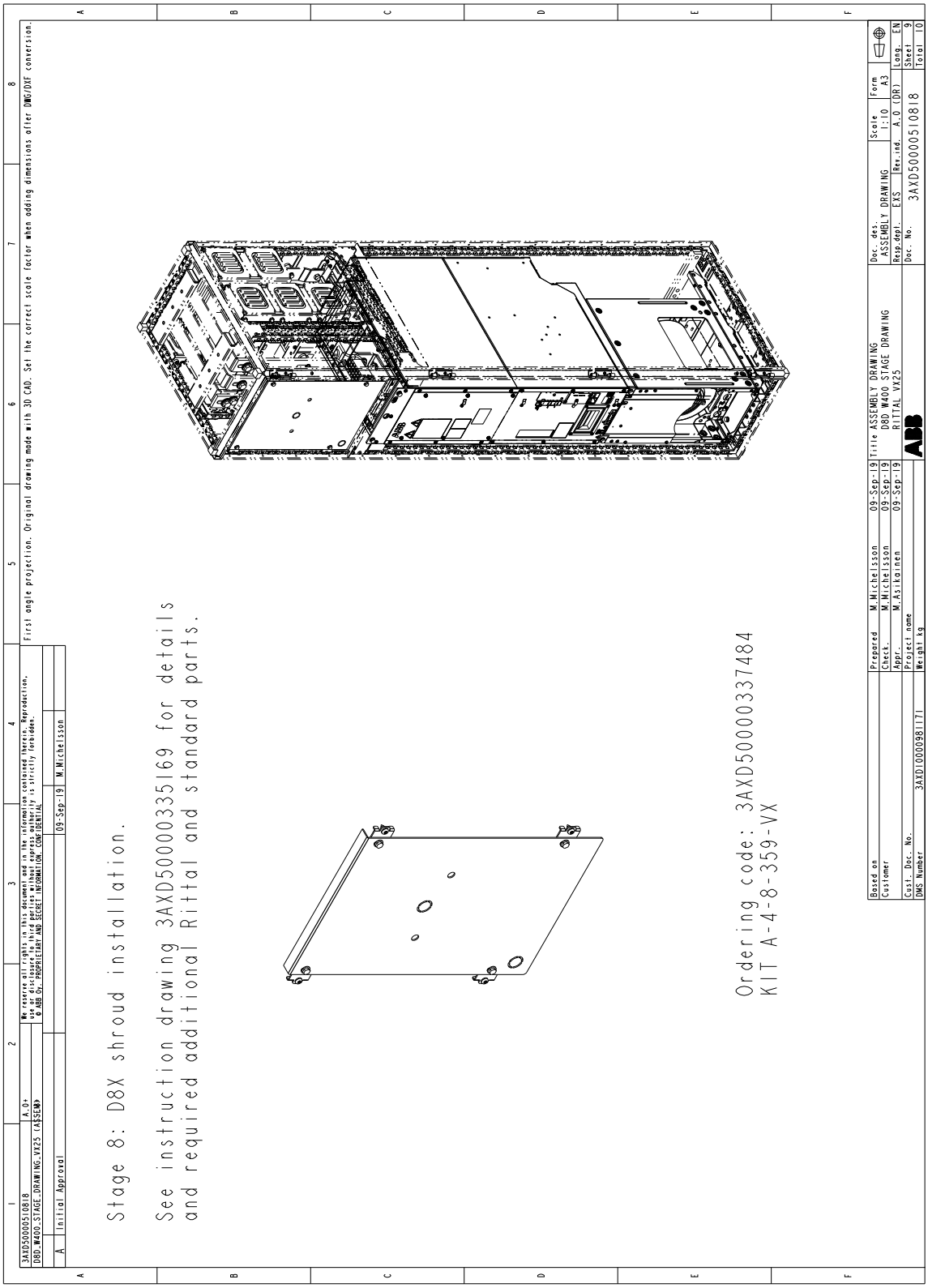

5

Electrical installation

Contents of this chapter

This chapter describes the electrical installation of the modules.

The wiring diagrams in this chapter are simplified presentations. For details, see the example circuit diagrams included in the manual.

Note: The instructions do not cover all possible cabinet constructions.

For more information on electrical installation, see *ACS880 multidrive cabinets and modules electrical planning instructions* (3AUA0000102324 [English]).

Safety and liability

WARNING!
Only qualified electrical professionals are allowed to do the work described in this chapter. Read the **complete safety instructions** before you install, commission, use or service the drive. The complete safety instructions are given in *ACS880 multidrive cabinets and modules safety instructions* (3AUA0000102301 [English]).

Note: The installation must always be designed and made according to applicable local laws and regulations. ABB does not assume any liability whatsoever for any installation which breaches the local laws and/or other regulations. Furthermore, if the recommendations given by ABB are not followed, the drive system may experience problems that the warranty does not cover.

Electrical safety precautions

These electrical safety precautions are for all personnel who do work on the drive, motor cable or motor.

WARNING!
Obey these instructions. If you ignore them, injury or death, or damage to the equipment can occur.

If you are not a qualified electrical professional, do not do installation or maintenance work.

Go through these steps before you begin any installation or maintenance work.

1. Clearly identify the work location and equipment.
2. Disconnect all possible voltage sources. Make sure that re-connection is not possible. Lock out and tag out.
   - Open the main disconnecting device of the drive.
   - Open the charging switch if present.
   - Open the disconnector of the supply transformer. (The main disconnecting device in the drive cabinet does not disconnect the voltage from the AC input power busbars of the drive cabinet.)
   - If the drive is equipped with a DC/DC converter unit (optional): Open the DC switch-disconnector [Q11] of the DC/DC converter. Open the disconnecting device of the energy storage connected to the DC/DC converter unit (outside the drive cabinet).
   - Open the auxiliary voltage switch-disconnector (if present), and all other possible disconnecting devices that isolate the drive from dangerous voltage sources.
   - If you have a permanent magnet motor connected to the drive, disconnect the motor from the drive with a safety switch or by other means.
   - Disconnect any dangerous external voltages from the control circuits.
   - After you disconnect power from the drive, always wait 5 minutes to let the intermediate circuit capacitors discharge before you continue.
3. Protect any other energized parts in the work location against contact.
4. Take special precautions when close to bare conductors.
5. Measure that the installation is de-energized. If the measurement requires removal or disassembly of shrouding or other cabinet structures, obey the local laws and regulations applicable to live working (including – but not limited to – electric shock and arc protection).
   - Use a multimeter with an impedance greater than 1 Mohm.
   - Make sure that the voltage between the drive input power terminals (L1, L2, L3) and the grounding (PE) busbar is close to 0 V.
   - Make sure that the voltage between the drive output terminals (T1/U, T2/V, T3/W) and the grounding (PE) busbar is close to 0 V.
   - Make sure that the voltage between the drive DC busbars (+ and -) and the grounding (PE) busbar is close to 0 V.
6. Install temporary grounding as required by the local regulations.
7. Ask the person in control of the electrical installation work for a permit to work.

General notes

Static electricity

WARNING!
Use a grounding wristband when you handle printed circuit boards. Do not touch the boards unnecessarily. The boards contain components sensitive to electrostatic discharge.

Optical components

WARNING!
Obey these instructions. If you ignore them, damage to the equipment can occur.

- Handle the fiber optic cables with care.
- When you unplug the fiber optic cables, always hold the connector, not the cable itself.
- Do not touch the ends of the fibers with bare hands as the ends are extremely sensitive to dirt.
- Do not bend the fiber optic cables too tightly. The minimum allowed bend radius is 35 mm (1.4”).

Measuring the insulation

Measuring the insulation of the drive

WARNING!
Do not do any voltage withstand or insulation resistance tests on any part of the drive as testing can damage the drive. Every drive has been tested for insulation between the main circuit and the chassis at the factory. Also, there are voltage-limiting circuits inside the drive which cut down the testing voltage automatically.

Measuring the insulation of the input power cable

Before you connect the input power cable to the drive, measure its insulation according to local regulations.

Connecting the input power cables

Connection diagrams

The following connection diagrams show how connection and grounding of the DSU modules and their switch gear can be arranged.

The switch gear and modules are typically grounded to the frame of the cabinet. If good enough electrical contact for grounding is not possible, a separate grounding wire is needed. It is recommended that the input cable shields are grounded at the cable entry.

D6D, D7D diode supply module

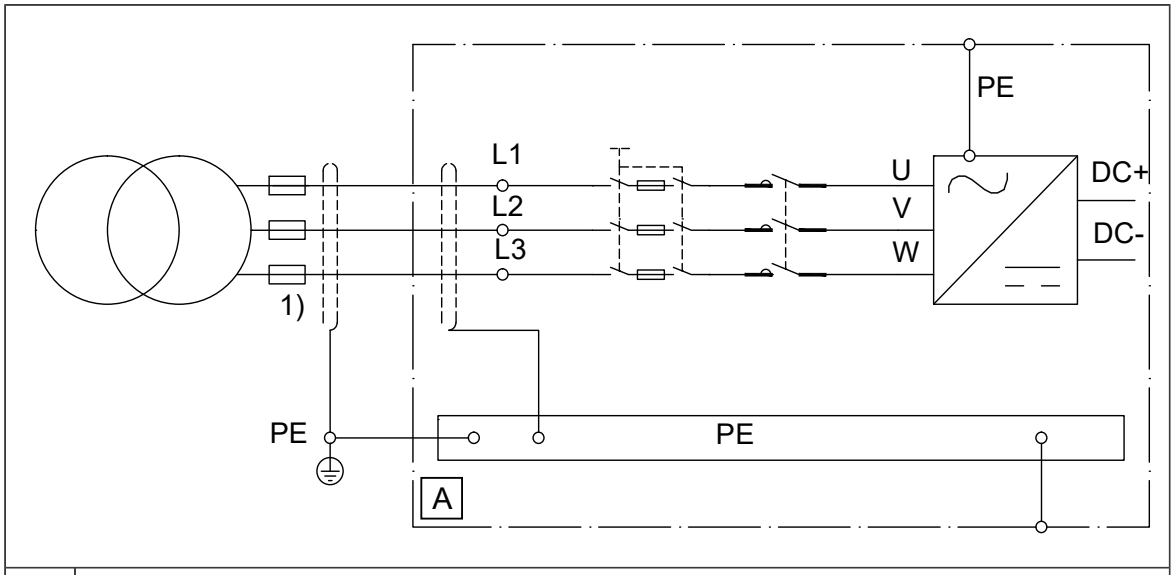

A	Supply module cubicle

1) Fuses or other protection means. Always use fuses for the cabling of the supply unit with the D6D or D7D supply module. For information on the current rating of the fuses and short-circuit withstand strength, see the technical data.

D8D diode supply module

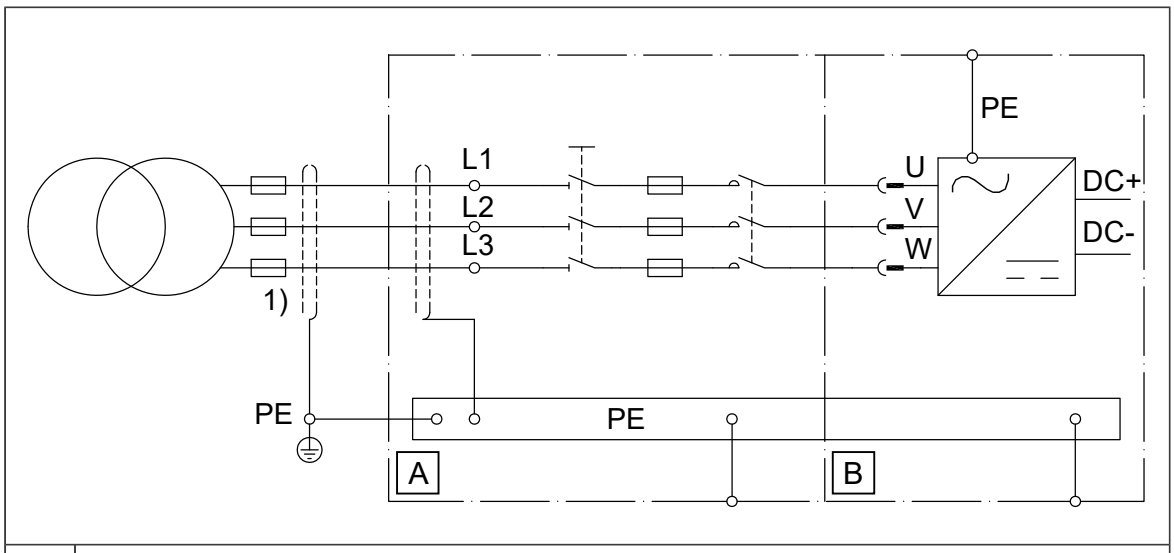

A	Incoming cubicle
B	Supply module cubicle

1) Protect the input cable with fuses if this is demanded due to limited short-circuit withstand capability of the supply unit and/or the input cable. For information on the current rating of the fuses, see the technical data.

Connection procedure of the input power cables (D6D/D7D supply modules)

See the system integrator manuals for connecting the input power cables to the main input busbars/terminals of the cabinet.

Note: The instructions below are based on one example cabinet construction. They are not applicable to all possible solutions but only clarify the principles.

WARNING!
Obey the safety instructions given in *ACS880 multidrive cabinets and modules safety instructions* (3AUA0000102301 [English]). If you ignore the safety instructions, injury or death, or damage to the equipment can occur.

If you are not a qualified electrical professional, do not do installation or maintenance work.

WARNING!
Apply grease to stripped aluminum conductors before attaching them to non-coated aluminum cable lugs. Obey the grease manufacturer's instructions. Aluminum-aluminum contact can cause oxidation in the contact surfaces.

1. Lead the cables into the inside of the cabinet. 360° grounding of the cable shield at the cable entry is recommended to suppress the interference.
2. Twist the cable shields to bundles and connect to cabinet PE (ground) busbar. Connect the separate ground conductors/cables to cabinet PE (ground) busbar.
3. Connect the phase conductors to the input terminals of the main switch-disconnector [Q1]. For tightening torques, see the technical data.
4. Connect the output terminals of the main switch-disconnector [Q1] to the main contactor [Q2] input terminals.
5. Ground the module from the module front plate at top of the module. The grounding point (a) is marked on the module. Connect the frame support bracket (b) on the module front plate with screws. The frame support bracket should have a galvanic connection to the PE busbar through the cabinet frame.

   Note: If the cabinet frame is painted (such as with Rittal VX25 enclosures), it is important to make sure that a good galvanic connection to ground (PE busbar) is achieved. You can, for example, remove the paint from the connection points and use star washers.

   Note: The connection to ground only through the mounting screws and the cabinet chassis is not always good enough. To make sure that the continuity of the protective bonding circuit is sufficient, you can connect the modules to the cabinet PE busbar with a copper busbar or cable. The inductance and impedance of the PE conductor must be rated according to permissible touch voltage appearing under fault conditions (so that the fault point voltage will not rise excessively when a ground fault occurs). See *ACS880 multidrive cabinets and modules electrical planning instructions* (3AUA0000102324 [English]).
6. Connect the contactor [Q2] output terminals to the module input terminals or to the AC connection busbars.
7. Connect the module DC busbars into the cabinet common DC busbars.

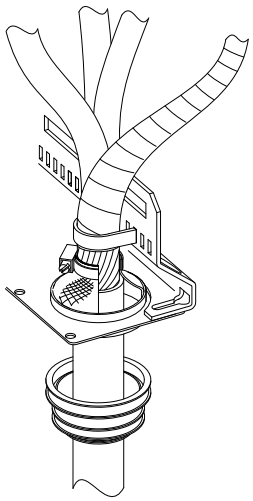 Note that the figure above is an example of a cable entry that has to be acquired by the customer.	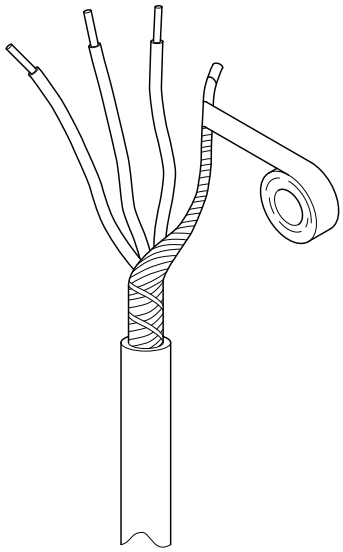

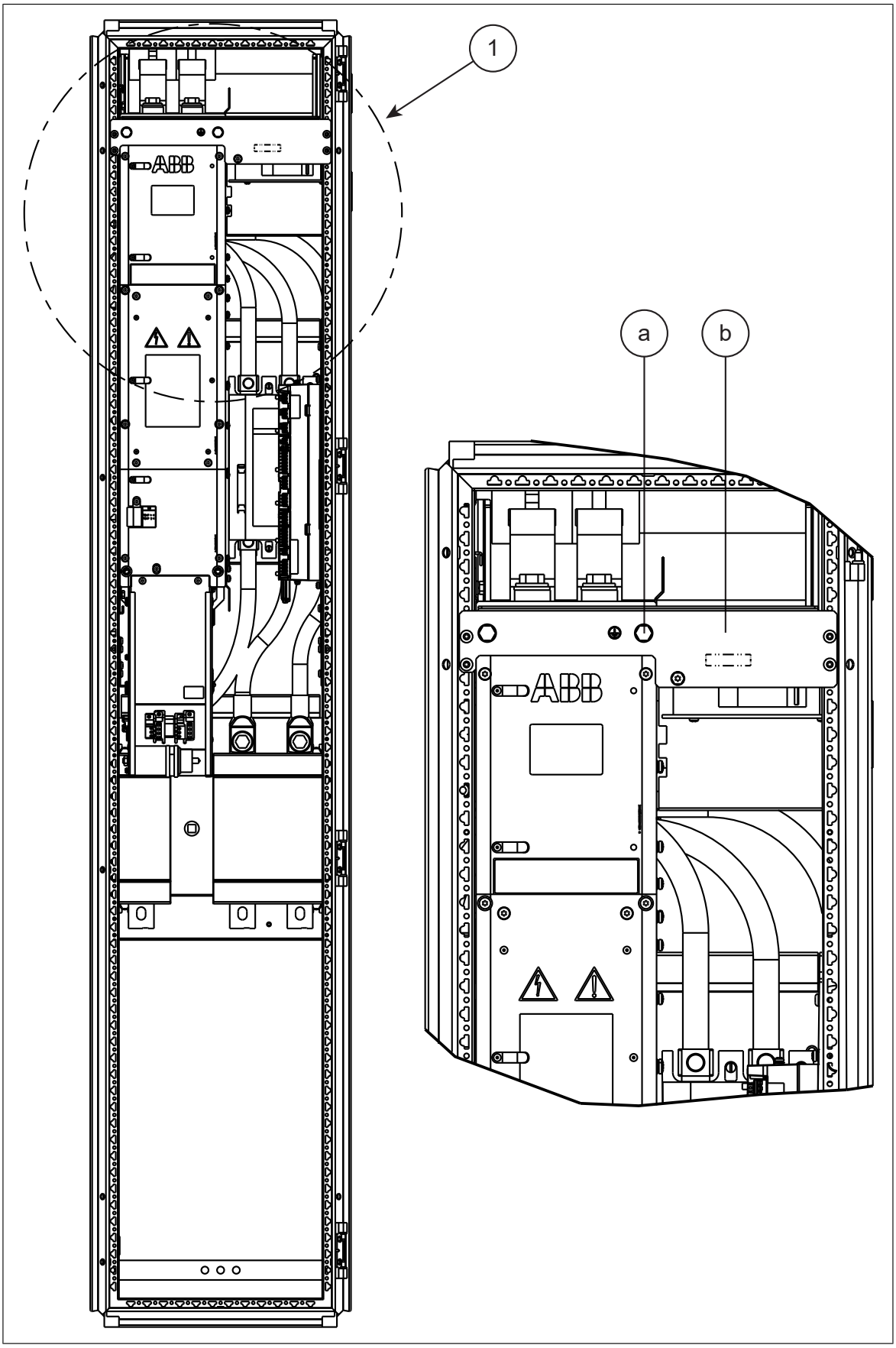
1
a
b

Connection procedure of the input power cables (D8D supply modules)

See the system integrator manuals for connecting the input power cables to the main input busbars/terminals of the cabinet.

Note: The instructions below are based on one example cabinet construction. They are not applicable to all possible solutions but only clarify the principles.

WARNING!
Obey the safety instructions given in *ACS880 multidrive cabinets and modules safety instructions* (3AUA0000102301 [English]). If you ignore the safety instructions, injury or death, or damage to the equipment can occur.

If you are not a qualified electrical professional, do not do installation or maintenance work.

WARNING!
Apply grease to stripped aluminum conductors before attaching them to non-coated aluminum cable lugs. Obey the grease manufacturer's instructions. Aluminum-aluminum contact can cause oxidation in the contact surfaces.

With the D8D supply modules, the input power cables are connected outside the DSU cabinet, typically inside the incoming cubicle.

1. Lead the cables into the inside of the cabinet. 360° grounding of the cable shield at the cable entry is recommended to suppress the interference.
2. Twist the cable shields to bundles and connect to cabinet PE (ground) busbar. Connect the separate ground conductors/cables to cabinet PE (ground) busbar.
3. Connect the phase conductors to the input terminals of the main switch-disconnector [Q1]. For tightening torques, see the technical data.
4. Connect the output terminals of the main switch-disconnector [Q1] to the main fuses [F1.x].
5. Connect the main fuses [F1.x] to the main contactor [Q2] input terminals.
6. Connect the contactor [Q2] output terminals to the AC busbars leading to the DSU cabinet.
7. Inside the DSU cabinet, push the module into the quick connectors.

8. Ground the module from the module front plate at top of the module. The grounding point (a) is marked on the module. Connect the front plate to the frame support bracket (b) with screws. The frame support bracket should have a galvanic connection to the PE busbar through the cabinet frame.

   Note: If the cabinet frame is painted (such as with Rittal VX25 enclosures), it is important to make sure that a good galvanic connection to ground (PE busbar) is achieved. You can, for example, remove the paint from the connection points and use star washers.

   Note: The connection to ground only through the mounting screws and the cabinet chassis is not always good enough. To make sure that the continuity of the protective bonding circuit is sufficient, you can connect the modules to the cabinet PE busbar with a copper busbar or cable. The inductance and impedance of the PE conductor must be rated according to permissible touch voltage appearing under fault conditions (so that the fault point voltage will not rise excessively when a ground fault occurs). See *ACS880 multidrive cabinets and modules electrical planning instructions* (3AUA0000102324 [English]).
9. Connect the module DC busbars into the cabinet common DC busbars.

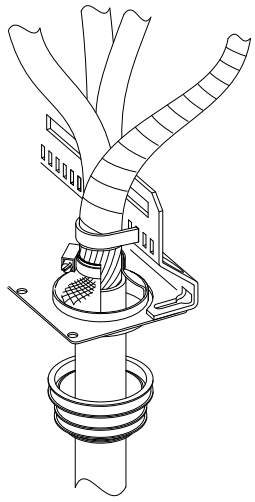 Note that the figure above is an example of a cable entry that has to be acquired by the customer.	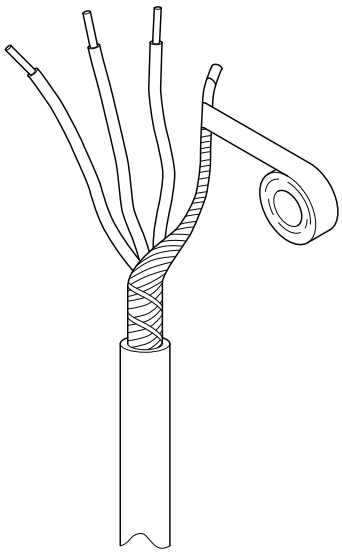

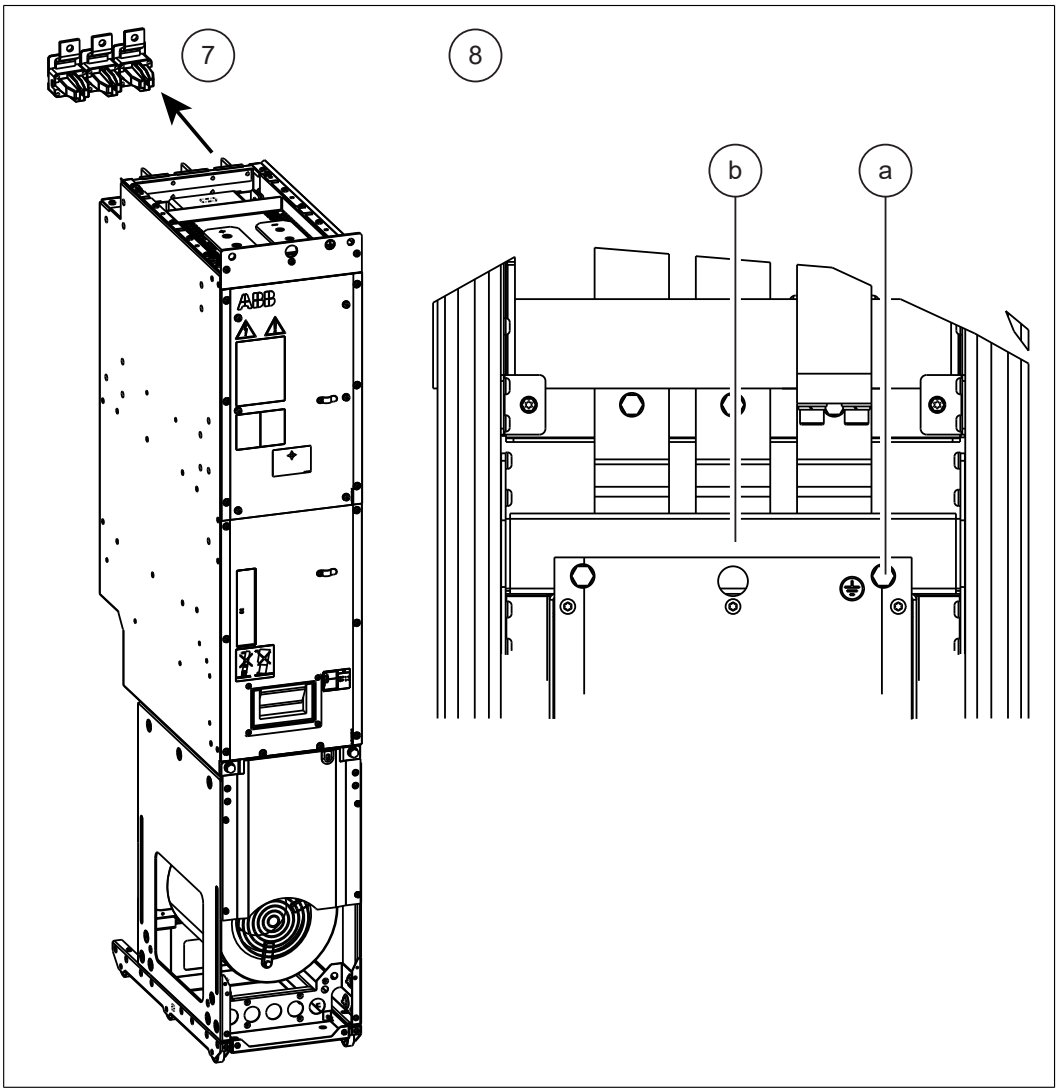

Connecting power supply for the control unit

The system integrator must connect a 24 V DC auxiliary power supply to the ZCU control unit.

See the technical data and chapter *Control units of the drive (page 153)*.

Connection diagram

See the final circuit diagrams by the designer of the cabinet-installed drive.

Connection procedure

WARNING!
Obey the safety instructions given in *ACS880 multidrive cabinets and modules safety instructions* (3AUA0000102301 [English]). If you ignore the safety instructions, injury or death, or damage to the equipment can occur.

If you are not a qualified electrical professional, do not do installation or maintenance work.

1. Disconnect the drive from the AC power line and make sure that it is safe to start the work. Obey the safety instructions in section *Electrical safety precautions (page 72)*.
2. Route the cable. Obey the general routing guidelines in section *Connecting the control cables (page 81)*.
3. Connect the power supply cable:
   - Connect the other end of the cable to terminal XPOW on control unit.
   - Connect the other end of the cable to the power source.

Connecting power supply for the module fan

The system integrator must connect a 230 V AC power supply for the module fan to connector X7. For the location of connector X7, see *Layout drawings of the supply modules (page 22)*.

Connection diagram

See the final circuit diagrams by the designer of the cabinet-installed drive.

Connecting the control cables

See the chapter on control units for the default I/O connections. Note that the default I/O connections can be affected by some options. See the circuit diagrams delivered with the drive for the actual wiring.

Control cable connection procedure

WARNING!
Obey the safety instructions given in *ACS880 multidrive cabinets and modules safety instructions* (3AUA0000102301 [English]). If you ignore the safety instructions, injury or death, or damage to the equipment can occur.

If you are not a qualified electrical professional, do not do installation or maintenance work.

1. Stop the drive (if running) and do the steps in section *Electrical safety precautions (page 72)* before you start the work.
2. Run the control cables into the cabinet as described in section *Grounding the outer shields of the control cables at the cabinet entry* below.
3. Route the control cables as described in section *Routing the control cables inside the cabinet*.
4. Connect the control cables as described in section *Connecting control cabling*.

Grounding the outer shields of the control cables at the cabinet entry

Ground the outer shields of all control cables 360 degrees at the EMI conductive cushions as follows (example constructions are shown below, the actual hardware may vary):

1. Loosen the tightening screws of the EMI conductive cushions and pull the cushions apart.
2. Cut adequate holes to the rubber grommets in the entry plate and put the cables through the grommets and the cushions.

3. Strip off the cable plastic sheath above the entry plate just enough to ensure proper connection of the bare shield and the EMI conductive cushions.
4. Tighten the two tightening screws so that the EMI conductive cushions press tightly round the bare shield.

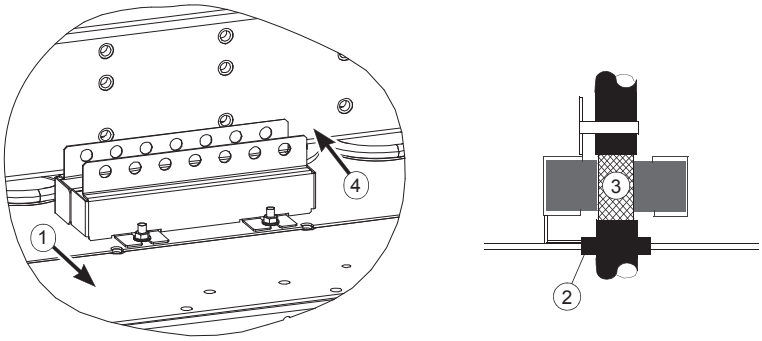

Note 1: Keep the shields continuous as close to the connection terminals as possible. Secure the cables mechanically at the entry strain relief.

Note 2: If the outer surface of the shield is non-conductive:

- Cut the shield at the midpoint of the bare part. Be careful not to cut the conductors or the grounding wire (if present).
- Turn the shield inside out to expose its conductive surface.
- Cover the turned shield and the stripped cable with copper foil to keep the shielding continuous.

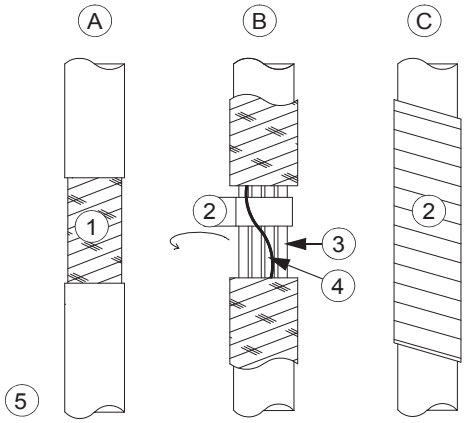

A	Stripped cable
B	Conductive surface of the shield exposed
C	Stripped part covered with copper foil
1	Cable shield
2	Copper foil
3	Shielded twisted pair
4	Grounding wire

Note for top entry of cables: When each cable has its own rubber grommet, sufficient IP and EMC protection can be achieved. However, if very many control cables come to one cabinet, plan the installation beforehand as follows:

1. Make a list of the cables coming to the cabinet.
2. Sort the cables going to the left into one group and the cables going to the right into another group to avoid unnecessary crossing of cables inside the cabinet.
3. Sort the cables in each group according to size.

4. Group the cables for each grommet as follows ensuring that each cable has a proper contact to the cushions on both sides.

Cable diameter in mm	Max. number of cables per grommet
≤ 13	4
≤ 17	3
< 25	2
≥ 25	1

5. Arrange the bunches according to size from thickest to the thinnest between the EMI conductive cushions.

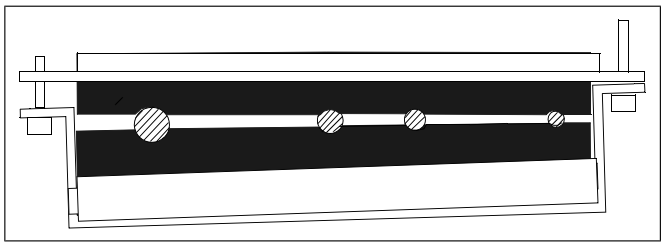

6. If more than one cable go through a grommet, seal the grommet by applying Loctite 5221 (catalogue number 25551) inside the grommet.

Routing the control cables inside the cabinet

Use the existing trunking in the cabinet wherever possible. Use sleeving if cables are laid against sharp edges. When running cables to or from a swing-out frame, leave enough slack at the hinge to allow the frame to open fully.

Connecting control cabling

Connect the conductors to the appropriate terminals. Refer to the wiring diagrams delivered with the drive.

Connect the inner twisted pair shields and all separate grounding wires to the grounding clamps closest to the terminals.

The drawing below represents the grounding of the control cabling when connecting to a terminal block inside the cabinet. The grounding is done in the same way when connecting directly to a component such as the control unit.

Notes:

- Do not ground the outer shield of the cable here since it is grounded at the cable entry.
- Keep any signal wire pairs twisted as close to the terminals as possible. Twisting the wire with its return wire reduces disturbances caused by inductive coupling.

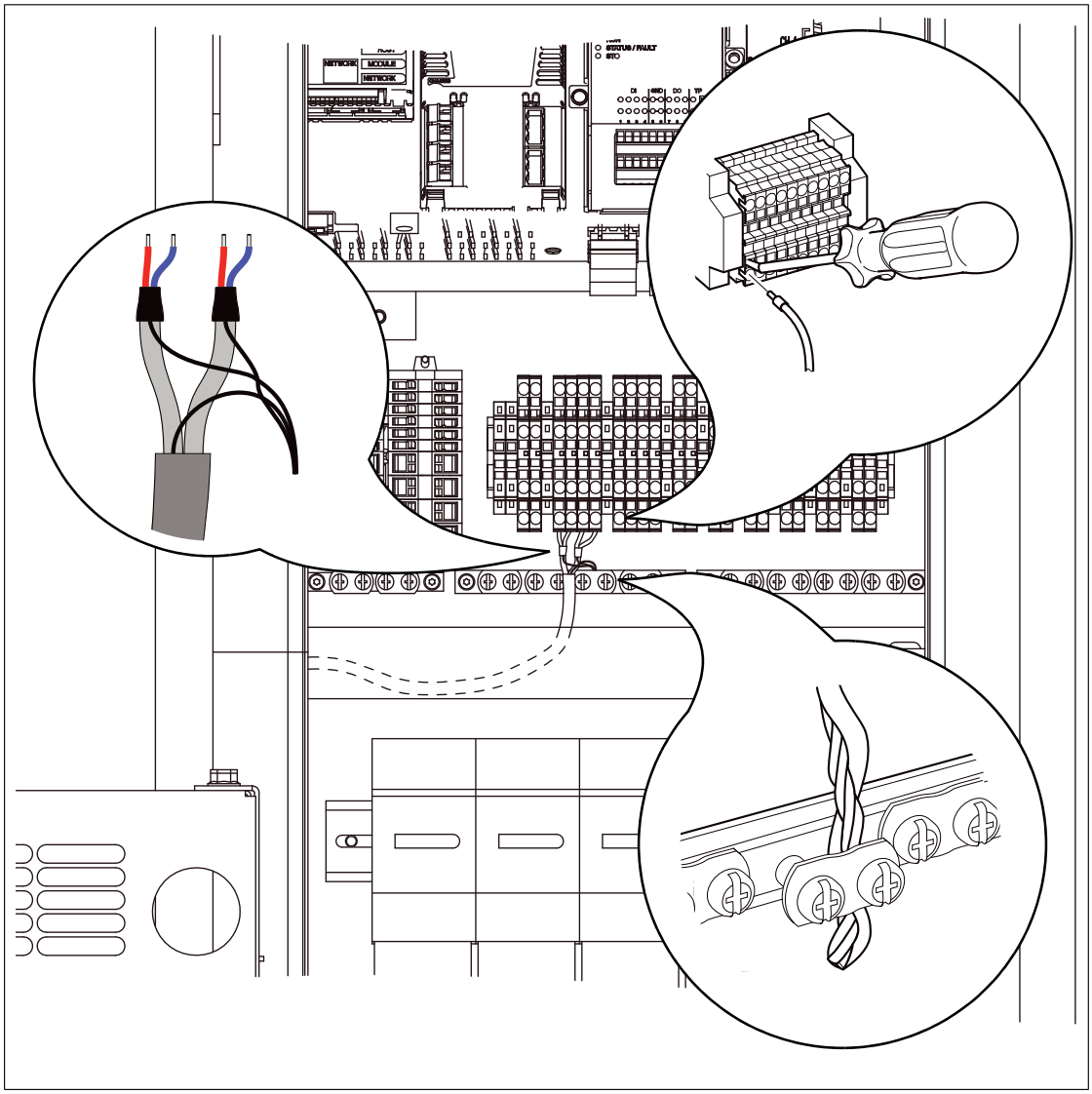

At the other end of the cable, leave the shields unconnected or ground them indirectly via a high-frequency capacitor with a few nanofarads, eg. 3.3 nF / 630 V. The shield can also be grounded directly at both ends if they are in the same ground line with no significant voltage drop between the end points.

Connecting a PC

WARNING!
Do not connect the PC directly to the control panel connector of the control unit as this can cause damage.

A PC (with eg, the Drive composer PC tool) can be connected as follows:

1. Connect an ACx-AP-x control panel to the unit either
   - by inserting the control panel into the panel holder or platform, or
   - by using an Ethernet (eg, Cat 5e) networking cable.
2. Remove the USB connector cover on the front of the control panel.
3. Connect an USB cable (Type A to Type Mini-B) between the USB connector on the control panel (3a) and a free USB port on the PC (3b).
4. The panel will display an indication whenever the connection is active.
5. See the documentation of the PC tool for setup instructions.

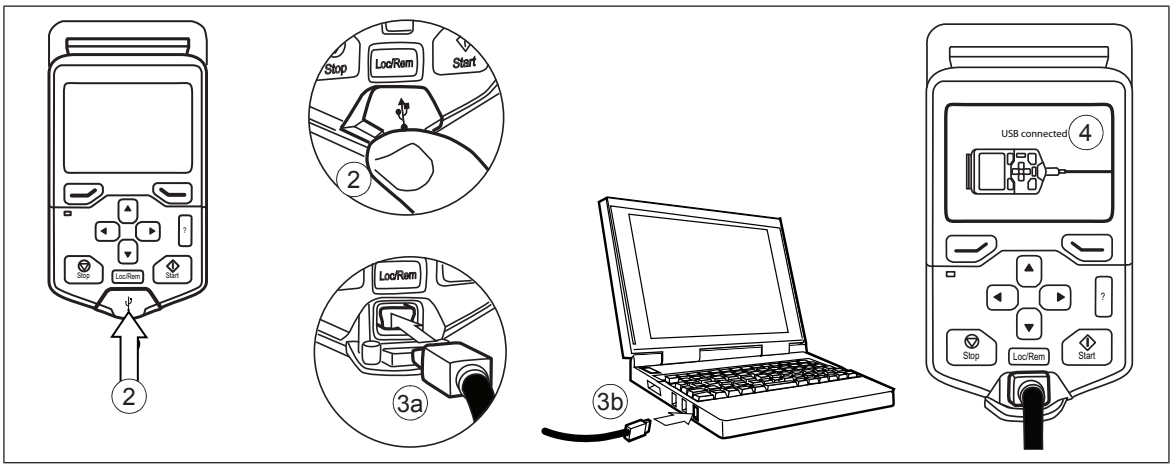

6

Installation checklist of the drive

Contents of this chapter

This chapter contains a checklist of the mechanical and electrical installation of the drive.

Checklist

Examine the mechanical and electrical installation of the drive before start-up. Go through the checklist together with another person.

WARNING!
Obey the safety instructions of the drive. If you ignore them, injury or death, or damage to the equipment can occur.

If you are not a qualified electrical professional, do not do installation or maintenance work.

WARNING!
Stop the drive and do the steps in section *Electrical safety precautions (page 72)* before you start the work.

Make sure that …	☑
The ambient operating conditions meet the drive ambient conditions specification, and enclosure rating (IP code or UL enclosure type).	☐
The supply voltage matches the nominal input voltage of the drive. See the type designation label.	☐
The insulation resistance of the input power cable, motor cable and motor is measured according to local regulations.	☐
The drive cabinet is attached to the floor, and if necessary due to vibration etc, also by its top to the wall or roof.	☐
The drive module is fastened properly to the cabinet.	☐

Make sure that …	☑
The cooling air flows freely in and out of the drive. Air recirculation inside the cabinet is not be possible (air baffle plates are on place, or there is another air guiding solution).	☐
If the drive is connected to a network other than a symmetrically grounded TN-S system: You have done all the required modifications (for example, you may need to disconnect the EMC filter or ground-to-phase varistor). See the electrical installation instructions in the supply unit manual.	☐
The enclosures of the equipment in the cabinet have proper galvanic connection to the cabinet protective earth (ground) busbar; The connection surfaces at the fastening points are bare (unpainted) and the connections are tight, or separate grounding conductors have been installed.	☐
The main circuit connections inside the drive cabinet correspond to the circuit diagrams.	☐
The control unit has been connected. See the circuit diagrams.	☐
Appropriate AC fuses and main disconnector are installed.	☐
There is an adequately sized protective earth (ground) conductor(s) between the drive and the switchboard, the conductor is connected to correct terminal, and the terminal is tightened to the correct torque. Proper grounding has also been measured according to the regulations.	☐
The input power cable is connected to the correct terminals, the phase order is correct, and the terminals are tightened to the correct torque.	☐
There is an adequately sized protective earth (ground) conductor between the motor and the drive, and the conductor is connected to the correct terminal, and the terminal is tightened to the correct torque. Proper grounding has also been measured according to the regulations.	☐
The motor cable is connected to the correct terminals, the phase order is correct, and the terminals are tightened to the correct torque.	☐
The motor cable is routed away from other cables.	☐
No power factor compensation capacitors are connected to the motor cable.	☐
Proper grounding has also been measured according to the regulations.	☐
The control cables are connected to the correct terminals, and the terminals are tightened to the correct torque.	☐
If a drive bypass connection will be used: The direct-on-line contactor of the motor and the drive output contactor are either mechanically and/or electrically interlocked, that is, they cannot be closed at the same time. A thermal overload device must be used for protection when bypassing the drive. Refer to local codes and regulations.	☐
There are no tools, foreign objects or dust from drilling inside the drive.	☐
The area in front of the drive is clean: the drive cooling fan cannot draw any dust or dirt inside.	☐
Cover(s) of the motor connection box are in place. Cabinet shrouds are in place and doors are closed.	☐
The motor and the driven equipment are ready for power-up.	☐

7

Start-up

Contents of this chapter

This chapter contains start-up instructions of the diode supply unit.

The underlined tasks are necessary only for certain cases. The symbols in brackets, for example [Q1], refer to the item designations used in the circuit diagrams. If a task is valid only for a certain option device or feature, the option code is given in brackets, for example, (option +F259).

Note: The instructions do not cover all possible cabinet constructions.

Note: The start-up instructions for functional safety features are not given in this chapter. The designer of the cabinet-installed drive is responsible for the instructions of testing the functional safety systems.

WARNING!
Obey the safety instructions during the start-up procedure. See *ACS880 multidrive cabinets and modules safety instructions* (3AUA0000102301 [English]). If you ignore the safety instructions, injury or death, or damage to the equipment can occur.

If you are not a qualified electrical professional, do not do installation or maintenance work.

WARNING!
Before you activate the automatic fault reset or automatic restart functions of the drive control program, make sure that no dangerous situations can occur. These functions reset the drive automatically and continue operation after a fault or supply break. If these functions are activated, the installation must be clearly marked as defined in IEC/EN 61800-5-1, subclause 6.5.3, for example, “THIS MACHINE STARTS AUTOMATICALLY”. If you select an external source for the start command and it is on, the drive will start immediately after fault reset. See the firmware manual.

Start-up procedure

Action	☑
Basic checks with no voltage connected	
Disconnect all dangerous voltages from the drive and make sure that it is safe to start the work. Do the steps in section *Electrical safety precautions (page 72)*.	☐
Make sure that the mechanical and electrical installation of the drive is completed. See *Installation checklist of the drive (page 87)*.	☐
Check the settings of breakers/switches in the auxiliary circuits.	☐
If time relays, or relays with delayed make-contact or break-contact are used, for example, in emergency stop circuits, check the relay time settings. See the delivery-specific circuit diagrams and safety function specific documentation (if applicable).	☐
Make sure that both circuits of the XSTO connector are closed for the supply unit to start. (IN1 and IN2 must be connected to OUT.) The control program enables the start/stop control only with both circuits closed. See delivery-specific circuit diagrams and safety function specific documentation (if applicable).	☐
Connecting voltage to input terminals and auxiliary circuit	
Make sure that it is safe to connect voltage: • nobody is working on the unit or circuits that are wired from outside into the cabinets • covers of the motor terminal boxes are on • the disconnecting device [Q1] is open.	☐
Remove the temporary grounding system (if installed).	☐
Close the circuit breakers supplying the auxiliary circuits [F22, …, F26].	☐
Close the cabinet doors.	☐
Close the main breaker of the supply transformer.	☐
Close the auxiliary voltage switch [Q21].	☐
Setting the supply unit parameters	
Supply modules with option +C188 (direct-on-line cooling fan): Set bit 13 of parameter *195.20 HW options word 1*.	☐

Action	☑
As standard, the ACS880-304…+A003 diode supply module does not need a charging circuit or a circuit for the DC link voltage measurement. See the operation principle and hardware description. In this case, make sure that parameter *195.01 Supply voltage* value is *Not given*. If you have equipped the supply unit with a separate, external charging circuit: • Set the correct voltage range with parameter *195.01 Supply voltage*. • Set parameter *120.30 External charge* to *Enable*. For tuning the charging function, contact ABB.	☐
Switch the control panel to the remote mode (Loc/Rem key) to enable control of the supply unit with the operating switch [S21].	☐
Switching the supply unit on	
If the drive is equipped with a brake chopper: Make sure that there are inverters connected to the DC bus before closing the main contactor. A rule of thumb: The sum capacitance of the inverters connected to the DC bus of the drive must be at least 50% of the sum capacitance of all inverters of the drive. If there is not enough capacitive load at start, the DC voltage can exceed the overvoltage limit, causing immediate start of the brake unit and continuous supply for it by the supply unit. Continuous braking will overload brake choppers and resistors and cause overheating.	☐
Unlock the main switch-disconnector [Q1] and turn it into the closed position.	☐
Turn the operating switch [S21] to *on* (1) position to activate the Run enable signal and to close the main contactor [Q2].	☐
On-load checks	
Make sure that the supply module cooling fan [G41] rotates freely in the right direction.	☐
Validate the operation of safety functions (for example, emergency stop). **WARNING!** The safety functions are not safe before they are validated according to the instructions. See the function-specific manual for the validation tasks. Safety functions are optional. See the function-specific manual for the validation tasks.	☐

Switching the supply unit off

1. Stop the motors connected to inverter units.
2. Turn the operating switch [S21] to the *off* (0) position to deactivate the Run enable signal and to switch off the main contactor [Q2].

Disconnecting and temporary grounding the drive

See *Electrical safety precautions (page 72)*.

8

Maintenance

Contents of this chapter

This chapter instructs how to maintain the diode supply module and how to interpret its fault indications. The information is valid for ACS880-304…+A003 diode supply modules and example cabinet installations of the modules.

Note: The instructions do not cover all possible cabinet instructions.

Obey the safety instructions of the drive. If you ignore them, injury or death, or damage to the equipment can occur.

If you are not a qualified electrical professional, do not do installation or maintenance work.

Maintenance intervals

The table below shows the maintenance tasks which can be done by the end user. The complete maintenance schedule is available on the Internet (www.abb.com/drivesservices). For more information, consult your local ABB Service representative (www.abb.com/searchchannels).

Component	Years from start-up												
	1	2	3	4	5	6	7	8	9	10	11	12	…
Cooling													
Main cooling fan, D6D to D7D/D7T direct on line 50 Hz									R				
Main cooling fan, D6D to D7D/D7T direct on line 60 Hz									R				
Main cooling fan, D8D, 50/60 Hz									R				
Cabinet cooling fan, internal, 50 Hz									R				
Cabinet cooling fan, internal, 60 Hz						R						R	
Cabinet cooling fan, door, 50/60 Hz									R				
Cabinet cooling fan, IP54, 50 Hz									R				
Cabinet cooling fan, IP54, 60 Hz						R						R	
Batteries													
Control panel battery									R				
Control unit battery						R						R	
Connections and environment													
Air inlet and outlet meshes (IP22/IP42)	I	I	I	I	I	I	I	I	I	I	I	I	I
Cabinet door filters (IP54)	R	R	R	R	R	R	R	R	R	R	R	R	R
Tightness of terminals	I	I	I	I	I	I	I	I	I	I	I	I	I
Ambient conditions (dustiness, moisture, corrosion, temperature)	I	I	I	I	I	I	I	I	I	I	I	I	I
Cleaning of heatsinks	I	I	I	I	I	I	I	I	I	I	I	I	I
Quality of supply voltage	P	P	P	P	P	P	P	P	P	P	P	P	P
Air circuit breaker maintenance (if present)	I	I	I	I	I	I	I	I	I	I	I	I	I
Spare parts													
Spare part stock	I	I	I	I	I	I	I	I	I	I	I	I	I
Reforming DC circuit capacitors (spare modules and spare capacitors)	P	P	P	P	P	P	P	P	P	P	P	P	P

Symbols

I **Inspection** (visual inspection and maintenance action if needed)

P **Performance** of on/off-site work (commissioning, tests, measurements or other work)

R **Replacement**

Maintenance and component replacement intervals are based on the assumption that the equipment is operated within the specified ratings and ambient conditions. ABB recommends annual drive inspections to ensure the highest reliability and optimum performance.

Note: Long term operation near the specified maximum ratings or ambient conditions may require shorter maintenance intervals for certain components. Consult your local ABB Service representative for additional maintenance recommendations.

Cabinet

Cleaning the interior of the cabinet

WARNING!
Obey the safety instructions given in *ACS880 multidrive cabinets and modules safety instructions* (3AUA0000102301 [English]). If you ignore the safety instructions, injury or death, or damage to the equipment can occur.

If you are not a qualified electrical professional, do not do installation or maintenance work.

WARNING!
Use a vacuum cleaner with antistatic hose and nozzle, and wear a grounding wristband. Using a normal vacuum cleaner creates static discharges which can damage circuit boards.

1. Stop the drive and do the steps in section *Electrical safety precautions (page 72)* before you start the work.
2. Open the cabinet door.
3. Clean the interior of the cabinet. Use a vacuum cleaner and a soft brush.
4. Clean the air inlets of the fans and air outlets of the modules (top).
5. Clean the air inlet gratings (if any) on the door.
6. Close the door.

Cleaning the door air inlets (IP22 and IP42)

Check the dustiness of the air inlet meshes. If the dust cannot be removed by vacuum cleaning from outside through the grating holes with a small nozzle, proceed as follows:

1. Stop the drive and do the steps in section *Electrical safety precautions (page 72)* before you start the work.
2. Remove the fasteners at the top of the grating.
3. Lift the grating and pull it away from the door.
4. Vacuum clean or wash the grating on both sides.
5. Reinstall the grating in reverse order.

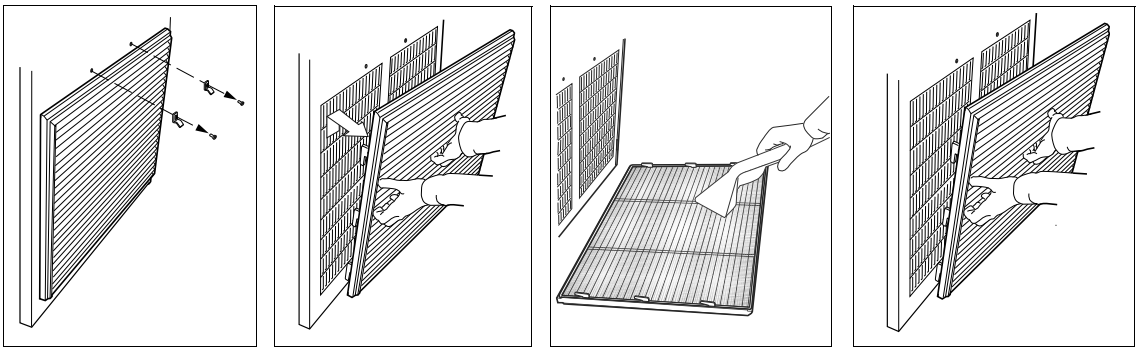

Power connections

Retightening the power connections

WARNING!
Obey the safety instructions given in *ACS880 multidrive cabinets and modules safety instructions* (3AUA0000102301 [English]). If you ignore the safety instructions, injury or death, or damage to the equipment can occur.

If you are not a qualified electrical professional, do not do installation or maintenance work.

1. Stop the drive and do the steps in section *Electrical safety precautions (page 72)* before you start the work.
2. Examine the tightness of the cable connections. Use the tightening torques given in the technical data.

Fuses

Checking and replacing the module DC fuses

WARNING!
Obey the safety instructions given in *ACS880 multidrive cabinets and modules safety instructions* (3AUA0000102301 [English]). If you ignore the safety instructions, injury or death, or damage to the equipment can occur.

If you are not a qualified electrical professional, do not do installation or maintenance work.

1. Stop the drive and do the steps in section *Electrical safety precautions (page 72)* before you start the work.
2. Remove the screws of the cover panel. Then remove the cover panel.
3. Examine the fuses and replace if necessary.
4. To replace a fuse, remove the bolts that connect the fuse to the DC busbar. Then remove the fuse.
5. Install the new fuse(s). If there are fuse indicators, make sure that they point to the module to prevent a short-circuit or earth fault with the cover plate.
6. Tighten the fuse bolts. Tightening torque:
   - M8: 22 N·m (16.2 lbf·ft)
   - M10: 42 N·m (31 lbf·ft).
7. Attach the cover panel with screws.

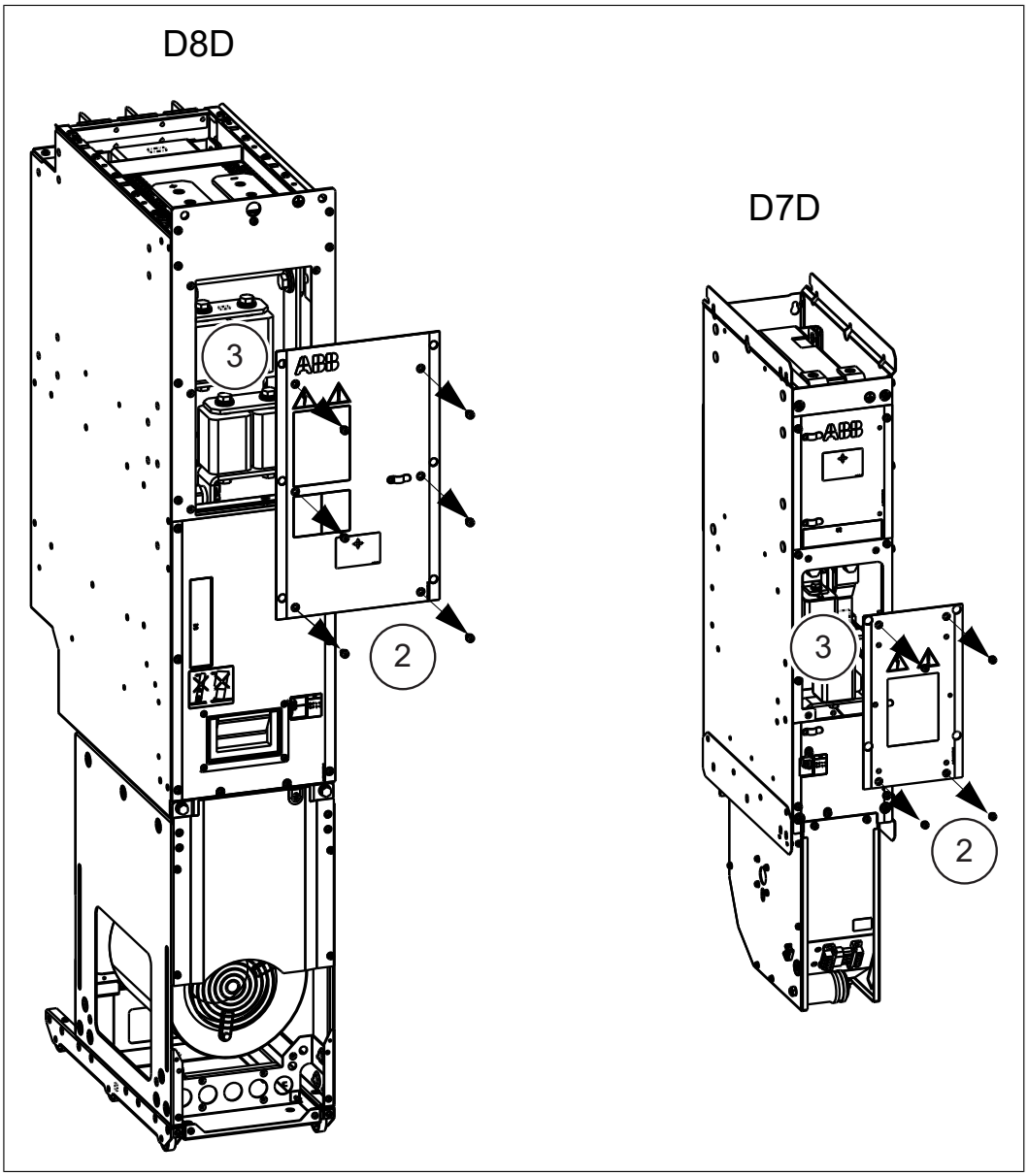

Note: The illustration above shows a D8D (IEC) module, which has two fuses connected in parallel for each DC busbar. D8D modules for UL/CSA (with options +C129 and +C134) have a different type of fuse and only one fuse for each DC busbar.

Checking and replacing the AC fuses

WARNING!
Obey the safety instructions given in *ACS880 multidrive cabinets and modules safety instructions* (3AUA0000102301 [English]). If you ignore the safety instructions, injury or death, or damage to the equipment can occur.

If you are not a qualified electrical professional, do not do installation or maintenance work.

1. Stop the drive and do the steps in section *Electrical safety precautions (page 72)* before you start the work.
2. Open the cubicle door.

3. Remove the shrouds and other equipment that covers the AC fuses.
4. Examine the AC fuses and replace if necessary.
   If you use the AC fuses that ABB recommends (see the ordering information), the supply units with the D6D and D7D modules have blade style fuses that are easy to replace. In the supply units with the D8D modules:
   - Loosen the nuts of the headless screws of the fuses, then slide the fuse block out.
   - Replace the fuses and attach them with the headless screws used with the old fuses.
   - Tighten the headless screws by hand or by applying a maximum force of 5 N·m (3.7 lbf·ft).
   - Tighten the nuts to the torque given in the table:

Nut	Bussmann fuses	Mersen/Ferraz Shawmut fuses
M12	50 N·m (37 lbf·ft)	46 N·m (34 lbf·ft)

5. Install the shrouds and other equipment in reverse order.
6. Close the cubicle door.

Checking and replacing the CVAR board fuses

WARNING!
Obey the safety instructions given in *ACS880 multidrive cabinets and modules safety instructions* (3AUA0000102301 [English]). If you ignore the safety instructions, injury or death, or damage to the equipment can occur.

If you are not a qualified electrical professional, do not do installation or maintenance work.

1. Stop the drive and do the steps in section *Electrical safety precautions (page 72)* before you start the work.
2. Examine the fuses and replace if necessary.

Note: The CVAR board is used in UL/CSA installations.

Fan

The lifespan of the cooling fans of the drive depends on the running time, ambient temperature and dust concentration. See the firmware manual for the actual signal which indicates the running time of the cooling fan. Reset the running time signal after fan replacement.

Replacement fans are available from ABB. Do not use other than ABB specified spare parts.

Replacing the fan of the supply module

WARNING!
Obey the safety instructions given in *ACS880 multidrive cabinets and modules safety instructions* (3AUA0000102301 [English]). If you ignore the safety instructions, injury or death, or damage to the equipment can occur.

If you are not a qualified electrical professional, do not do installation or maintenance work.

WARNING!
Use the required personal protective equipment. Wear protective gloves and long sleeves. Some parts have sharp edges.

1. Stop the drive and do the steps in section *Electrical safety precautions (page 72)* before you start the work.
2. Open the cubicle door.
3. If there are shrouds, remove them.
4. Remove the screws of the fan.
5. Disconnect the power supply wires. In the D6D module, the plug is on the right side of the fan.
6. Pull out the fan.
7. Install the new fan in reverse order.

Replacing the cabinet cooling fan

WARNING!
Obey the safety instructions of the drive. If you ignore them, injury or death, or damage to the equipment can occur.

1. Stop the drive and do the steps in section *Electrical safety precautions (page 72)* before you start the work.
2. Remove the shrouding (if any) in front of the fan.
3. Disconnect the fan wiring (a).
4. Remove the fastening screws (a) and finger guard (b) of the fan.
5. Install the new fan in reverse order. Make sure that the arrow indicating the air flow direction points up.

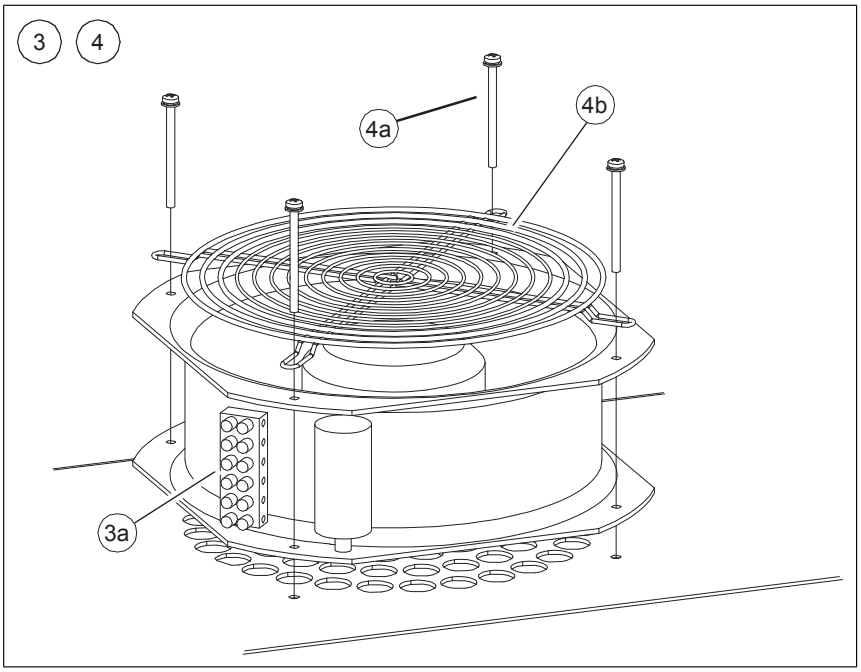

Supply module

WARNING!
Obey the safety instructions given in *ACS880 multidrive cabinets and modules safety instructions* (3AUA0000102301 [English]). If you ignore the safety instructions, injury or death, or damage to the equipment can occur.

If you are not a qualified electrical professional, do not do installation or maintenance work.

WARNING!
Incorrect lifting can cause danger or damage. Obey the local laws and regulations applicable to lifting, such as requirements for planning the lift, for capacity and condition of lifting equipment, and for training of personnel.

WARNING!
Use extreme caution when maneuvering the supply module. It is heavy and has a high center of gravity. Ignoring the following instructions can cause physical injury, or damage to the equipment.

WARNING!
Use the required personal protective equipment. Wear protective gloves and long sleeves. Some parts have sharp edges.

Replacing the D6D and D7D supply module

Note: The ACS880-307…+A003 supply unit with the D7D supply module is used here as an example.

1. Stop the drive and do the steps in section *Electrical safety precautions (page 72)* before you start the work.
2. Open the cubicle door.
3. Remove the screws of the shroud in the lower part of the cubicle, then remove the shroud.
4. Remove the screws of the shroud in the middle, then remove the shroud.
5. Remove the module fan. For the instructions, see section *Replacing the fan of the supply module (page 99)*.
6. Remove the screws of the bar that is in front of the module and cabinet fan. Also remove the screws that attach the fan installation plate to the bar. Remove the bar.
7. Remove the cabinet fan.
8. Remove the module fastening screws.
9. Remove the bolts that attach the module to the DC busbars. If necessary, loosen the bolts used for DC busbar height adjustment.
10. Remove the bolts that attach the module to the AC busbars.
11. Disconnect the cable for the temperature protection circuit [X1] in the front of the module (if used).
12. Pull the module out enough to attach a lifting chain to chain holes at the top of the module. For information on the lifting device for the Rittal VX25 enclosure, see section *Lifting device for the D6D and D7D supply modules (page 104)*.

13. Pull the module out.
14. Install the new module:
    - Push the module in until you can safely remove the lifting chain. Remove the lifting chain, then push the module in.
    - Install and tighten the module fastening screws.
    - Tighten the bolts that attach the module to the DC busbars to 70 N·m (51.6 lbf·ft). For D6D modules, the tightening torque for the DC busbar M8 bolts is 22 N·m (16.2 lbf·ft).
    - Tighten the bolts used for DC busbar height adjustment to 70 N·m (51.6 lbf·ft).
    - Tighten the bolts that attach the module to the AC busbars to 70 N·m (51.6 lbf·ft).
    - Attach the upper bar to the front of the module.
    - Install the cabinet fan to its place.
    - Install the module fan.
    - Install the shrouds.
    - Connect the cable for the temperature protection circuit [X1].
    - Close the door.

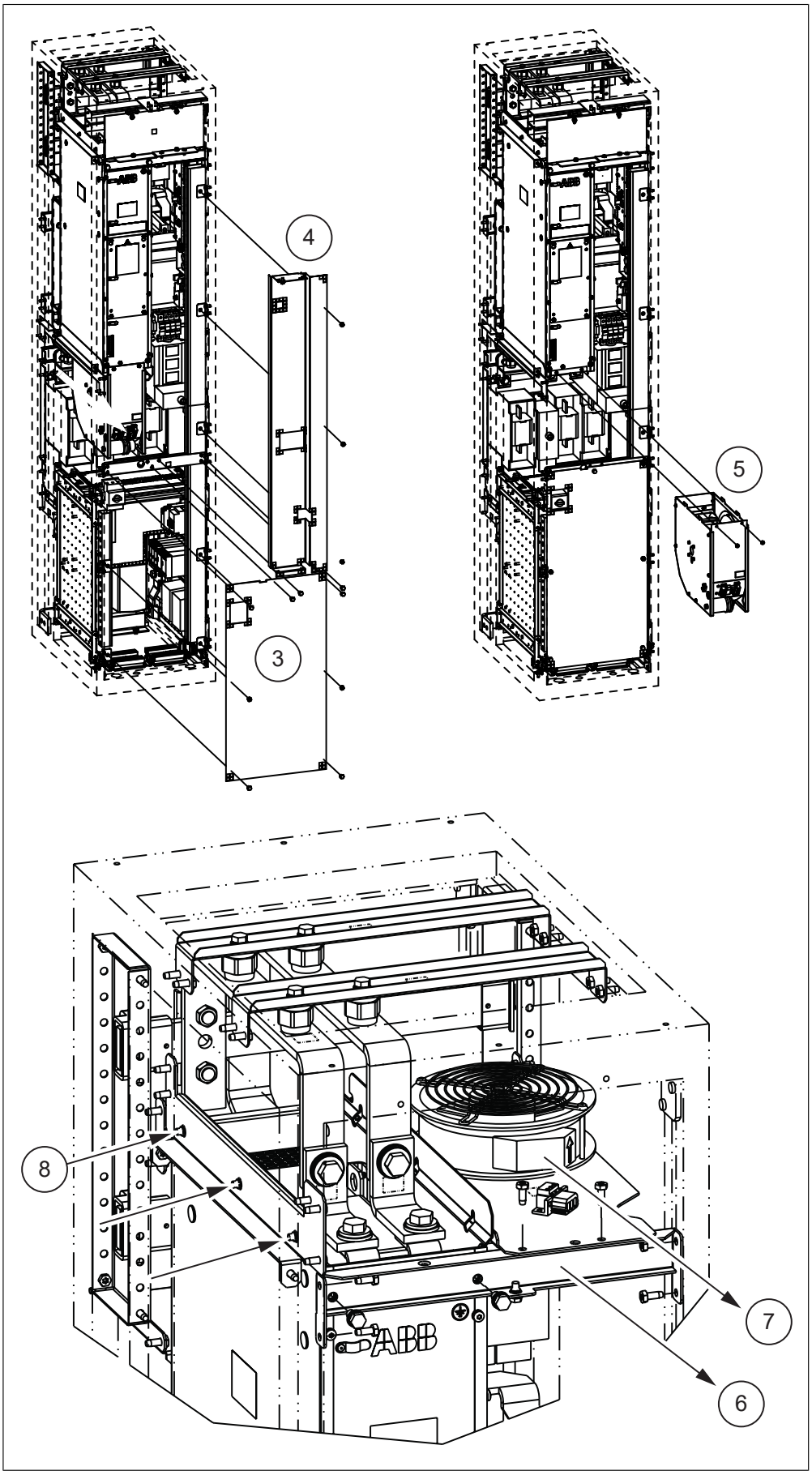
4
3
5
8
7
6

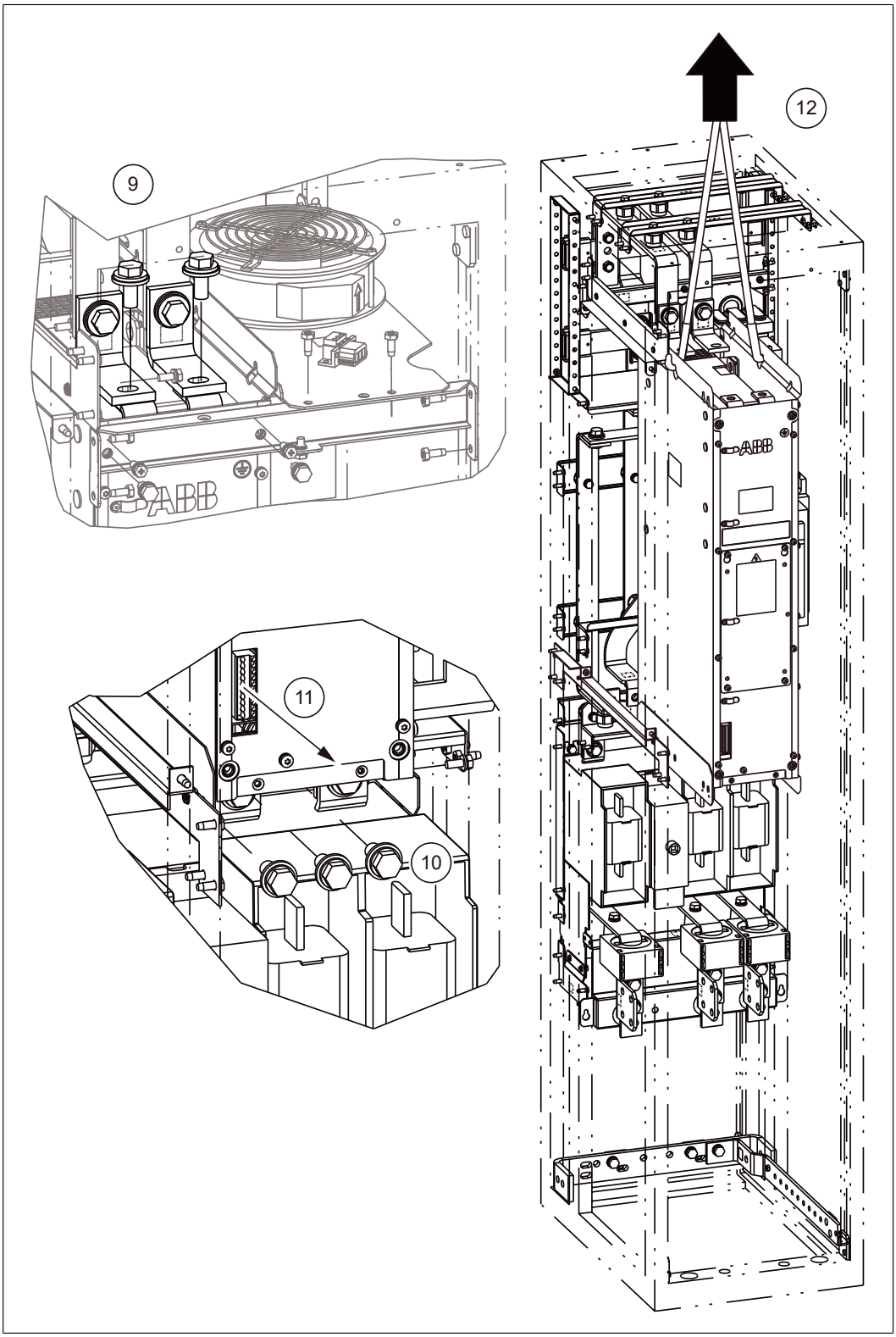

Lifting device for the D6D and D7D supply modules

You can order a lifting device for the D6D and D7D supply modules from ABB. For the ordering information, see section *X6X/X7X lifting device (page 118)*. You can install the lifting device to the Rittal VX25 enclosure.

The lifting device package includes the assembly instructions (3AXD50000439409).

Replacing the D8D supply module

Module handling

- Do not use the module extraction/installation ramp with plinth heights which exceeds the maximum allowed height.
- Secure the module extraction/installation ramp carefully.
- Push the module into the cabinet and pull it from the cabinet carefully preferably with help from another person. Keep a constant pressure with one foot on the base of the module to prevent the module from falling on its back. Keep your fingers away from the edges of the front flange of the module.

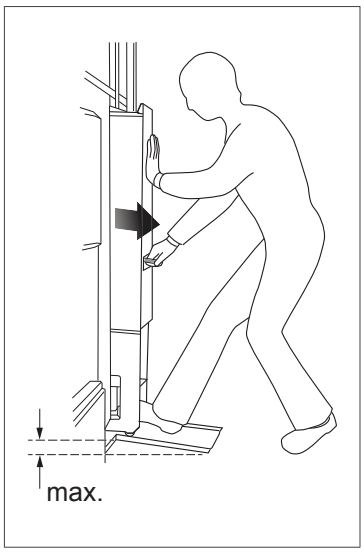

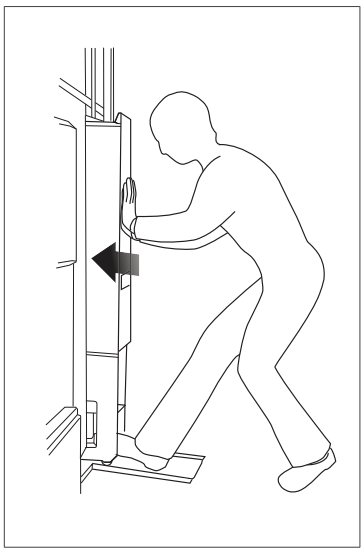

- Be careful when handling a tall module. The module overturns easily because it is heavy and has a high center of gravity. Whenever possible, secure the module with chains. Do not leave an unsupported module unattended especially on a sloping floor.

- Wear protective gloves and long sleeves! Some parts have sharp edges.

Replacing the D8D supply module in the Rittal VX25 enclosure

1. Stop the drive and do the steps in section *Electrical safety precautions (page 72)* before you start the work.
2. Open the door.
3. If there are shrouds, remove them.

4. Disconnect the cable for the temperature protection circuit [X1] (if used) in the front of the module and the power cable of the module fan [X7].
5. Use a module pull out ramp or other lifting device to remove the module from the cabinet. If a ramp is used, install it by placing the hooks of the ramp between the bottom plate and Rittal frame.
6. Remove the module fastening screws, and the bolts that attach the module to the DC busbars.
7. Pull the module carefully out of the cabinet along the ramp or use a lifting device to remove the module.
8. Before installing the new module, clean the contact surfaces of the quick connectors and apply antioxidant joint compound on them.
9. Install the new module:
   - Push the module back in and install the module fastening screws. Tighten the module screws to 22 N·m (16.2 lbf·ft) and the DC busbar bolts to 70 N·m (51.6 lbf·ft).
   - Connect the cable for the temperature protection circuit [X1].
   - Connect the power cable of the module fan [X7].
   - Remove the module pull-out ramp.
   - Install the shrouds (if used).
   - Close the cabinet doors.

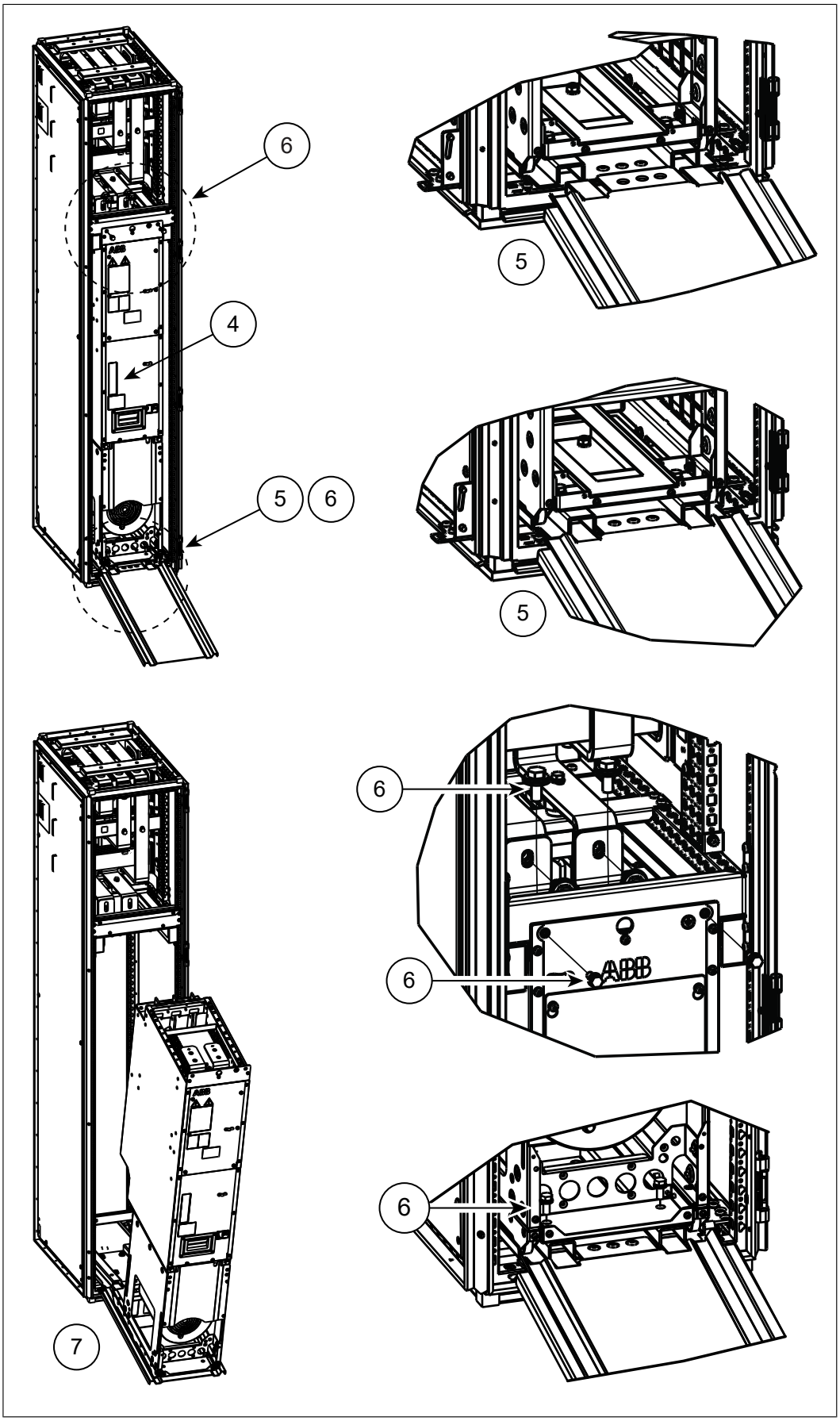
6
4
5
6
5
5
6
6
6
7

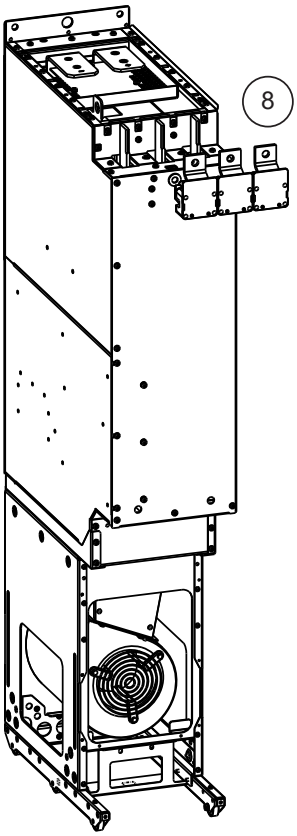	**Note:** The quick connectors are located at the back of the D8D supply module.

Control panel

For detailed information on the control panel, see *ACx-AP-x assistant control panels user's manual* (3AUA0000085685 [English]).

Cleaning the control panel

Use a soft damp cloth to clean the control panel. Avoid harsh cleaners which could scratch the display window.

Replacing the control panel battery

For instructions on how to replace the control panel battery, see *ACx-AP-x assistant control panels user's manual* (3AUA0000085685 [English]).

Control unit

After replacing a drive control unit (or a supply module control unit), the existing parameter settings can be kept by moving the memory unit from the defective unit to the new unit.

Replacing the memory unit

After replacing a control unit, you can keep the existing parameter settings by transferring the memory unit from the defective control unit to the new control unit.

WARNING!
Do not remove or insert the memory unit when the control unit is powered.

1. Stop the drive and do the steps in section *Electrical safety precautions (page 72)* before you start the work.
2. Make sure that the control unit is not powered.
3. Remove the fastening screw and pull the memory unit out.
4. Install a memory unit in reverse order.

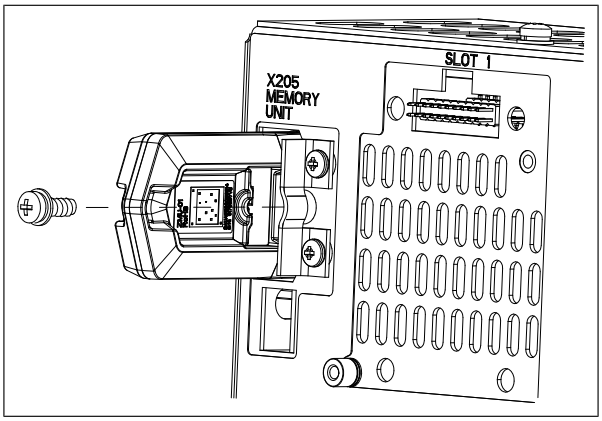

Replacing the ZCU-14 control unit battery

WARNING!
Obey the safety instructions of the drive. If you ignore them, injury or death, or damage to the equipment can occur.

If you are not a qualified electrical professional, do not do installation or maintenance work.

1. Stop the drive and do the steps in section *Electrical safety precautions (page 72)* before you start the work.
2. Remove the M4×8 [T20] screws at the ends of the control unit.
3. To see the battery, remove the XD2D terminal block.
4. Carefully lift the edge of the control unit cover on the side with the I/O terminal blocks.
5. Carefully pull the battery out of the battery holder.
6. Carefully put a new CR2032 battery into the battery holder.
7. Close the control unit cover.
8. Tighten the M4×8 [T20] screws.
9. Install the XD2D terminal block.

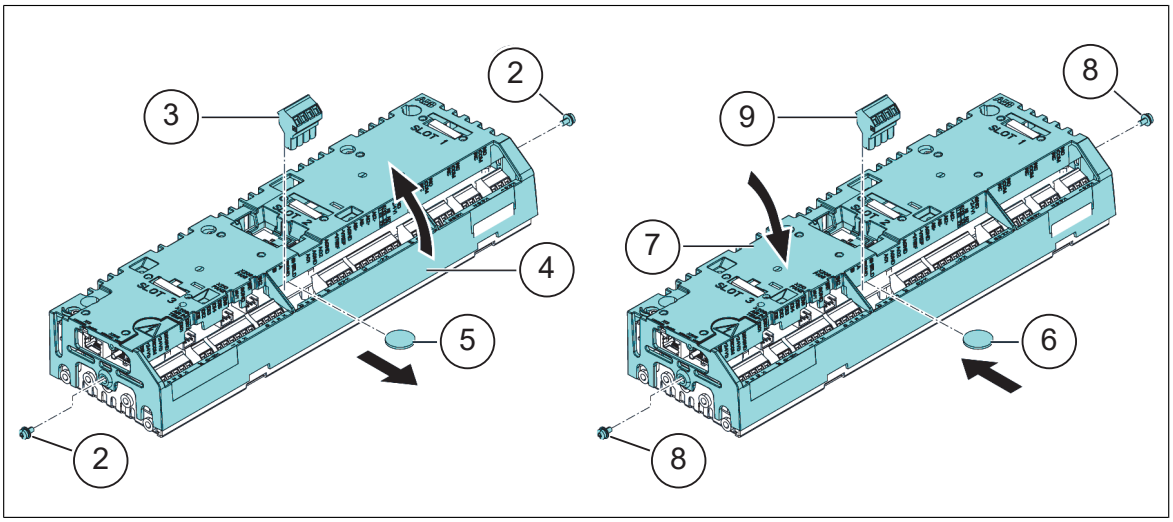

LEDs and other status indicators

This section instructs how to interpret the status indications of the ACS880-304…+A003 diode supply module.

The firmware manual delivered with the module contains information on warnings and faults that are reported by the application program and shown on the control panel on the cabinet door.

The ACS-AP-… control panel has a status LED. The control panel mounting platform or holder has two status LEDs. For their indications, see the following table.

Location	LED	Indication
Control panel	Continuous green	The unit is functioning normally.
	Flickering green	Data is transferred between the PC and the unit through the USB connection of the control panel.
	Blinking green	There is an active warning in the unit.
	Continuous red	There is an active fault in the unit.
	Blinking red	There is a fault that requires the stopping and restarting of the drive/converter/inverter.
	Blinking blue (ACS-AP-W only)	The Bluetooth interface is enabled, in discoverable mode, and ready for pairing.
	Flickering blue (ACS-AP-W only)	Data is being transferred through the Bluetooth interface of the control panel.
Control panel mounting platform or holder (with the control panel removed)	Red	There is an active fault in the unit.
	Green	Power supply for the control unit is OK.

9

Ordering information

Contents of this chapter

This chapter lists the types and ordering codes of the unit components.

You can find the kit-specific assembly drawings, step-by-step instructions and detailed kit information on the Internet. Go to https://sites-apps.abb.com/sites/lvacdrivesengineeringsupport/content. If necessary, contact your local ABB representative.

Note:

- This chapter only lists the installation accessories available from ABB. All other parts must be sourced from a third party (such as Rittal) by the system integrator. For a listing, refer to the kit-specific installation instructions available at https://sites-apps.abb.com/sites/lvacdrivesengineeringsupport/content. For access, contact your local ABB representative.
- Parts that are labeled suitable for generic enclosures are not designed for any specific enclosure system. These parts are intended as a basis for further engineering, and may require additional parts to be fully usable.

  Installation accessories designed for generic enclosures are in fact designed for an inside width of 50 mm less than the nominal width of the enclosure. For example, a mechanical kit intended for 800 mm wide generic enclosure is designed for an inside width of 750 mm, and will not fit a 800 mm wide Rittal VX25 enclosure.

Kit code key

The kit codes shown in this chapter break down as follows.

The format of the kit code is x-w-s-yyy(-VX), for example, L-6-8-401 where:

- x = cooling method
  - A = air-cooled (some of these kits are also used with liquid-cooled drives)
  - L = liquid-cooled
- w = cabinet width
  - 4 = 400 mm
  - 6 = 600 mm
  - 8 = 800 mm
- s = module frame size / sizes
  - 1 = R1i
  - 2 = R2i
  - 3 = R3i
  - 4 = R4i
  - 5 = R5i
  - 6 = R6i/D6D
  - 7 = R7i/D7D/D7T
  - 8 = R8i/D8D/D8T
  - X = any, or not defined.

- yyy = consecutive numbering
  - 001…099 = Kits related to cabinets, for example, adapter plates

    001…019 Common AC- and DC-related kits
    020…049 Cabinet mechanics kits
    050…059 Swing frame kits

  - 100…199 = Kits related to AC connection, for example, busbars

    100…129 Kits with connection to AC
    130…149 Kits with connection to module
    150…199 Other kits related to AC connection

  - 200…299 = Kits related to DC connection, for example, busbars

    200…229 Kits with connection to common DC
    230…249 Kits with connection to module
    250…299 Other kits related to DC connection

  - 300…399 = Kits related to module installation, for example, mechanical supports

    300…330 Module supporting kits, basic mechanical support
    350…379 Shroud kits

  - 400…499 = Other kits

    400…419 Fan kits
    420…439 Air guides
    440…459 Cooling circuit kits

- VX = Kit specifically designed for the Rittal VX25 enclosure system. Many kits without this designation are also used with the VX25 system.

Frame D6D and D7D

Diode supply modules

The diode supply module includes the following items:

Ordering code	Frame size	Contents
U_N = 400 V		• Diode supply module (1) • Direct-on-line cooling fan (+C188) in the module (2)
ACS880-304-0080A-3+A003+C188	D6D	
ACS880-304-0170A-3+A003+C188		
ACS880-304-0330A-3+A003+C188	D7D	
ACS880-304-0490A-3+A003+C188		
U_N = 500 V		

Ordering code	Frame size	Contents
ACS880-304-0080A-5+A003+C188	D6D	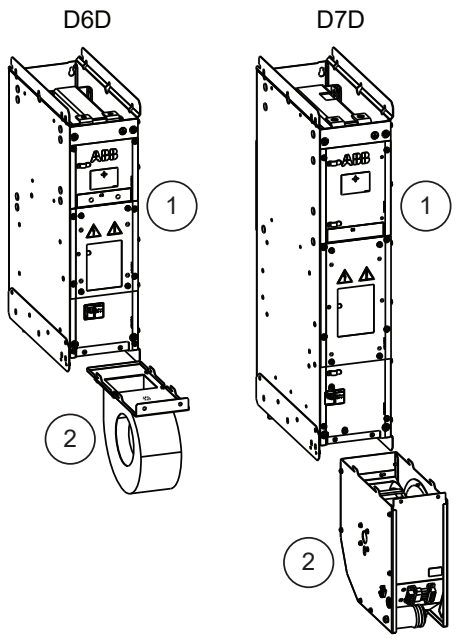
ACS880-304-0170A-5+A003+C188		
ACS880-304-0330A-5+A003+C188	D7D	
ACS880-304-0490A-5+A003+C188		

Note: The following components are always required to construct a working unit and must be ordered separately (amounts given here are for one diode supply module):

- Cabinet fan. For more information, see *Cooling fans (page 125)*
- ZCU kit. For the contents of the kit, see *ZCU kit (page 116)*
- 1 × plug connector for temperature protection circuit (10019273) [X1]
- 1 × module fan plug connector (64791478) [X7], see *Plug connectors (page 125)*
- Varistor board CVAR-01C (UL/CSA installations only). For more information, see *Varistor kit ACS880 for UL/CSA installations (page 121)*.

The other parts listed in this chapter for these frame sizes

- may be required by the application, or
- make the installation or use of the module easier.

Control panel

The control panel is not included with the module but must be ordered separately. One control panel is required for the commissioning of an ACS880 drive system, even if the Drive composer PC tool is used.

The control panel can be flush mounted on the cabinet door with the help of a door mounting kit. For more information on the control panel, see *ACX-AP-x assistant control panels user's manual* (3AUA0000085685 [English]).

Type	Description	Ordering code	Illustration
ACS-AP-W	Control panel with Bluetooth	3AXD50000025965	
DPMP-01	Door mounting kit (IP55)	3AUA0000108878	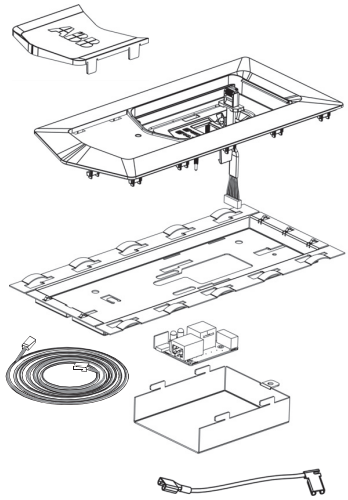

The door mounting kit contains:

- front cover
- flat cable (between DDPI-01 board and the panel)
- DDPI-01 board, cover and M4×8 combi screw for the cover
- EMC shield
- control panel mounting platform
- grounding wire
- Ethernet cable (3 m [9.8 ft]).
- *DPMP-01 mounting platform for ACS-AP control panel installation guide* (3AUA0000100140 [English]).

Control electronics

Cabling of the electronics outside the module must be done by the customer. The control electronics require a 24 V DC power supply which must be purchased and wired by the customer. The current consumption of the main components in the auxiliary circuit is shown in the technical data.

ZCU kit

Each diode supply unit requires a control unit.

Module type	Control unit	Qty	Ordering code	Illustration
All	ZCU kit	1	3AXD50000000933	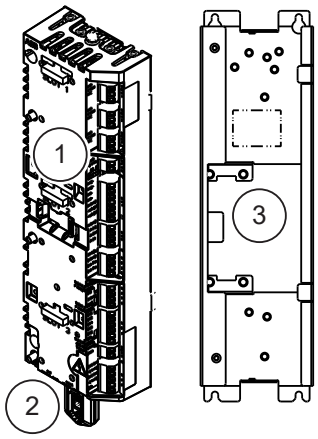

The ZCU kit contains:

- ZCU-14 control unit (1)
- ZMU-02 memory unit with ACS880 diode supply control program (2)
- support plate for ZCU-14 (3).

For more information, see the dimension drawings.

Note: Fiber optic communication between the supply unit and inverter unit requires an FDCO-01 DDCS communication module.

Mechanical installation accessories and tools

Module installation parts

Module installation parts include, for example, top and bottom supports and air baffles for the supply module.

Frame size	Enclosure	Qty	Ordering code	Kit code	Illustration
D6D, D7D	400 mm Rittal VX25	1	3AXD50000510832	A-4-67-301-VX	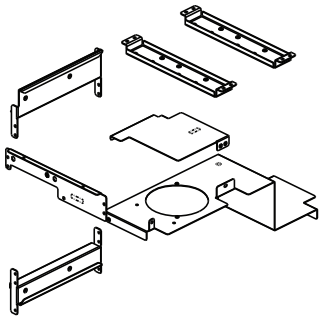 Instruction code: 3AXD50000520282

Main switch-disconnector and contactor mechanics kit

Mechanics kit is used for installing main switch-disconnector and contactor for the D7D module.

Frame size	Enclosure	Qty	Ordering code	Kit code	Illustration
D7D	400 mm Rittal VX25	1	3AXD50000520534	A-4-7-334-VX	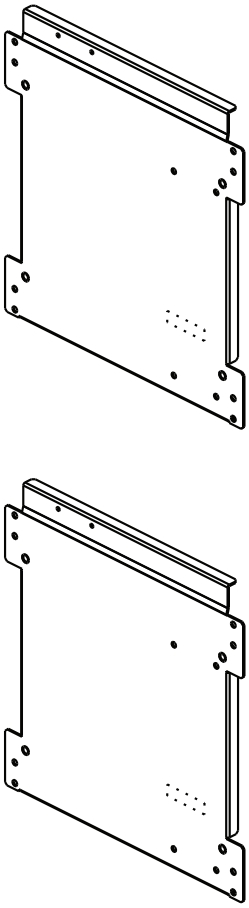 Instruction code: 3AXD50000520657

Shrouds

Shrouds are used for IP20 touch protection with the cabinet doors open.

Frame size	Enclosure	Qty	Ordering code	Kit code	Illustration
D6D	400 mm Rittal VX25	1	3AXD50000510856	A-4-6-352-VX	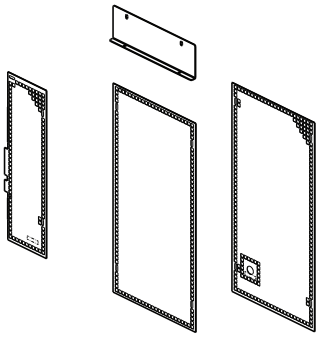 Instruction code: 3AXD50000516551
D7D	400 mm Rittal VX25	1	3AXD50000510863	A-4-7-351-VX	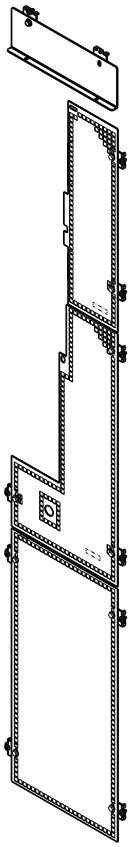 Instruction code: 3AXD50000521258

X6X/X7X lifting device

The lifting device is used for lifting the D6D and D7D modules. See *Replacing the D6D and D7D supply module (page 101)*. You can install the lifting device to the Rittal VX25 enclosure.

Frame size	Enclosure	Qty	Ordering code	Kit code	Illustration
D6D, D7D	400 mm Rittal VX25	1	3AXD50000439997	A-46-67-440-VX	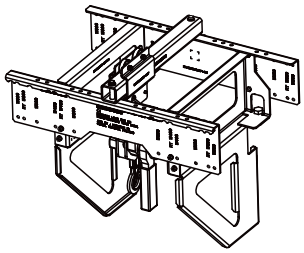 Instruction code: 3AXD50000439409

AC-side components

Main switch-disconnector kits

The main power line is equipped with a main switch-disconnector [Q1].

IEC				
Frame size	Main switch-disconnector		Qty	Ordering code
	Type	Data		
D6D	OS250D03	80 kA, 1000 V, 250 A	1	3AXD50000001308*
D7D	OS630D12	80 kA, 1000 V, 630 A	1	3AXD50000001309**

The main switch-disconnector kit contains:

- main switch disconnector unit
- shaft (6 × 210 mm)* or (12 × 535 mm)**
- handle OHB65J6* or OHB145J12** with on/off indication
- normally-open auxiliary contact OA1G10.

UL				
Frame size	Main switch-disconnector		Qty	Ordering code
	Type	Data		
D6D	OS400J03	80 kA, 1000 V, 400 A	1	3AXD50000002793*
D7D	OS600J12	80 kA, 1000 V, 600 A	1	3AXD50000002794**

The main switch-disconnector kit contains:

- main switch disconnector unit
- shaft (12 × 185 mm)* or (12 × 535 mm)**
- handle OHB95J12*or OHB145J12** with on/off indication
- normally-open auxiliary contact OA1G10.

For the dimension drawings, see section *Main switch-disconnectors (page 167)*.

AC fuses

The AC fuses protect the input cables, main contactor [Q2] and the DSU module against short circuits. For the dimension drawings, see section *AC fuses (page 176)*.

IEC				
Module type ACS880-304-…	**Fuse**		**Qty**	**Ordering code**
	Type	**Data**		
U_N = 400 V				
0080A-3+A003	Bussmann 170M3814D	160 A, 690 V, size 1	3	58927635
0170A-3+A003	Bussmann 170M3817D	315 A, 690 V, size 1	3	68316049
0330A-3+A003	Bussmann 170M6809D	550 A, 690 V, size 3	3	10029911
0490A-3+A003	Bussmann 170M6812D	800 A, 690 V, size 3	3	10003580
U_N = 500 V				
0080A-5+A003	Bussmann 170M3814D	160 A, 690 V, size 1	3	58927635
0170A-5+A003	Bussmann 170M3817D	315 A, 690 V, size 1	3	68316049
0330A-5+A003	Bussmann 170M6809D	550 A, 690 V, size 3	3	10029911
0490A-5+A003	Bussmann 170M6812D	800 A, 690 V, size 3	3	10003580

UL				
Module type ACS880-304-…	**Fuse**		**Qty**	**Ordering code**
	Type	**Data**		
U_N = 400 V				
0080A-3+A003	Bussmann DFJ-250	250 A, 600 V, CLASS J	3	3AUA0000073032
0170A-3+A003	Bussmann DFJ-250	250 A, 600 V, CLASS J	3	3AUA0000073032
0330A-3+A003	Bussmann DFJ-500	500 A, 600 V, CLASS J	3	3AUA0000073044
0490A-3+A003	Bussmann KTU-700	700 A, 600 V, CLASS L	3	68223156
U_N = 500 V				
0080A-5+A003	Bussmann DFJ-250	250 A, 600 V, CLASS J	3	3AUA0000073032
0170A-5+A003	Bussmann DFJ-250	250 A, 600 V, CLASS J	3	3AUA0000073032
0330A-5+A003	Bussmann DFJ-500	500 A, 600 V, CLASS J	3	3AUA0000073044
0490A-5+A003	Bussmann KTU-700	700 A, 600 V, CLASS L	3	68223156

Main contactors

The main power line is equipped with main contactors [Q2]. Contactors are used for the on-off control of the main AC input power. Contactors are suitable for both IEC and UL installations.

Module type ACS880-304-…	**Main contactor (IEC/UL)**		**Qty**	**Ordering code**
	Type	**Data**		
U_N = 400 V				
0080A-3+A003	AF146-30-22B-13	225 A(I_{Th}) 1000 V(U_E) 100…250 V AC	1	3AXD50000025712
0170A-3+A003	AF146-30-22B-13	225 A(I_{Th}) 1000 V(U_E) 100…250 V AC	1	3AXD50000025712
0330A-3+A003	AF460-30-22-70	700 A(I_{Th}) 1000 V(U_E) 100…250 V /50…60 Hz, 2	1	64430742
0490A-3+A003	AF460-30-22-70	700 A(I_{Th}) 1000 V(U_E) 100…250 V /50…60 Hz, 2	1	64430742

Module type ACS880-304-…	Main contactor (IEC/UL)		Qty	Ordering code
	Type	Data		
U_N = 500 V				
0080A-5+A003	AF146-30-22B-13	225 A(I_{Th}) 1000 V(U_E) 100…250 V AC	1	3AXD50000025712
0170A-5+A003	AF146-30-22B-13	225 A(I_{Th}) 1000 V(U_E) 100…250 V AC	1	3AXD50000025712
0330A-5+A003	AF460-30-22-70	700 A(I_{Th}) 1000 V(U_E) 100…250 V /50…60 Hz, 2	1	64430742
0490A-5+A003	AF460-30-22-70	700 A(I_{Th}) 1000 V(U_E) 100…250 V /50…60 Hz, 2	1	64430742

Definitions

I_{TH} Conventional free-air thermal current

U_E Rated operational voltage

The contactor package includes:

- contactor unit
- fixing screws
- 2 × normally-open + 2 × normally-closed auxiliary contacts.

For the dimension drawings, see section *Main contactors (page 172)*.

Varistor kit ACS880 for UL/CSA installations

The CVAR varistor board is used to protect the supply/rectifier module against excessive voltage peaks. The board shunts the current created by high voltage.

The CVAR board must be:

- installed into the cabinet,
- connected to the main circuit after the main contactor [Q2], and
- connected to the PE.

For the best results, use the shortest possible wiring when connecting the CVAR board. For the detailed connection, see the example circuit diagrams.

Module type	Type	Qty	Ordering code	Illustration
All	Varistor board kit	1	3AXD50000005122	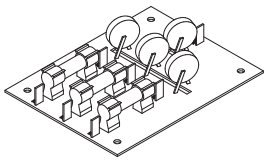

The varistor kit for ACS880 contains:

- CVAR varistor board with fastening items (stand-offs and fastening screws).

For the dimensions of the CVAR board, see the dimension drawings.

AC busbars

In D6D and D7D, AC busbars provide connection from the supply module input to the AC cabling.

Frame size	Enclosure	Qty	Ordering code	Kit code	Illustration
D6D, D7D	400 mm Rittal VX25	1	3AXD50000510849	A-4-67-101-VX	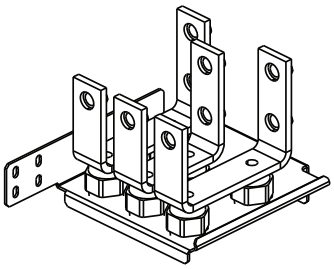 Instruction code: 3AXD50000520374

DC-side components

DC bus installation parts (for Rittal VX25 enclosures)

The brackets in this kit act as a mounting base for the busbar supports of the Rittal Flat-PLS DC bus and ensure its correct placement and alignment inside the cabinet line-up.

The designs shown in this manual for Rittal VX25 enclosures use the Rittal Flat-PLS busbar system. Make sure that the current in the drive system does not exceed the current-carrying capacity of the busbars.

Used with …	Qty	Ordering code	Kit code	Illustration
400/600/800 mm VX25 enclosure	1 kit per cubicle	3AXD50000333387	A-468-X-001-VX	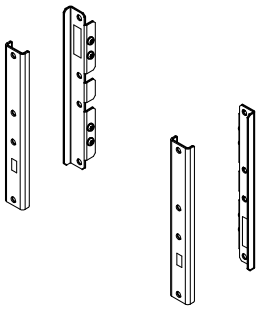 Instruction code: 3AXD50000333639

Ventilation kits

Air inlet kits 400 mm cabinet

Used with …	Qty	Ordering code	Kit code	Illustration
IP20	1	3AUA0000117002	A-4-X-021	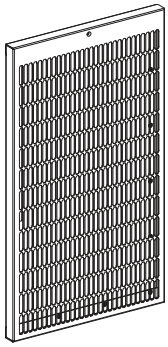 Instruction code: 3AUA0000116879
IP42	1	3AUA0000117007	A-4-X-024	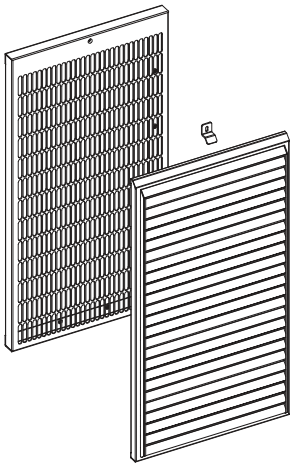 Instruction code: 3AUA0000116873
IP54	1	3AXD50000009184	A-4-X-027	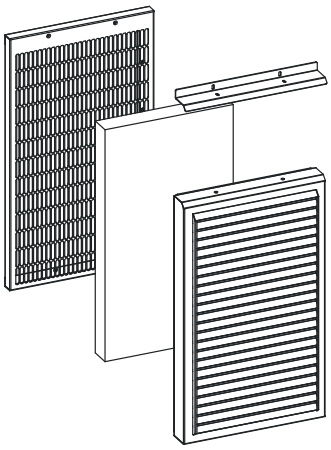 Instruction code: 3AXD50000009989

Air outlet kits 400 mm cabinet

Used with …	Qty	Ordering code	Kit code	Illustration
IP20 (IEC)	1	3AUA0000125203	A-4-X-042	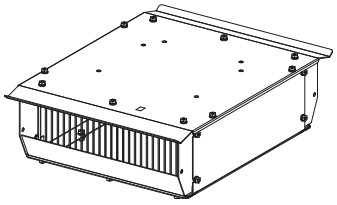 Instruction code: 3AXD50000001983
IP42 (IEC)	1	3AUA0000114968	A-4-X-040	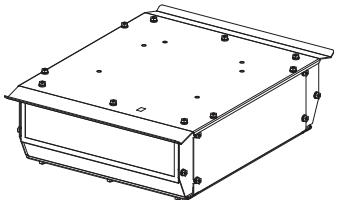 Instruction code: 3AUA0000115292
IP54 (IEC)	1	3AXD50000009187	A-4-X-064	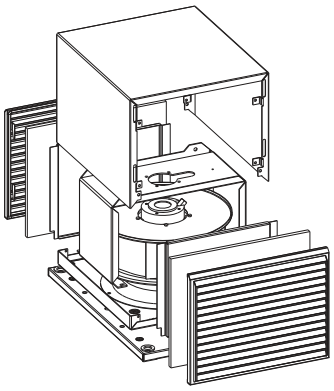 Instruction code: 3AXD50000010284 **Note:** Fan to be ordered separately
IP54 (UL)	1	3AXD50000010362	A-4-X-067	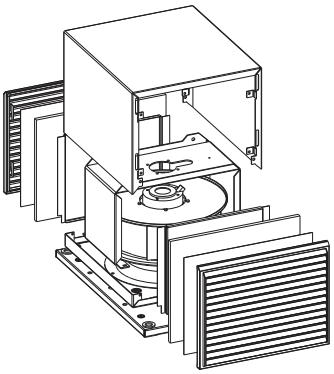 Instruction code: 3AXD50000010284 **Note:** Fan to be ordered separately

Cooling fans

The cabinet fan is needed for cooling of the cabinet components of the D6D and D7D modules. For the dimension drawings, see *D6D/D7D cabinet cooling fan (page 186)*.

IEC/UL				
Enclosure / Degree of protection	**Component**		**Qty**	**Ordering code**
	Name	**Data**		
400 mm / IP20, IP42	Fan	W2E 143-AA09-01 220 V, 50/60 Hz, 20/24 W, 0.1 A	1	10005019

Miscellaneous

Plug connectors

The table lists plug connectors that are not included in the module kit but you must order them separately.

Connector	Data	Qty	Ordering code
X1	Plug connector for temperature protection circuit MSTB 2.5/2-ST-5.08, 2.5 mm^2, 250 V,12 A, 2 poles	1 per module	10019273
X7	Module fan plug connector, STV S 4 SB, female connector, 500 V, 25 A, 4 poles (Weidmüller)	1 per fan	64791478

Frame D8D

Diode supply modules

Ordering code	Frame size	Contents
U_N = 400 V		• Diode supply module (1) • Direct-on-line cooling fan (+C188) in the module (2) 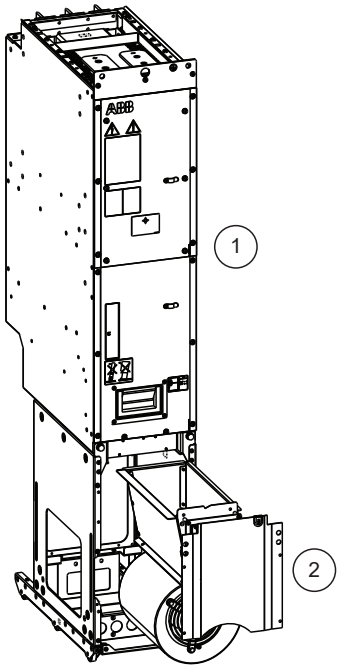
ACS880-304-0650A-3+A003+C188	D8D	
ACS880-304-0980A-3+A003+C188	D8D	
U_N = 500 V		
ACS880-304-0650A-5+A003+C188	D8D	
ACS880-304-0980A-5+A003+C188	D8D	

Ordering code format	Option codes
[Module type] + code [+code] … For example, **ACS880-304-0980A-3+A003+C188**	**+C129**: cULus listed **+C134**: CSA certified **Note:** Options +C129 and +C134 must be selected at the same time.

Note: The following components are always required to construct a working unit and must be ordered separately (amounts given here are for one diode supply module):

- Quick connector. See *Quick connector (page 133)*
- DC connection flanges. See *DC connection flanges (page 135)*
- ZCU kit. For the contents of the kit, see *ZCU kit (page 116)*
- 1 × plug connector for temperature protection circuit (10019273) [X1]
- 1 × module fan plug connector (10035031) [X7], see *Plug connectors (page 137)*
- Varistor board CVAR-01C (UL/CSA installations only). For more information, see *Varistor kit ACS880 for UL/CSA installations (page 121)*.

The other parts listed in this chapter for these frame sizes

- may be required by the application, or
- make the installation or use of the module easier.

Control panel

The control panel is not included with the module but must be ordered separately. One control panel is required for the commissioning of an ACS880 drive system, even if the Drive composer PC tool is used.

The control panel can be flush mounted on the cabinet door with the help of a door mounting kit. For more information on the control panel, see *ACX-AP-x assistant control panels user's manual* (3AUA0000085685 [English]).

Type	Description	Ordering code	Illustration
ACS-AP-W	Control panel with Bluetooth	3AXD50000025965	
DPMP-01	Door mounting kit (IP55)	3AUA0000108878	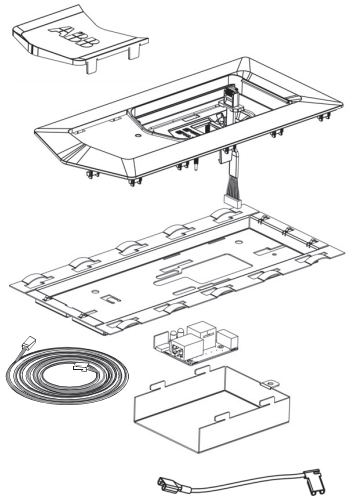

The door mounting kit contains:

- front cover
- flat cable (between DDPI-01 board and the panel)
- DDPI-01 board, cover and M4×8 combi screw for the cover
- EMC shield
- control panel mounting platform
- grounding wire
- Ethernet cable (3 m [9.8 ft]).
- *DPMP-01 mounting platform for ACS-AP control panel installation guide* (3AUA0000100140 [English]).

Control electronics

Cabling of the electronics outside the module must be done by the customer. The control electronics require a 24 V DC power supply which must be purchased and wired by the customer. The current consumption of the main components in the auxiliary circuit is shown in the technical data.

ZCU kit

Each diode supply unit requires a control unit.

Module type	Control unit	Qty	Ordering code	Illustration
All	ZCU kit	1	3AXD50000000933	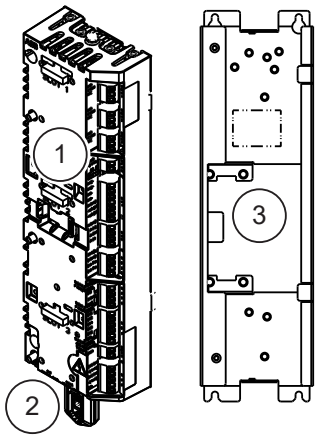

The ZCU kit contains:

- ZCU-14 control unit (1)
- ZMU-02 memory unit with ACS880 diode supply control program (2)
- support plate for ZCU-14 (3).

For more information, see the dimension drawings.

Note: Fiber optic communication between the supply unit and inverter unit requires an FDCO-01 DDCS communication module.

Mechanical installation accessories and tools

Module installation parts

Module installation parts include, for example, top and bottom supports for the supply module.

Frame size	Enclosure	Qty	Ordering code	Kit code	Illustration
D8D	400 mm Rittal VX25	1	3AXD50000371877	A-4-8-303-VX	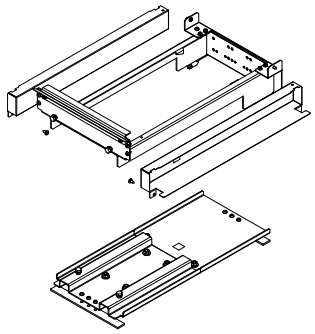 Instruction code: 3AXD50000372799

Shrouds

Shrouds are used for IP20 touch protection with the cabinet doors open.

Frame size	Enclosure	Qty	Ordering code	Kit code	Illustration
D8D	400 mm Rittal VX25	1	3AXD50000337484	A-4-8-353-VX	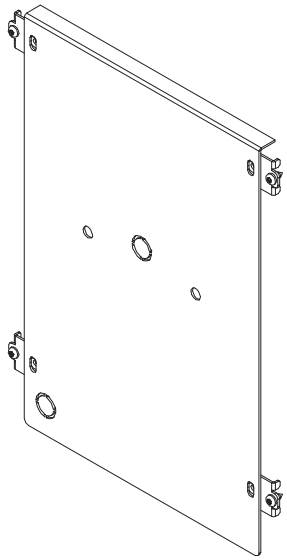 Instruction code: 3AXD50000335169

Ramp

The ramp can be used when installing or removing the D8D module in the Rittal VX25 enclosure.

Do not use the ramp with plinth heights over 100 mm (3.93 in). The ramp is designed for a plinth height of 100 mm (the standard plinth height of Rittal VX25 enclosures).

Used with …	Qty	Ordering code	Kit code	Illustration
All VX25 enclosures	1	3AXD50000438037	A-468-8-304-VX	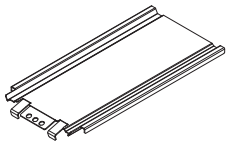

AC-side components

Bracket for Flat-PLS busbar holder (common AC)

When using the Rittal Flat-PLS system, this kit is used for correct positioning of the common AC bus in the Rittal VX25 enclosure.

The designs presented in this manual for Rittal VX25 enclosures use the Rittal Flat-PLS busbar system. Make sure that the current in the drive system does not exceed the current-carrying capacity of the busbars.

Frame size	Enclosure	Qty	Ordering code	Kit code	Illustration
All	400 mm Rittal VX25	1	3AXD50000360772	A-468-X-011-VX	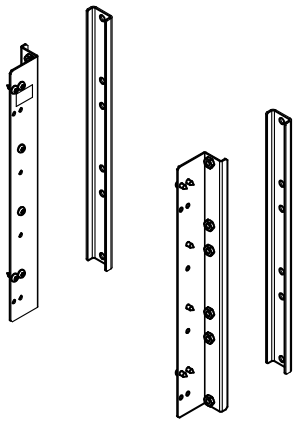 Instruction code: 3AXD50000372782

Main switch-disconnector kits

The main power line is equipped with a main switch-disconnector [Q1].

IEC				
Module type ACS880-304…	Main switch-disconnector		Qty	Ordering code
	Type	Data		
U_N = 400 V				
0650A-3+A003	OT1000E03	50 kA, 690 V, 1000 A	1	3AXD50000000894
0980A-3+A003	OT1250E03	50 kA, 690 V, 1250 A	1	3AXD50000000895

IEC				
Module type ACS880-304…	Main switch-disconnector		Qty	Ordering code
	Type	Data		
U_N = 500 V				
0650A-5+A003	OT1000E03	50 kA, 690 V, 1000 A	1	3AXD50000000894
0980A-5+A003	OT1250E03	50 kA, 690 V, 1250 A	1	3AXD50000000895

UL				
Frame size	Main switch-disconnector		Qty	Ordering code
	Type	Data		
D8D	OT1200U03	50 kA, 1000 V, 1200 A	1	3AXD50000002795

The main switch-disconnector kit contains:

- main switch disconnector unit
- shaft (12 × 280 mm)**
- handle OHB274J12 with on/off indication
- normally-open auxiliary contact OA1G10.

For the dimension drawings, see section *Main switch-disconnectors (page 167)*.

AC fuses

The AC fuses protect the input cables, main contactor [Q2] and the DSU module against short circuits. For the dimension drawings, see section *AC fuses (page 176)*.

IEC/UL				
Module type ACS880-304-…	Fuse		Qty	Ordering code
	Type	Data		
U_N = 400 V				
0650A-3+A003	Bussmann 170M6415	1100 A, 690 V, size 3	3	68731658
0980A-3+A003	Bussmann 170M6419	1600 A, 690 V, size 3*	3	68393108
U_N = 500 V				
0650A-5+A003	Bussmann 170M6415	1100 A, 690 V, size 3	3	68731658
0980A-5+A003	Bussmann 170M6419	1600 A, 690 V, size 3*	3	68393108

Main contactors

The main power line is equipped with main contactors [Q2]. Contactors are used for the on-off control of the main AC input power. Contactors are suitable for both IEC and UL installations.

Module type ACS880-304-…	Main contactor (IEC/UL)		Qty	Ordering code
	Type	Data		
U_N = 400 V				
0650A-3+A003	AF750-30-22-70	1050 A(I_{Th}) 1000 V(U_E) 100…250 V /50…60 Hz	1	64399772
0980A-3+A003	AF1250-30-22-70	1250 A(I_{Th}) 1000 V(U_E) 100…250 V /50…60 Hz	1	68687284

Module type ACS880-304-…	Main contactor (IEC/UL)		Qty	Ordering code
	Type	Data		
U_N = 500 V				
0650A-5+A003	AF750-30-22-70	1050 A(I_{Th}) 1000 V(U_E) 100…250 V /50…60 Hz	1	64399772
0980A-5+A003	AF1250-30-22-70	1250 A(I_{Th}) 1000 V(U_E) 100…250 V/50…60 Hz	1	68687284

Definitions

I_{TH} Conventional free-air thermal current

U_E Rated operational voltage

The contactor package includes:

- contactor unit
- fixing screws
- 2 × normally-open + 2 × normally-closed auxiliary contacts.

For the dimension drawings, see section *Main contactors (page 172)*.

Varistor kit ACS880 for UL/CSA installations

The CVAR varistor board is used to protect the supply/rectifier module against excessive voltage peaks. The board shunts the current created by high voltage.

The CVAR board must be:

- installed into the cabinet,
- connected to the main circuit after the main contactor [Q2], and
- connected to the PE.

For the best results, use the shortest possible wiring when connecting the CVAR board. For the detailed connection, see the example circuit diagrams.

Module type	Type	Qty	Ordering code	Illustration
All	Varistor board kit	1	3AXD50000005122	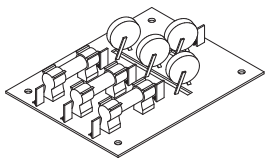

The varistor kit for ACS880 contains:

- CVAR varistor board with fastening items (stand-offs and fastening screws).

For the dimensions of the CVAR board, see the dimension drawings.

AC busbars

In D8D, AC busbars provide connection from the module input to the common AC Flat-PLS.

Frame size	Enclosure	Qty	Ordering code	Kit code	Illustration
D8D	400 mm Rittal VX25	1	3AXD50000371853	A-4-8-102-VX	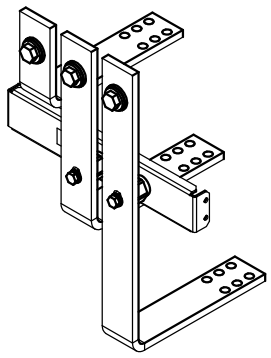 Instruction code: 3AXD50000417247

D8D AC busbars to quick connector

The AC busbars to quick connector kit includes busbars for connecting the quick connector to the common AC Flat-PLS.

Frame size	Enclosure	Qty	Ordering code	Kit code	Illustration
D8D	400 mm Rittal VX25	1	3AXD50000371860	A-4-8-180-VX	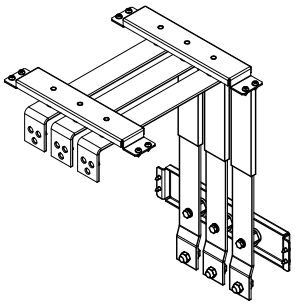 Instruction code: 3AXD50000379736

Quick connector

The power input is connected to the module through a quick connector.

Used with	Qty	Ordering code	Kit code	Illustration
All enclosure types	1 per module	3AUA0000119227	A-468-8-100	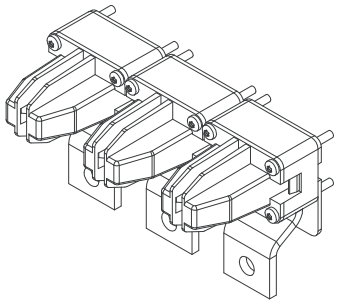 Instruction code: 3AUA0000118667

DC-side components

DC bus installation parts (for Rittal VX25 enclosures)

The brackets in this kit act as a mounting base for the busbar supports of the Rittal Flat-PLS DC bus and ensure its correct placement and alignment inside the cabinet line-up.

The designs shown in this manual for Rittal VX25 enclosures use the Rittal Flat-PLS busbar system. Make sure that the current in the drive system does not exceed the current-carrying capacity of the busbars.

Used with …	Qty	Ordering code	Kit code	Illustration
400/600/800 mm VX25 enclosure	1 kit per cubicle	3AXD50000333387	A-468-X-001-VX	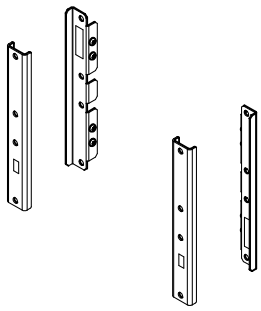 Instruction code: 3AXD50000333639

DC busbars

DC busbars provide connection from the module DC output to the common DC bus.

Frame size	Enclosure	Qty	Ordering code	Kit code	Illustration
D8D	400 mm Rittal VX25	1	3AXD50000371884	A-4-8-201-VX	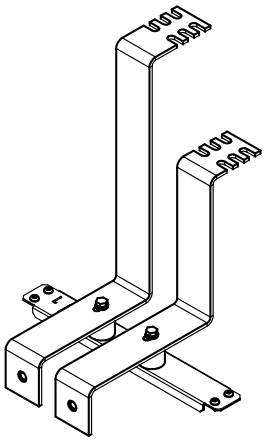 Instruction code: 3AXD50000373871

DC connection flanges

Each diode supply module requires DC connection flanges.

Frame size	Enclosure	Qty	Ordering code	Kit code	Illustration
D8D	400 mm Rittal VX25	1	3AXD50000002639	A-468-8-230	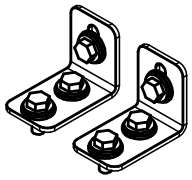 Instruction code: 3AXD50000002638

Ventilation kits

Air inlet kits 400 mm cabinet

Used with …	Qty	Ordering code	Kit code	Illustration
IP20	1	3AUA0000117002	A-4-X-021	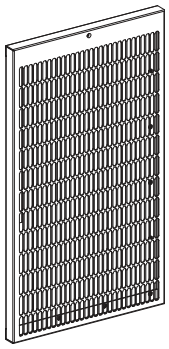 Instruction code: 3AUA0000116879
IP42	1	3AUA0000117007	A-4-X-024	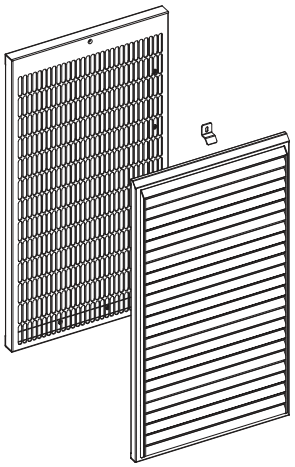 Instruction code: 3AUA0000116873

Used with …	Qty	Ordering code	Kit code	Illustration
IP54	1	3AXD50000009184	A-4-X-027	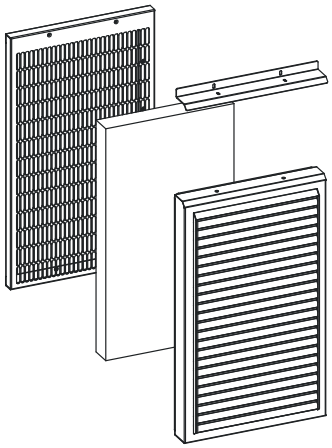 Instruction code: 3AXD50000009989

Air outlet kits 400 mm cabinet

Used with …	Qty	Ordering code	Kit code	Illustration
IP20 (IEC)	1	3AUA0000125203	A-4-X-042	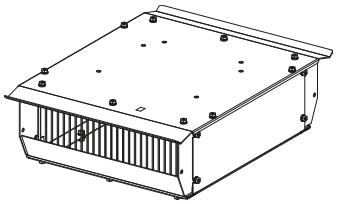 Instruction code: 3AXD50000001983
IP42 (IEC)	1	3AUA0000114968	A-4-X-040	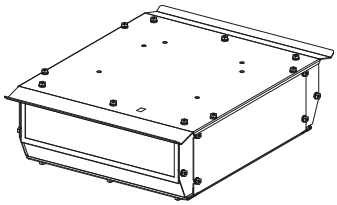 Instruction code: 3AUA0000115292
IP54 (IEC)	1	3AXD50000009187	A-4-X-064	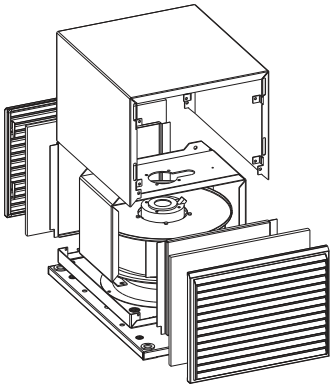 Instruction code: 3AXD50000010284 **Note:** Fan to be ordered separately

Used with …	Qty	Ordering code	Kit code	Illustration
IP54 (UL)	1	3AXD50000010362	A-4-X-067	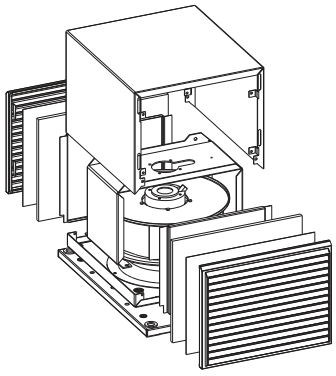 Instruction code: 3AXD50000010284 **Note:** Fan to be ordered separately

Miscellaneous

Plug connectors

The table lists plug connectors that are not included in the module kit but you must order them separately.

Connector	Data	Qty	Ordering code
X1	Plug connector for temperature protection circuit MSTB 2.5/2-ST-5.08, 2.5 mm^2, 250 V,12 A, 2 poles	1 per module	10019273
X7	Module fan plug connector, female connector, 16 A, 5 mm, 8 poles, 231-108/037-000/034-00 WAGO	1 per fan	10035031

10

Technical data

Contents of this chapter

This chapter contains the technical data for ACS880-304…+A003 diode supply modules.

Ratings

Module type ACS880-304-…	Frame size	No-overload use					Light-overload use		Heavy-duty use	
		I_N		I_{max}	P_N	S_N	I_{Ld}	P_{Ld}	I_{Hd}	P_{Hd}
		A (DC)	A (AC)	A (DC)	kW	kVA	A (DC)	kW (DC)	A (DC)	kW (DC)
U_N = 400 V										
0080A-3+A003	D6D	98	80	137	53	55	94	51	78	42
0170A-3+A003	D6D	212	173	297	114	120	203	110	170	92
0330A-3+A003	D7D	400	327	561	216	227	384	208	320	173
0490A-3+A003	D7D	600	490	840	324	339	576	311	480	259
0650A-3+A003	D8D	800	653	1120	432	452	768	415	640	345
0980A-3+A003	D8D	1200	980	1680	648	679	1152	622	960	519
U_N = 500 V										
0080A-5+A003	D6D	98	80	137	66	69	94	63	78	53
0170A-5+A003	D6D	212	173	297	143	150	203	137	170	144
0330A-5+A003	D7D	400	327	561	270	283	384	260	320	216
0490A-5+A003	D7D	600	490	840	405	424	576	389	480	324
0650A-5+A003	D8D	800	653	1120	540	566	768	518	640	432
0980A-5+A003	D8D	1200	980	1680	810	849	1152	778	960	648

Definitions

Nominal ratings

I_N	continuous rms input (AC) or output (DC) current. No overload capability at 40°C (104 F).
I_{max}	maximum output current. Available for 10 s at start, otherwise as long as allowed by module temperature.
P_N	nominal output power
S_N	nominal apparent power

Light-overload use (10% overload capability) ratings

I_{Ld}	continuous rms current. 10% overload is allowed for one minute every 5 minutes.
P_{Ld}	output power in light-overload use

Heavy-duty use (40% overload capability) ratings

I_{Hd}	continuous rms current. 40% overload is allowed for one minute every 5 minutes.
P_{Hd}	output power in heavy-duty use

Derating

Surrounding air temperature derating

In the temperature range +40…50 °C (+104…122 °F), the rated output current is derated by 1 percentage point for every added 1 °C (1.8 °F). The output current can be calculated by multiplying the current given in the rating table by the derating factor *(k)*:

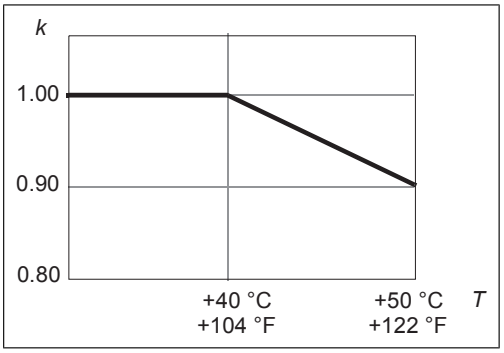

Altitude derating

At altitudes 1000 … 2000 m (3281 … 6562 ft) above sea level, the output current derating is 1 percentage point for every added 100 m (328 ft). For example, the derating factor for 1500 m (4921 ft) is 0.95. For altitudes above 2000 m (6562 ft), contact ABB.

If surrounding air temperature is below +40 °C (+104 °F), the derating can be reduced by 1.5 percentage points for every 1 °C (1.8 °F) reduction in temperature. A few altitude derating curves are shown below.

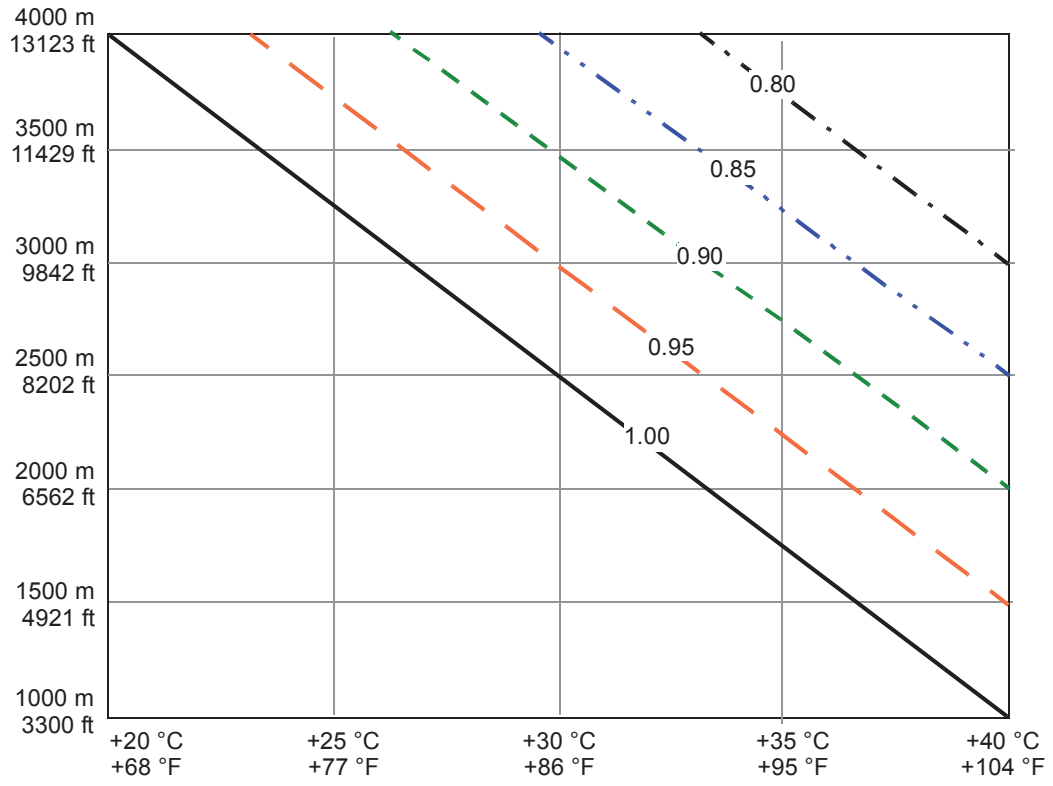

———	Derating factor 1.00
— — —	Derating factor 0.95
- - - -	Derating factor 0.90
—·—·—	Derating factor 0.85
— · — · —	Derating factor 0.80

For a more accurate derating, use the DriveSize PC tool.

Fuses

AC fuses

IEC

Module type ACS880-304…	Rating	Type	Example	Loss at I_N	Qty	I^2t clearing at 690 V
				W		A^2s
U_N = 400 V						
0080A-3+A003	160 A, 690 V, size 1	DIN 43620	Bussmann 170M3814D	2.4	3	8250
0170A-3+A003	315 A, 690 V, size 1	DIN 43620	Bussmann 170M3817D	5	3	52000
0330A-3+A003	550 A, 690 V, size 3	DIN 43620	Bussmann 170M6809D	13.2	3	140000
0490A-3+A003	800 A, 690 V, size 3	DIN 43620	Bussmann 170M6812D	14.4	3	490000
U_N = 500 V						
0080A-5+A003	160 A, 690 V, size 1	DIN 43620	Bussmann 170M3814D	2.4	3	8250
0170A-5+A003	315 A, 690 V, size 1	DIN 43620	Bussmann 170M3817D	5	3	52000
0330A-5+A003	550 A, 690 V, size 3	DIN 43620	Bussmann 170M6809D	13.2	3	140000

Module type ACS880-304…	Rating	Type	Example	Loss at I_N	Qty	I^2t clearing at 690 V
				W		A^2s
0490A-5+A003	800 A, 690 V, size 3	DIN 43620	Bussmann 170M6812D	14.4	3	490000

IEC/UL

Module type ACS880-304…	Rating	Type	Example	Loss at I_N	Qty	I^2t clearing at 690 V
				W		A^2s
U_N = 400 V						
0650A-3+A003	1100 A, 690 V, size 3	Flush end contact	Bussmann 170M6415	39	3	1300000 (at 660 V)
0980A-3+A003	1600 A, 690 V, size 3	Flush end contact	Bussmann 170M6419	53	3	3900000 (at 660 V)
U_N = 500 V						
0650A-5+A003	1100 A, 690 V, size 3	Flush end contact	Bussmann 170M6415	39	3	1300000 (at 660 V)
0980A-5+A003	1600 A, 690 V, size 3	Flush end contact	Bussmann 170M6419	53	3	3900000 (at 660 V)

UL

Module type ACS880-304…	Rating	Type	Example	Loss at I_N	Qty	I^2t clearing at 690 V
				W		A^2s
U_N = 400 V						
0080A-3+A003	250 A, 600 V	High speed fuse, CLASS J	Bussmann DFJ-250	Contact ABB	3	Contact ABB
0170A-3+A003	250 A, 600 V	High speed fuse, CLASS J	Bussmann DFJ-250	Contact ABB	3	Contact ABB
0330A-3+A003	500 A, 600 V	High speed fuse, CLASS J	Bussmann DFJ-500	Contact ABB	3	Contact ABB
0490A-3+A003	700 A, 600 V	High speed fuse, CLASS L	Bussmann KTU-700	Contact ABB	3	Contact ABB
U_N = 500 V						
0080A-5+A003	250 A, 600 V	High speed fuse, CLASS J	Bussmann DFJ-250	Contact ABB	3	Contact ABB
0170A-5+A003	250 A, 600 V	High speed fuse, CLASS J	Bussmann DFJ-250	Contact ABB	3	Contact ABB
0330A-5+A003	500 A, 600 V	High speed fuse, CLASS J	Bussmann DFJ-500	Contact ABB	3	Contact ABB
0490A-5+A003	700 A, 600 V	High speed fuse, CLASS L	Bussmann KTU-700	Contact ABB	3	Contact ABB

Definitions

Loss at I_N Heat loss of the example Bussmann fuses at DSU nominal current

Note: The recommended fuses are for branch circuit protection per NEC as required for the UL approval.

Forced cooling is required for the AC fuses of the diode supply modules to keep the fuse temperature under 100 °C (212 °F). Monitoring of cooling fan status or fuse temperature is also recommended. The heat loss of each fuse at the nominal load current is given in the table above.

The suitable fan for a unit with the D8D module depends on the cabinet design. It is recommended to install the fan in such a way that it directly cools the fuses.

Internal DC fuses

Supply module frame size and options	Supply module DC fuses					
	I_N A	I^2t A^2s	U_N V	Manufacturer	Type	Qty
D6D	350	68500 [1]	690	Bussmann	170M3418	2
D7D	700	755000	1000	Bussmann	170M4908	2
D8D (IEC)	900	1750000 [2]	1100	Bussmann	170M5499	4
D8D +C129+C134 (UL/CSA)	1800	7600000	1250	Bussmann	170M6783	2

[1] Clearing value at 660 V
[2] Clearing value at 1000 V

Fuses on CVAR board

The fuse type is Mersen/Ferraz Shawmut A070GRB10T13/G330010 (10 A, 700 V AC).

Note: The CVAR board is used in UL/CSA installations.

Dimensions and weights

Module type ACS880-304-…	Height		Width		Depth		Weight	
	mm	in	mm	in	mm	in	kg	lb
U_N = 400 V								
0080A-3+A003	815	32.10	170	6.69	407	16.02	37	82
0170A-3+A003	815	32.10	170	6.69	407	16.02	37	82
0330A-3+A003	1054	41.50	170	6.69	417	16.42	73	161
0490A-3+A003	1054	41.50	170	6.69	417	16.42	73	161
0650A-3+A003	1397	55.00	240	9.45	581	22.87	173	381
0980A-3+A003	1397	55.00	240	9.45	581	22.87	173	381
U_N = 500 V								
0080A-5+A003	815	32.10	170	6.69	407	16.02	37	82
0170A-5+A003	815	32.10	170	6.69	407	16.02	37	82
0330A-5+A003	1054	41.50	170	6.69	417	16.42	73	161
0490A-5+A003	1054	41.50	170	6.69	417	16.42	73	161
0650A-5+A003	1397	55.00	240	9.45	581	22.87	173	381
0980A-5+A003	1397	55.00	240	9.45	581	22.87	173	381

Free space requirements

The following table lists the free space requirements for the module inside the cabinet. For the free space requirements of the cabinet, see *Drive modules cabinet design and construction instructions* (3AUA0000107668 [English]).

Module type ACS880-304-…	Above		Front		Left		Right	
	mm	in	mm	in	mm	in	mm	in
U_N = 400 V								
0080A-3+A003	200	7.87	10	0.39	50	1.97	10	0.39
0170A-3+A003	200	7.87	10	0.39	50	1.97	10	0.39
0330A-3+A003	200	7.87	10	0.39	10	0.39	50	1.97
0490A-3+A003	200	7.87	10	0.39	10	0.39	50	1.97
0650A-3+A003	200	7.87	10	0.39	10	0.39	10	0.39
0980A-3+A003	200	7.87	10	0.39	10	0.39	10	0.39
U_N = 500 V								
0080A-5+A003	200	7.87	10	0.39	50	1.97	10	0.39
0170A-5+A003	200	7.87	10	0.39	50	1.97	10	0.39
0330A-5+A003	200	7.87	10	0.39	10	0.39	50	1.97
0490A-5+A003	200	7.87	10	0.39	10	0.39	50	1.97
0650A-5+A003	200	7.87	10	0.39	10	0.39	10	0.39
0980A-5+A003	200	7.87	10	0.39	10	0.39	10	0.39

Definitions

Above	Free space to enable cooling air flow
Front	Free space for cabling
Left	For D6D: Free space to enable cooling air flow in front of the fan intake (measured from the fan intake). For D7D: Free space for smooth installation.
Right	For D7D: Free space to enable cooling air flow in front of the fan intake (measured from the fan intake). For D6D: Free space for smooth installation.

Allowable mounting orientations

The modules must be mounted upright unless other orientations are expressly allowed below.

D6D modules: Installation on left-hand side (viewed from the front) allowed.

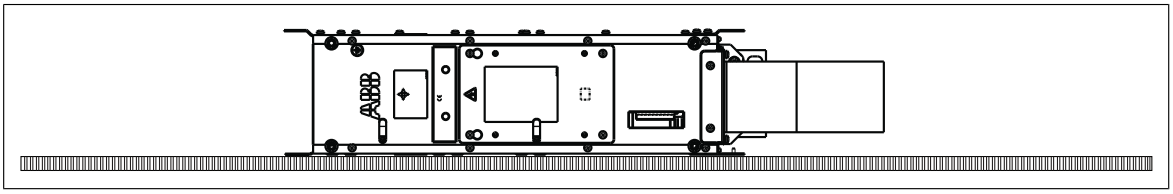

D7D modules: Installation on left-hand side (viewed from the front) allowed.

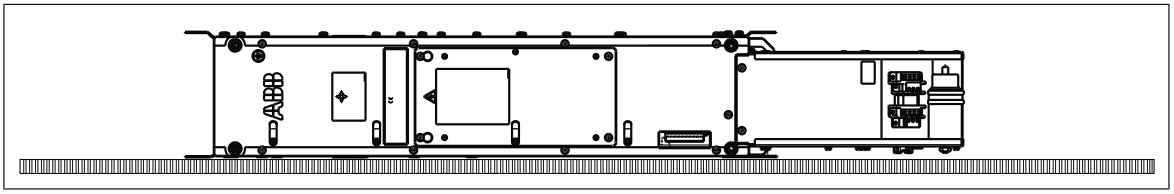

D8D modules: Installation on left-hand side (viewed from the front) allowed.

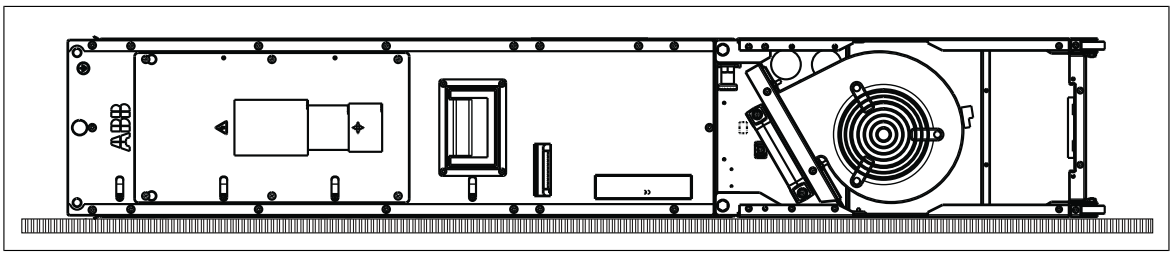

Losses, cooling data and noise

Module type ACS880-304-…	P_{loss}	Air flow		Noise	L/phase
	kW	m³/h	ft³/min	dB	µH
U_N = 400 V					
0080A-3+A003	0.8	370	218	62	290
0170A-3+A003	1.3	370	218	62	133
0330A-3+A003	2.0	720	424	62	70
0490A-3+A003	3.0	720	424	62	47
0650A-3+A003	4.5	900	530	65	35
0980A-3+A003	6.0	900	530	65	23
U_N = 500 V					
0080A-5+A003	0.8	370	218	62	290
0170A-5+A003	1.3	370	218	62	133
0330A-5+A003	2.0	720	424	62	70
0490A-5+A003	3.0	720	424	62	47
0650A-5+A003	4.5	900	530	65	35
0980A-5+A003	6.0	900	530	65	23

Definitions

P_{loss} Heat dissipation. Total losses of the DSU unit at nominal power.
The loss values are preliminary estimates. For more detailed information, contact ABB.

Noise Noise with direct-on-line fans running at nominal speed

L Inductance per phase (choke)

Auxiliary current consumption

Device	U_N	f	I_{max}	I_N	I_{start}
	V	Hz	A	A	A
Control unit ZCU-14 with options	24 V DC ±10%	-	2.05	-	-
D6D module fan (DOL +C188) G2E140-PE77-XX	230 V AC	50 / 60	-	0.46 (50 Hz) / 0.62 (60 Hz)	0.92 (50 Hz) / 1.24 (60 Hz)
D7D module fan (DOL +C188) R2E225-RA92-17	230 V AC	50 / 60	-	0.68 (50 Hz) / 0.92 (60 Hz)	1.36 (50 Hz) / 1.84 (60 Hz)
D8D module fan (DOL +C188) D3G146-AH50-16	230 V AC	50 / 60	-	1.20 (50 Hz) / 1.62 (60 Hz)	2.40 (50 Hz) / 3.42 (60 Hz)
D6D/D7D cabinet fan W2E143-AA09-01	230 V AC	50 / 60	-	0.10 (50 Hz) / 0.14 (60 Hz)	0.20 (50 Hz) / 0.27 (60 Hz)

Definitions

I_N Nominal current consumption

I_{max} Maximum current consumption

I_{start} Starting current consumption

Tightening torques

Unless a tightening torque is specified in the text, the following torques can be used.

Electrical connections

Size	Torque	Note
M3	0.5 N·m (4.4 lbf·in)	Strength class 4.6...8.8
M4	1 N·m (9 lbf·in)	Strength class 4.6...8.8
M5	4 N·m (35 lbf·in)	Strength class 8.8
M6	9 N·m (6.6 lbf·ft)	Strength class 8.8
M8	22 N·m (16 lbf·ft)	Strength class 8.8
M10	42 N·m (31 lbf·ft)	Strength class 8.8
M12	70 N·m (52 lbf·ft)	Strength class 8.8
M16	120 N·m (90 lbf·ft)	Strength class 8.8

Mechanical connections

Size	Max. torque	Note
M5	6 N·m (53 lbf·in)	Strength class 8.8
M6	10 N·m (7.4 lbf·ft)	Strength class 8.8
M8	24 N·m (17.7 lbf·ft)	Strength class 8.8

Insulation supports

Size	Max. torque	Note
M6	5 N·m (44 lbf·in)	Strength class 8.8

Size	Max. torque	Note
M8	9 N·m (6.6 lbf·ft)	Strength class 8.8
M10	18 N·m (13.3 lbf·ft)	Strength class 8.8
M12	31 N·m (23 lbf·ft)	Strength class 8.8

Cable lugs

Size	Max. torque	Note
M8	15 N·m (11 lbf·ft)	Strength class 8.8
M10	32 N·m (23.5 lbf·ft)	Strength class 8.8
M12	50 N·m (37 lbf·ft)	Strength class 8.8

Typical power cable sizes

The tables below give current carrying capacity (I_{Lmax}) for aluminum and copper PVC/XLPE insulated cables. A correction factor K = 0.70 is used. Time const is the temperature time constant of the cable.

The cable sizing is based on max. 9 cables laid on the cable trays side by side, three ladder type trays one on top of the other, ambient temperature 30 °C (EN 60204-1 and IEC 60364-5-52).

Aluminum cable		**PVC insulation** **Conductor temperature 70 °C**		**XLPE insulation** **Conductor temperature 90 °C**	
Size	**⌀ [mm]**	**I_{Lmax} [A]**	**Time const. [s]**	**I_{Lmax} [A]**	**Time const. [s]**
3 × 35 + 10 Cu	26	67	736	84	669
3 × 50 + 15 Cu	29	82	959	102	874
3 × 70 + 21 Cu	32	105	1182	131	1079
3 × 95 + 29 Cu	38	128	1492	159	1376
3 × 120 + 41 Cu	41	148	1776	184	1637
3 × 150 + 41 Cu	44	171	2042	213	1881
3 × 185 + 57 Cu	49	196	2422	243	2237
3 × 240 + 72 Cu	54	231	2967	286	2740
3 × 300 + 88 Cu	58	267	3478	330	3229
2 × (3 × 70 + 21 Cu)	2 × 32	210	1182	262	1079
2 × (3 × 95 + 29 Cu)	2 × 38	256	1492	318	1376
2 × (3 × 120 + 41 Cu)	2 × 41	297	1776	368	1637
2 × (3 × 150 + 41 Cu)	2 × 44	343	2042	425	1881
2 × (3 × 185 + 57 Cu)	2 × 49	392	2422	486	2237
2 × (3 × 240 + 72 Cu)	2 × 54	462	2967	572	2740
2 × (3 × 300 + 88 Cu)	2 × 58	533	3478	659	3229
3 × (3 × 150 + 41 Cu)	3 × 44	514	2042	638	1881
3 × (3 × 185 + 57 Cu)	3 × 49	588	2422	728	2237
3 × (3 × 240 + 72 Cu)	3 × 54	693	2967	859	2740
3 × (3 × 300 + 88 Cu)	3 × 58	800	3478	989	3229
4 × (3 × 185 + 57 Cu)	4 × 49	784	2422	971	2237
4 × (3 × 240 + 72 Cu)	4 × 54	924	2967	1145	2740
4 × (3 × 300 + 88 Cu)	4 × 58	1067	3478	1319	3229
5 × (3 × 185 + 57 Cu)	5 × 49	980	2422	1214	2237
5 × (3 × 240 + 72 Cu)	5 × 54	1155	2967	1431	2740
5 × (3 × 300 + 88 Cu)	5 × 58	1333	3478	1648	3229
6 × (3 × 240 + 72 Cu)	6 × 54	1386	2967	1718	2740
6 × (3 × 300 + 88 Cu)	6 × 58	1600	3478	1978	3229
7 × (3 × 240 + 72 Cu)	7 × 54	1617	2967	2004	2740
7 × (3 × 300 + 88 Cu)	7 × 58	1867	3478	2308	3229
8 × (3 × 240 + 72 Cu)	8 × 54	1848	2967	2290	2740
8 × (3 × 300 + 88 Cu)	8 × 58	2133	3478	2637	3229
9 × (3 × 240 + 72 Cu)	9 × 54	2079	2967	2577	2740
9 × (3 × 300 + 88 Cu)	9 × 58	2400	3478	2967	3229
10 × (3 × 240 + 72 Cu)	10 × 54	2310	2967	2867	2740
10 × (3 × 300 + 88 Cu)	10 × 58	2667	3478	3297	3229

Copper cable		**PVC insulation Conductor temperature 70 °C**		**XLPE insulation Conductor temperature 90 °C**	
Size	⌀ **[mm]**	I_{Lmax} **[A]**	**Time const. [s]**	I_{Lmax} **[A]**	**Time const. [s]**
3 × 1.5 + 1.5	13	13	85	16	67
3 × 2.5 + 2.5	14	18	121	23	88
(3 × 4 + 4)	16	24	175	30	133
3 × 6 + 6	18	30	251	38	186
3 × 10 + 10	21	42	359	53	268
3 × 16 + 16	23	56	514	70	391
3 × 25 + 16	24	71	791	89	598
3 × 35 + 16	26	88	1000	110	760
3 × 50 + 25	29	107	1308	134	990
3 × 70 + 35	32	137	1613	171	1230
3 × 95 + 50	38	167	2046	209	1551
3 × 120 + 70	41	193	2441	241	1859
3 × 150 + 70	44	223	2820	279	2139
3 × 185 + 95	50	255	3329	319	2525
3 × 240 + 120	55	301	4073	376	3099
3 × 300 + 150	58	348	4779	435	3636
2 × (3 × 70 + 35)	2 × 32	274	1613	342	1230
2 × (3 × 95 + 50)	2 × 38	334	2046	418	1551
2 × (3 × 120 + 70)	2 × 41	386	2441	482	1859
2 × (3 × 150 + 70)	2 × 44	446	2820	558	2139
2 × (3 × 185 + 95)	2 × 50	510	3329	638	2525
2 × (3 × 240 + 120)	2 × 55	602	4073	752	3099
2 × (3 × 300 + 150)	2 × 58	696	4779	869	3636
3 × (3 × 120 + 70)	3 × 41	579	2441	723	1859
3 × (3 × 150 + 70)	3 × 44	669	2820	837	2139
3 × (3 × 185 + 95)	3 × 50	765	3329	957	2525
3 × (3 × 240 + 120)	3 × 55	903	4073	1128	3099
3 × (3 × 300 + 150)	3 × 58	1044	4779	1304	3636
4 × (3 × 150 + 70)	4 × 44	892	2820	1116	2139
4 × (3 × 185 + 95)	4 × 50	1020	3329	1276	2525
4 × (3 × 240 + 120)	4 × 55	1204	4073	1504	3099
4 × (3 × 300 + 150)	4 × 58	1391	4779	1304	3636
5 × (3 × 185 + 95)	5 × 50	1275	3329	1595	2525
5 × (3 × 240 + 120)	5 × 55	1505	4073	1880	3099
5 × (3 × 300 + 150)	5 × 58	1739	4779	2173	3636
6 × (3 × 185 + 95)	6 × 50	1530	3329	1914	2525
6 × (3 × 240 + 120)	6 × 55	1806	4073	2256	3099
6 × (3 × 300 + 150)	6 × 58	2087	4779	2608	3636
7 × (3 × 240 + 120)	7 × 55	2107	4073	2632	3099
7 × (3 × 300 + 150)	7 × 58	2435	4779	3043	3636
8 × (3 × 240 + 120)	8 × 55	2408	4073	3008	3099
8 × (3 × 300 + 150)	8 × 58	2783	4779	3477	3636

Electrical power network specification

Supply voltage (U_1)	400 V AC units: 380/400/415 V AC 3-phase ± 10%. This is indicated in the type designation label as typical input voltage (3~400 V AC). 500 V AC units: 380/400/440/460/480/500 V AC 3-phase ± 10%. This is indicated in the type designation label as typical input voltage (3~500 V AC).
Network type	TN (grounded) and IT (ungrounded) systems
Short-circuit withstand strength (IEC/EN 61439-1)	IEC/EN 61439-1:2009 For supply units with one D8D module: Rated peak withstand current I_{pk} = 105 kA Rated short-time withstand current I_{cw} = 50 kA/1 s For supply units with one D6D/D7D module: Rated peak withstand current I_{pk} = 73.5 kA Rated short-time withstand current I_{cw} = 35 kA/1 s Maximum allowable prospective shortcircuit current I_{cc} is 65 kA. In this case, the input cable must be equipped with fuses as follows: • maximum 315 A gG* for frame size D6D • maximum 800 A gG* for frame size D7D *) Type gG according to IEC 60269
Frequency (f_1)	50/60 Hz, variation ± 5% of the nominal frequency
Imbalance	Maximum 3% of nominal phase-to-phase voltage
Fundamental power factor (cos phi$_1$)	0.98 (at nominal load)

DC connection data

Voltage (U_2)	ACS880-304-xxxxA-3+A003: 513 … 560 V DC. This is indicated in the type designation label as typical output voltage level 540 V DC. ACS880-304-xxxxA-5+A003: 513 … 675 V DC. This is indicated in the type designation label as typical output voltage levels 540/648/675 V DC.

Efficiency

> 98%

Control unit connection data

See chapter *Control units of the drive (page 153)*.

Protection classes

Degrees of protection (IEC/EN 60529)	IP00
Overvoltage category (IEC/EN 60664-1)	III
Protective class (IEC/EN 61800-5-1)	I

Ambient conditions

	Operation installed for stationary use	Storage in protective package	Transportation in protective package
Altitude above sea level	0 … 4000 m (0 … 13123 ft) with derating above 1000 m.	-	-
Air temperature	0 … +40 °C (+32 … +104 °F), no condensation allowed.	-40 … +70 °C (-40 … +158 °F)	-40 … +70 °C (-40 … +158 °F)
	+40 … +50 °C (+104 … +122 °F) with output derating 1%/1 °C (1.8 °F). For more information, see *Surrounding air temperature derating (page 140)*.		
Relative humidity	Maximum 95%, no condensation allowed.	Maximum 95%, no condensation allowed.	Maximum 95%, no condensation allowed.
Contamination	IEC/EN 60721-3-3:2002: Classification of environmental conditions - Part 3-3: Classification of groups of environmental parameters and their severities - Stationary use of weather protected locations	IEC 60721-3-1	IEC 60721-3-2
• Chemical gases	Class 3C2	Class 1C2	Class 2C2
• Solid particles	Class 3S1 with IP20/21, 3S2 with higher IP class. No conductive dust allowed.	Class 1S3 (packing must support this, otherwise 1S2)	Class 2S2
Vibration	IEC 61800-5-1 IEC 60068-2-6:2007, EN 60068-2-6:2008 Environmental testing Part 2: Tests -Test Fc: Vibration (sinusoidal) 10 … 57 Hz, max. 0.075 mm amplitude 57 … 150 Hz 1 *g* Tested in ABB multidrive cabinet (ACS880-x07) according to: Max. 1 mm (0.04 in) (5 … 13.2 Hz), max. 0.7 *g* (13.2 … 100 Hz) sinusoidal	IEC/EN 60721-3-1:1997	IEC/EN 60721-3-1:1997
Shock IEC 60068-2-27:2008, EN 60068-2-27:2009 Environmental testing - Part 2-27: Tests - Test Ea and guidance: Shock	Not allowed	With packing max. 100 m/s^2 (330 ft./s^2) 11 ms	With packing max. 100 m/s^2 (330 ft./s^2) 11 ms

Materials

Module housing	• Zinc coated steel sheet • Front plate covered with Lexan 8B35 polycarbonate film, color PMS 1C Cool Gray / RAL 9002 and PMS Process Black
Fire safety of materials (IEC 60332-1)	Insulating materials and non-metallic items: mostly self-extinctive
Package	• Plywood base, corrugated cardboard, PET straps. • Product wrapping: polyethylene sheet or VCI protection bag
Disposal	The main parts of the drive can be recycled to preserve natural resources and energy. Product parts and materials should be dismantled and separated. Generally all metals, such as steel, aluminum, copper and its alloys, and precious metals can be recycled as material. Plastics, rubber, cardboard and other packaging material can be used in energy recovery. Printed circuit boards and large electrolytic capacitors need selective treatment according to IEC 62635 guidelines. To aid recycling, plastic parts are marked with an appropriate identification code. Contact your local ABB distributor for further information on environmental aspects and recycling instructions for professional recyclers. End of life treatment must follow international and local regulations.

Standards

See *ACS880 multidrive cabinets and modules electrical planning instructions* (3AUA0000102324 [English]).

Markings

See *ACS880 multidrive cabinets and modules electrical planning instructions* (3AUA0000102324 [English]).

Disclaimers

Generic disclaimer

The manufacturer shall have no obligation with respect to any product which (i) has been improperly repaired or altered; (ii) has been subjected to misuse, negligence or accident; (iii) has been used in a manner contrary to the manufacturer’s instructions; or (iv) has failed as a result of ordinary wear and tear.

Cybersecurity disclaimer

This product is designed to be connected to and to communicate information and data via a network interface. It is Customer's sole responsibility to provide and continuously ensure a secure connection between the product and Customer network or any other network (as the case may be). Customer shall establish and maintain any appropriate measures (such as but not limited to the installation of firewalls, application of authentication measures, encryption of data, installation of anti-virus programs, etc) to protect the product, the network, its system and the interface against any kind of security breaches, unauthorized access, interference, intrusion, leakage and/or theft of data or information. ABB and its affiliates are not liable for damages and/or losses related to such security breaches, any unauthorized access, interference, intrusion, leakage and/or theft of data or information.

11

Control units of the drive

Contents of this chapter

This chapter

- describes the connections of the control unit
- contains the specifications of the inputs and outputs of the control unit.

General

A ZCU-14 control unit controls the supply unit. The ZCU-14 control unit consists of a ZCON-14 control board contained in a plastic housing.

ZCU-14 layout

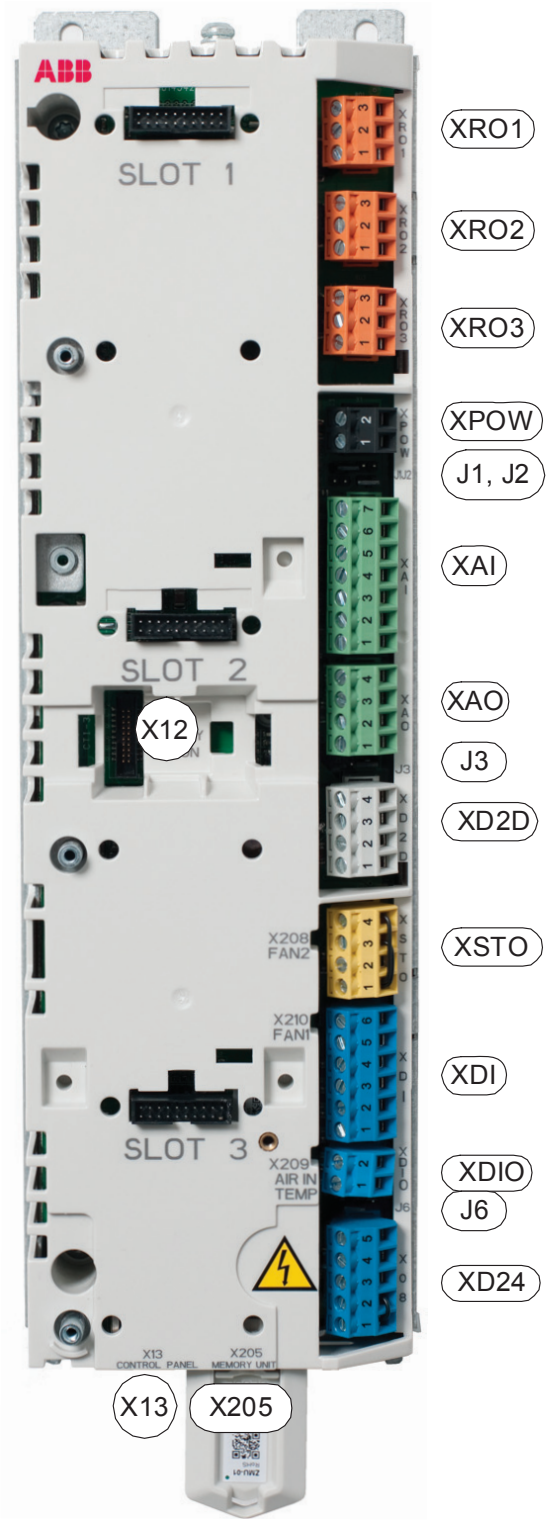

	Description
XPOW	External power input
XAI	Analog inputs
XAO	Analog outputs
XD2D	Drive-to-drive link
XRO1	Relay output RO1
XRO2	Relay output RO2
XRO3	Relay output RO3
XD24	Digital input interlock (DIIL) and +24 V output
XDIO	Digital input/outputs
XDI	Digital inputs
XSTO	Safe torque off connection (inverter unit only). **Note:** This connection only acts as a true Safe torque off input when the ZCU is controlling an inverter unit. When the ZCU is controlling a supply unit, de-energizing the inputs will stop the unit but will not constitute a true safety function.
X12	Connection for FSO-xx safety functions module (inverter unit only).
X13	Control panel connection
X202	Option slot 1
X203	Option slot 2
X204	Option slot 3
X205	Memory unit connection (memory unit inserted in the drawing)
J1, J2	Voltage/Current selection jumpers (J1, J2) for analog inputs
J3	Drive-to-drive link termination switch (J3)
J6	Common digital input ground selection jumper (J6).

ZCU-14 default I/O connection diagram

The diagram shows the control connections of the supply unit, and the default meaning or use of the signals in the supply unit control program.

The wire size accepted by all screw terminals (for both stranded and solid wire) is 0.5 … 2.5 mm^2 (24…12 AWG). The torque is 0.5 N·m (5 lbf·in).

Note: As the same control program is in use with different diode supply types, the default connections shown are not applicable to them all. For example, some units have a DC link charging circuit, some do not. The default parameter settings and I/O connections are valid for the version without the charging circuit.

Terminal			**Description**	
XRO1, XRO2, XRO3			Relay outputs	
13	13	NO	Norm. open	XRO1: **Running**[1] (Energized = running) 250 V AC / 30 V DC, 2 A
12	12	COM	Common	
11	11	NC	Norm. closed	
23	23	NO	Norm. open	XRO2: **Fault (-1)**[1] (Energized = no fault) 250 V AC / 30 V DC, 2 A
22	22	COM	Common	
21	21	NC	Norm. closed	
33	33	NO	Norm. open	XRO3: **MCB ctrl**[2] (Energized = closes main contactor/breaker) 250 V AC / 30 V DC, 2 A
32	32	COM	Common	
31	31	NC	Norm. closed	
XPOW			External power input	
2	2	GND	24 V DC, 2 A minimum (without optional modules)	
1	1	+24VI		
J1, J2			AI current/voltage selection	
	J1		AI1 current/voltage selection jumper	
	J2		AI2 current/voltage selection jumper	
XAI			Analog inputs, reference voltage output	
7	7	AI2-	Not in use by default. 0(4)…20 mA, R_{in} = 100 ohm[3]	
6	6	AI2+		
5	5	AI1-	Not in use by default. 0(2)…10 V, R_{in} > 200 kohm[4]	
4	4	AI1+		
3	3	AGND	Ground	
2	2	-VREF	-10 V DC, R_L 1…10 kohm	
1	1	+VREF	10 V DC, R_L 1…10 kohm	
XAO			Analog outputs	
4	4	AGND	**Zero** (no signal indicated)[1] 0…20 mA, R_L < 500 ohm	
3	3	AO2		
2	2	AGND	**Zero** (no signal indicated)[1] 0…20 mA, R_L < 500 ohm	
1	1	AO1		
J3			Drive-to-drive link termination	
ON	J3		Drive-to-drive link termination switch[5]	

Terminal			Description
XD2D			Drive-to-drive link
4	4	SHIELD	Not in use by default
3	3	BGND	
2	2	A	
1	1	B	
XSTO			Safe torque off[6]
4	4	IN2	Factory connection. Both circuits must be closed for the unit to start (IN1 and IN2 must be connected to OUT).
3	3	IN1	
2	2	SGND	
1	1	OUT	
XDI			Digital inputs
6	6	DI6	**Reset**[1] (0 -> 1 = fault reset)
5	5	DI5	Not in use by default. Can be used for eg. earth fault monitoring.
4	4	DI4	**Auxiliary circuit breaker fault**[1]
3	3	DI3	**MCB feedback**[2] (0 = main contactor/breaker open)
2	2	DI2	**Run enable**[1] (1 = run enable)
1	1	DI1	**Temp fault**[1] (0 = overtemperature)
XDIO			Digital input/outputs
2	2	DIO2	Not in use by default
1	1	DIO1	Not in use by default
XD24			Auxiliary voltage output
5	5	DIOGND	Digital input/output ground
4	4	+24VD	+24 V DC 200 mA[7]
3	3	DICOM	Digital input ground
2	2	+24VD	+24 V DC 200 mA[7]
1	1	DIIL	Not in use by default. Can be used for eg. emergency stop.
J6			Ground selection
● ● ○	J6		Ground selection jumper[8]
X12			Not in use in supply units
X13			Control panel connection
X205			Memory unit connection

[1] Default use of the signal in the control program. The use can be changed by a parameter. See also the delivery-specific circuit diagrams.

[2] Use of the signal in the control program (fixed). See also the delivery-specific circuit diagrams.

[3] Current [0(4)…20 mA, R_{in} = 100 ohm] or voltage [0(2)…10 V, R_{in} > 200 kohm] input selected by jumper J2. Change of setting requires reboot of control unit.

[4] Current [0(4)…20 mA, R_{in} = 100 ohm] or voltage [0(2)…10 V, R_{in} > 200 kohm] input selected by jumper J1. Change of setting requires reboot of control unit.

[5] Must be set to ON when the supply unit is the first or last unit on the drive-to-drive (D2D) link. On intermediate units, set termination to OFF.

[6] This input only acts as a true Safe torque off input in inverter units. In other applications (such as a supply or brake unit), de-energizing the IN1 and/or IN2 terminal will stop the unit but not constitute a true safety function.

[7] Total load capacity of these outputs is 4.8 W (200 mA at 24 V) minus the power taken by DIO1 and DIO2.

8) Determines whether DICOM is separated from DIOGND (ie, common reference for digital inputs floats).

[••]○ DICOM connected to DIOGND

○[••] DICOM and DIOGND separate

External power supply for the control unit (XPOW)

The control unit is powered from a 24 V DC, 2 A supply through terminal block XPOW.

Using an external supply is recommended if

- the control unit needs to be kept operational during input power breaks, for example, because of continuous fieldbus communication
- immediate restart is needed after a power break (that is, no control unit power-up delay is allowed).

Safe torque off (XSTO)

Note: The XSTO input only acts as a true Safe torque off input on the inverter control unit. De-energizing the IN1 and/or IN2 terminals of other units (supply, DC/DC converter, or brake unit) will stop the unit but not constitute a true safety function.

FSO-xx safety functions module connection (X12)

See the user manual of the FSO-xx module. Note that the FSO-xx safety functions module is not in use in supply, DC/DC converter or brake units.

Connector data

Power supply (XPOW)	Connector pitch 5 mm, wire size 2.5 mm^2 24 V (±10%) DC, 2 A External power input.
Relay outputs RO1…RO3 (XRO1…XRO3)	Connector pitch 5 mm, wire size 2.5 mm^2 250 V AC / 30 V DC, 2 A Protected by varistors
+24 V output (XD24:2 and XD24:4)	Connector pitch 5 mm, wire size 2.5 mm^2 Total load capacity of these outputs is 4.8 W (200 mA / 24 V) minus the power taken by DIO1 and DIO2.
Digital inputs DI1…DI6 (XDI:1…XDI:6)	Connector pitch 5 mm, wire size 2.5 mm^2 24 V logic levels: “0” < 5 V, “1” > 15 V R_{in}: 2.0 kohm Input type: NPN/PNP (DI1…DI5), NPN (DI6) Hardware filtering: 0.04 ms, digital filtering up to 8 ms DI6 (XDI:6) can alternatively be used as an input for a PTC sensor. “0” > 4 kohm, “1” < 1.5 kohm. I_{max}: 15 mA (DI1…DI5), 5 mA (DI6)
Start interlock input DIIL (XD24:1)	Connector pitch 5 mm, wire size 2.5 mm^2 24 V logic levels: “0” < 5 V, “1” > 15 V R_{in}: 2.0 kohm Input type: NPN/PNP Hardware filtering: 0.04 ms, digital filtering up to 8 ms
Digital inputs/outputs DIO1 and DIO2 (XDIO:1 and XDIO:2) Input/output mode selection by parameters. DIO1 can be configured as a frequency input (0…16 kHz with hardware filtering of 4 microseconds) for 24 V level square wave signal (sinusoidal or other wave form cannot be used). DIO2 can be configured as a 24 V level square wave frequency output. See the firmware manual, parameter group 111/11.	Connector pitch 5 mm, wire size 2.5 mm^2 As inputs: 24 V logic levels: “0” < 5 V, “1” > 15 V. R_{in}: 2.0 kohm. Filtering: 1 ms. As outputs: Total output current from +24VD is limited to 200 mA 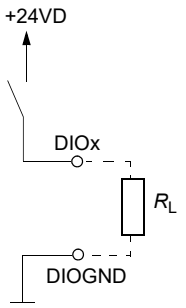
Reference voltage for analog inputs +VREF and -VREF (XAI:1 and XAI:2)	Connector pitch 5 mm, wire size 2.5 mm^2 10 V ±1% and –10 V ±1%, R_{load} 1…10 kohm Maximum output current: 10 mA
Analog inputs AI1 and AI2 (XAI:4 … XAI:7). Current/voltage input mode selection by jumpers	Connector pitch 5 mm, wire size 2.5 mm^2 Current input: –20…20 mA, R_{in} = 100 ohm Voltage input: –10…10 V, R_{in} > 200 kohm Differential inputs, common mode range ±30 V Sampling interval per channel: 0.25 ms Hardware filtering: 0.25 ms, adjustable digital filtering up to 8 ms Resolution: 11 bit + sign bit Inaccuracy: 1% of full scale range

Analog outputs AO1 and AO2 (XAO)	Connector pitch 5 mm, wire size 2.5 mm^2 0…20 mA, R_{load} < 500 ohm Frequency range: 0…300 Hz Resolution: 11 bit + sign bit Inaccuracy: 2% of full scale range
XD2D connector	Connector pitch 5 mm, wire size 2.5 mm^2 Physical layer: RS-485 Transmission rate: 8 Mbit/s Cable type: Shielded twisted-pair cable with a twisted pair for data and a wire or another pair for signal ground (nominal impedance 100 … 165 ohm, for example Belden 9842) Maximum length of link: 50 m (164 ft) Termination by jumper
Safe torque off connection (XSTO)	Connector pitch 5 mm, wire size 2.5 mm^2 Input voltage range: -3…30 V DC Logic levels: “0” < 5 V, “1” > 17 V. **Note:** For the unit to start, both connections must be “1”. This applies to all control units (including drive, inverter, supply, brake, DC/DC converter etc. control units), but true Safe torque off functionality is only achieved through the XSTO connector of the drive/inverter control unit. EMC (immunity) according to IEC 61326-3-1
Control panel connection (X13)	Connector: RJ-45 Cable length < 3 m
The terminals of the control unit fulfill the Protective Extra Low Voltage (PELV) requirements. The PELV requirements of a relay output are not fulfilled if a voltage higher than 48 V is connected to the relay output.	

ZCU-1x ground isolation diagram

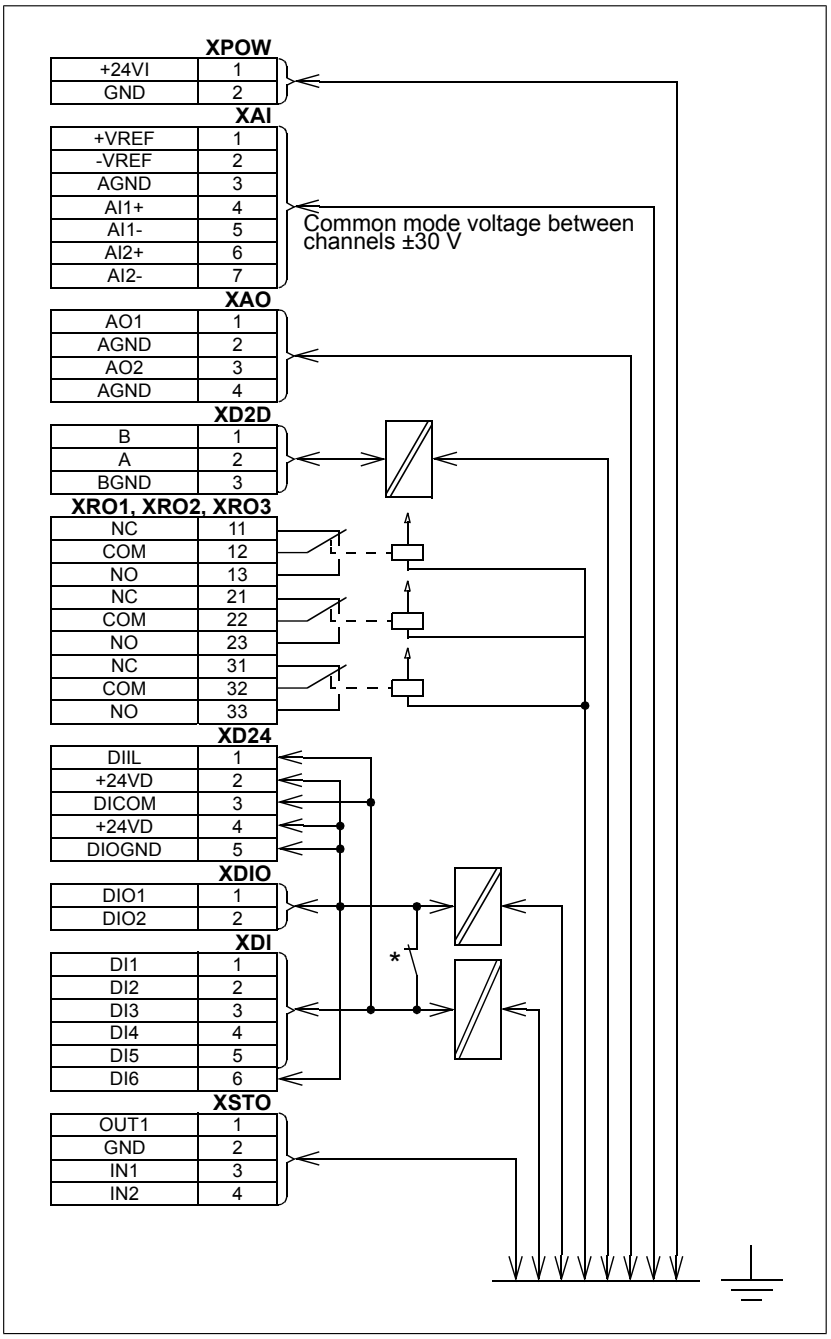

* Ground selector (J6) settings

All digital inputs share a common ground (DICOM connected to DIOGND). This is the default setting.

Ground of digital inputs DI1…DI5 and DIIL (DICOM) is isolated from DIO signal ground (DIOGND). Isolation voltage 50 V.

12

Dimension drawings

Contents of this chapter

This chapter shows dimensions of the ACS880-304…+A003 diode supply modules and accessories.

Diode supply module (frame D6D)

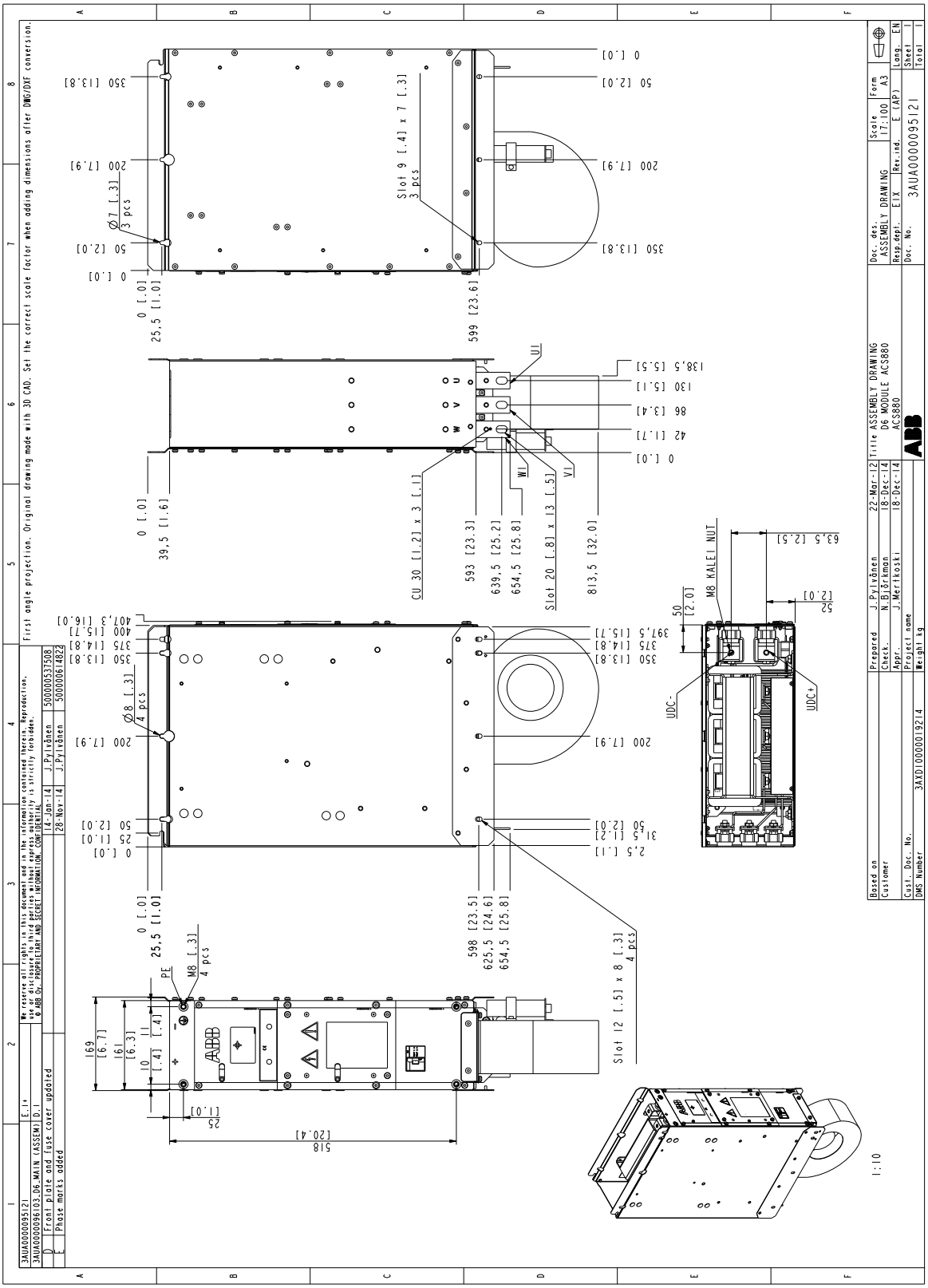

Diode supply module (frame D7D)

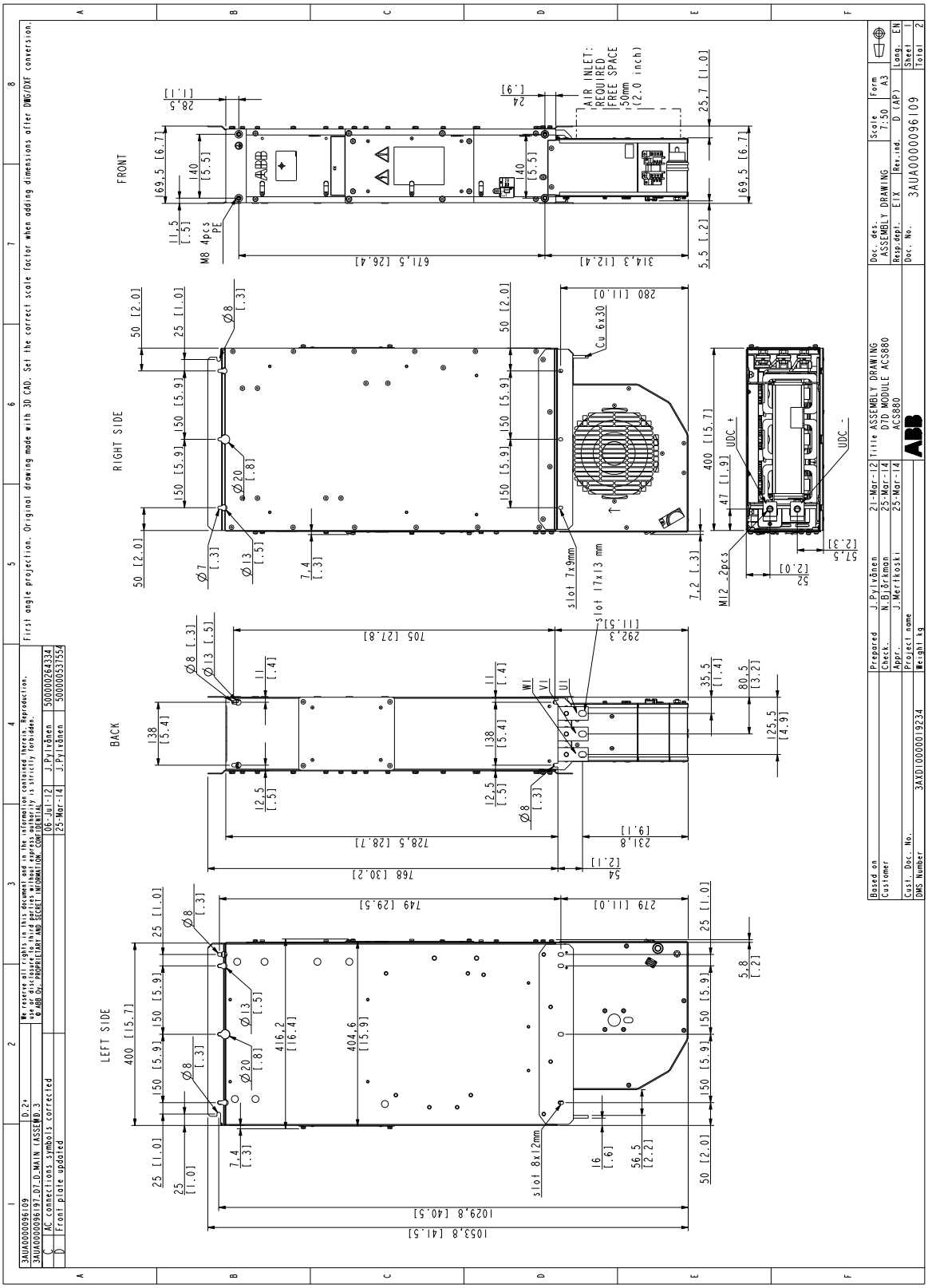

Diode supply module (frame D8D)

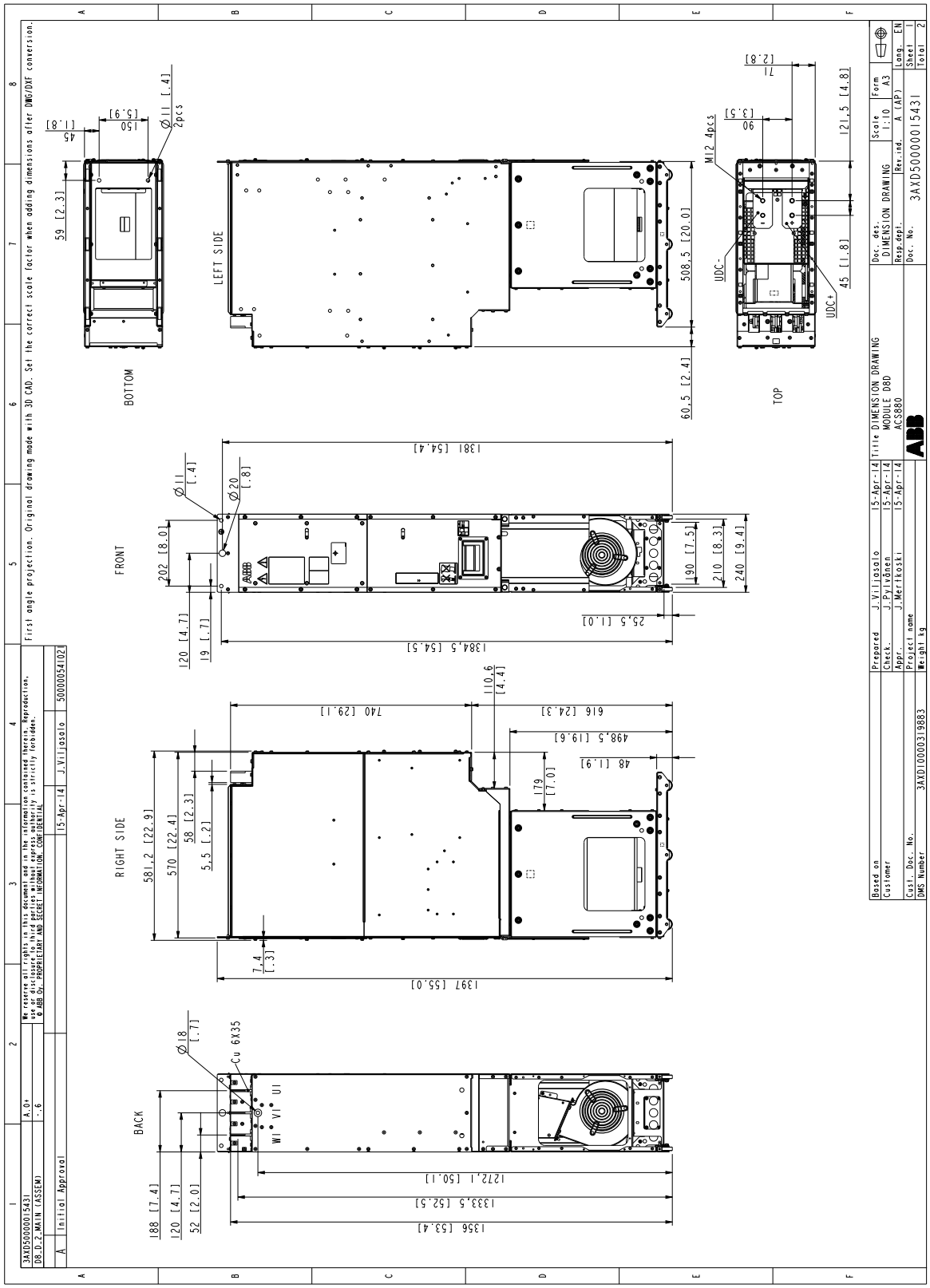

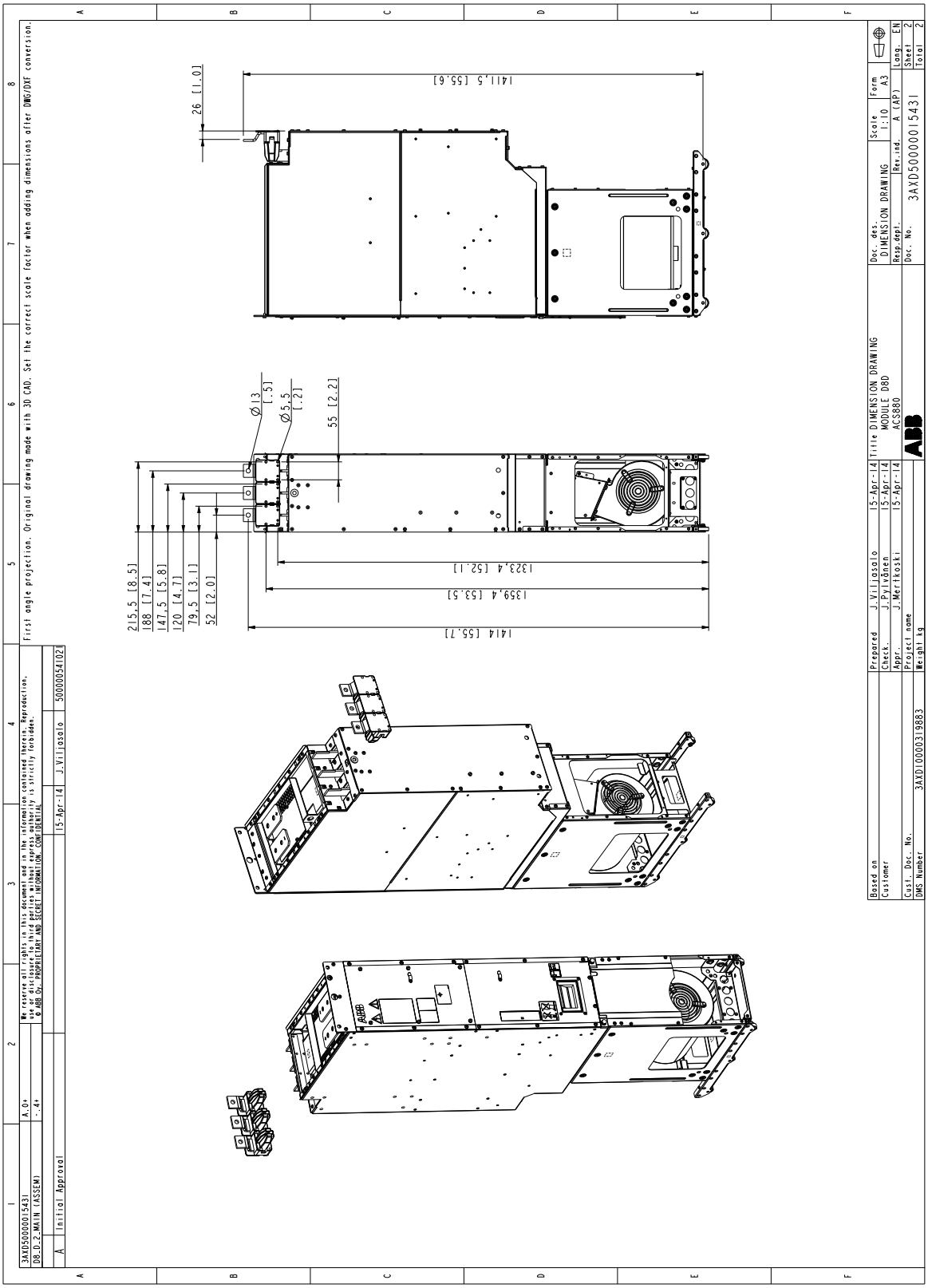
26 [1.0]
1411,5 [55.6]
Ø13
[.5]
Ø5.5
[.2]
55 [2.2]
215,5 [8.5]
188 [7.4]
147,5 [5.8]
120 [4.7]
79,5 [3.1]
52 [2.0]
1323,4 [52.1]
1359,4 [53.5]
1414 [55.7]
3AXD50000015431
D8.D.2.MAIN (ASSEM)
A.0+
-.4+
We reserve all rights in this document and in the information contained therein. Reproduction, use or disclosure to third parties without express authority is strictly forbidden. © ABB Oy. PROPRIETARY AND SECRET INFORMATION. CONFIDENTIAL
15-Apr-14
J.Viljasalo
50000054102
A
Initial Approval
First angle projection. Original drawing made with 3D CAD. Set the correct scale factor when adding dimensions after DWG/DXF conversion.
Based on
Customer
Cust. Doc. No.
DMS Number
3AXD10000319883
Prepared
J.Viljasalo
15-Apr-14
Check.
J.Pylväänen
15-Apr-14
Appr.
J.Merikoski
15-Apr-14
Project name
Weight kg
Title DIMENSION DRAWING
MODULE D8D
ACS880
ABB
Doc. des.
DIMENSION DRAWING
Resp.dept.
Rev.ind.
A (AP)
Doc. No.
3AXD50000015431
Scale
1:10
Form
A3
Lang.
EN
Sheet
2
Total
2

Quick connector

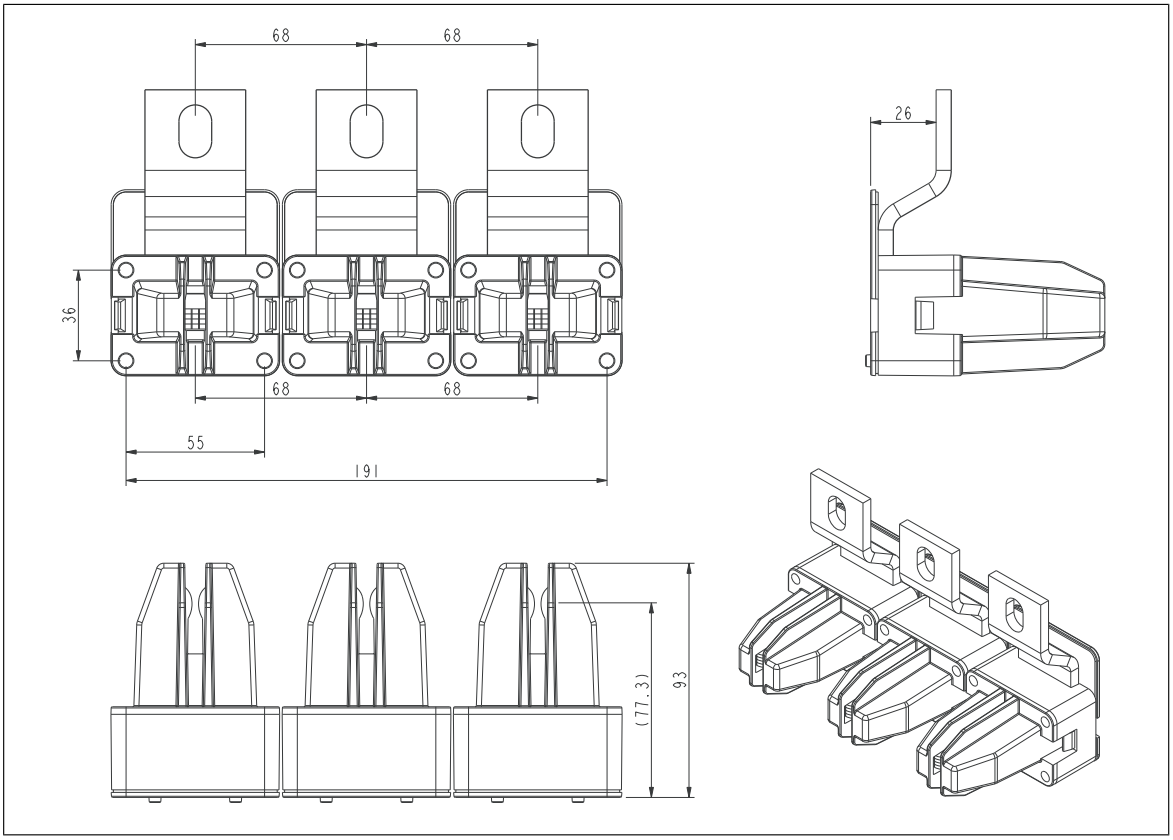

Dimensions in mm

1 mm = 0.0394 in

Main switch-disconnectors

OS250D03

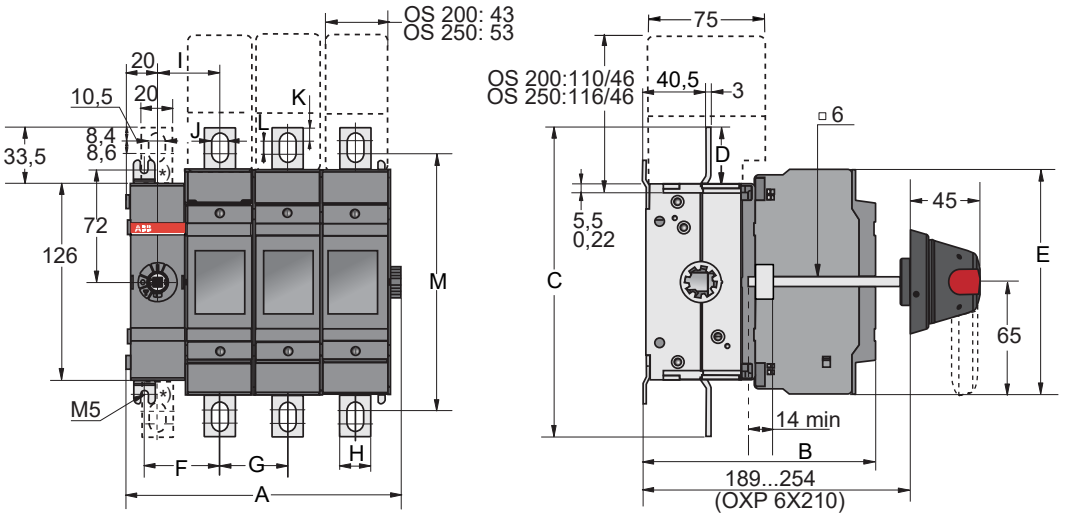

75614664

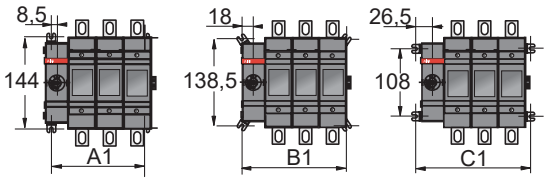

www.abb.com

M00008/OS200_250_01_04 H

	OS250			
	D01/B01	D02/B02	D03/B03	D04/B04
A	99,5	153,5	207,5	261,5
B	154	154	154	154
C	193	193	193	193
D	33,5	33,5	33,5	33,5
E	148,5	148,5	148,5	148,5
F	53,5	53,5	53,5	53,5
G	-	54	54	54
H	25	25	25	25
I	45	45	45	45
J	11	11	11	11
K	11,5	11,5	11,5	11,5
L	4	4	4	4
M	162	162	162	162
A1	70,5	124,5	178,5	232,5
B1	89,5	143,5	197,5	251,5
C1	106,5	160,5	214,5	268,5

Dimensions in mm

1 mm = 0.0394 in

OS400J03

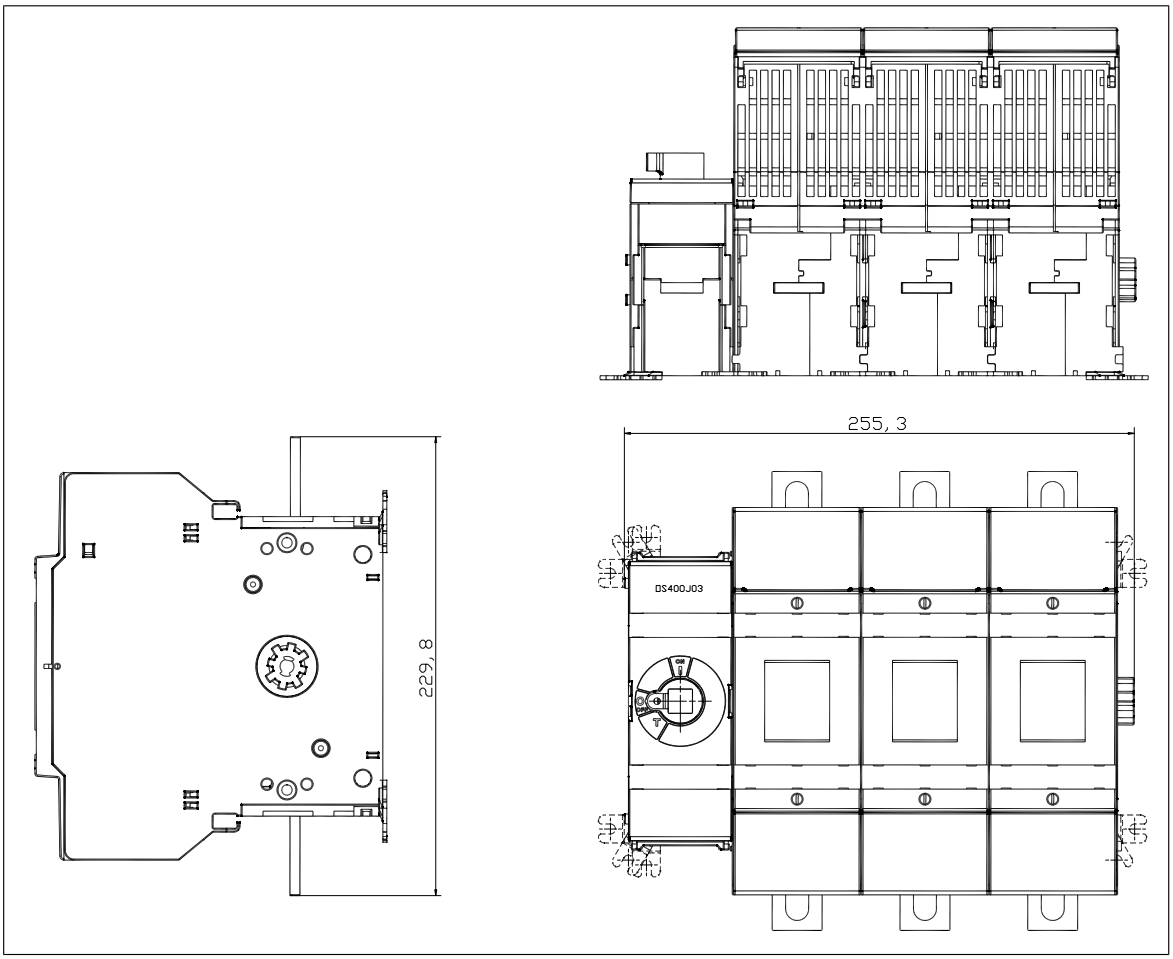

Dimensions in mm

1 mm = 0.0394 in

OS630D12 and OS600J12

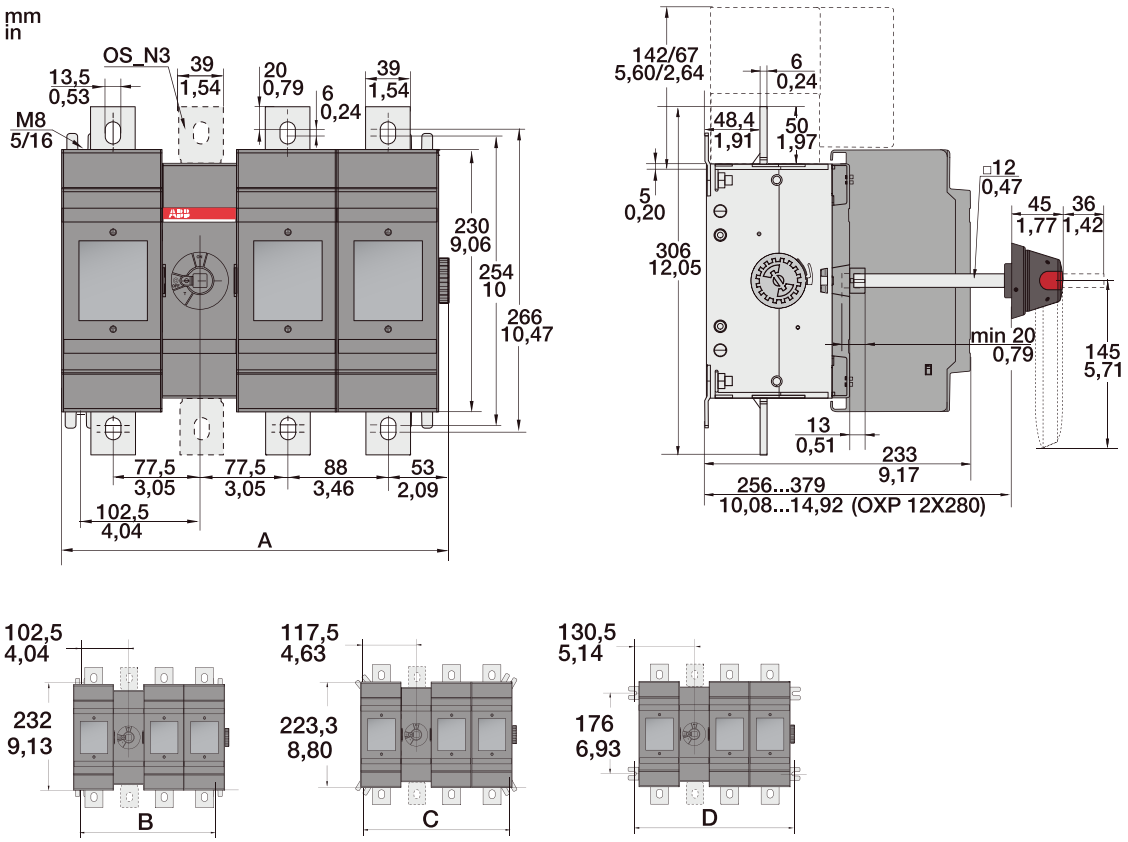

	D/B/J/L11	D/B/J/L12	D/B/J/L13	D/B/J/L22
A	253/9,96	341/13,43	429/16,89	429/16,89
B	205/8,07	293/11,54	381/15,00	381/15,00
C	235/9,25	323/12,72	411/16,18	411/16,18
D	261/10,28	349/13,74	437/17,20	437/17,20

www.abb.com

OT1000E03, OT1250E03 and OT1200U03

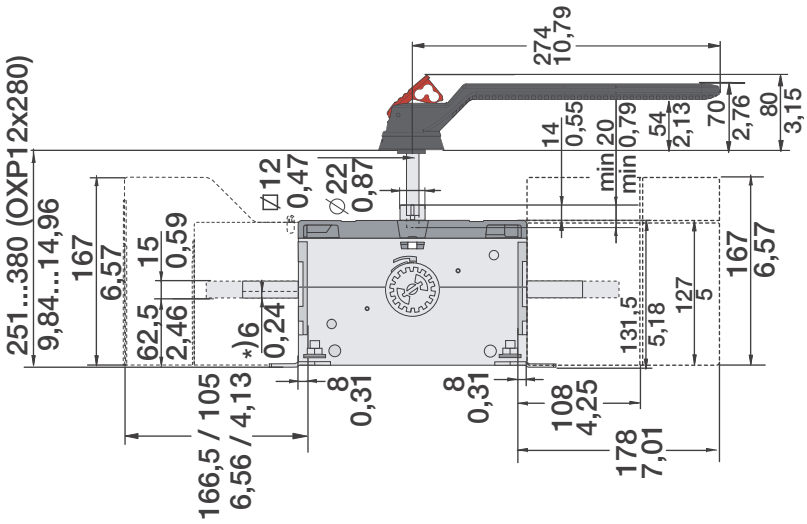

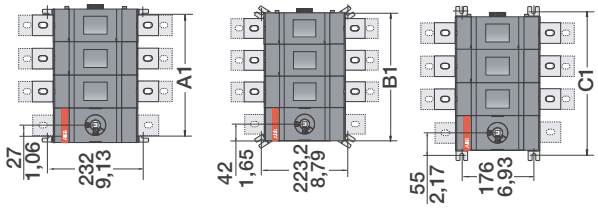

www.abb.com

Dimensions in mm
1 mm = 0.0394 in

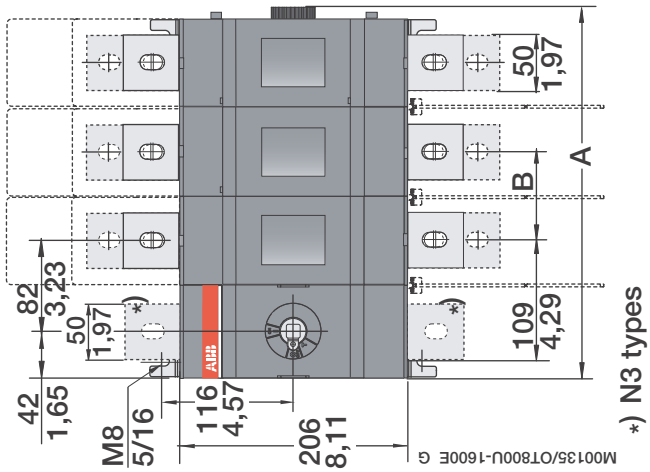

OT 1000/ 1250/ 1600E_ OT 800/ 1200U_													
		01	02	03	04	11	12	13	22	03W4	04W4	03W8	04W8
A	mm in	174,50 6,87	254,50 10,02	334,50 13,17	414,50 16,32	254,50 10,02	334,50 13,17	414,50 16,32	414,50 16,32	454,50 17,89	594,50 23,41	544,50 21,44	729,50 28,72
B	mm in		80 3,15	80 3,15	80 3,15		80 3,15	80 3,15	80 3,15	140 5,51	140 5,51	185 7,28	185 7,28
A1	mm in	134 5,28	214 8,43	294 11,57	374 14,72	214 8,43	294 11,57	374 14,72	374 14,72	414 16,30	554 21,81	504 19,84	689 27,13
B1	mm in	164 6,46	244 9,61	324 12,76	404 15,91	244 9,61	324 12,76	404 15,91	404 15,91	444 17,48	584 22,99	534 21,02	719 28,31
C1	mm in	190 7,48	270 10,63	350 13,78	430 16,93	270 10,63	350 13,78	430 16,93	430 16,93	470 18,50	610 24,02	560 22,05	745 29,33

Main switch-disconnector handles

OHB65J6, OHB145J12

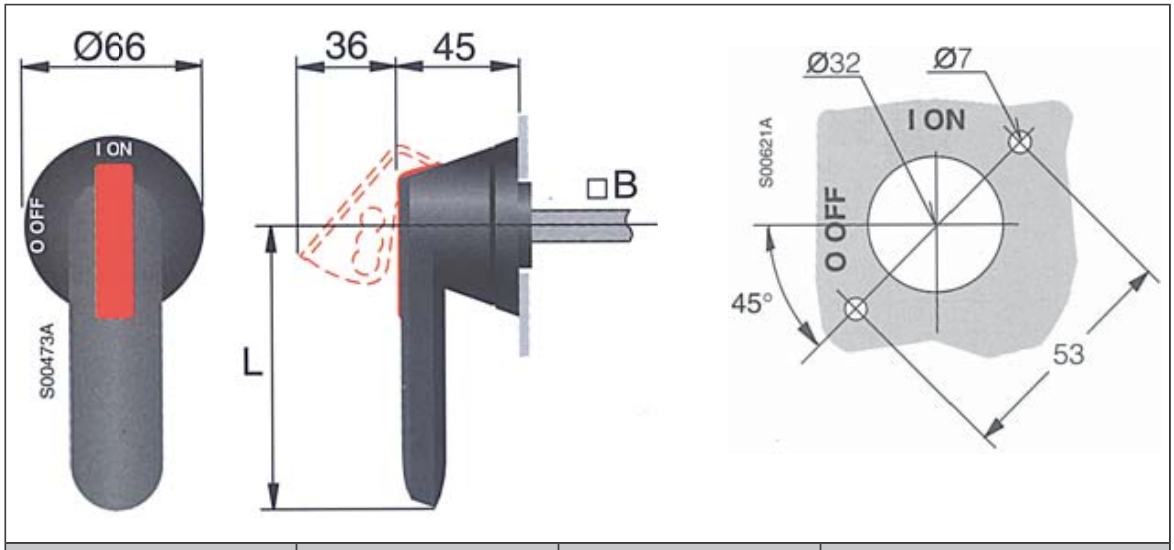

Handle type	L (mm)	B (mm)	Notes
OHB65J6	65	6 × 6	Used with OS250D03
OHB145J12	145	12 × 12	Used withOS630D12 and OS600J12

OHB274J12

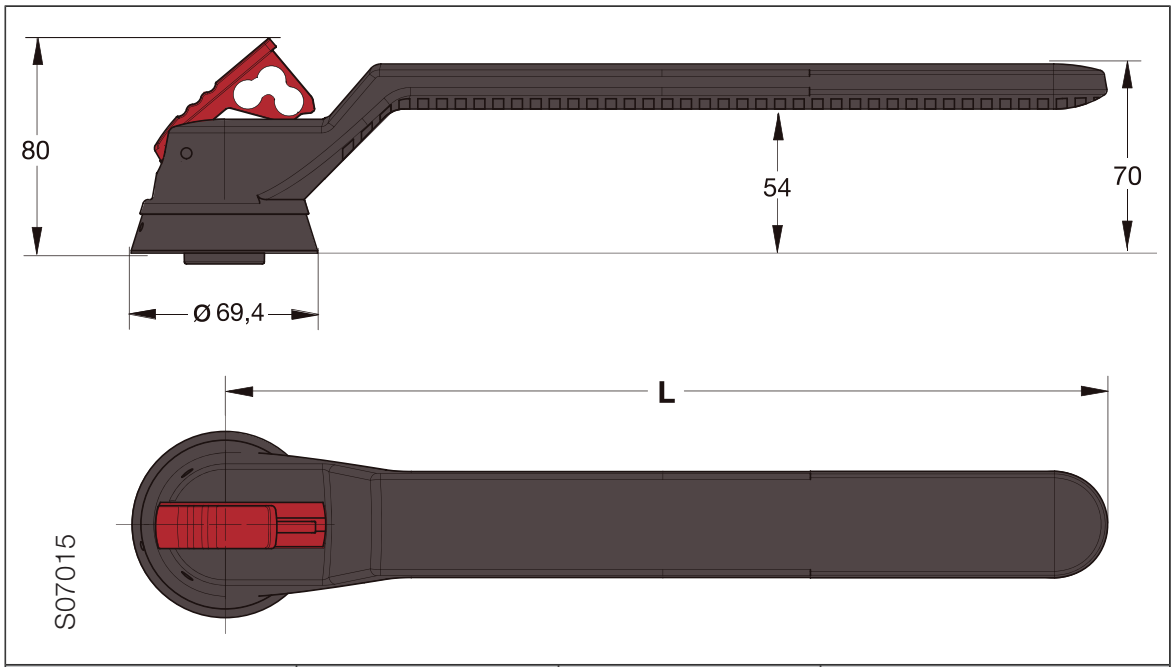

Handle type	L (mm)	B (mm)	Notes
OHB274J12	274	12 × 12	Used with OT1000E03, OT1250E03, OT1200U03

The drilling pattern is the same as OHB65/95/145.

Auxiliary contact OA1G10

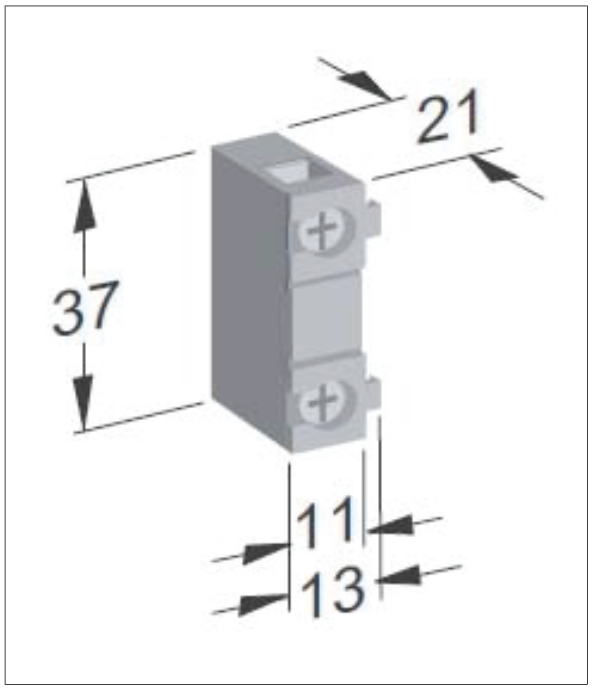

2×0.75…2.5 mm² (2×18…14 AWG)

0.8 N·m (7 lbf·in)

Pozidriv M3.5 Form 2

Main contactors

AF146-30-22B-13

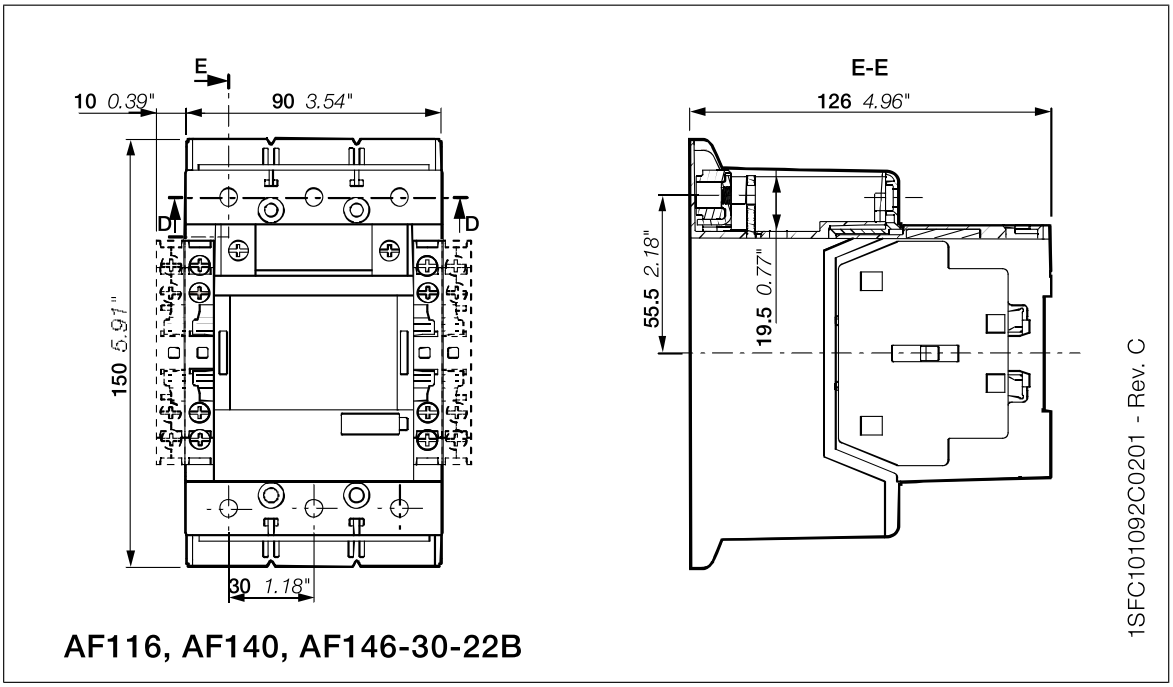

AF460-30-22-70

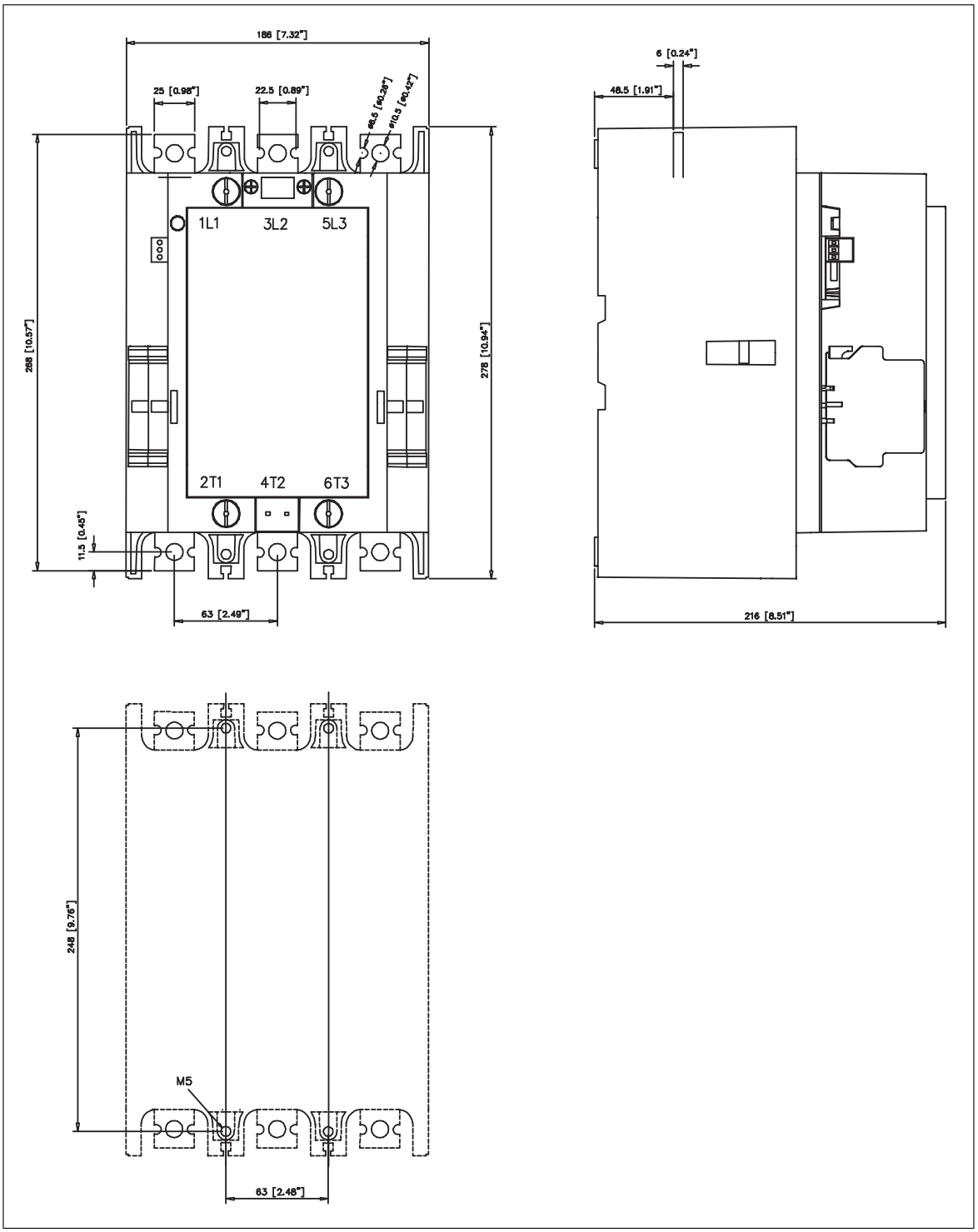

For drilling patterns, see www.abb.com.

AF750-30-22-70

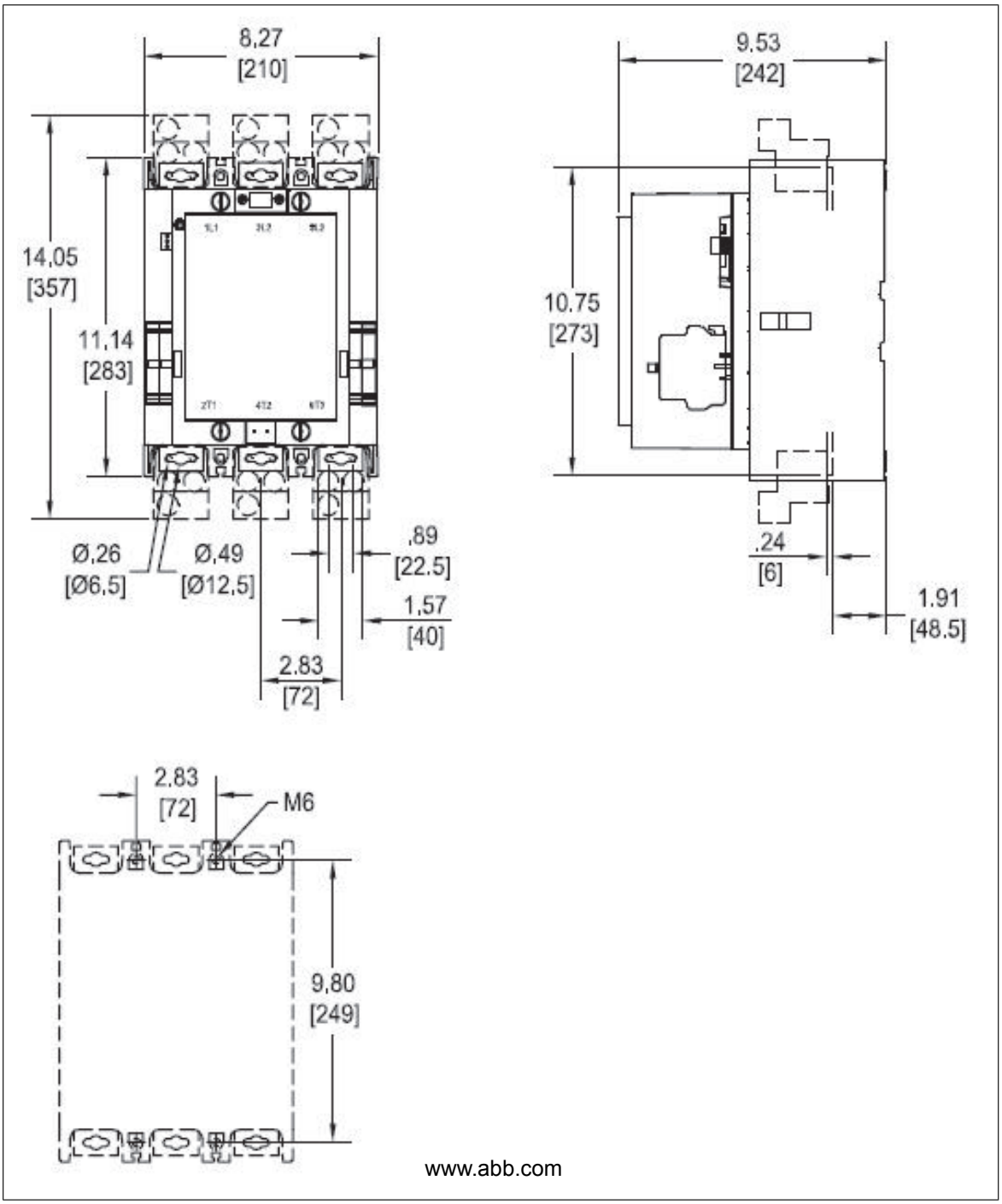

AF1250-30-22-70

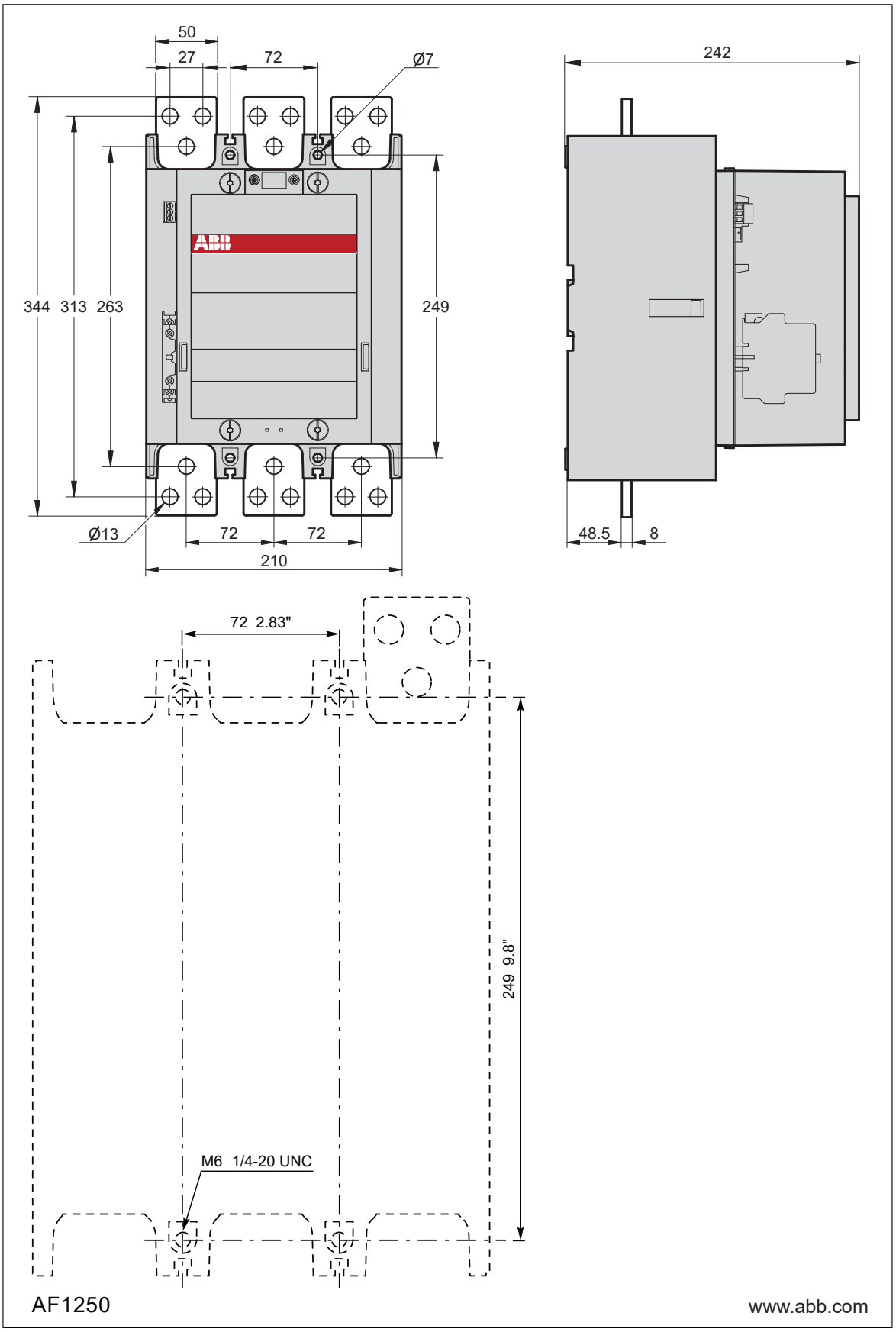

Dimensions in mm

1 mm = 0.0394 in

AC fuses

170M3814D, 170M3817D, 170M6809D, 170M6812D

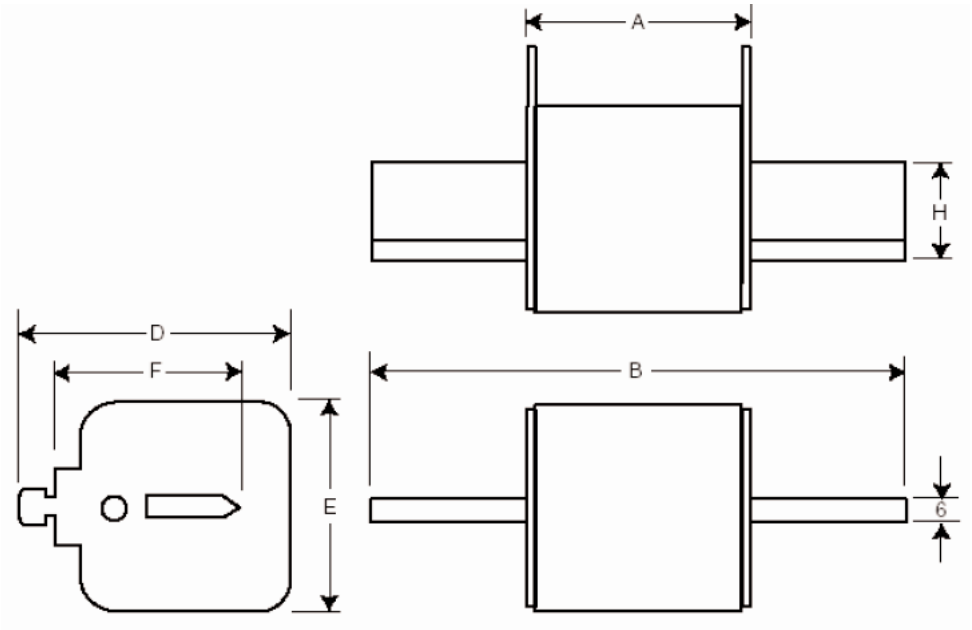

Size	A	B	D	E	F	H
1*	69	135	58	76	40	20
3	68	150	88	45	60	33

1 mm = 0.0394 in / 1 in = 25.4 mm

170M6415 and 170M6419

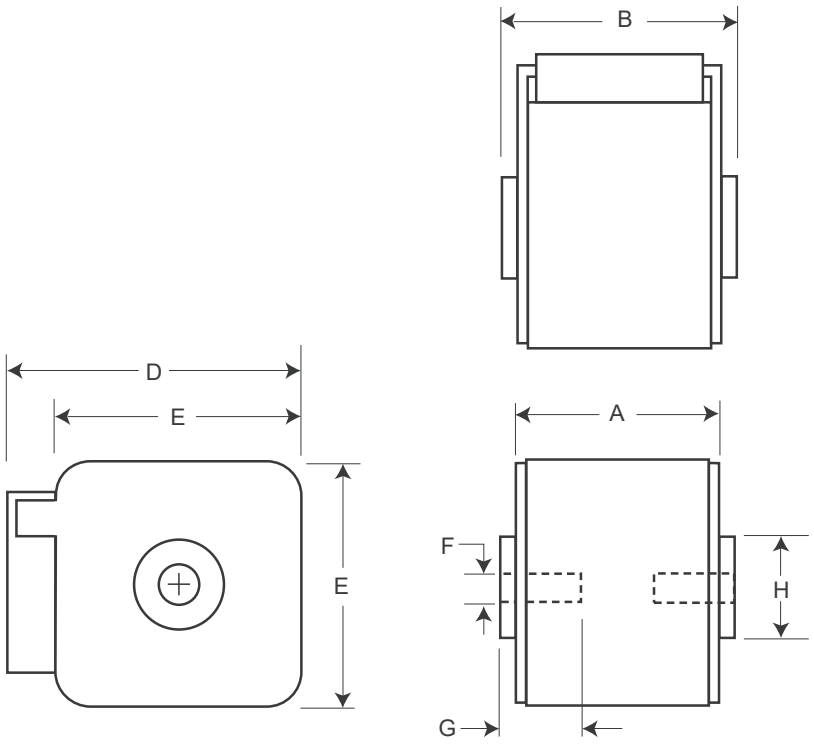

www.cooperindustries.com

Size	A	B	D	E	F	G	H
3	51	53	92	76	M12	10	⌀30
3*	51	65	92	76	M12	10	⌀30

Dimensions in mm

1 mm = 0.0394 in

DFJ-250

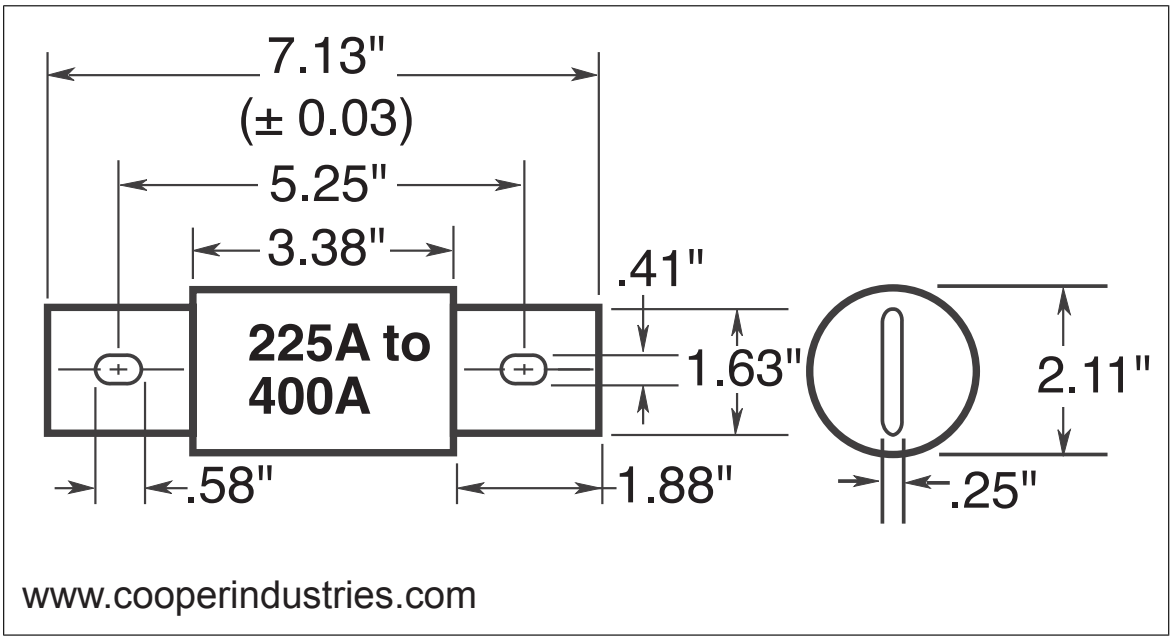

DFJ-500

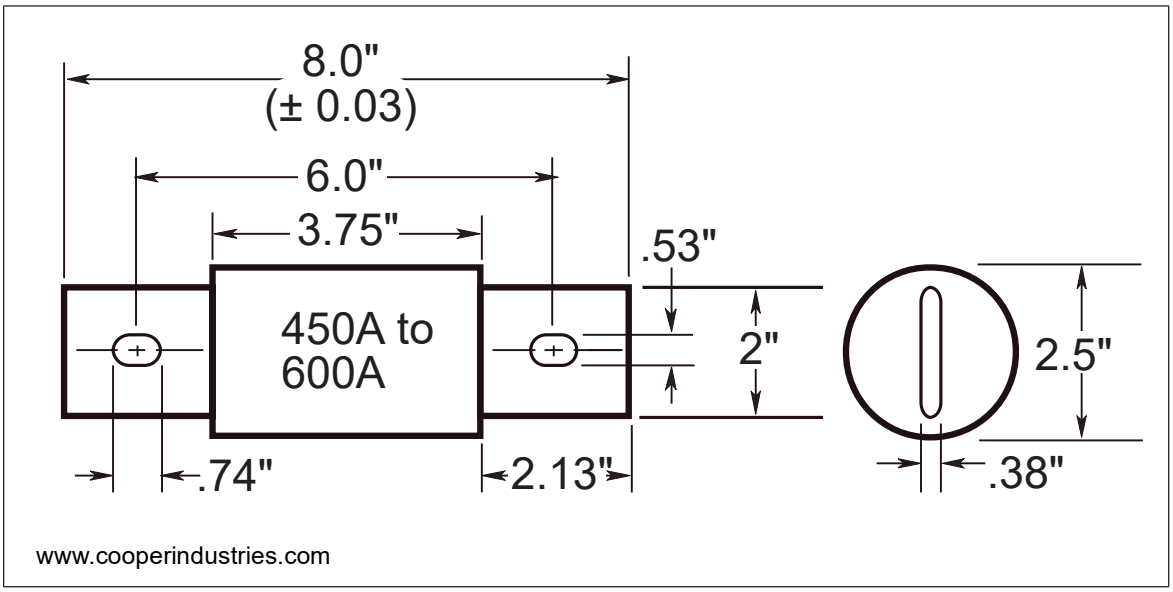

KTU-700

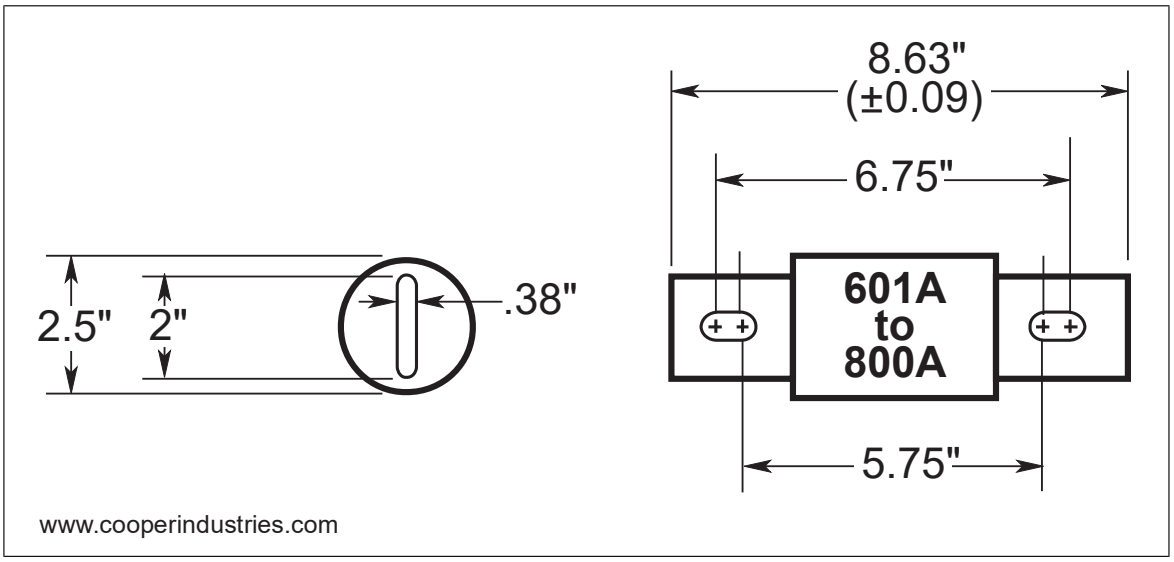

6,9 URD 33 TT F 1100 and 6,9 URD 73 TT F 1600

6,9 URD 33 TT F 1100, 6,9 URD 73 TT F 1600

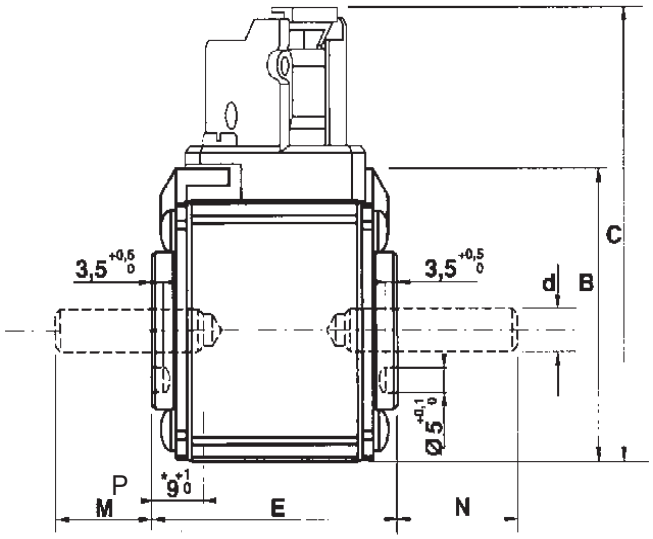

	33	73
A	74.5 mm 2-15/16 in	74.5 mm 2-15/16 in
B	79.5 mm 3-1/8 in	79.5 mm 3-1/8 in
C	114 mm 4-1/2 in	114 mm 4-1/2 in
D	46 mm 1-13/16 in	52 mm 2-1/16 in
M±	24	24
N±	39	39
E±1	50.6 2 in	74 2-29/32 in
d	M12	M12
G±0.1	15 19/32 in	15 19/32 in
P	9 23/64 in	9 23/64 in

www.mersen.com

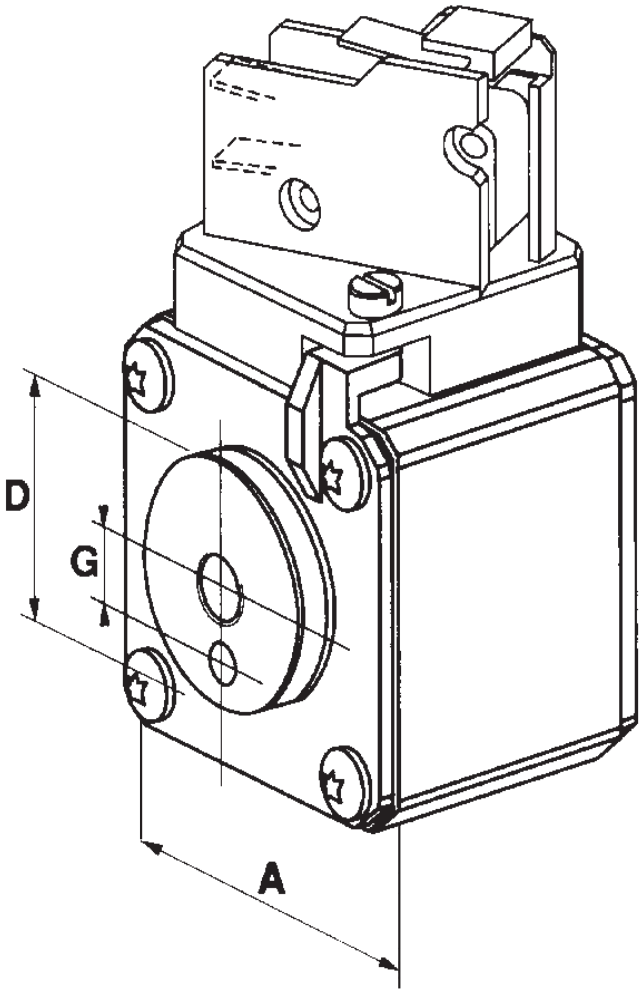

ZCU-14 control unit

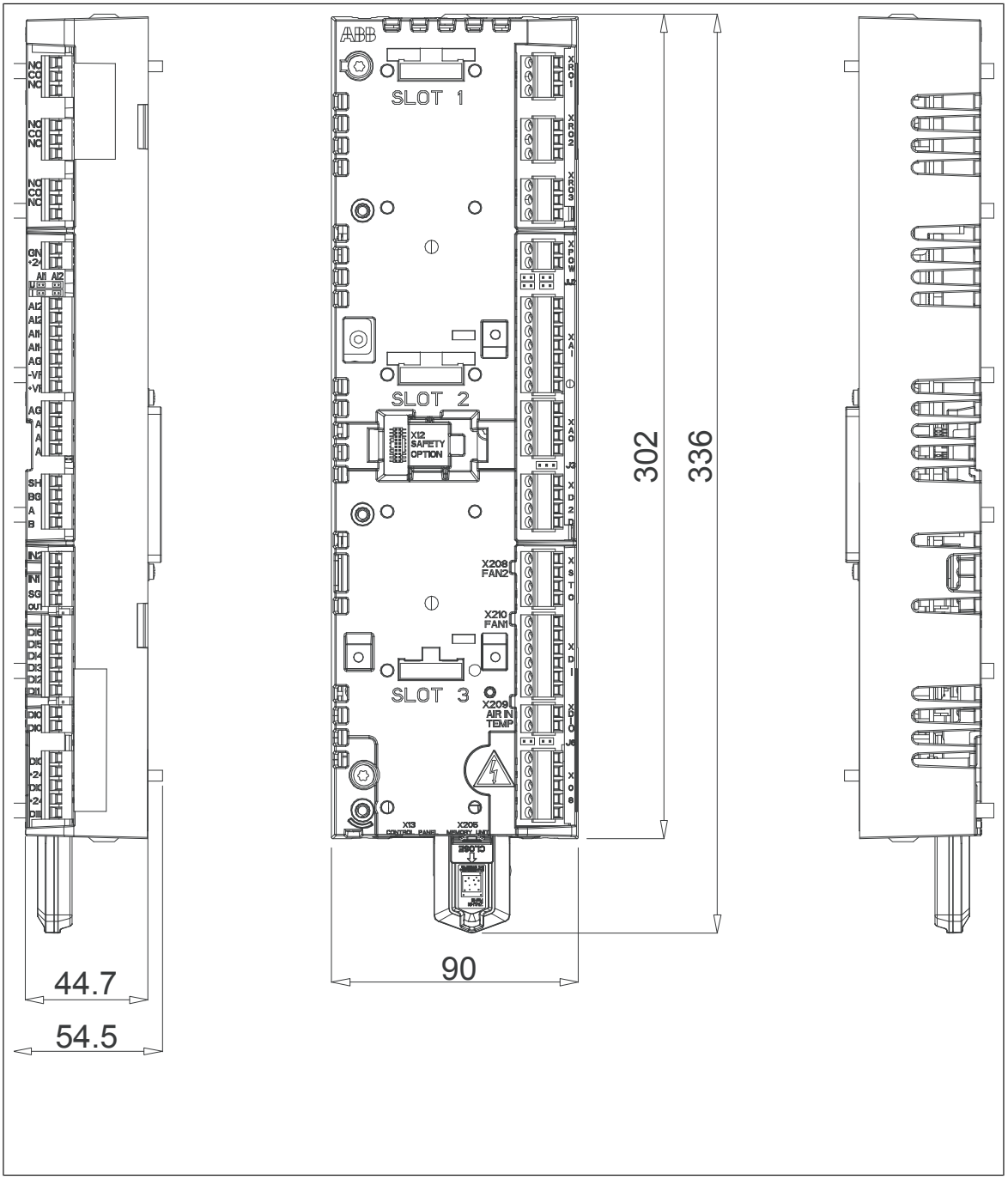

Dimensions in mm

1 mm = 0.0394 in

Support plate for ZCU-14

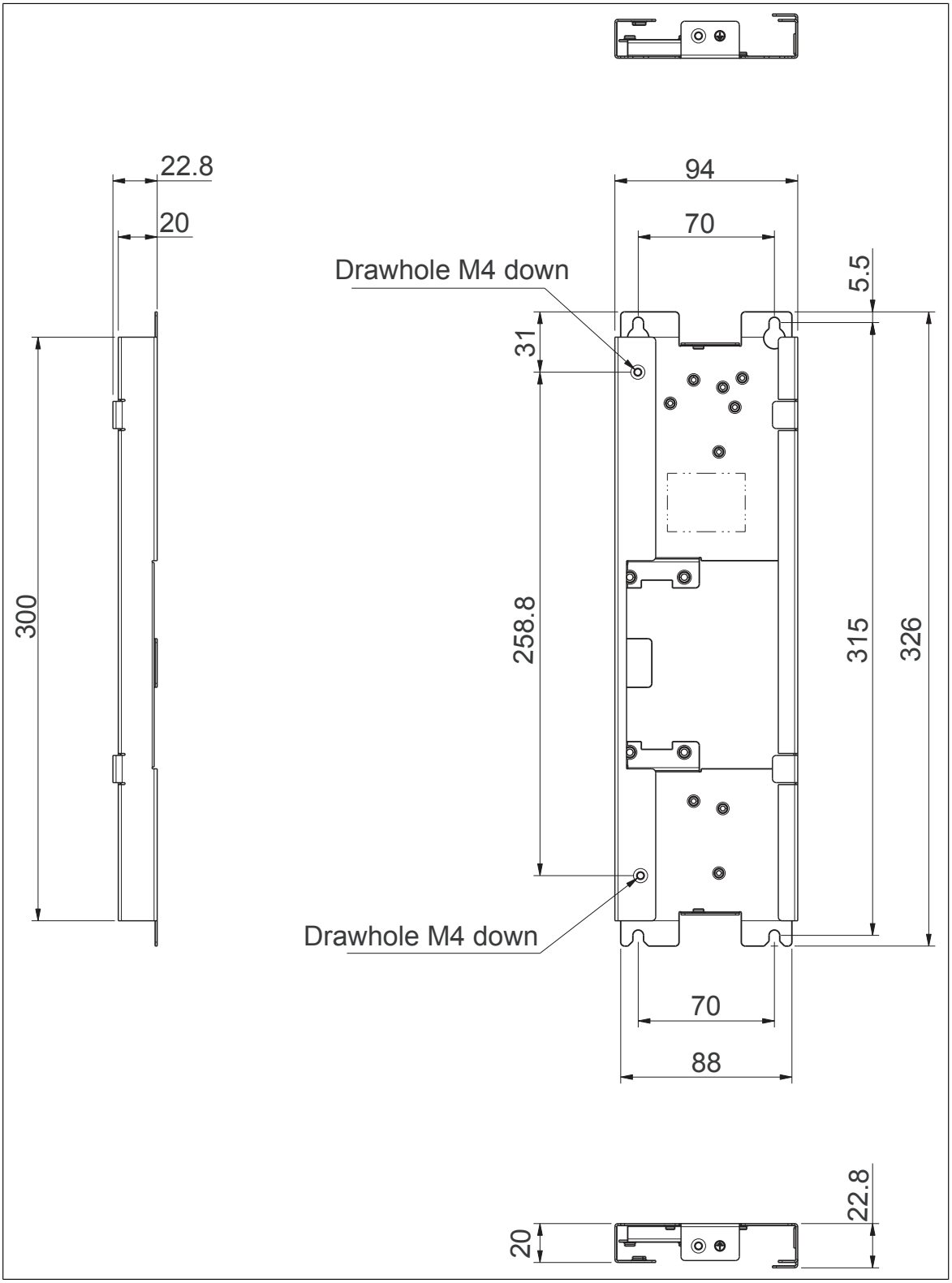

Dimensions in mm

1 mm = 0.0394 in

ACS-AP-x control panel with door mounting kit

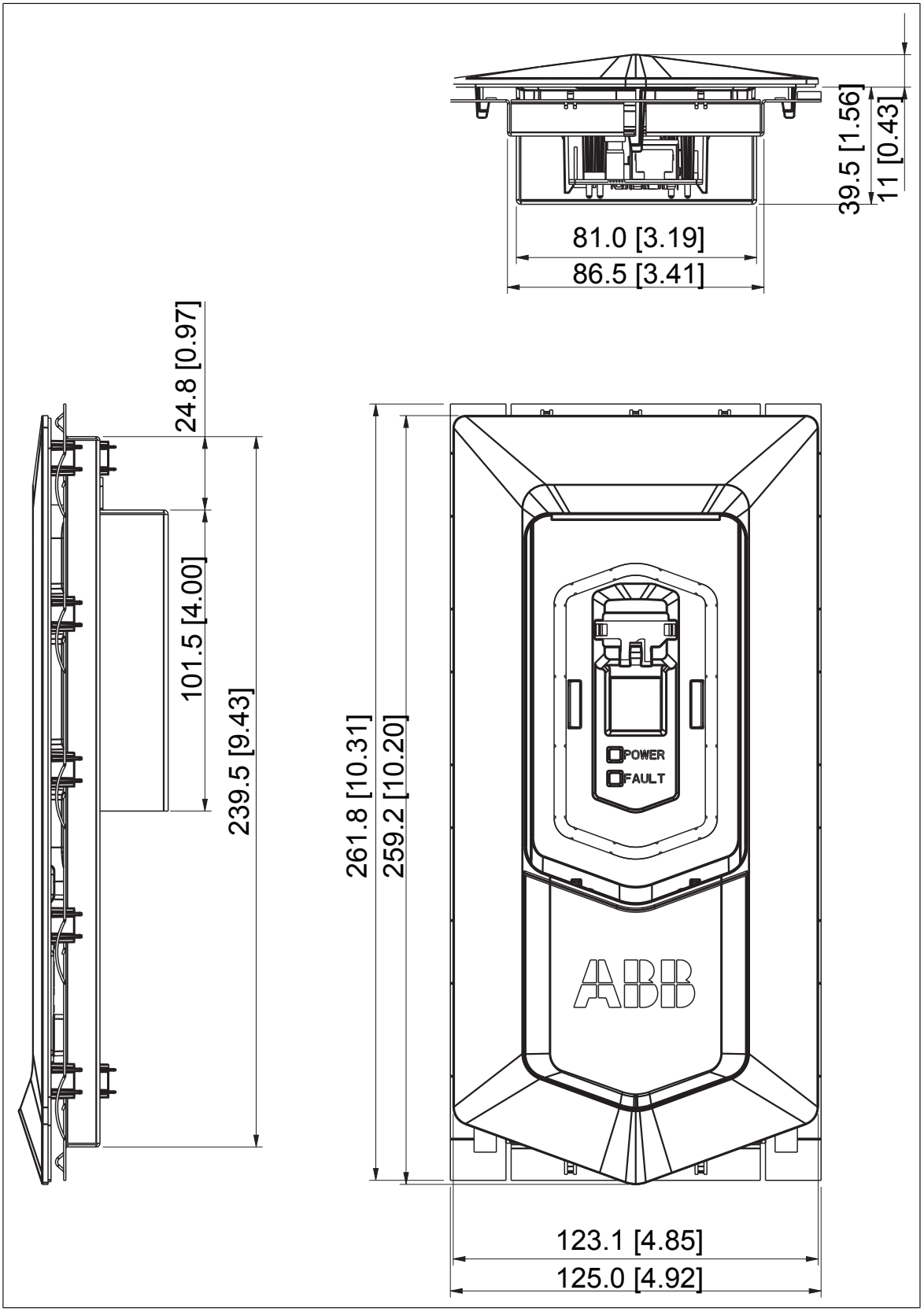

Cutting in the cabinet door: 109 × 223 mm (4.29 × 8.78 in)

Plate thickness: 1.5 … 2.5 mm (0.059 … 0.098 in)

Ramp

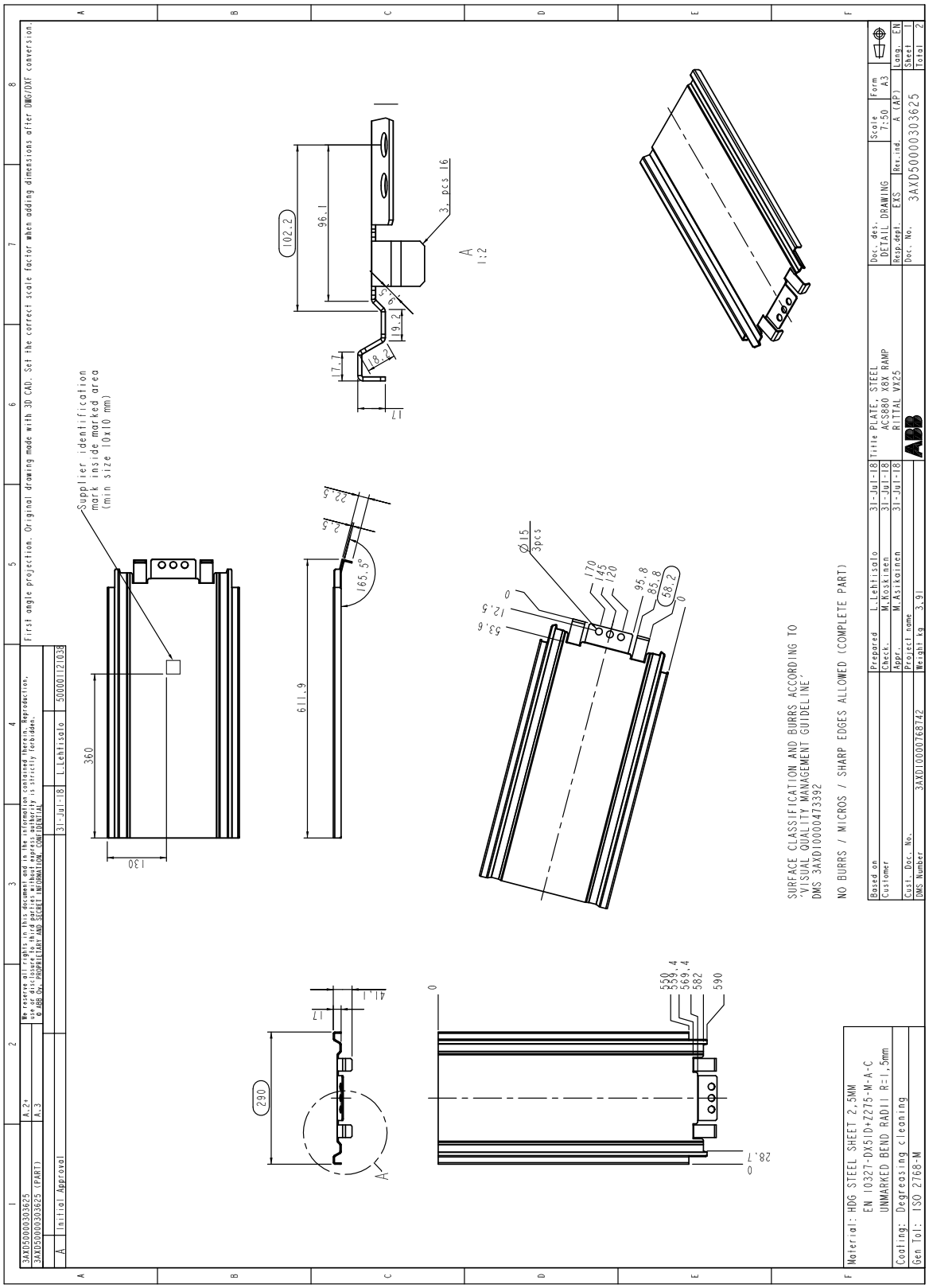
First angle projection. Original drawing made with 3D CAD. Set the correct scale factor when adding dimensions after DWG/DXF conversion.
Supplier identification mark inside marked area (min size 10x10 mm)
3. pcs 16
102.2
96.1
A 1:2
360
130
611.9
165.5°
22.5
2.5
Ø15 3pcs
170
145
120
95.8
85.8
58.2
53.6
12.5
290
41.1
17
550
559.4
569.4
582
590
28.7
SURFACE CLASSIFICATION AND BURRS ACCORDING TO
"VISUAL QUALITY MANAGEMENT GUIDELINE"
DMS 3AXD10000473392
NO BURRS / MICROS / SHARP EDGES ALLOWED (COMPLETE PART)
Material: HDG STEEL SHEET 2,5MM
EN 10327-DX51D+Z275-M-A-C
UNMARKED BEND RADII R=1,5mm
Coating: Degreasing cleaning
Gen Tol: ISO 2768-M
Title PLATE, STEEL
AC3860 X8X RAMP
RITTAL VA25
Prepared L.Lehtisalo 31-Jul-18
Check. M.Aloskinen 31-Jul-18
Appr. M.Asikoinen 31-Jul-18
Weight kg 3,91
Doc. des. DETAIL DRAWING
Scale 1:50
Form A3
Resp.dept. EXS
Rev.ind. A (AP)
Lang. EN
Doc. No. 3AXD50000303625
Sheet 1
Total 2
3AXD50000303625 A.2+
3AXD50000303625 (PART) A.3
A Initial Approval 31-Jul-18 L.Lehtisalo 50000112103A
We reserve all rights in this document and in the information contained therein. Reproduction, use or disclosure to third parties without express authority is strictly forbidden. © ABB Oy, PROPRIETARY AND SECRET INFORMATION, CONFIDENTIAL

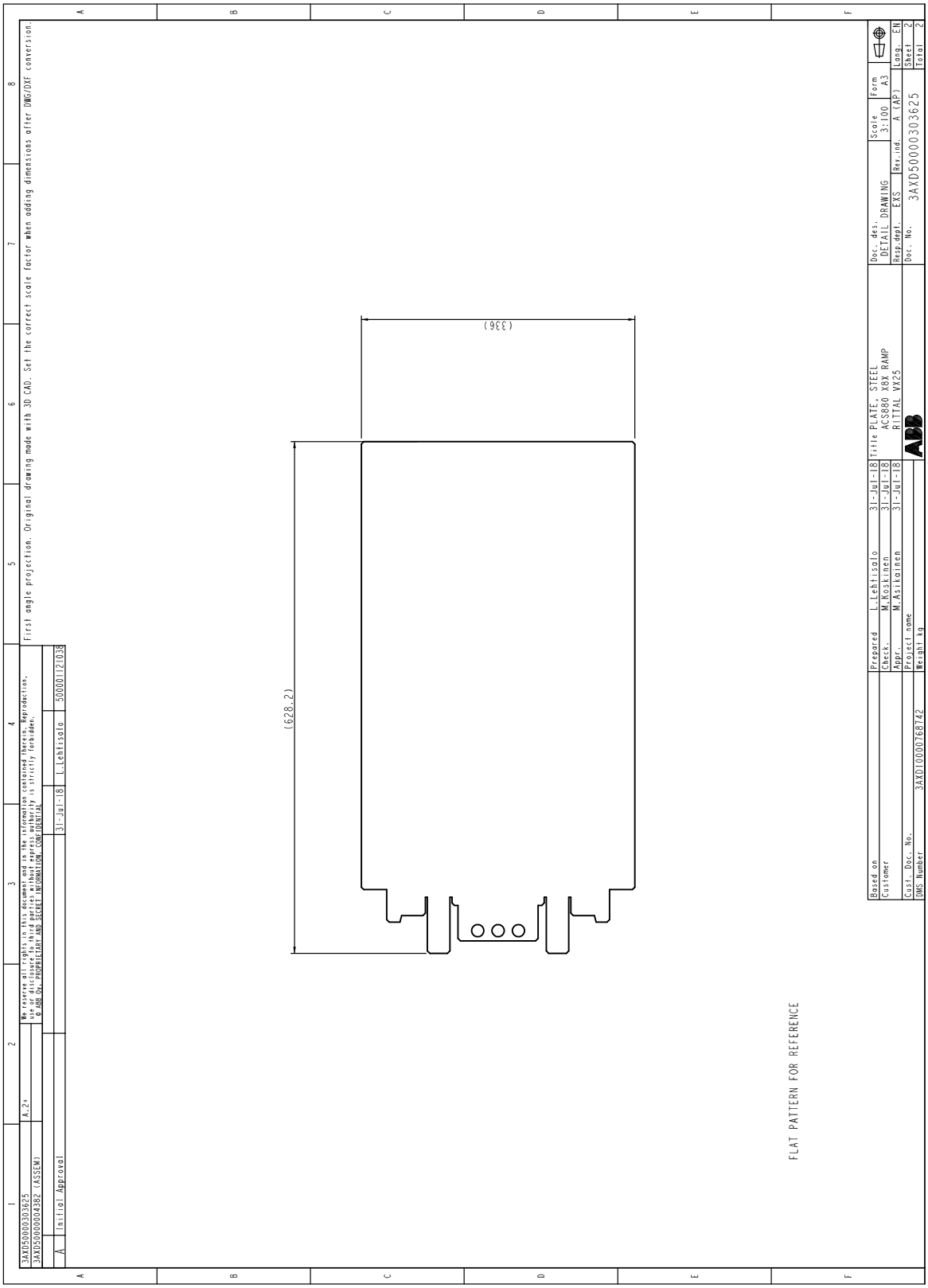
(336)
(628.2)
FLAT PATTERN FOR REFERENCE
3AXD50000303625
3AXD50000004382 (ASSEM)
A initial Approval
A.2+
We reserve all rights in this document and in the information contained therein. Reproduction, use or disclosure to third parties without express authority is strictly forbidden. © ABB Oy. PROPRIETARY AND SECRET INFORMATION CONTAINED HEREIN.
31-Jul-18
L.Lehtisalo
5000011210 38
First angle projection. Original drawing made with 3D CAD. Set the correct scale factor when adding dimensions after DWG/DXF conversion.
Based on
Customer
Cust. Doc. No.
DMS Number
3AXD10000768742
Prepared L.Lehtisalo 31-Jul-18
Check. M.Koskinen 31-Jul-18
Appr. M.Asikainen 31-Jul-18
Project name
Weight kg
Title PLATE, STEEL
ACS880 X8X RAMP
RITTAL VX25
ABB
Doc. des.
DETAIL DRAWING
Resp.dept. EKS
Doc. No. 3AXD50000303625
Scale 3:100
Rev.ind. A (AP)
Form A3
Lang. EN
Sheet 1
Total 2

D6D/D7D cabinet cooling fan

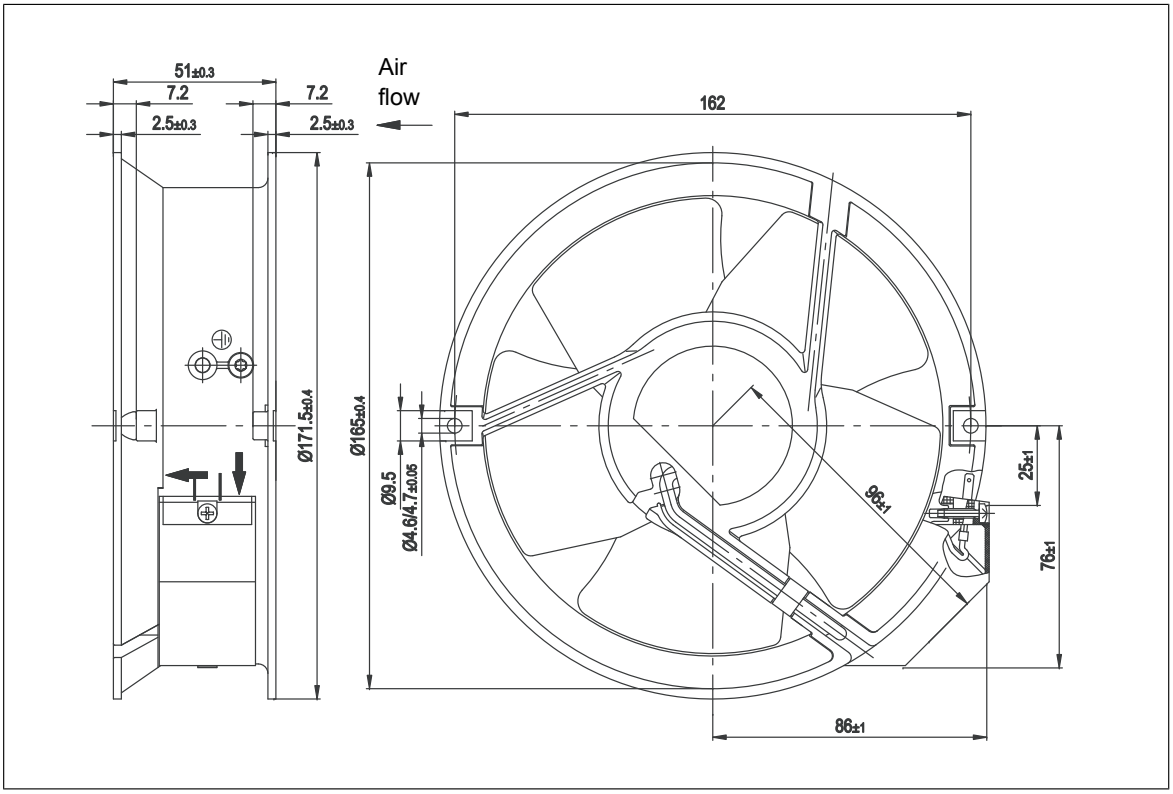

Dimensions in mm

1 mm = 0.0394 in

CVAR board

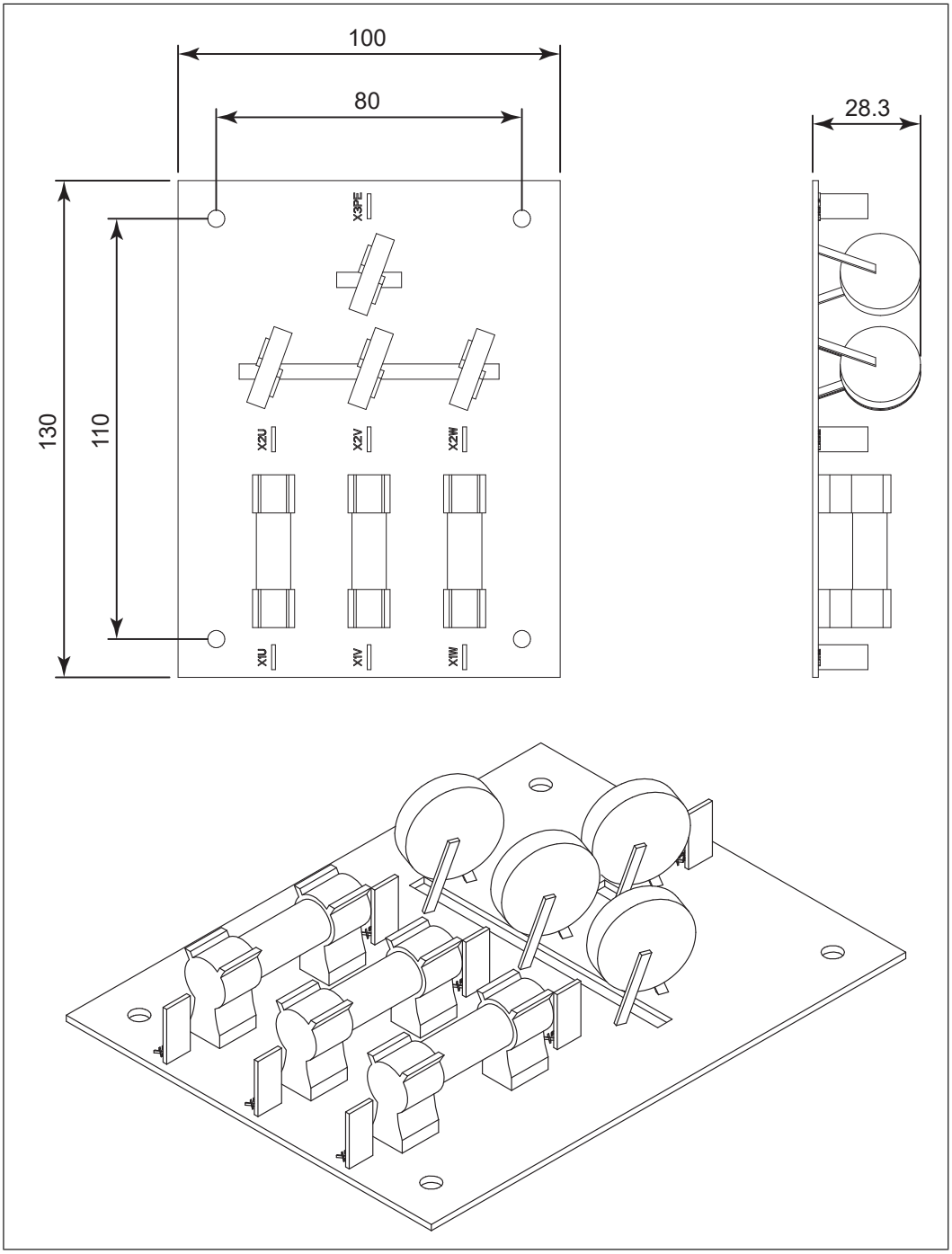

Dimensions in mm

1 mm = 0.0394 in

13. Example circuit diagrams

Contents of this chapter

This chapter contains example circuit diagrams of a diode supply unit.

Note: These diagrams do not necessarily match the installation-specific circuit diagrams of a tailor-made cabinet-installed unit.

The purpose of these diagrams is to help in:

- understanding the internal connections and operation of the cabinet-installed drive with a diode supply unit, and
- learning how to wire a (ACS880-304+A003+C188) diode supply module when installed in an user-defined cabinet.

Component designations used in the diagrams

D8D circuit diagrams

The D8D circuit diagrams include:

Designation	Component
A1	CVAR board for UL installations only
A58	DDPI board, included in a DPMP-01 panel mounting platform kit (to be ordered separately)
A59	ACS-AP-W control panel
A51	ZCU-14 control unit with ZCON-14 control board
F1.x	AC fuses for protecting the input cable and module
G24	Incoming cubicle fan for cooling the AC fuses
Q1	Main switch-disconnector
Q2	Main contactor
Q21	Auxiliary voltage switch with fuses
S21	Operating switch
T01	D8D diode supply module (ACS880-304-0650A-5+A003+C188)
T21	Auxiliary voltage transformer (for example, power supply for the DSU module cooling)

The D8D circuit diagrams also include:

- an example of auxiliary voltage distribution
- an emergency stop circuit (stop category 0) without opening the main contactor.

Differences of the DSU DxD circuit diagrams

The D6D/D7D main supply diagram has a main switch fuse [Q1] and a cabinet fan [G24], whereas D8D has a main switch-disconnector [Q1] and incoming cubicle fan [G24].

The auxiliary voltage distribution diagram of D6D has the main contactor [Q2] coil without PLC, whereas D7D and D8D have the main contactor [Q2] coil with PLC, but it is not in use to ensure decoupling between the main and control circuits.

The ZCU-14 control unit diagrams of D6D/D7D/D8D have the same connection configuration. In addition to this, D8D has an emergency stop circuit (CAT 0 without opening the main contactor).

Frames D6D and D7D – Main supply, auxiliary voltage transformer, DSU module (sheet 001)

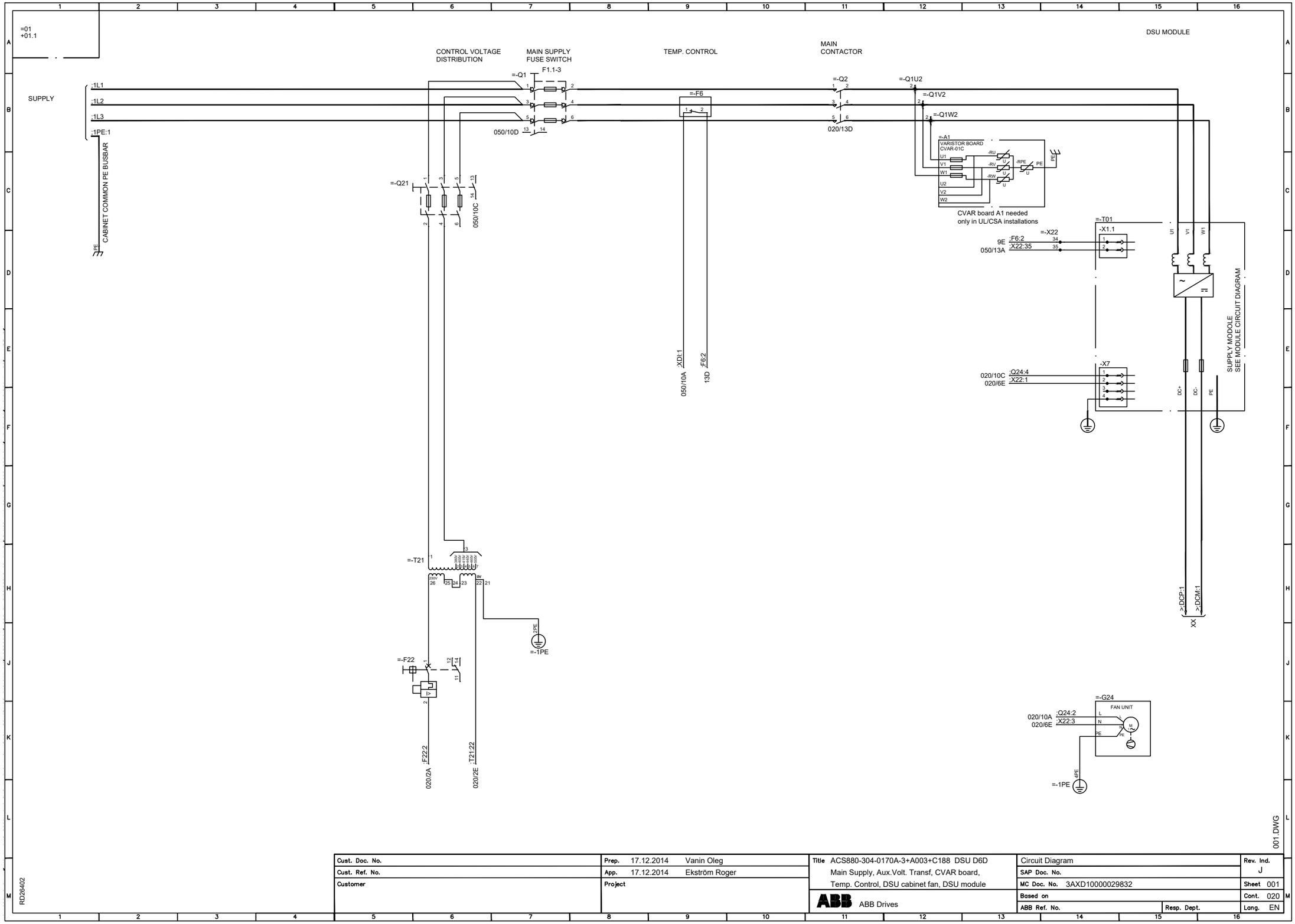

Cust. Doc. No.	Prep. 17.12.2014 Vanin Oleg	Title ACS880-304-0170A-3+A003+C188 DSU D6D Main Supply, Aux.Volt. Transf, CVAR board, Temp. Control, DSU cabinet fan, DSU module	Circuit Diagram
Cust. Ref. No.	App. 17.12.2014 Ekström Roger		SAP Doc. No.
Customer	Project	ABB Drives	MC Doc. No. 3AXD10000029832
			Based on
			ABB Ref. No. / Resp. Dept.

Rev. Ind.	J
Sheet	001
Cont.	020
Lang.	EN

Frame D6D – Auxiliary voltage distribution (sheet 020)

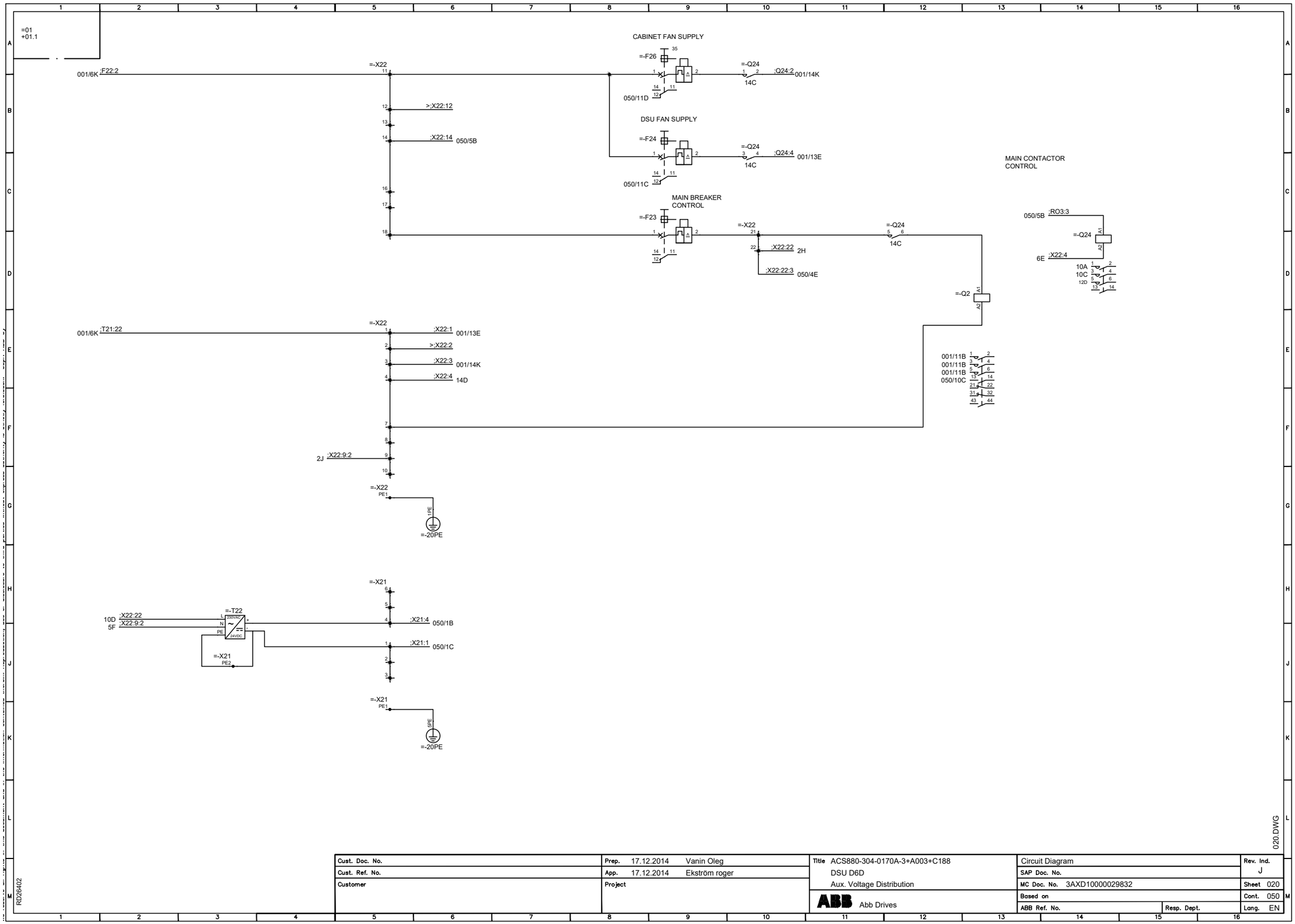

Cust. Doc. No.	Prep. 17.12.2014 Vanin Oleg	Title ACS880-304-0170A-3+A003+C188 DSU D6D Aux. Voltage Distribution	Circuit Diagram	Rev. Ind. J
Cust. Ref. No.	App. 17.12.2014 Ekström roger		SAP Doc. No.	Sheet 020
Customer	Project	ABB Abb Drives	MC Doc. No. 3AXD10000029832	Cont. 050
			Based on	Lang. EN
			ABB Ref. No. / Resp. Dept.	

Frames D7D – Auxiliary voltage distribution (sheet 020)

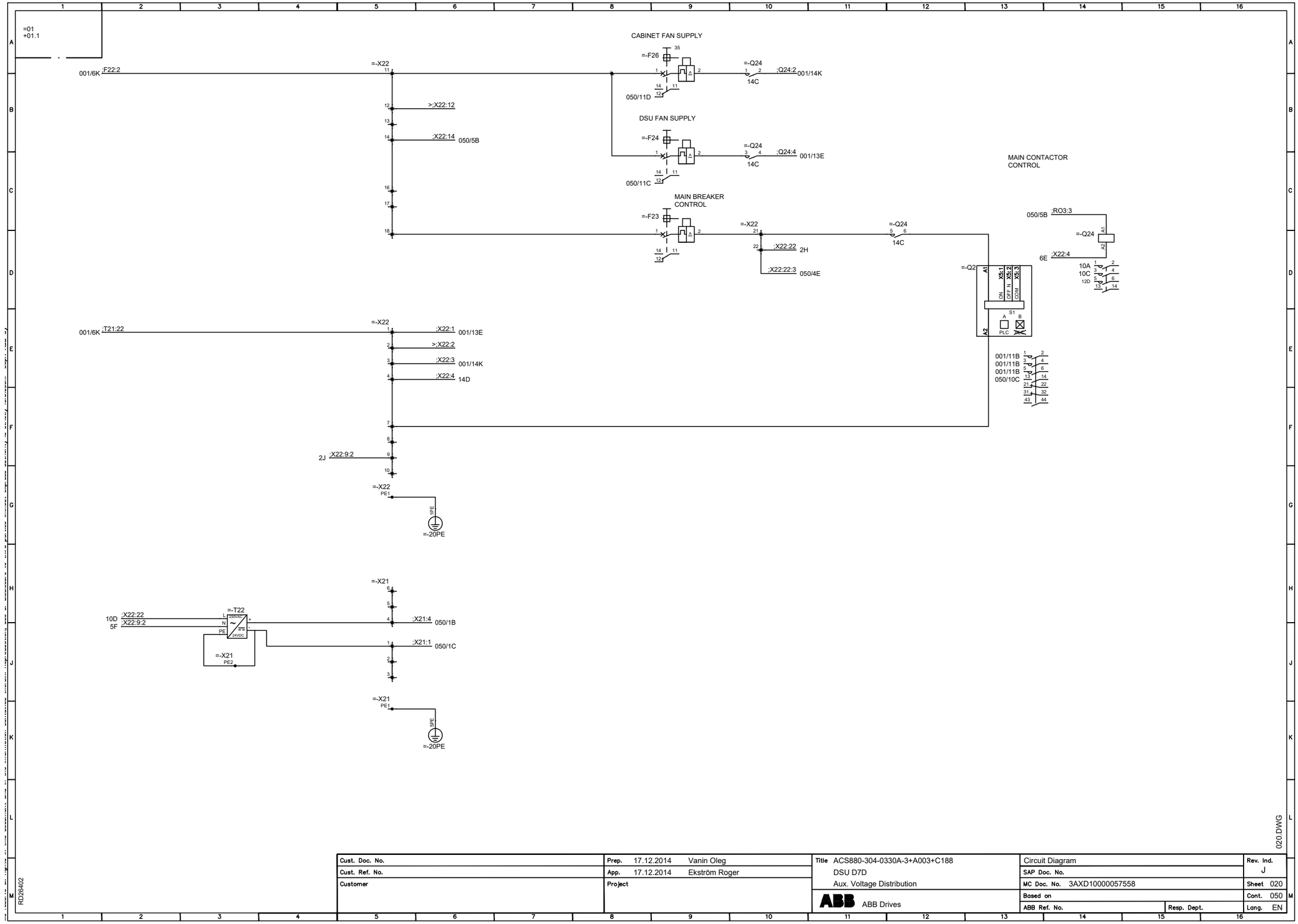

Cust. Doc. No.	Prep. 17.12.2014 Vanin Oleg	Title ACS880-304-0330A-3+A003+C188	Circuit Diagram	Rev. Ind. J
Cust. Ref. No.	App. 17.12.2014 Ekström Roger	DSU D7D	SAP Doc. No.	
Customer	Project	Aux. Voltage Distribution	MC Doc. No. 3AXD10000057558	Sheet 020
		ABB Drives	Based on	Cont. 050
			ABB Ref. No. / Resp. Dept.	Lang. EN

Frames D6D and D7D – ZCU-14 control unit, control panel (sheet 050)

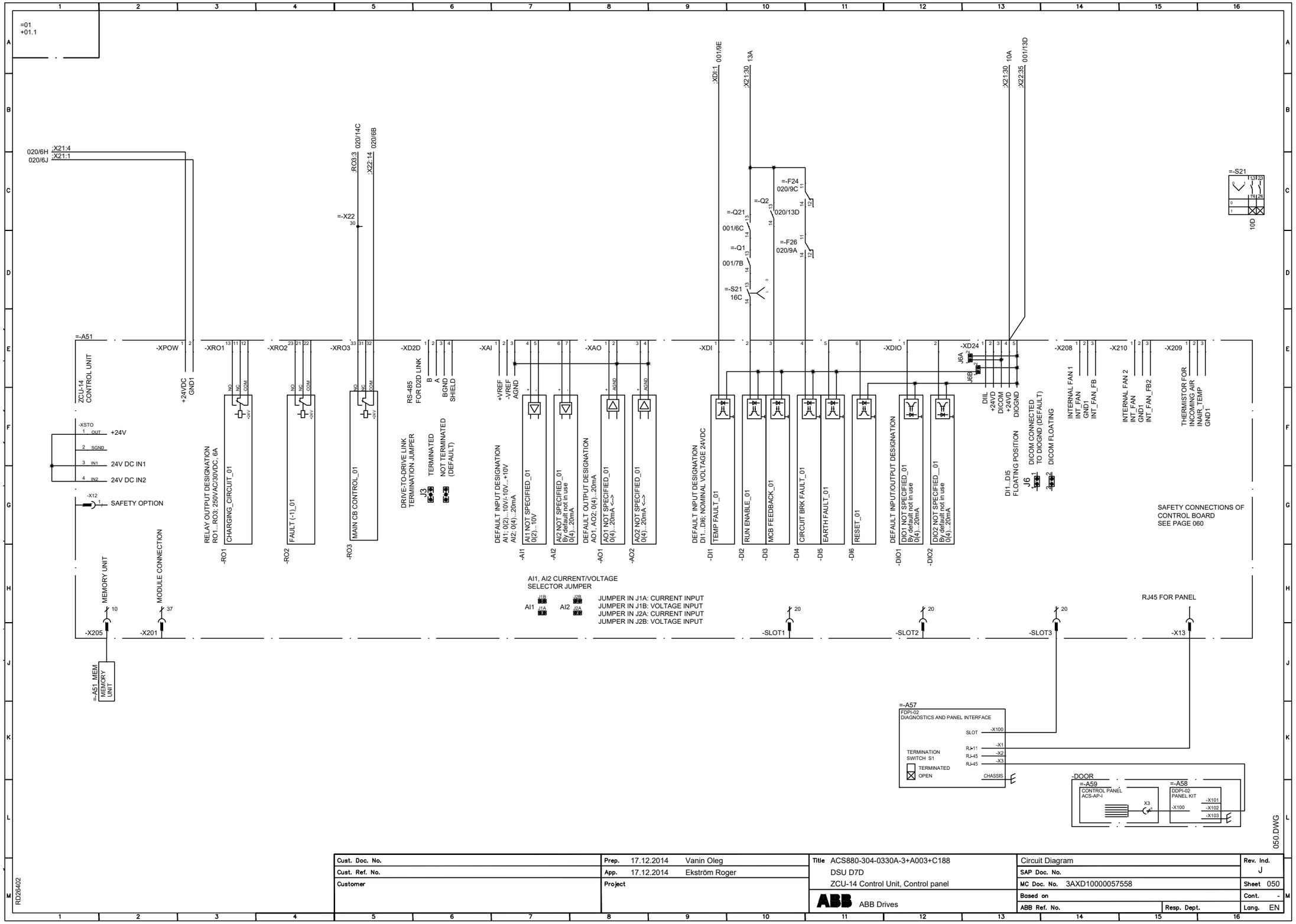

Cust. Doc. No.	Prep. 17.12.2014 Vanin Oleg	Title ACS880-304-0330A-3+A003+C188	Circuit Diagram
Cust. Ref. No.	App. 17.12.2014 Ekström Roger	DSU D7D	SAP Doc. No.
Customer	Project	ZCU-14 Control Unit, Control panel	MC Doc. No. 3AXD10000057558
		ABB Drives	Based on
			ABB Ref. No. / Resp. Dept.

Rev. Ind. J
Sheet 050
Cont. -
Lang. EN

Frame D8D – Main supply, auxiliary voltage transformer, DSU module (sheet 001)

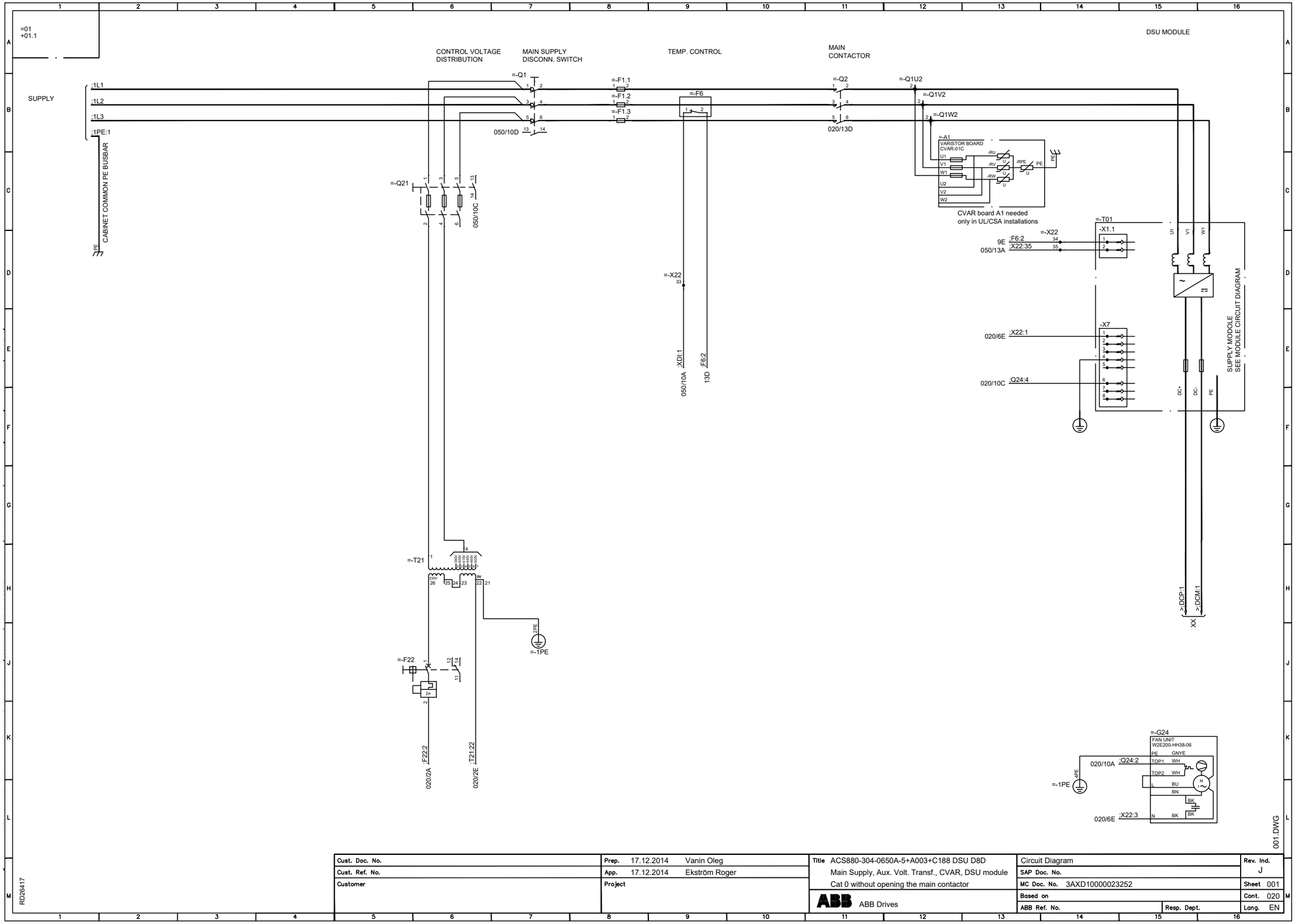

Frame D8D – Auxiliary voltage distribution (sheet 020)

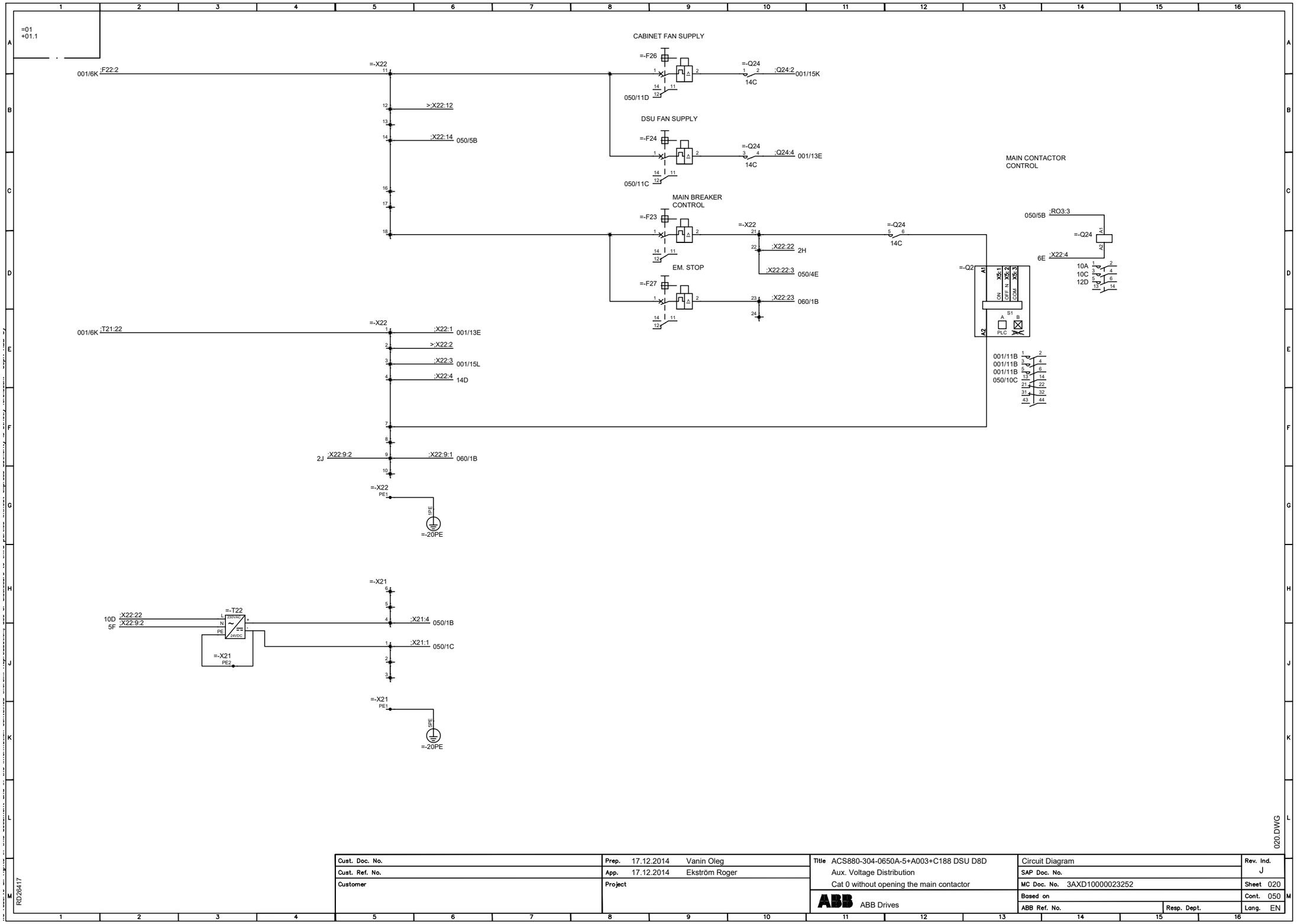

Frame D8D – ZCU-14 control unit, control panel (sheet 050)

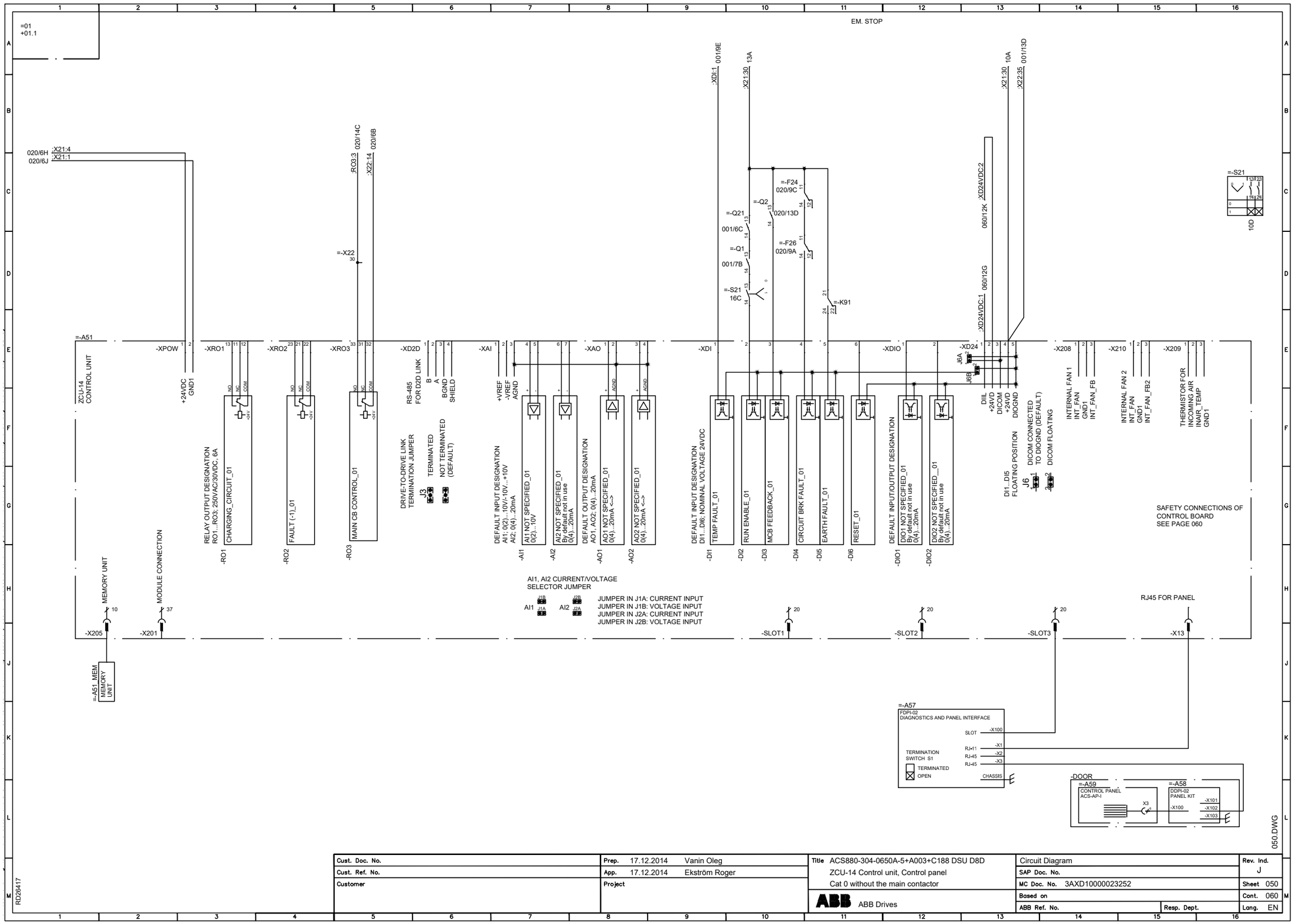

Frame D8D – Emergency stop safety circuit (sheet 060)

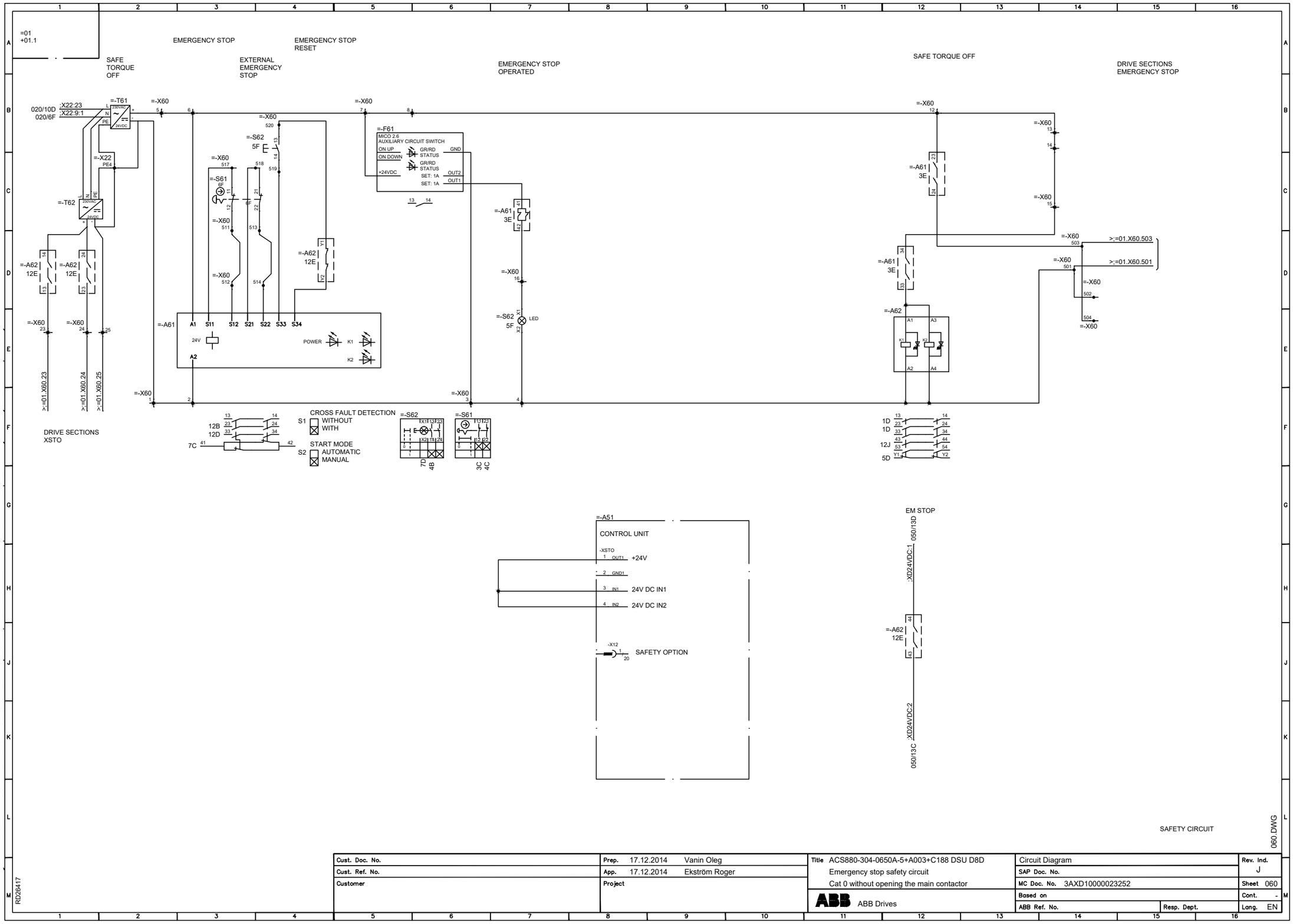

Further information

Product and service inquiries

Address any inquiries about the product to your local ABB representative, quoting the type designation and serial number of the unit in question. A listing of ABB sales, support and service contacts can be found by navigating to www.abb.com/searchchannels.

Product training

For information on ABB product training, navigate to new.abb.com/service/training.

Providing feedback on ABB manuals

Your comments on our manuals are welcome. Navigate to new.abb.com/drives/manuals-feedback-form.

Document library on the Internet

You can find manuals and other product documents in PDF format on the Internet at www.abb.com/drives/documents.

a3 (frozen)
PDF-A4
Created 2020-03-18, 11:37:28

www.abb.com/drives

3AUA0000102452G

© 2020 ABB. All rights reserved.
Specifications subject to change without notice.

3AUA0000102452 Rev G (EN) EFFECTIVE 2020-03-18