ABB INDUSTRIAL DRIVES

ACS800-11 drives (5.5 to 110 kW)
ACS800-U11 drives (7.5 to 125 hp)

Hardware manual

List of related manuals

Drive hardware manuals and guides	**Code (English)**
ACS800-11/U11 Drives Hardware Manual (5.5 to 110 kW, 7.5 to 125 hp)	*3AFE68367883*
Drive firmware manuals and guides	
ACS800 Standard Control Program 7.x Firmware Manual and	3AFE64527592
Adaptive Program Application Guide	3AFE64527274
ACS800 IGBT Supply Control Program Firmware Manual	3AFE68315735
ACS800 System Control Program 7.x Firmware Manual and	3AFE64670646
Adaptive Program Application Guide	3AFE68420075
ACS800 Permanent Magnet Synchronous Machine Control Program Supplement to Firmware Manual for System Control Program	3AFE64492641
ACS800 Permanent Magnet Synchronous Machine Drive Application Program Supplement to Firmware Manual for ACS800 Standard Control Program 7.x	3AFE68437890
ACS800 Crane Control Program Firmware Manual	3AFE68775230
ACS800 Master/Follower Application Guide	3AFE64590430
ACS800 Pump Control Application Program 7.2 Firmware Manual	3AFE68478952
ACS800 Extruder Control Program Supplement	3AFE64648543
ACS800 Centrifuge Control Program Supplement	3AFE64667246
ACS800 Traverse Control Program Supplement	3AFE64618334
ACS800 Winch Control Program (+N698) Firmware Manual	3AUA0000031177
ACS800 Rod Pump Light Control Program Firmware Manual	3AUA0000005304
Option manuals and guides	
ACS800-01/04/11/31/104/104LC Safe torque off function (+Q967), Application guide	3AUA0000063373
RDCO-01/02/03 DDCS Communication Option Modules	3AFE64492209
AIMA-01 I/O Module Adapter User's Manual	3AFE64661442
NBRA-6xx Braking Choppers Installation and Start-up Guide	3AFY58920541
ACS800 Vibration Damper Installation Guide	3AFE68295351
Manuals and quick guides for I/O extension modules, fieldbus adapter, and so on.	

You can find manuals and other product documents in PDF format on the Internet. See Document library on the Internet on the inside of the back cover. For manuals not available in the Document library, contact your local ABB representative.

The code below opens an online listing of the manuals applicable to the product:

ACS800-11/U11 manuals

ACS800-11 drives (5.5 to 110 kW)
ACS800-U11 drives (7.5 to 125 hp)

Hardware manual

Table of contents

1. Safety instructions

4. Mechanical installation

6. Electrical installation

11. Start-up and use

3AFE68367883 Rev D
EN
EFFECTIVE: 2023-12-01

© 2023 ABB. All Rights Reserved.

Table of contents

1. Safety instructions

What this chapter contains . . . 11
Use of warnings and notes . . . 11
Installation and maintenance work . . . 12
Grounding . . . 13
Mechanical installation and maintenance . . . 14
Printed circuit boards . . . 14
Fiber-optic cables . . . 14
Operation . . . 15
Permanent magnet motor . . . 16
Installation and maintenance work . . . 16
Start-up and operation . . . 16

2. Introduction to this manual

What this chapter contains . . . 17
Intended audience . . . 17
Categorization according to the frame size . . . 17
Categorization according to the plus code . . . 18
Contents . . . 18
Installation and commissioning flowchart . . . 19
Terms and abbreviations . . . 21

3. Operation principle and hardware description

What this chapter contains . . . 23
Product overview . . . 24
Terms . . . 27
Operation principle . . . 27
Line-side converter . . . 27
AC voltage and current waveforms . . . 28
Motor control . . . 28
Printed circuit boards . . . 29
DDCS communication modules . . . 29
Main circuit and control diagram . . . 30
Fieldbus control interface . . . 31
Control block diagram . . . 31
Connection diagram of the RMIO board in the line-side converter . . . 32
Type code . . . 33

4. Mechanical installation

What this chapter contains . . . 35
Unpacking the unit . . . 35
Checking the delivery . . . 36
Moving the unit . . . 37
Before installation . . . 38
Requirements for the installation site . . . 38

Wall . . . 38
Floor . . . 38
Free space around the unit . . . 39
Mounting the drive on the wall . . . 39
Units without vibration dampers . . . 39
Units with vibration dampers . . . 39
Cabinet installation . . . 40
Preventing cooling air recirculation . . . 40
Unit above another . . . 41
Installing cabinet duct plates (optional) . . . 41
Installation kits . . . 41
Before you start . . . 42
Installation . . . 42
Assembly drawing for cabinet duct plates . . . 43

5. Planning the electrical installation

What this chapter contains . . . 45
Motor selection and compatibility . . . 46
Protecting the motor insulation and bearings . . . 47
Requirements table . . . 48
Permanent magnet motor . . . 53
Supply connection . . . 53
Disconnecting device (disconnecting means) . . . 53
EU . . . 53
US . . . 53
Fuses . . . 53
Thermal overload and short-circuit protection . . . 53
Thermal overload protection . . . 53
Protecting the motor against overload without the thermal model or temperature sensors . . . 54
Protecting the motor and motor cable in short circuits . . . 54
Short-circuit protection . . . 55
Ground fault protection . . . 55
Emergency stop devices . . . 55
Prevention of unexpected start-up (option +Q950) . . . 56
Safe torque off (option +Q967) . . . 57
Safe torque off circuit diagram . . . 58
Selecting the power cables . . . 59
Alternative power cable types . . . 60
Motor cable shield . . . 60
Additional US requirements . . . 61
Conduit . . . 61
Armored cable / shielded power cable . . . 61
Power factor compensation capacitors . . . 62
Equipment connected to the motor cable . . . 62
Installation of safety switches, contactors, connection boxes, etc. . . . 62
Bypass connection . . . 62
Using a contactor between the drive and the motor . . . 63
Protecting the relay output contacts and attenuating disturbances in case of inductive loads . . . 64
Selecting the control cables . . . 65
Relay cable . . . 65
Control panel cable . . . 65

Connection of a motor temperature sensor to the drive I/O 66
Installation sites above 2000 m (6562 ft) 66
Routing the cables 67
Control cable ducts 67

6. Electrical installation

What this chapter contains 69
Checking the insulation of the installation 69
Drive 69
Supply cable 69
Motor and motor cable 70
IT (ungrounded) systems 70
Disconnecting the EMC filter capacitors 70
Units of frame size R5 70
Units of frame size R6 71
Connecting the power cables 72
Diagram 72
Conductor stripping lengths 73
Allowed wire sizes, tightening torques 73
Wall installed units (European version) 73
Power cable installation procedure 73
Wall installed units (US version) 76
Warning sticker 77
Cabinet installed units (IP00, UL type open) 77
Connecting the control cables 78
Terminals 78
360-degree grounding 79
Connecting the shield wires 79
Cabling of I/O and fieldbus modules 80
Pulse encoder module cabling 80
Attaching the control cables and covers 81
Installation of optional modules and PC 81
Connecting a PC to the motor-side RMIO board 82

7. Installation of the AGPS board (Prevention of unexpected start-up, +Q950)

What this chapter contains 83
Prevention of unexpected start-up (+Q950) 83
Installation of the AGPS board 83
Circuit diagram 86
Start-up and validation 86
Use 87
Maintenance 87
Dimensional drawing 87

8. Installation of the ASTO board (Safe torque off, +Q967)

What this chapter contains 89
Safe torque off (+Q967) 89
Installation of the ASTO board 89
Circuit diagram 92
Validation and start-up 92
Dimensional drawing 92

9. Motor control and I/O board (RMIO)

What this chapter contains . . . 93
Note on terminal labelling . . . 93
Note on external power supply . . . 93
Parameter settings . . . 94
External control connections (non-US) . . . 95
External control connections (US) . . . 96
RMIO board specifications . . . 97
Analogue inputs . . . 97
Constant voltage output . . . 97
Auxiliary power output . . . 97
Analogue outputs . . . 97
Digital inputs . . . 97
Relay outputs . . . 98
DDCS fiber-optic link . . . 98
24 VDC power input . . . 98

10. Installation checklist

What this chapter contains . . . 101
Checklist . . . 101

11. Start-up and use

What this chapter contains . . . 103
Start-up and use . . . 103
Control panel . . . 104
To control the line-side converter . . . 104
To control the motor-side converter . . . 105
Removing the control panel . . . 105

12. Actual signals and parameters

What this chapter contains . . . 107
Line-side converter actual signals and parameters in the motor-side converter control program . . . 107
Terms and abbreviations . . . 107
Actual signals . . . 108
09 ACTUAL SIGNALS . . . 108
Parameters . . . 108
95 HARDWARE SPECIF . . . 108
ACS800-11/U11 specific parameters in the IGBT Supply Control Program . . . 109
Terms and abbreviations . . . 109
Parameters . . . 109
16 SYSTEM CTR INPUTS . . . 109
31 AUTOMATIC RESET . . . 110
Fixed parameters with the ACS800-11 and ACS800-U11 . . . 111

13. Maintenance

What this chapter contains . . . 113
Safety . . . 113
Maintenance intervals . . . 113

Heatsink . . . 114
Main cooling fan . . . 114
Fan replacement (R5, R6) . . . 115
Additional fan . . . 115
Replacement (R5) . . . 115
Replacement (R6) . . . 115
Capacitors . . . 116
Reforming . . . 116

14. Fault tracing

What this chapter contains . . . 117
Faults and warnings displayed by the CDP 312R control panel . . . 117
Conflicting ID numbers . . . 118
LEDs . . . 118

15. Technical data

What this chapter contains . . . 119
IEC data . . . 119
Ratings . . . 119
Symbols . . . 120
Sizing . . . 120
Derating . . . 121
Temperature derating . . . 121
Altitude derating . . . 121
Mains cable fuses . . . 122
Cable types . . . 124
Cable entries . . . 124
Dimensions, weights and noise . . . 124
NEMA data . . . 125
Ratings . . . 125
Symbols . . . 125
Input cable fuses . . . 126
Cable types . . . 127
Cable Entries . . . 127
Dimensions and weights . . . 127
Input power connection . . . 128
Motor connection . . . 128
Efficiency . . . 128
Energy efficiency data (ecodesign) . . . 129
Cooling . . . 129
Degree of protection . . . 129
AGPS-11C (option +Q950) . . . 129
ASTO-11C (option +Q967) . . . 129
Ambient conditions . . . 130
Materials . . . 130
CE marking . . . 132
Compliance with the European Low Voltage Directive . . . 132
Compliance with the European EMC Directive . . . 132
Compliance with the European Machinery Directive . . . 132
Applicable standards . . . 132
Compliance with EN 61800-3:2004 . . . 133
Definitions . . . 133

First environment (drive of category C2) 133
Second environment (drive of category C3) 134
Second environment (drive of category C4) 134
“C-tick” marking 135
UL/CSA markings 135
UL checklist 135
Disclaimer 135
Cybersecurity disclaimer 135

16. Dimensional drawings

Frame size R5 (IP21, UL type 1) 138
Frame size R6 (IP21, UL type 1) 139
Cabinet duct plates (optional), frame size R5 140
Cabinet duct plates (optional), frame size R6 141
Package (frame size R5) 142
Package (frame size R6) 142
AGPS board with enclosure (optional) 143
ASTO board with enclosure (optional) 144

17. External +24 V power supply for the RMIO boards via terminal X34

What this chapter contains 145
Parameter settings 145
Connecting +24 V external power supply 146
RMIO board of the motor-side converter 146
RMIO board of the line-side converter 148
Frame size R5 148
Frame size R6 149

Further information

1

Safety instructions

What this chapter contains

This chapter contains the safety instructions that you must obey when you install, operate and service the drive. If you ignore them, physical injury or death may occur, or damage may occur to the drive, motor or driven equipment.

Read the safety instructions before you do work on the unit.

Use of warnings and notes

Warnings tell you about conditions that can cause serious injury or death or damage to the equipment. They also tell you how to avoid the danger.

Notes tell you about particular conditions or facts, or give additional information. The warning symbols in this document:

Dangerous voltage warning warns of high voltage which can cause physical injury and/or damage to the equipment.

General warning warns about conditions, other than those caused by electricity, which can result in physical injury and/or damage to the equipment.

Electrostatic discharge warning warns of electrostatic discharge which can damage the equipment.

Hot surface warning warns of hot surfaces which can cause physical injury.

Installation and maintenance work

These warnings are intended for all person that do work on the drive, motor cable or motor.

WARNING! If you ignore these safety instructions, physical injury or death, or damage to the equipment can occur:

- Only qualified electricians are allowed to install and maintain the drive.
- Do not do work on the drive, motor cable or motor when input power is connected. After you disconnect the input power, wait for 5 minutes to let the intermediate circuit capacitors discharge before you do work on the drive, motor or motor cable.
  Use a multimeter with a minimum impedance of 1 Mohm to measure that:
  1. The voltage between input phases U1, V1 and W1 and the frame is close to 0 V.
  2. The voltage between terminals UDC+ and UDC- and the frame is close to 0 V.
- Do not do work on the control cables when the power is applied to the drive or to the external control circuits. Externally-supplied control circuits can cause dangerous voltages inside the drive even when the main power of the drive is off.
- Do not do insulation or voltage withstand tests on the drive or drive modules.
- When you connect the motor cable, make sure that the phase order is correct.
- After you maintain or modify a drive safety circuit, or change circuit boards in the module, test the operation of the safety circuit according to the start-up instructions.
- Do not change the electrical installation of the drive except for the essential control and power connections. Such changes can affect the safety or operation of the drive. All customer-made changes are the responsibility of the customer.

Notes

- The motor cable terminals on the drive are at a dangerously high voltage when the input power is on, regardless of whether the motor operates.
- The brake control terminals (UDC+, UDC-, R+ and R- terminals) have a dangerous DC voltage (over 500 V).
- Depending on the external wiring, dangerous voltages (115 V, 220 V or 230 V) can be present on the terminals of relay outputs RO1 to RO3 or on the optional AGPS board (Prevention of unexpected start-up).
- The Prevention of unexpected start-up function (option +Q950) does not remove the voltage from the main circuit or auxiliary circuits.

- The Safe torque off function (option +Q967) does not remove the voltage from the main circuit or auxiliary circuits.
- At installation sites that are above 2000 m (6562 ft), the terminals of the RMIO board and option modules attached to the board do not fulfill the Protective Extra Low Voltage (PELV) requirements in EN 50178 and EN 61800-5-1.

Grounding

These instructions are intended for all persons that are responsible for the grounding of the drive.

WARNING! If you ignore these instructions, it can cause physical injury, death, increased electromagnetic interference and equipment malfunction:

- Ground the drive, motor and adjoining equipment to ensure personnel safety in all circumstances, and to reduce electromagnetic emission and interference.
- Make sure that the grounding conductors are adequately sized as required by the safety regulations.
- In a multiple-drive installation, connect each drive separately to the protective earth (PE).
- In European CE compliant installations and in other installations where EMC emissions must be minimized, make a 360° high-frequency grounding of the cable entries in order to suppress electromagnetic disturbances. In addition, connect the cable shields to the protective earth (PE) in order to meet safety regulations.
- Do not install a drive with EMC filter option +E202 or +E200 on an ungrounded power system or a high-resistance-grounded (more than 30 ohms) power system. Before you connect the drive to the power system, disconnect the EMC filter capacitors as described in IT (ungrounded) systems on page 70.

Notes

- Power cable shields are suitable for equipment grounding conductors only when adequately sized to meet safety regulations.
- As the normal leakage current of the drive is more than 3.5 mA AC or 10 mA DC (EN 61800-5-1, 4.3.5.5.2), a fixed protective earth connection is required.

Mechanical installation and maintenance

These instructions are intended for all persons that install and service the drive.

WARNING! If you ignore these instructions, physical injury or death, or damage to the equipment can occur:

- Handle the unit carefully.
- The drive is heavy. Do not lift it alone. Do not lift the unit by the front cover. Place the unit only on its back.

Do not tilt!

- Beware of hot surfaces. Some parts, such as heat sinks, are hot for a while after disconnection.
- Make sure that dust from drilling, boring and grinding does not go into the drive. Electrically conductive dust inside the unit can cause damage or faults.
- Make sure that cooling is sufficient.
- Do not attach the drive by riveting or welding.

Printed circuit boards

WARNING! If you ignore these instructions, damage to the printed circuit boards can occur.

The printed circuit boards have components that are sensitive to electrostatic discharge. Use an ESD wrist band when you touch the printed circuit boards. Do not touch them unnecessarily.

Fiber-optic cables

WARNING! If you ignore these instructions, it can cause equipment malfunction and damage to the fiber-optic cables:

Handle the fiber-optic cables with care. When you disconnect fiber-optic cables, always hold the connector, not the cable. Do not touch the ends of the fibers with bare hands as the fiber is extremely sensitive to dirt. The minimum allowed bend radius is 35 mm (1.4 in.).

Operation

These warnings are intended for all persons that plan the operation of the drive or operate the drive.

WARNING! If you ignore these instructions, physical injury or death, or damage to the equipment can occur:

Before you adjust the drive and put it into service, make sure that the motor and all of the driven equipment are suitable for operation throughout the speed range provided by the drive. The drive can be adjusted to operate the motor at speeds above and below the speed provided by connecting the motor directly to the power line.

Before you activate the automatic fault reset or automatic restart functions of the drive control program, make sure that no dangerous situations can occur. These functions reset the drive automatically and continue operation after a fault or supply break. If these functions are activated, the installation must be clearly marked as defined in IEC/EN 61800-5-1, subclause 6.5.3, for example, "THIS MACHINE STARTS AUTOMATICALLY".

Do not control the motor with the disconnecting device. Use the control panel keys and , or commands through the I/O board of the drive. The maximum allowed number of charging cycles of the DC capacitors (that is, power-ups by applying power) is five in ten minutes.

The Safe torque off function (option +Q967) can be used for stopping the drive in emergency stop situations. In the normal operating mode, use the Stop command instead.

Notes

If an external source for the start command is selected and it is ON, the drive (with the Standard Control Program) starts immediately after a fault reset unless the drive is configured for 3-wire (a pulse) start/stop.

When the control location is not set to Local (L not shown in the status row of the display), the Stop key on the control panel does not stop the drive. To stop the drive using the control panel, press the LOC/REM key and then the Stop key .

Permanent magnet motor

These are additional warnings for permanent magnet motor drives. If you ignore the instructions, physical injury or death, or damage to the equipment can occur.

Control a permanent magnet motor only with the ACS800 Permanent Magnet Synchronous Motor Drive Control Program.

Installation and maintenance work

WARNING! Do not do work on the drive when the permanent magnet motor turns. When the supply power is off and the inverter is stopped, a turning permanent magnet motor feeds power to the intermediate circuit of the drive and the supply connections become live.

Before you do installation and maintenance work on the drive:

- Stop the motor.
- Make sure that the motor cannot turn during work. Prevent the start-up of any drives in the same group by opening the Prevention of unexpected start switch (option +Q950) or the Safe torque off switch (option +Q967) and locking it. Make sure that no other system, such as hydraulic crawling drives, are able to turn the motor directly or through any mechanical connection such as felt, nip, rope, and so on.
- Make sure that there is no voltage on the drive power terminals:
  Alternative 1) Disconnect the motor from the drive with a safety switch or by other means. Measure that there is no voltage present on the drive input, output or DC terminals (U1, V1, W1, U2, V2, W2, UDC+, UDC-).
  Alternative 2) Measure that there is no voltage present on the drive input, output or DC terminals (U1, V1, W1, U2, V2, W2, UDC+, UDC-). Ground the drive output terminals temporarily by connecting them together and to the PE.
  Alternative 3) If it is possible, do both of the above.

Start-up and operation

WARNING! Do not run the motor over the rated speed. Motor overspeed leads to overvoltage which can damage the capacitors in the intermediate circuit of the drive.

2

Introduction to this manual

What this chapter contains

This chapter describes the intended audience and contents of this manual. It has a flowchart of steps to check the delivery, install and commission the drive. The flowchart refers to parts in this manual and other manuals.

Intended audience

This manual is intended for persons who plan the installation, install, commission, use and service the drive. Read this manual before you do work on the drive. The reader is expected to know the fundamentals of electricity, wiring, electrical components and electrical schematic symbols.

This manual is written for a global audience. Both SI and imperial units are shown. Special US instructions for installations within the United States that must be installed per the National Electrical Code and local codes are marked with (US).

Categorization according to the frame size

Some instructions, technical data and dimensional drawings that concern specific frame sizes are marked with the symbol of the frame size R2, R3... or R8. The frame size is not marked on the drive designation label. To identify the frame size of your drive, see the rating tables in *Technical data* (page 119).

The ACS800-11/U11 is manufactured in frame sizes R5 and R6.

Categorization according to the plus code

The instructions, technical data and dimensional drawings which concern only certain optional selections are marked with plus codes, for example, +E202. The options included in the drive can be identified from the plus codes on the type designation label. For the plus code selections, refer to *Type code* (page 33).

Contents

The chapters of this manual are briefly described below.

Safety instructions (page 11) give safety instructions for the installation, commissioning, operation and maintenance of the drive.

Introduction to this manual (page 17) lists the steps in checking the delivery and installing and commissioning the drive and refers to parts in this manual and other manuals for particular tasks.

Operation principle and hardware description (page 23) describes the drive.

Mechanical installation (page 35) instructs in how to place and mount the drive.

Planning the electrical installation (page 45) instructs in the motor and cable selection, protections and cable routing.

Electrical installation (page 69) shows how to wire the drive.

Installation of the AGPS board (Prevention of unexpected start-up, +Q950) (page 83) describes the electrical installation of the optional Prevention of unexpected start-up function (+Q950).

Installation of the ASTO board (Safe torque off, +Q967) (page 89) describes the electrical installation of the optional Safe torque off function (+Q967).

Motor control and I/O board (RMIO) (page 93) shows the external control connections to the I/O board.

Installation checklist (page 101) contains a list for checking the mechanical and electrical installation of the drive.

Start-up and use (page 103) contains guide lines of the start-up and use of the drive.

Actual signals and parameters (page 107) contains listings of parameters specific to the ACS800-11 and ACS800-U11.

Maintenance (page 113) contains preventive maintenance instructions.

Fault tracing (page 117) contains guidelines for fault tracing.

Technical data (page 119) contains the technical specifications of the drive, e.g. the ratings, sizes and technical requirements and provisions for fulfilling the requirements for CE and other markings.

Dimensional drawings (page 137) contains the dimensional drawings of the drive.

External +24 V power supply for the RMIO boards via terminal X34 (page 145) describes how to connect an external +24 V power supply for the RMIO board via terminal X34.

Installation and commissioning flowchart

Task	See
Identify the frame size of your drive: R5 or R6.	IEC data (page 119) or NEMA data (page 125)
Plan the installation. Check the ambient conditions, ratings, required cooling air flow, input power connection, compatibility of the motor, motor connection, and other technical data. Select the cables.	Technical data (page 119) Planning the electrical installation (page 45) For compliance with the European Union EMC Directive, see CE marking (page 132). Option manual (if optional equipment is included)
Unpack and check the units. Check that all necessary optional modules and equipment are present and correct. Only intact units may be started up.	Unpacking the unit (page 35) If the converter has been non-operational for more than one year, the converter DC link capacitors need to be reformed, see Capacitors (page 116)
If the drive is about to be connected to an IT (ungrounded) system, check that the drive is not equipped with EMC filtering intended for grounded systems, or disconnect the EMC filter capacitors.	Type code (page 33) IT (ungrounded) systems (page 70)
Check the installation site.	Before installation (page 38) Technical data (page 119)
Install the drive on a wall or in a cabinet.	Mechanical installation (page 35)
Route the cables.	Routing the cables (page 67) For compliance with the European Union EMC Directive, see CE marking (page 132)
Check the insulation of the motor and the motor cable.	Checking the insulation of the installation (page 69)

Task	See
Connect the power cables. Connect the motor cable.	Electrical installation (page 69)
Connect the control and auxiliary control cables.	Electrical installation (page 69), Motor control and I/O board (RMIO) (page 93), and the optional module manual delivered with the module.
Check the installation.	Installation checklist (page 101)
Commission the drive.	Start-up and use (page 103), appropriate application program firmware manual

Terms and abbreviations

Term / Abbreviation	Description
AGPS	Power supply board for IGBT gate driver boards. Used in implementation of the optional Prevention of unexpected start-up function.
AIMA	I/O module adapter. An extension unit for mounting I/O extension modules outside the drive unit.
ASTO	Safe torque off board. An optional board used to implement the Safe torque off function.
CDP 312R	Control panel type
DDCS	Distributed drives communication system. A protocol used in optical fiber communication.
DTC	Direct torque control
EMC	Electromagnetic compatibility
GCUR	Current measurement board
GDIO	Charging diode board
GINT	Main circuit board
GRFC	Filter board
GRFCU	EMC filter unit
GVAR	Varistor board
IGBT	Insulated gate bipolar transistor
IT system	Type of supply network that has no (low-impedance) connection to ground/earth.
PCC	Point of common coupling
POUS	Prevention of unexpected start-up
RAIO	Analog I/O extension module
RCAN	CANopen adapter module
RCNA	ControlNet adapter module
RDCO	DDCS communication module
RDIO	Digital I/O extension module
RDNA	DeviceNet™ adapter module
RETA	Ethernet adapter module for Modbus/TCP and EtherNet/IP protocols
RFI	Radio-frequency interference
RIBA	InterBus-S adapter module
RLON	LonWorks® adapter module
RMBA	Modbus adapter module
RMBP	Modbus plus adapter module
RMIO	Supply/motor control and I/O board
RPBA	PROFIBUS-DP adapter module
RRFC	RFI filter board (filter board for meeting the EMC requirements)
RRIA	Resolver adapter module
RTAC	Pulse encoder adapter module
STO	Safe torque off
THD	Total harmonic distortion
TN system	Type of supply network that provides a direct connection to ground (earth)

3

Operation principle and hardware description

What this chapter contains

This chapter describes the operating principle and construction of the drive in brief.

Product overview

The ACS800-11/U11 is a four-quadrant wall mountable drive for controlling AC motors. The main circuit consists of two IGBT converters, a line-side converter and a motor-side converter, integrated into the same frame.

IP21 (UL type 1)

Frame size R6

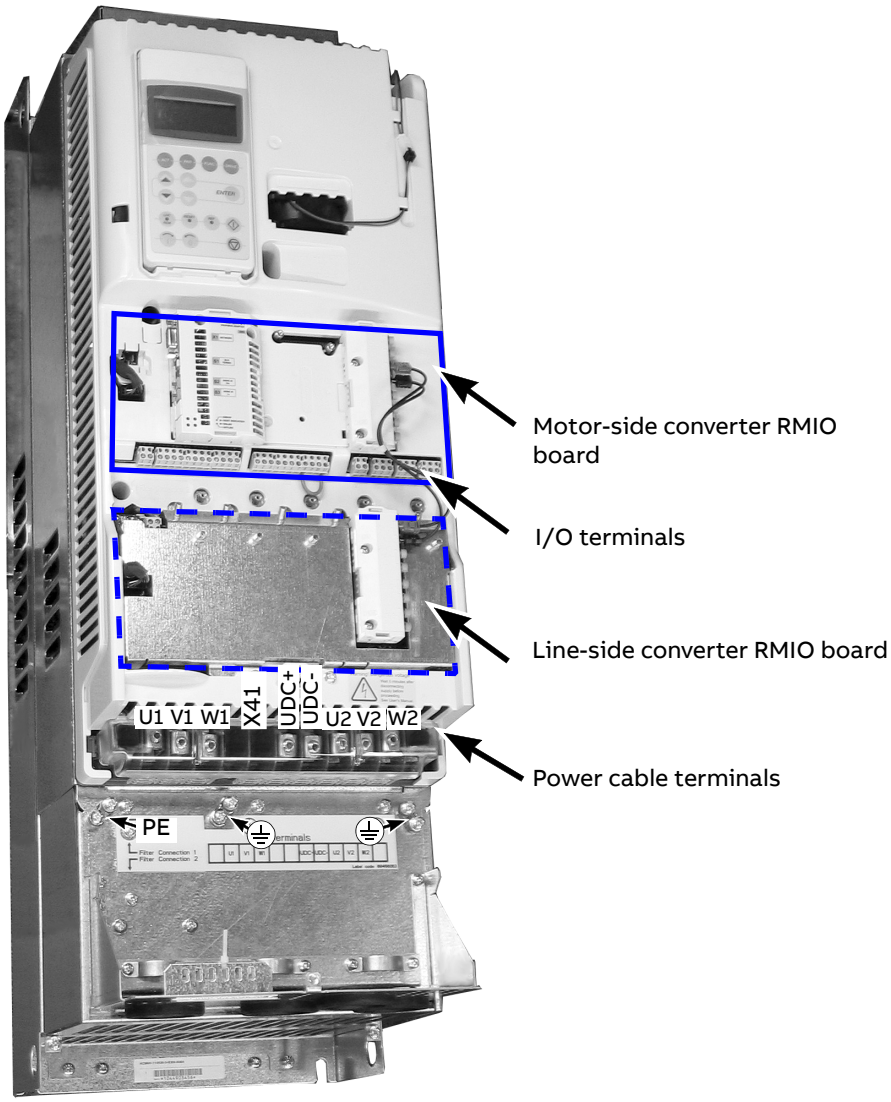

Frame size R5 without front and connection box covers

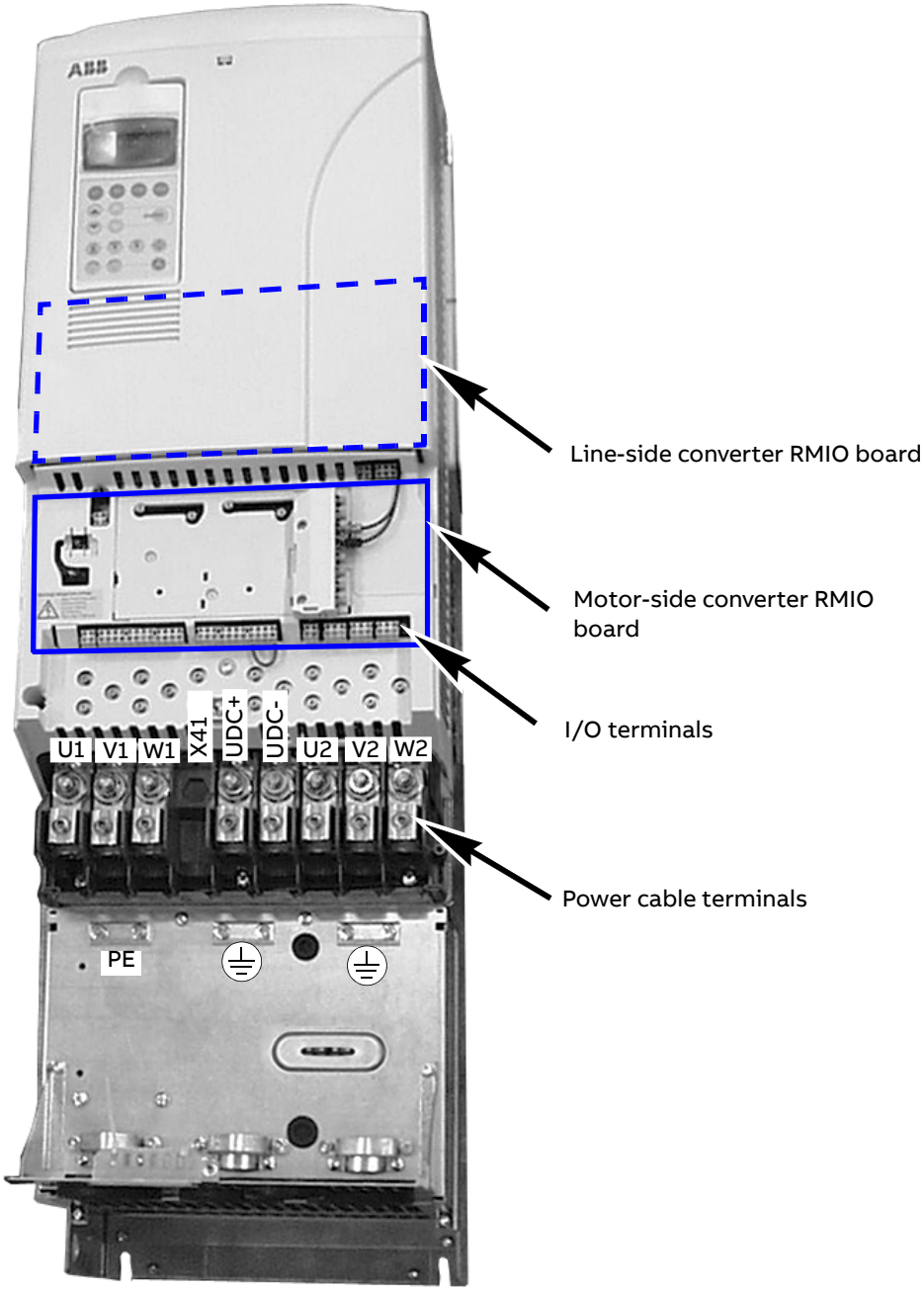

Frame size R6 without front and connection box covers

Terms

Line-side converter: A converter that is connected to the supply network and is capable of transferring energy from the network to the DC link or from the DC link to the network.

Motor-side converter: A converter that is connected to the motor and controls the motor operation.

Four-quadrant operation: Operation of a machine as a motor or generator in quadrants I, II, III and IV as shown below. In quadrants I and III, the machine operates as a motor, whereas in quadrants II and IV as a generator (regenerative braking).

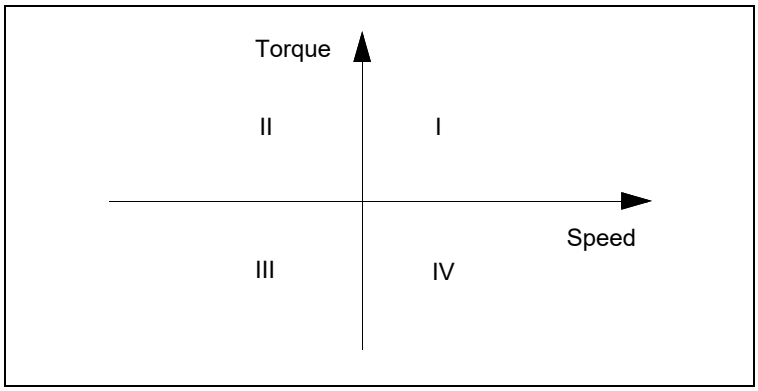

Operation principle

The line-side and motor-side converters consist of six insulated gate bipolar transistors with free wheeling diodes.

The converters have their own control programs. The parameters of both programs can be viewed and changed using one control panel. The control panel can be switched between the converters as described in *Start-up and use* (page 103).

Line-side converter

The IGBT supply module rectifies three phase AC current to direct current for the intermediate DC link of the drive. The intermediate DC link is further supplying the motor-side converter that runs the motor. The line filter suppresses the AC voltage and current harmonics.

The IGBT supply module is a four-quadrant switching-mode converter, that is, the power flow through the converter is reversible. By default, the converter controls the DC link voltage to the peak value of the line-to-line voltage. The DC voltage reference can be set also higher by a parameter. The control of the IGBT power semiconductors is based on the Direct Torque Control (DTC) method also used in the motor control of the drive. Two line currents and the DC link voltage are measured and used for the control.

AC voltage and current waveforms

The AC current is sinusoidal at a unity power factor. The IGBT supply unit does not generate characteristic current or voltage overtones like a traditional 6- or 12-pulse bridge does.

The Total Harmonic Distortion (THD) in current is given in *Input power connection* (page 128). The THD in voltage depends slightly on the Short Circuit Ratio in the Point of Common Coupling (PCC). The high frequency switching and high d*u*/d*t* slightly distort the voltage waveform at the input of the converter.

Typical line current (*i*) and voltage (*u*) waveforms are shown below.

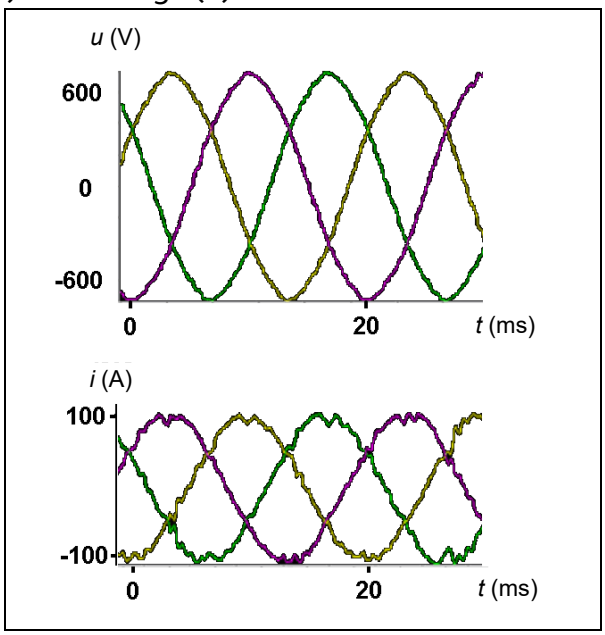

Example spectra of the current and voltage distortion at the output of the transformer are shown below. Each harmonic is presented as compared to fundamental voltage (reference value = 1). n denotes the ordinal number of the harmonic.

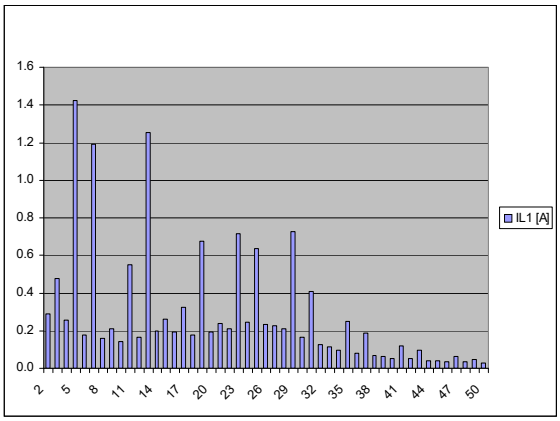

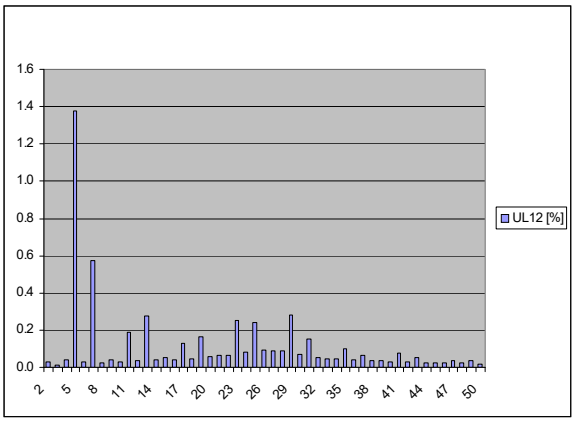

Motor control

The motor control is based on the Direct Torque Control (DTC) method. Two phase currents and DC link voltage are measured and used for the control. The third phase current is measured for earth fault protection.

Printed circuit boards

The drive contains the following printed circuit boards as standard:

- main circuit board (GINT)
- motor control and I/O board (RMIO), 2 pcs
- EMC filter unit (GRFCU) when EMC equipment is selected
- filter boards (GRFC or RRFC)
- varistor board (GVAR)
- control panel (CDP 312R)
- current measurement board (GCUR, in frame size R5 only)
- charging diode board (GDIO).

DDCS communication modules

The drive includes an RDCO-03 module in the line-side converter and another RDCO module in the motor-side converter.

Main circuit and control diagram

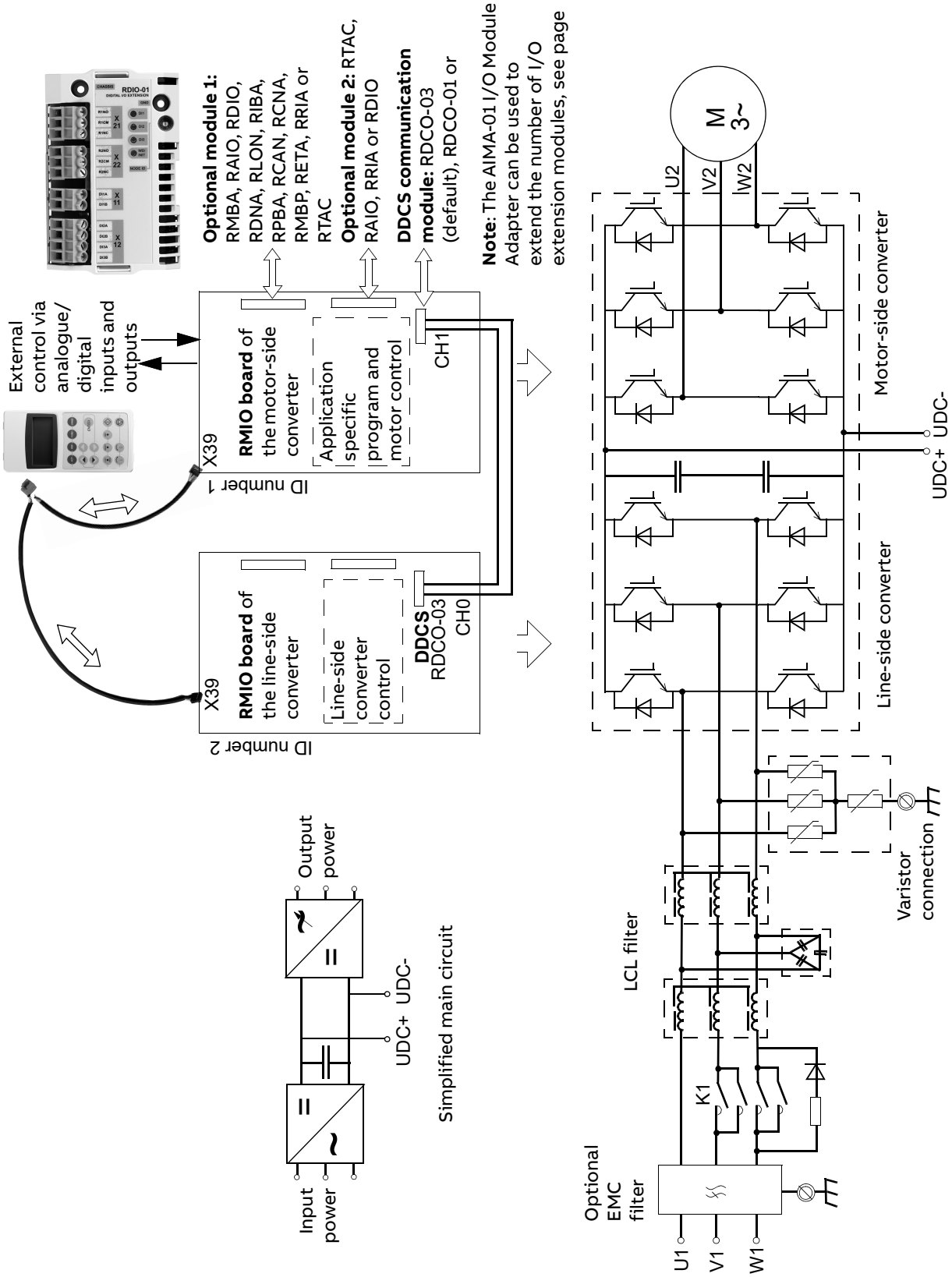

Fieldbus control interface

Optional fieldbus modules cannot be inserted in the optional module slots of the RMIO board of the line-side converter. Fieldbus control of the line-side converter is done through the motor-side converter RMIO board as shown in the block diagram below.

Control block diagram

The figure below shows the parameters for DC and reactive power reference selection. The AMC table contains actual values and parameters of the line-side converter.

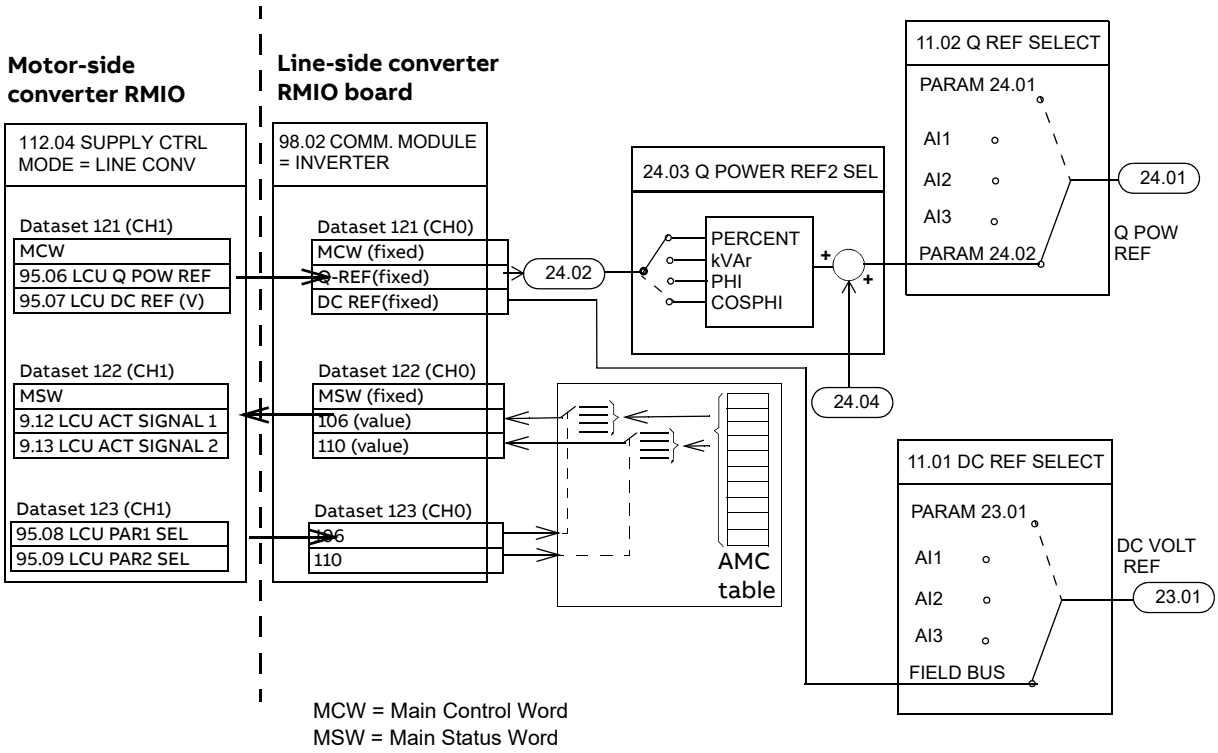

Connection diagram of the RMIO board in the line-side converter

Internal connections to the RMIO board for the ACS800 IGBT Supply Control Program are shown below. Do not change the connections.

Terminal block size:

cables 0.3 to 3.3 mm^2 (22 to 12 AWG)

Tightening torque:

0.2 to 0.4 N·m (0.2 to 0.3 lbf·ft)

[1] non-programmable I/O

[2] External earth (ground) fault indication via digital input DI4: See parameter 30.04 EXT EARTH FAULT.

[3] External alarm/fault indication via digital input DI5: See parameter 30.05 EXT EVENT.

[4] START command via digital input DI7: See parameter 16.01 RUN BIT SEL.

X20

1	VREF-	Reference voltage -10 VDC, 1 kohm ≤ R_L ≤ 10 kohm
2	GND	

X21

1	VREF+	Reference voltage 10 VDC, 1 kohm ≤ R_L ≤ 10 kohm
2	GND	
3	AI1+	By default, not in use. 0(2)...10 V, R_{in} > 200 kohm
4	AI1-	
5	AI2+	By default, not in use. 0(4)...20 mA, R_{in} = 100 ohm
6	AI2-	
7	AI3+	By default, not in use. 0(4)...20 mA, R_{in} = 100 ohm
8	AI3-	
9	AO1+	By default, not in use. 0(4)...20 mA, R_L ≤ 700 ohm
10	AO1-	
11	AO2+	By default, not in use. 0(4)...20 mA, R_L ≤ 700 ohm
12	AO2-	

X22

1	DI1	Acknowledgment of converter fan [1]
2	DI2	Stop/Start
3	DI3	Acknowledgment from main contactor [1]
4	DI4	By default not in use. [2]
5	DI5	By default not in use. [3]
6	DI6	By default not in use.
7	+24V	+24 VDC max. 100 mA
8	+24V	
9	DGND	Digital ground
10	DGND	Digital ground
11	DI7(DIIL)	By default not in use. [4]

X23

1	+24V	Auxiliary voltage output and input, non-isolated, 24 VDC 250 mA
2	GND	

X25

1	RO11	Relay output 1: By default not in use.
2	RO12	
3	RO13	

X26

1	RO21	Relay output 2: By default not in use.
2	RO22	
3	RO23	

X27

1	RO31	Relay output 3: Main contactor control [1]
2	RO32	
3	RO33	

+ 24 VDC

-

Type code

The type code contains information on the specifications and configuration of the drive. The first digits from left express the basic configuration (for example, ACS800-11-0025-3 or ACS800-U11-0025-3). The optional selections are given thereafter, separated by plus signs (for example, +E200 and +K454). The main selections are described below. Not all selections are available for all types. For more information, refer to *ACS800 Ordering Information* (EN code: 3AFY64556568, available on request).

Selection	**Alternatives**	
Product series	ACS800 product series	
Type	11	Regenerative, wall mounted. When no options are selected: IP21, Control Panel CDP 312R, DDCS communication option module RDCO-03, no EMC filter, Standard Control Program, cable connection box (cabling from below), boards with coating, one set of English manuals.
	U11	Regenerative, wall mounted (USA). When no options are selected: UL type 1, Control Panel CDP 312R, DDCS communication option module RDCO-03, no EMC filter, US version of the Standard Control Program (three-wire start/stop as default setting), US gland/conduit plate, boards with coating, one set of English manuals.
Size	Refer to *IEC data* (page 119) or *NEMA data* (page 125).	
Voltage range (nominal rating in bold)	2	208/220/**230**/240 V AC
	3	380/**400**/415 V AC
	5	380/400/415/440/460/480/**500** V AC
	7	525/575/600/**690** V AC
Option codes (+ codes)		
Filters	E200	EMC/RFI filter for second environment TN (grounded) system, unrestricted distribution.
	E202	EMC/RFI filter for first environment TN (grounded) system, restricted distribution.
Cabling	H357	European lead-through plate
	H358	US/UK gland/conduit plate
Control panel	0J400	No control panel
Fieldbus	K...	Refer to *ACS800 Ordering Information* (EN code: 3AFY64556568).
I/O	L...	
control program	N...	
Manual language	R...	
Safety features	Q950	Prevention of unexpected start-up
	Q967	Safe torque off (STO) function without safety relay
Specialties	P904	Extended warranty
		Duct plates for cabinet installation can be ordered with kit codes: frame size R5: 68654122 frame size R6: 68654131

4

Mechanical installation

What this chapter contains

This chapter contains unpacking instructions, the delivery checklist and the mechanical installation instructions of the drive.

Unpacking the unit

The drive is delivered in a box that also contains:

- Plastic bag with screws (M3), clamps and cable lugs (2 mm^2, M3) for grounding the control cable screens
- Residual voltage warning labels
- Hardware manual
- Firmware manuals and guides
- Optional module manuals
- Delivery documents

To unpack the package, cut the bands (A) and remove the outer box (B) and sleeve (C).

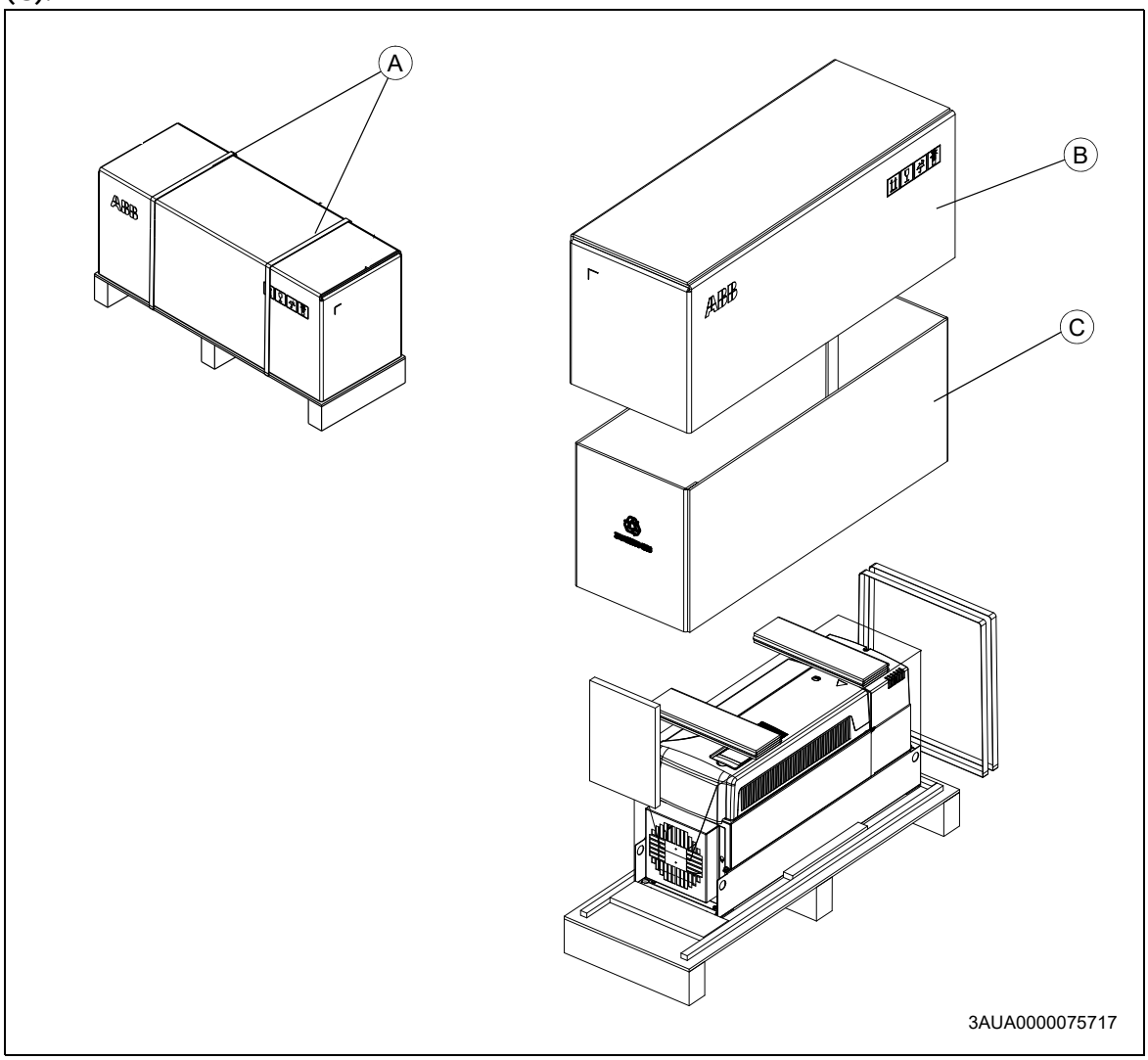

Checking the delivery

Check that all items listed in *Unpacking the unit* (page 35) are present.

Check that there are no signs of damage. Before attempting installation and operation, check the information on the type designation label of the drive to verify that the unit is of the correct type. The label includes an IEC and NEMA rating, C-UL, CSA and CE markings, a type code and a serial number, which allow individual recognition of each unit. The first digit of the serial number refers to the manufacturing plant. The next four digits refer to the unit's manufacturing year and week, respectively. The remaining digits complete the serial number so that there are no two units with the same serial number.

The type designation label is attached to the heatsink and the serial number label to the lower part of the back plate of the unit. Example labels are shown below.

Type designation label

Serial number label

Moving the unit

Lift the unit using the lifting holes at the top and bottom.

Lifting a unit of frame size R6

Before installation

The drive must be installed in an upright position with the cooling section facing a wall. Check the installation site according to the requirements below. Refer to *Dimensional drawings* (page 137) for frame details.

WARNING! Do not remove the protective film that covers the unit before the installation procedure is complete. It protects the unit from pieces of wire cuttings or other solid particles that can penetrate the unit during installation. Remove the film just before starting up the unit.

Requirements for the installation site

See *Technical data* (page 119) for the allowed operation conditions of the drive.

Wall

The wall should be as close to vertical as possible, of non-flammable material and strong enough to carry the weight of the unit. Check that there is nothing on the wall to inhibit the installation.

Floor

The floor/material below the installation should be non-flammable.

Free space around the unit

Required free space around the drive to enable cooling air flow, service and maintenance is shown below in millimeters and [inches].

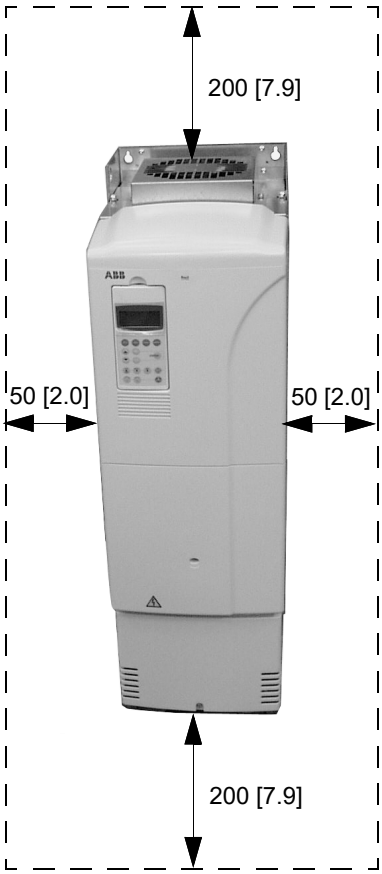

IP21 (UL 1)

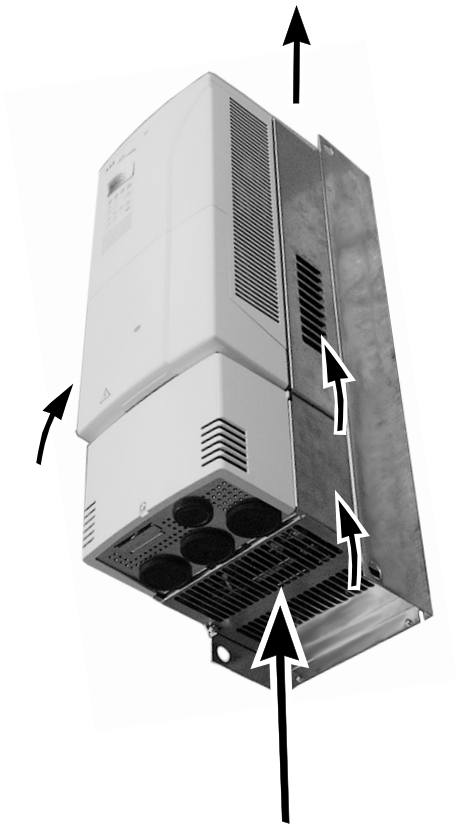

Cooling air flow

Mounting the drive on the wall

Units without vibration dampers

1. Mark the locations for the four holes. The mounting points are shown in *Dimensional drawings* (page 137).
2. Fix the screws or bolts to the marked locations.
3. Position the drive onto the screws on the wall.
   Lift the drive by its lifting holes, not by its cover.
4. Tighten the screws in the wall securely.

Units with vibration dampers

In applications with considerable vibration in the frequency range of 50 Hz to 100 Hz, vibration dampers can be used. See *ACS800 Vibration Damper Installation Guide* [3AFE68295351 (English)].

Appropriate vibration dampers are GC3-50MS (kit code 68295581):

- for units of frame size R5, four dampers
- for units of frame size R6, six dampers

Note that the kit includes only four vibration dampers, but units of frame size R6 require six. Two dampers are installed in the middle.

Cabinet installation

The drive can be installed in a cabinet without the plastic front, top and connection box covers and without the lead-through plate. Vibration dampers are not needed.

The required distance between parallel units is 50 millimeters (1.97 in.) in installations without the front cover. The cooling air entering the unit must not exceed +40 °C (+104 °F).

You can also use duct plates in the cabinet installation, see *Installing cabinet duct plates (optional)* (page 41).

Preventing cooling air recirculation

Prevent air recirculation inside and outside the cabinet.

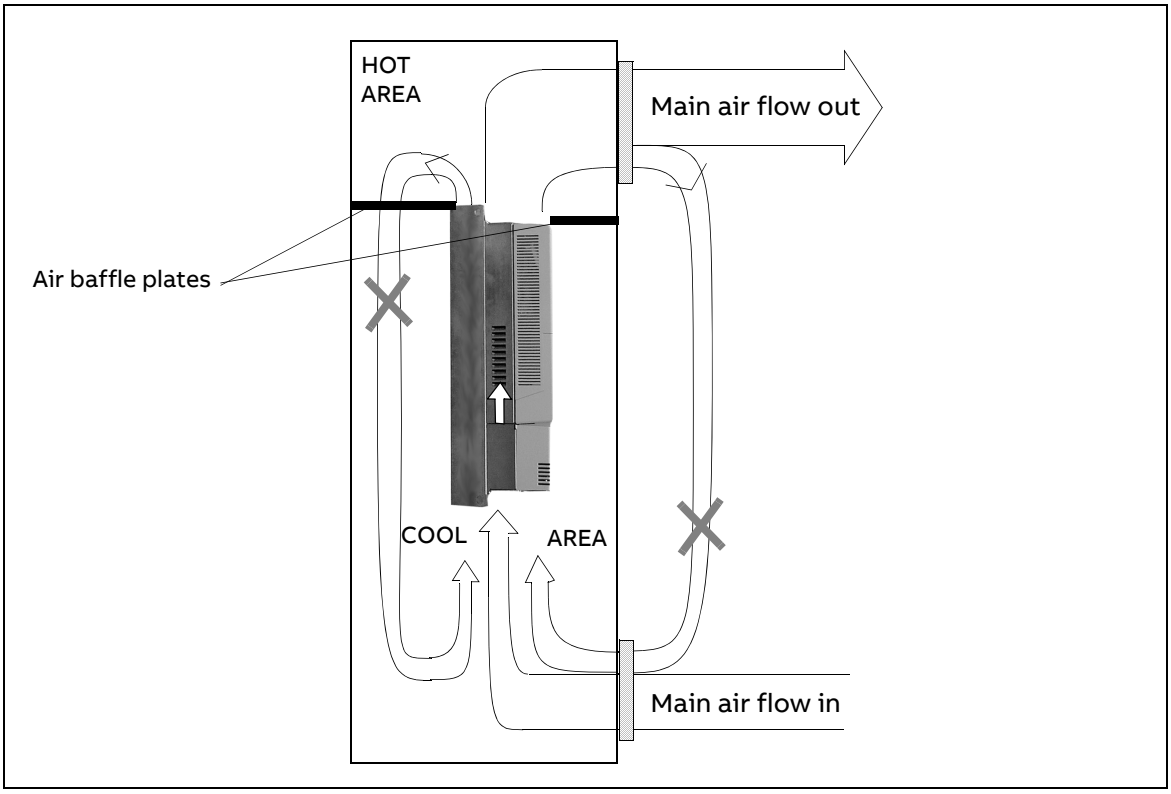

Unit above another

Lead the out-coming hot cooling air away from the air input of the drive above.

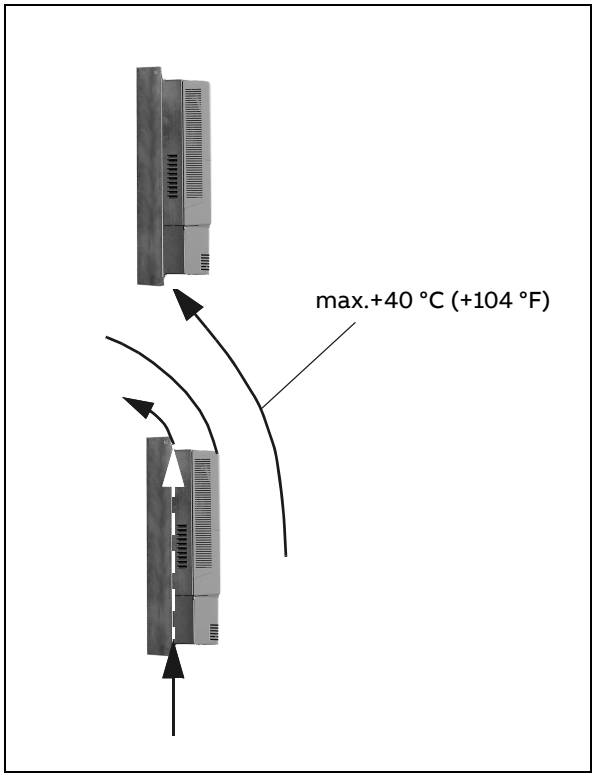

Installing cabinet duct plates (optional)

If the drive is installed in a cabinet that is inside a cooling air duct, duct plates can be used to lead the air flow.

Installation kits

Separate installation kits for cabinet duct plates can be ordered with the following kit codes:

- Frame R5: 68654122
- Frame R6: 68654131.

The installation kit contains the following parts:

- Left collar (A in the figure on page 43)
- Right collar (B)
- Top collar (C)
- Bottom collar (D)

Screws are not included in the installation kit. The following screws are needed:

- Frame R5:
  18 pieces: M5X12, torque 3 N·m (2.2 lbf·ft)
  2 pieces: M4X16, torque 1.2 N·m (0.9 lbf·ft)
  2 pieces: M4X12, torque 1.2 N·m (0.9 lbf·ft)
- Frame R6:
  20 pieces: M5X12, torque 3 N·m (2.2 lbf·ft)
  2 pieces: M4X25, torque 1.2 N·m (0.9 lbf·ft)
  2 pieces: M4X12, torque 1.2 N·m (0.9 lbf·ft)

Before you start

Prepare the cabinet by following the requirements given in this manual and the dimensional drawings on pages 140 and 141.

The drive must always be fixed into the cabinet by using the original 4 fixing holes on the bottom plate, never by the collars only.

The cabinet supports (E) can be installed before or after installing the drive, but it may be easier to install the drive before the supports.

Installation

The following figure shows the installation procedure for a drive of frame size R5. In frame size R6, the design of the bottom collar (D) is slightly different.

1. After the drive and cabinet supports (E) have been installed, install the left (A) and right collars (B) by pushing them first in the grooves on both sides of the drive, and attach them with 10 pcs of M5x12 screws (frame R6: 12 pcs) in the cabinet supports.
2. Fix 4 pcs of M5x12 screws in the left (A) and right collars (B), and install the top collar (C) against the left and right collars through the screws.
3. Push down the top collar in the groove on the top of the drive and tighten the screws.
4. Fix 4 pcs of M5x12 screws in the left (A) and right collars (B), and install the bottom collar (D) against the left and right collars through the screws.
5. Push up the bottom collar in the groove on the bottom of the drive and tighten the screws.
6. Fix the bottom collar to the drive with 2 pcs of M4x16 screws (frame R6: M4x25).
7. Secure the bottom collar to the drive with additional 2 pcs of M4x12 screws.

Note: If you install other parts in the cabinet, make sure that the top and bottom collars can be removed easily for maintenance purposes.

Assembly drawing for cabinet duct plates

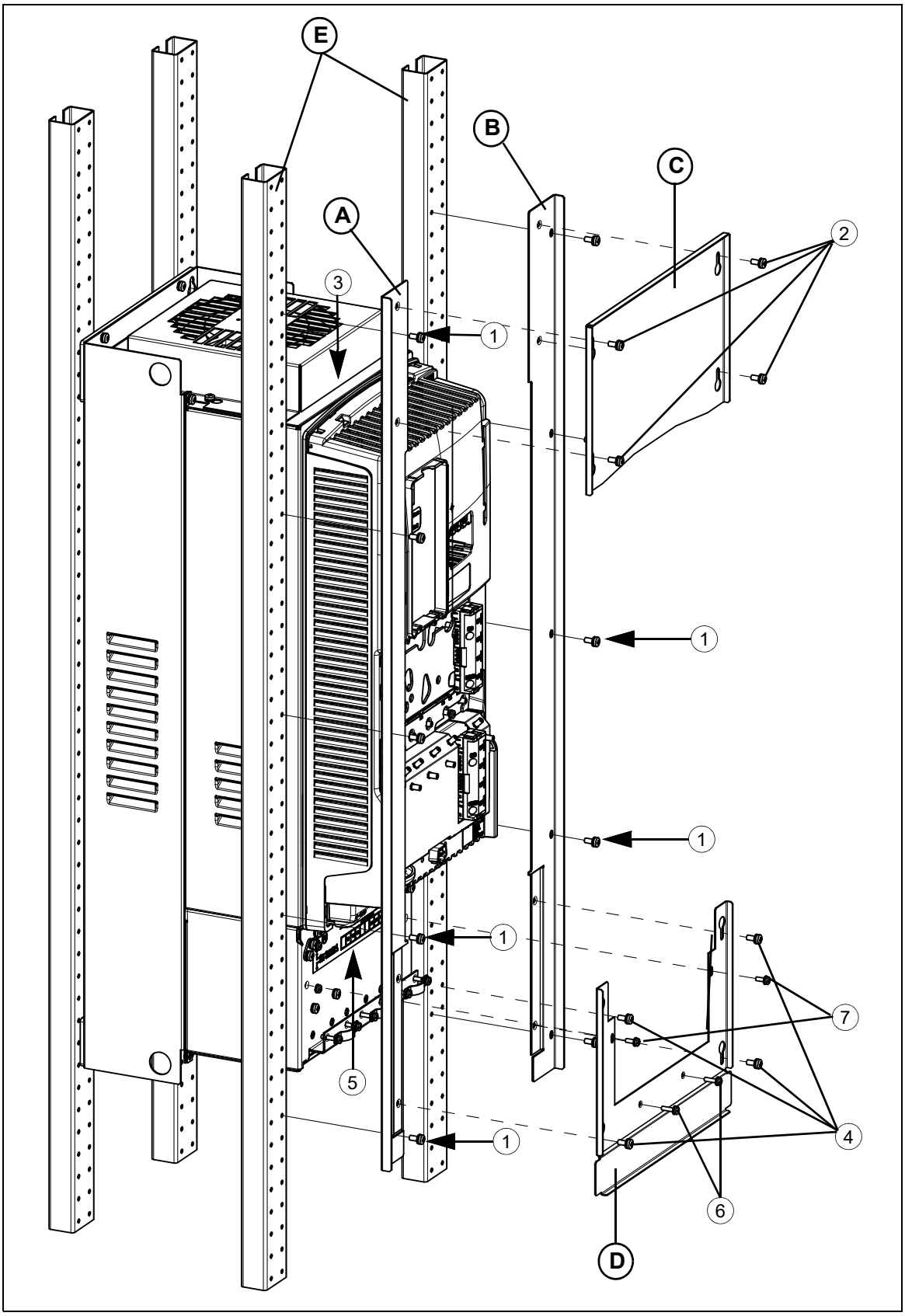

5

Planning the electrical installation

What this chapter contains

Obey the instructions in this chapter when you select the motor, cables, protections, cable routing and way of operation for the drive system.

The installation must always be designed and made according to applicable local laws and regulations. ABB does not assume any liability whatsoever for any installation which breaches the local laws and/or other regulations. Furthermore, if the recommendations given by ABB are not followed, the drive may experience problems that the warranty does not cover.

Motor selection and compatibility

1. Select the motor according to the rating tables in *Technical data* (page 119). Use the DriveSize PC tool if the default load cycles are not applicable.
2. Make sure that the motor ratings lie within the allowed ranges of the drive control program:
   - motor nominal voltage is 1/2 ... 2 · U_N of the drive
   - motor nominal current is 1/6 ... 2 · I_{2hd} of the drive in DTC control and 0 ... 2 · I_{2hd} in scalar control. The control mode is selected by a drive parameter.
3. Make sure that the motor voltage rating meets the application requirements:

If the drive has...	**...and...**	**...then the motor voltage rating should be...**
IGBT supply ACS800-11, -U11	DC link voltage is not increased from the nominal (parameter setting)	U_N
	DC link voltage is increased from the nominal (parameter setting)	U_{ACeq2}

U_N = Rated input voltage of the drive

U_{ACeq2} = $U_{DC}/1.41$

U_{DC} = the maximum DC link voltage of the drive in VDC.

For resistor braking: U_{DC}= 1.21 × nominal DC link voltage.

For units with IGBT supply: See the parameter value.

Note: Nominal DC link voltage is (in VDC):
U_N × 1.35 when the IGBT supply is stopped or
U_N × 1.41 when the IGBT supply is on.

See notes 7 and 8 below the *Requirements table* (page 48).

4. Consult the motor manufacturer before using a motor in a drive system where the motor nominal voltage differs from the AC power source voltage.
5. Ensure that the motor insulation system withstands the maximum peak voltage in the motor terminals. See the *Requirements table* (page 48) for the required motor insulation system and drive filtering.

   Example 1: When the supply voltage is 440 V and a drive with a diode supply is operating in motor mode only, the maximum peak voltage in the motor terminals can be approximated as follows: 440 V · 1.35 · 2 = 1190 V. Check that the motor insulation system withstands this voltage.

   Example 2: When the supply voltage is 440 V and the drive has an IGBT supply, the maximum peak voltage in the motor terminals can be approximated as follows: 440 V · 1.41 · 2 = 1241 V. Check that the motor insulation system withstands this voltage.

Protecting the motor insulation and bearings

The output of the drive comprises – regardless of output frequency – pulses of approximately 1.35 times the equivalent mains network voltage with a very short rise time. This is the case with all drives employing modern IGBT inverter technology.

The voltage of the pulses can be almost double at the motor terminals, depending on the attenuation and reflection properties of the motor cable and the terminals. This in turn can cause additional stress on the motor and motor cable insulation.

Modern variable speed drives with their fast rising voltage pulses and high switching frequencies can generate current pulses that flow through the motor bearings, which can gradually erode the bearing races and rolling elements.

The stress on motor insulation can be avoided by using optional ABB d*u*/d*t* filters. d*u*/d*t* filters also reduce bearing currents.

To avoid damage to motor bearings, the cables must be selected and installed according to the instructions given in the hardware manual. In addition, insulated N-end (non-driven end) bearings and output filters from ABB must be used according to the following table. Two types of filters are used individually or in combinations:

- optional d*u*/d*t* filter (protects motor insulation system and reduces bearing currents).
- common mode filter (mainly reduces bearing currents).

Requirements table

The following table shows how to select the motor insulation system and when an optional drive d*u*/d*t* and common mode filters and insulated N-end (non-drive end) motor bearings are required. Ignoring the requirements or improper installation may shorten motor life or damage the motor bearings and voids the warranty.

Manufacturer	Motor type	Nominal mains voltage (AC line voltage)	Requirement for			
			Motor insulation system	ABB d*u*/d*t* filter, insulated N-end bearing and ABB common mode filter		
				P_N < 100 kW and frame size < IEC 315	100 kW ≤ P_N < 350 kW or frame size ≥ IEC 315	P_N ≥ 350 kW or frame size ≥ IEC 400
				P_N < 134 hp and frame size < NEMA 500	134 hp ≤ P_N < 469 hp or frame size ≥ NEMA 500	P_N ≥ 469 hp or frame size > NEMA 580
ABB	Random-wound M2_, M3_ and M4_	U_N ≤ 500 V	Standard	-	+ N	+ N + CMF
		500 V < U_N ≤ 600 V	Standard	+ d*u*/d*t*	+ d*u*/d*t* + N	+ d*u*/d*t* + N + CMF
			or			
			Reinforced	-	+ N	+ N + CMF
		600 V < U_N ≤ 690 V (cable length ≤ 150 m)	Reinforced	+ d*u*/d*t*	+ d*u*/d*t* + N	+ d*u*/d*t* + N + CMF
		600 V < U_N ≤ 690 V (cable length > 150 m)	Reinforced	-	+ N	+ N + CMF
	Form-wound HX_ and AM_	380 V < U_N ≤ 690 V	Standard	n.a.	+ N + CMF	P_N < 500 kW: + N + CMF
						P_N ≥ 500 kW: + N + CMF + d*u*/d*t*
	Old* form-wound HX_ and modular	380 V < U_N ≤ 690 V	Check with the motor manufacturer.	+ d*u*/d*t* with voltages over 500 V + N + CMF		
	Random-wound HX_ and AM_ **	0 V < U_N ≤ 500 V	Enameled wire with fiberglass taping	+ N + CMF		
		500 V < U_N ≤ 690 V		+ d*u*/d*t* + N + CMF		
	HDP	Consult the motor manufacturer.				

Manufacturer	Motor type	Nominal mains voltage (AC line voltage)	Requirement for			
			Motor insulation system	ABB d*u*/d*t* filter, insulated N-end bearing and ABB common mode filter		
				P_N < 100 kW and frame size < IEC 315	100 kW ≤ P_N < 350 kW or frame size ≥ IEC 315	P_N ≥ 350 kW or frame size ≥ IEC 400
				P_N < 134 hp and frame size < NEMA 500	134 hp ≤ P_N < 469 hp or frame size ≥ NEMA 500	P_N ≥ 469 hp or frame size > NEMA 580
NON-ABB	Random-wound and form-wound	U_N ≤ 420 V	Standard: $\hat{U}_{LL}$ = 1300 V	-	+ N or CMF	+ N + CMF
		420 V < U_N ≤ 500 V	Standard: $\hat{U}_{LL}$ = 1300 V	+ d*u*/d*t*	+ d*u*/d*t* + N or + d*u*/d*t* + CMF	+ d*u*/d*t* + N + CMF
			or			
			Reinforced: $\hat{U}_{LL}$ = 1600 V, 0.2 microsecond rise time	-	+ N or CMF	+ N + CMF
		500 V < U_N ≤ 600 V	Reinforced: $\hat{U}_{LL}$ = 1600 V	+ d*u*/d*t*	+ d*u*/d*t* + N or + d*u*/d*t* + CMF	+ d*u*/d*t* + N + CMF
			or			
			Reinforced: $\hat{U}_{LL}$ = 1800 V	-	+ N or CMF	+ N + CMF
		600 V < U_N ≤ 690 V	Reinforced: $\hat{U}_{LL}$ = 1800 V	+ d*u*/d*t*	+ d*u*/d*t* + N	+ d*u*/d*t* + N + CMF
			Reinforced: $\hat{U}_{LL}$ = 2000 V, 0.3 microsecond rise time ***	-	N + CMF	N + CMF

* manufactured before 1.1.1998

** For motors manufactured before 1.1.1998, check for additional instructions with the motor manufacturer.

*** If the intermediate DC circuit voltage of the drive is increased from the nominal level by resistor braking or by the IGBT supply unit control program (parameter selectable function), check with the motor manufacturer if additional output filters are needed in the applied drive operation range.

Note 1: The abbreviations used in the table are defined below.

Abbreviation	Definition
U_N	nominal voltage of the supply network
$\hat{U}_{LL}$	peak line-to-line voltage at motor terminals which the motor insulation must withstand
P_N	motor nominal power
d*u*/d*t*	d*u*/d*t* filter at the output of the drive +E205 (or as a separate kit)
CMF	common mode filter +E208
N	N-end bearing: insulated motor non-driven end bearing
n.a.	Motors of this power range are not available as standard units. Consult the motor manufacturer.

Note 2: *Explosion-safe (EX) motors*

If you use an explosion-safe (EX) motor, follow the rules in the requirements table above. In addition, consult the motor manufacturer for any further requirements.

Note 3: *ABB high-output motors and IP23 motors*

The rated output power of high output motors is higher than what is stated for the particular frame size in EN 50347:2001. This table shows the requirements for ABB random-wound motor series (for example, M3AA, M3AP and M3BP).

Nominal AC supply voltage	**Requirement for**			
	Motor insulation system	**ABB d*u*/d*t* and common mode filters, insulated N-end motor bearings**		
		P_N < 100 kW	**100 kW ≤ P_N < 200 kW**	**P_N ≥ 200 kW**
		P_N < 140 hp	**140 hp ≤ P_N < 268 hp**	**P_N ≥ 268 hp**
U_N ≤ 500 V	Standard	-	+ N	+ N + CMF
500 V < U_N ≤ 600 V	Standard	+ d*u*/d*t*	+ N + d*u*/d*t*	+ N + d*u*/d*t* + CMF
	or			
	Reinforced	-	+ N	+ N + CMF
600 V < U_N ≤ 690 V	Reinforced	+ d*u*/d*t*	+ N + d*u*/d*t*	+ N + d*u*/d*t* + CMF

Note 4: *Non-ABB high-output and IP23 motors*

The rated output power of high output motors is higher than what is stated for the particular frame size in EN 50347:2001. The table below shows the requirements for random-wound and form-wound non-ABB motors with nominal power smaller than 350 kW. For bigger motors, consult the motor manufacturer.

Nominal AC supply voltage	**Requirement for**		
	Motor insulation system	**ABB d*u*/d*t* filter, insulated N-end bearing and ABB common mode filter**	
		P_N < 100 kW or frame size < IEC 315	**100 kW ≤ P_N < 350 kW or IEC 315 ≤ frame size < IEC 400**
		P_N < 134 hp or frame size < NEMA 500	**134 hp ≤ P_N < 469 hp or NEMA 500 ≤ frame size ≤ NEMA 580**
$U_N \leq 420$ V	Standard: $\hat{U}_{LL}$ = 1300 V	+ N or CMF	+ N + CMF
420 V < $U_N \leq 500$ V	Standard: $\hat{U}_{LL}$ = 1300 V	+ d*u*/d*t* + (N or CMF)	+ N + d*u*/d*t* + CMF
	or		
	Reinforced: $\hat{U}_{LL}$ = 1600 V, 0.2 microsecond rise time	+ N or CMF	+ N + CMF
500 V < $U_N \leq 600$ V	Reinforced: $\hat{U}_{LL}$ = 1600 V	+ d*u*/d*t* + (N or CMF)	+ d*u*/d*t* + N + CMF
	or		
	Reinforced: $\hat{U}_{LL}$ = 1800 V	+ N or CMF	+ N + CMF
600 V < $U_N \leq 690$ V	Reinforced: $\hat{U}_{LL}$ = 1800 V	+ N + d*u*/d*t*	+ N + d*u*/d*t* + CMF
	Reinforced: $\hat{U}_{LL}$ = 2000 V, 0.3 microsecond rise time ***	N + CMF	N + CMF

*** If the intermediate DC circuit voltage of the drive is increased from the nominal level by resistor braking, check with the motor manufacturer if additional output filters are needed in the applied drive operation range.

Note 5: *HXR and AMA motors*

All AMA machines (manufactured in Helsinki) for drive systems have form-wound windings. All HXR machines manufactured in Helsinki starting 1.1.1998 have form-wound windings.

Note 6: *ABB motors of types other than M2_, M3_, HX_ and AM_*

Use the selection criteria given for non-ABB motors.

Note 7: *Resistor braking of the drive*

When the drive is in braking mode for a large part of its operation time, the intermediate circuit DC voltage of the drive increases, the effect being similar to increasing the supply voltage by up to 20 percent. The voltage increase should be taken into consideration when determining the motor insulation requirement.

Example: Motor insulation requirement for a 400 V application must be selected as if the drive were supplied with 480 V.

Note 8: *Drives with an IGBT supply unit*

If voltage is raised by the drive (this is a parameter selectable function), select the motor insulation system according to the increased intermediate circuit DC voltage level, especially in the 500 V supply voltage range.

Note 9: *Calculating the rise time and the peak line-to-line voltage*

The peak line-to-line voltage at the motor terminals generated by the drive as well as the voltage rise time depend on the cable length. The requirements for the motor insulation system given in the table are “worst case” requirements covering installations with 30 m and longer cables. The rise time can be calculated as follows: $\triangle t = 0.8 \cdot \hat{U}_{LL}/(du/dt)$. Read $\hat{U}_{LL}$ and du/dt from the diagrams below. Multiply the values of the graph by the supply voltage (U_N). In case of drives with an IGBT supply unit or resistor braking, the $\hat{U}_{LL}$ and du/dt values are approximately 20 % higher.

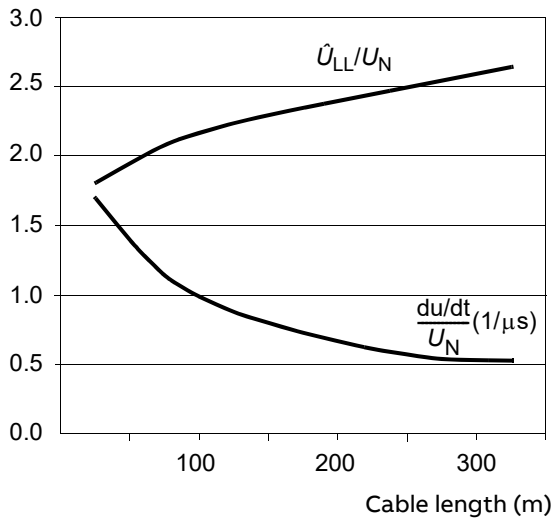

With du/dt Filter

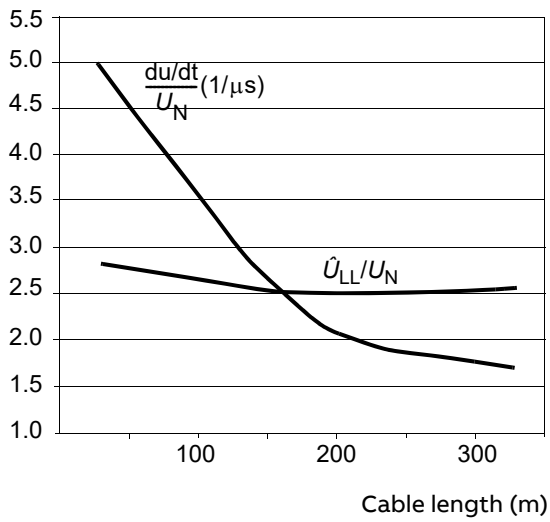

Without du/dt Filter

Note 10: Sine filters protect the motor insulation system. Therefore, du/dt filter can be replaced with a sine filter. The peak phase-to-phase voltage with the sine filter is approximately 1.5 × U_N.

Permanent magnet motor

Only one permanent magnet motor can be connected to the inverter output.

ABB recommends that you install a safety switch between the permanent magnet motor and the drive output. The switch is needed to isolate the motor during any maintenance work on the drive.

Supply connection

Disconnecting device (disconnecting means)

Install a hand-operated input disconnecting device (disconnecting means) between the AC power source and the drive. The disconnecting device must be of a type that can be locked to the open position for installation and maintenance work.

EU

To meet the European Union Directives, according to standard EN 60204-1, Safety of Machinery, the disconnecting device must be one of the following types:

- switch-disconnector of utilization category AC-23B (EN 60947-3)
- disconnector that has an auxiliary contact that in all cases causes switching devices to break the load circuit before the opening of the main contacts of the disconnector (EN 60947-3)
- circuit breaker suitable for isolation in accordance with EN 60947-2.

US

The disconnecting means must conform to the applicable safety regulations.

Fuses

See *Thermal overload and short-circuit protection* (page 53).

Thermal overload and short-circuit protection

Thermal overload protection

The drive protects itself and the input and motor cables against thermal overload when the cables are dimensioned according to the nominal current of the drive. No additional thermal protection devices are needed.

WARNING! If the drive is connected to multiple motors, a separate thermal overload switch or a circuit breaker must be used for protecting each cable and motor. These devices may require a separate fuse to cut off the short-circuit current.

The drive protects the motor cable and motor in a short-circuit situation when the motor cable is dimensioned according to the nominal current of the drive.

Protecting the motor against overload without the thermal model or temperature sensors

Motor overload protection protects the motor against overload without using the motor thermal model or temperature sensors.

Motor overload protection is required and specified by multiple standards including the US National Electric Code (NEC) and the common IEC/UL 61800-5-1 standard in conjunction with IEC/UL 60947-4-1. The standards allow for motor overload protection without external temperature sensors.

The protection feature of the drive allows the user to specify the class of operation in the same manner as the overload relays are specified in standards IEC/UL 60947-4-1 and NEMA ICS 2.

The motor overload protection supports thermal memory retention and speed sensitivity.

For more information, see the drive firmware manual.

Protecting the motor and motor cable in short circuits

The drive protects the motor cable and motor in a short-circuit situation when:

- the motor cable is sized correctly
- the motor cable type complies with the motor cable selection guidelines by ABB
- the cable length does not exceed the allowed maximum length specified for the drive
- the setting of parameter 99.10 Motor nominal power is equal to the value on the motor rating plate.

The electronic power output short-circuit protection circuitry meets the requirements of IEC 60364-4-41 2005/AMD1, Clause 411.

Short-circuit protection

Protect the input cable and drive against short circuits according to the following guide lines.

Circuit diagram	Drive type	Short-circuit protection
DRIVE DOES NOT HAVE INPUT FUSES		
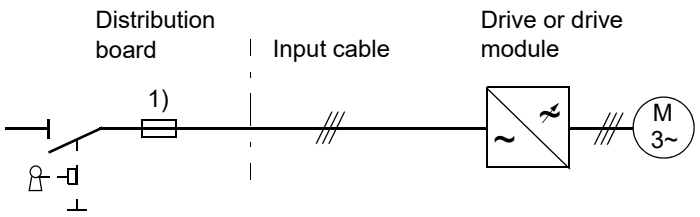	ACS800-11 ACS800-U11	Protect the drive and input cable with fuses. See footnote 1).

1) Size the fuses according to local safety regulations, appropriate input voltage and the rated current of the drive. Only gG and aR fuses are allowed, see *Mains cable fuses* (page 122).

Standard gG fuses (US: CC or T for ACS800-U11) protect the input cable in short-circuit situations, restrict drive damage and prevent damage to adjoining equipment in case of a short circuit in the drive.

Make sure that the operating time of the fuse is below 0.1 seconds. The operating time depends on the fuse type (gG or aR), supply network impedance and the cross-sectional area, material and length of the supply cable. If the 0.1-second operating time is exceeded with gG fuses (US: CC/T/L), ultrarapid (aR) fuses will in most cases reduce the operating time to an acceptable level. The US fuses must be of the “non-time delay” type.

For fuse ratings, see *Technical data* (page 119).

Note: Circuit breakers must not be used.

Ground fault protection

The drive has an internal ground fault protective function to protect the unit against ground faults in the motor and motor cable. This is not a personal safety or a fire protection feature. The ground fault protective function can be disabled with a parameter, refer to the appropriate *ACS800 Firmware Manual*.

The EMC filter of the drive includes capacitors connected between the main circuit and the frame. These capacitors and long motor cables increase the ground leakage current and may cause fault current circuit breakers to function.

Emergency stop devices

For safety reasons, install the emergency stop devices at each operator control station and at other operating stations where emergency stop may be needed.

Note: Pressing the stop key (⊗) on the control panel of the drive does not generate an emergency stop of the motor or separate the drive from dangerous potential.

Prevention of unexpected start-up (option +Q950)

The ACS800-11/U11 can have an optional Prevention of unexpected start-up function according to standards:

- IEC/EN 60204-1:1997
- ISO/DIS 14118:2000
- EN 1037:1996
- EN ISO 12100:2003
- EN 954-1:1996
- EN ISO 13849-2:2003

The Prevention of unexpected start-up (POUS) function disables the control voltage of the power semiconductors, thus preventing the drive from generating the AC voltage required to rotate the motor. By using this function, short-time operations (like cleaning) and/or maintenance work on non-electrical parts of the machinery can be done without switching off the AC power supply to the drive.

The operator activates the Prevention of unexpected start-up function by opening a switch on a control desk. An indicating lamp on the control desk comes on to indicate that the prevention of unexpected start-up is active. The switch can be locked out.

The user must install on a control desk near the machinery:

- switching/disconnecting device for the circuitry. “Means shall be provided to prevent inadvertent, and/or mistaken closure of the disconnecting device.” EN 60204-1:1997.
- indicating lamp: on = starting the drive is prevented, off = drive is operative.

WARNING! The Prevention of unexpected start-up function does not disconnect the voltage of the main and auxiliary circuits from the drive. Therefore maintenance work on electrical parts of the drive or the motor can only be carried out after isolating the drive system from the main supply.

Note: The Prevention of unexpected start-up function is not intended for stopping the drive. If the Prevention of unexpected start-up function is activated when the drive is running, the control voltage of the inverter power semiconductors is cut off and the motor coasts to a stop.

For detailed instructions for installation, start-up, use and maintenance of the function, see *Installation of the AGPS board (Prevention of unexpected start-up, +Q950)* (page 83).

Safe torque off (option +Q967)

The drive supports the Safe torque off (STO) function according to standards:

- EN 61800-5-2:2007
- EN ISO 13849-1:2008
- IEC 61508
- IEC 61511:2004
- EN 62061:2005

The function also corresponds to Prevention of unexpected start-up of EN 1037.

The STO may be used where power removal is required to prevent an unexpected start-up. The function disables the control voltage of the power semiconductors of the drive output stage, thus preventing the drive from generating the voltage required to rotate the motor (see diagram below). By using this function, short-time operations (like cleaning) and/or maintenance work on non-electrical parts of the machinery can be done without switching off the power supply to the drive.

WARNING! The Safe torque off function does not disconnect the voltage of the main and auxiliary circuits from the drive. Therefore maintenance work on electrical parts of the drive or the motor can only be carried out after isolating the drive system from the main supply.

Note: The Safe torque off function can be used for stopping the drive in emergency stop situations. In the normal operating mode, use the Stop command instead. If a running drive is stopped by using the function, the drive trips and coasts to a stop. If this is not acceptable, for example, causes danger, the drive and machinery must be stopped using the appropriate stopping mode before using this function.

Note concerning permanent magnet motor drives in case of a multiple IGBT power semiconductor failure: In spite of the activation of the Safe torque off function, the drive system can produce an alignment torque which maximally rotates the motor shaft by 180/*p* degrees. *p* denotes the pole pair number.

For more information on the installation of the Safe torque off function, see *Installation of the ASTO board (Safe torque off, +Q967)* (page 89).

For more information on the Safe torque off function and the relevant safety data, see *ACS800-01/04/11/31/104/104LC Safe torque off function (+Q967), Application guide* (3AUA0000063373 [English]).

An example circuit diagram is shown below.

Safe torque off circuit diagram

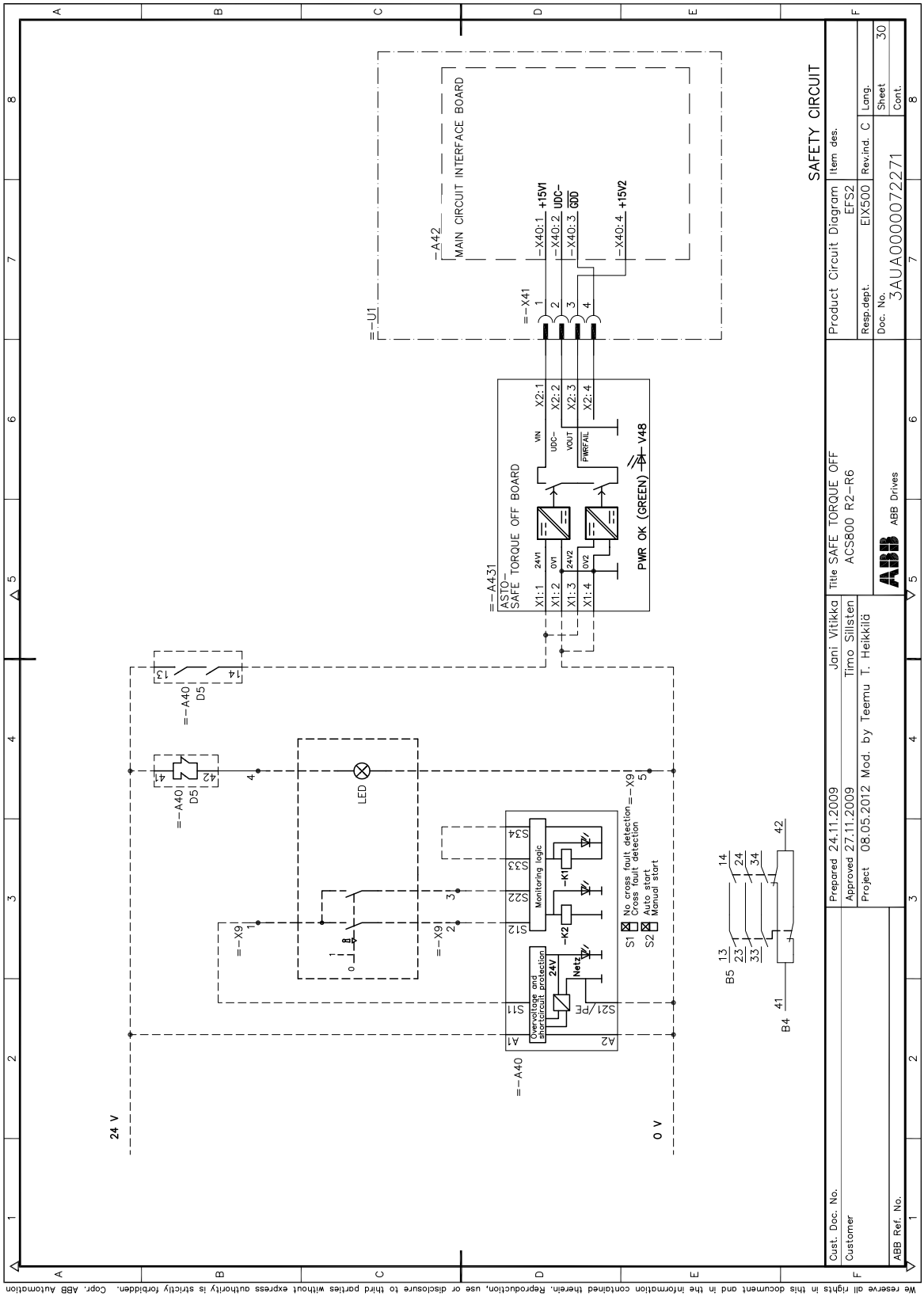

We reserve all rights in this document and in the information contained therein. Reproduction, use or disclosure to third parties without express authority is strictly forbidden. Copyright 2009 ABB Automation.

Selecting the power cables

Dimension the mains (input power) and motor cables according to local regulations:

- The cable must be able to carry the drive load current. For the rated currents, see *Technical data* (page 119).
- The cable must be rated for at least 70 °C (158 °F) maximum permissible temperature of conductor in continuous use. For US, see *Additional US requirements.*
- The inductance and impedance of the PE conductor/cable (grounding wire) must be rated according to the permissible touch voltage appearing under fault conditions (so that the fault point voltage does not increase excessively when a ground fault occurs).
- 600 V AC cable is accepted for up to 500 V AC. 750 V AC cable is accepted for up to 600 V AC. For 690 V AC rated equipment, the rated voltage between the conductors of the cable should be at least 1 kV.

For drive frame size R5 and larger, or motors larger than 30 kW (40 hp), symmetrical shielded motor cable must be used (figure below). A four-conductor system can be used up to frame size R4 with up to 30 kW (40 hp) motors, but shielded symmetrical motor cable is recommended.

WARNING! Do not use unshielded single-core supply cables in IT (ungrounded) networks. A dangerous voltage can become present on the non-conductive outer sheath of the cable. This can cause injury or death.

Note: When continuous conduit is employed, shielded cable is not required.

A four-conductor system is allowed for input cabling, but shielded symmetrical cable is recommended. To operate as a protective conductor, the shield conductivity must be as follows when the protective conductor is made of the same metal as the phase conductors:

Cross-sectional area of the phase conductors **S (mm^2)**	**Minimum cross-sectional area of the corresponding protective conductor** **S_p (mm^2)**
$S \leq 16$	S
$16 < S \leq 35$	16
$35 < S$	S/2

Compared to a four-conductor system, the use of symmetrical shielded cable reduces electromagnetic emission of the whole drive system as well as motor bearing currents and wear.

The motor cable and its PE pigtail (twisted shield) should be kept as short as possible in order to reduce electromagnetic emission.

Longer cables cause a motor voltage decrease which limits the available motor power. The decrease depends on the motor cable length and characteristics. Contact ABB for more information. Note that a sine filter (optional) at the drive output also causes a voltage decrease.

Alternative power cable types

Power cable types that can be used with the drive are represented below.

Recommended

Symmetrical shielded cable: three phase conductors and a concentric or otherwise symmetrically constructed PE conductor, and a shield

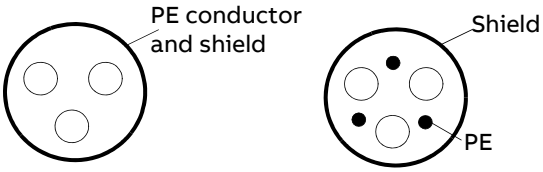

A separate PE conductor is required if the conductivity of the cable shield is < 50 % of the conductivity of the phase conductor.

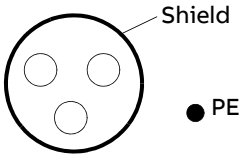

A four-conductor system: three phase conductors and a protective conductor

Not allowed for motor cables

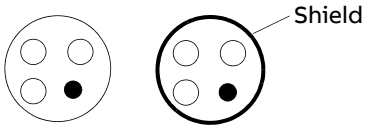

Not allowed for motor cables with phase conductor cross section larger than 10 mm^2 [motors > 30 kW (40 HP)].

The following power cable type is not allowed.

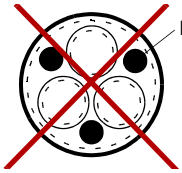	Symmetrical shielded cable with individual shields for each phase conductor is not allowed on any cable size for input and motor cabling.

Motor cable shield

To effectively suppress radiated and conducted radio-frequency emissions, the shield conductivity must be at least 1/10 of the phase conductor conductivity. The requirements are easily met with a copper or aluminum shield. The minimum requirement of the motor cable shield of the drive is shown below. It consists of a concentric layer of copper wires with an open helix of copper tape. The better and tighter the shield, the lower the emission level and bearing currents.

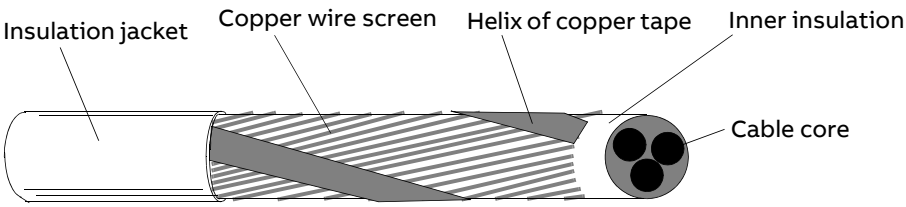

Additional US requirements

Type MC continuous corrugated aluminum armor cable with symmetrical grounds or shielded power cable must be used for the motor cables if metallic conduit is not used. For the North American market, 600 VAC cable is accepted for up to 500 VAC. 1000 VAC cable is required above 500 VAC (below 600 VAC). For drives rated over 100 amperes, the power cables must be rated for 75 °C (167 °F).

Conduit

Where conduits must be coupled together, bridge the joint with a ground conductor bonded to the conduit on each side of the joint. Bond the conduits also to the drive enclosure. Use separate conduits for input power, motor, brake resistor, and control wiring. When conduit is employed, type MC continuous corrugated alumina armor cable or shielded cable is not required. A dedicated ground cable is always required.

Do not run motor wiring from more than one drive in the same conduit.

Armored cable / shielded power cable

Six conductor (3 phases and 3 ground) type MC continuous corrugated aluminum armor cable with symmetrical grounds is available from the following suppliers (trade names in parentheses):

- Anixter Wire & Cable (Philsheath)
- BICC General Corp (Philsheath)
- Rockbestos Co. (Gardex)
- Oaknite (CLX)

Shielded power cables are available from Belden, LAPPKABEL (ÖLFLEX) and Pirelli.

Power factor compensation capacitors

Power factor compensation is not needed with AC drives. However, if a drive is to be connected in a system with compensation capacitors installed, note the following restrictions.

WARNING! Do not connect power factor compensation capacitors to the motor cables (between the drive and the motor). They are not meant to be used with AC drives and can cause permanent damage to the drive or themselves.

If there are power factor compensation capacitors in parallel with the three phase input of the drive:

1. Do not connect a high-power capacitor to the power line while the drive is connected. The connection causes voltage transients that can trip or damage the drive.
2. If capacitor load is increased/decreased step by step when the AC drive is connected to the power line: Ensure that the connection steps are low enough not to cause voltage transients that would trip the drive.
3. Check that the power factor compensation unit is suitable for use in systems with AC drives, that is, harmonic generating loads. In such systems, the compensation unit should typically be equipped with a blocking reactor or harmonic filter.

Equipment connected to the motor cable

Installation of safety switches, contactors, connection boxes, etc.

To minimize the emission level when safety switches, contactors, connection boxes or similar equipment are installed in the motor cable between the drive and the motor:

- EU: Install the equipment in a metal enclosure with 360-degree grounding for the shields of both the incoming and outgoing cable, or connect the shields of the cables otherwise together.
- US: Install the equipment in a metal enclosure in a way that the conduit or motor cable shielding runs consistently without breaks from the drive to the motor.

Bypass connection

WARNING! Never connect the supply power to the drive output terminals U2, V2 and W2. Mains (line) voltage applied to the output can result in permanent damage to the unit. If bypassing is required, employ mechanically or electrically interlocked contactors between the motor and the drive and between the motor and the power line. Make sure with interlocking that the contactors cannot be closed simultaneously. The installation must be clearly marked as defined in IEC/EN 61800-5-1, subclause 6.5.3, for example, “THIS MACHINE STARTS AUTOMATICALLY”.

Using a contactor between the drive and the motor

Implementing the control of the output contactor depends on how you select the drive to operate.

When you have selected to use DTC motor control mode, and motor ramp stop, open the contactor as follows:

1. Give a stop command to the drive.
2. Wait until the drive decelerates the motor to zero speed.
3. Open the contactor.

When you have selected to use DTC motor control mode, and motor coast stop, or scalar control mode, open the contactor as follows:

1. Give a stop command to the drive.
2. Open the contactor.

WARNING! When the DTC motor control mode is in use, never open the output contactor while the drive controls the motor. The DTC motor control operates extremely fast, much faster than it takes for the contactor to open its contacts. When the contactor starts to open while the drive controls the motor, the DTC control tries to maintain the load current by immediately increasing the drive output voltage to the maximum. This can damage, or even burn the contactor completely.

Protecting the relay output contacts and attenuating disturbances in case of inductive loads

Inductive loads (relays, contactors, motors) cause voltage transients when they are switched off.

The relay contacts on the RMIO board are protected with varistors (250 V) against overvoltage peaks. In spite of this, it is highly recommended to equip inductive loads with noise attenuating circuits [varistors, RC filters (AC) or diodes (DC)] in order to minimize the EMC emission at switch-off. If not suppressed, the disturbances may connect capacitively or inductively to other conductors in the control cable and form a risk of malfunction in other parts of the system.

Install the protective component as close to the inductive load as possible. Do not install protective components at the RMIO board terminal block.

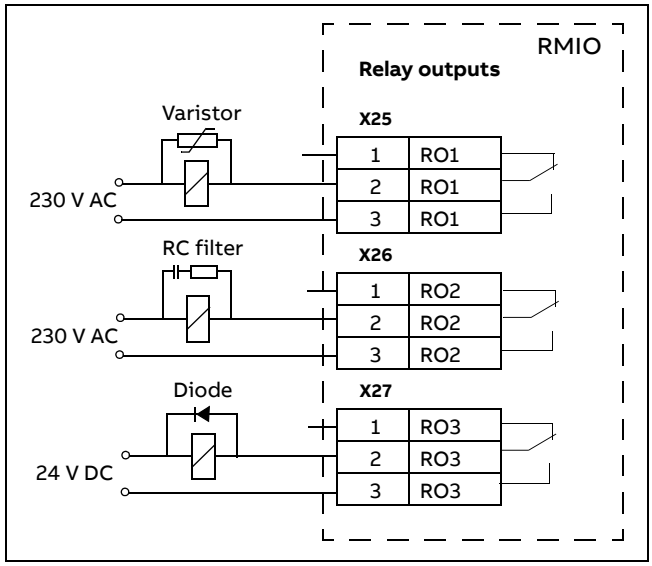

Selecting the control cables

All control cables must be shielded.

Use a double-shielded twisted-pair cable (Figure a) for analogue signals. This type of cable is recommended for the pulse encoder signals also. Employ one individually shielded pair for each signal. Do not use common return for different analogue signals.

A double-shielded twisted-pair cable is the best alternative for low-voltage digital signals but single-shielded twisted-pair cable (Figure b) is also usable.

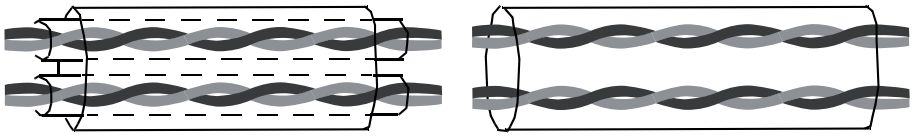

a
A double-shielded twisted-pair cable

b
A single-shielded twisted-pair cable

Run analogue and digital signals in separate, shielded cables.

Relay-controlled signals, providing their voltage does not exceed 48 V, can be run in the same cables as digital input signals. It is recommended that the relay-controlled signals be run as twisted pairs.

Never mix 24 V DC and 115/230 V AC signals in the same cable.

Relay cable

The cable type with braided metallic screen (for example, ÖLFLEX by LAPPKABEL, Germany) was tested and approved by ABB.

Control panel cable

In remote use, the cable connecting the control panel to the drive must not exceed 3 m (10 ft). The cable type tested and approved by ABB is used in control panel option kits.

Connection of a motor temperature sensor to the drive I/O

WARNING! IEC 61800-5-1 requires double or reinforced insulation between live parts when:
• the accessible parts are non-conductive, or

•the accessible parts are conductive, but not connected to the protective earth.

Obey this requirement when you plan the connection of a motor temperature sensor to the drive.

You have these implementation alternatives:

1. If there is double or reinforced insulation between the sensor and the live parts of the motor: You can connect the sensor directly to the analog/digital inputs of the drive. Make sure that the voltage is not more than the maximum allowed voltage over the sensor.
2. If there is basic insulation between the sensor and the live parts of the motor, or if the insulation type is not known: You can connect the sensor to the drive through an option module. The sensor and the module must form a double or reinforced insulation between the motor live parts and the drive control unit. Make sure that the voltage does not exceed the maximum allowed voltage over the sensor.
3. If there is basic insulation between the sensor and the live parts of the motor, or if the insulation type is not known: You can connect a sensor to a digital input of the drive via an external relay. The sensor and the relay must form a double or reinforced insulation between the live parts of the motor and the digital input of the drive. Make sure that the voltage does not exceed the maximum allowed voltage over the sensor.

Installation sites above 2000 m (6562 ft)

WARNING! Protect against direct contact when installing, operating and servicing the RMIO board wiring and optional modules attached to the board. The Protective Extra Low Voltage (PELV) requirements stated in EN 50178 and IEC 61800-5-1 are not fulfilled at altitudes above 2000 m (6562 ft).

Routing the cables

Route the motor cable away from other cable routes. Motor cables of several drives can be run in parallel installed next to each other. It is recommended that the motor cable, input power cable and control cables be installed on separate trays. Avoid long parallel runs of motor cables with other cables in order to decrease electromagnetic interference caused by the rapid changes in the drive output voltage.

Where control cables must cross power cables make sure they are arranged at an angle as near to 90 degrees as possible. Do not run extra cables through the drive.

The cable trays must have good electrical bonding to each other and to the grounding electrodes. Aluminum tray systems can be used to improve local equalizing of potential.

A diagram of the cable routing is shown below.

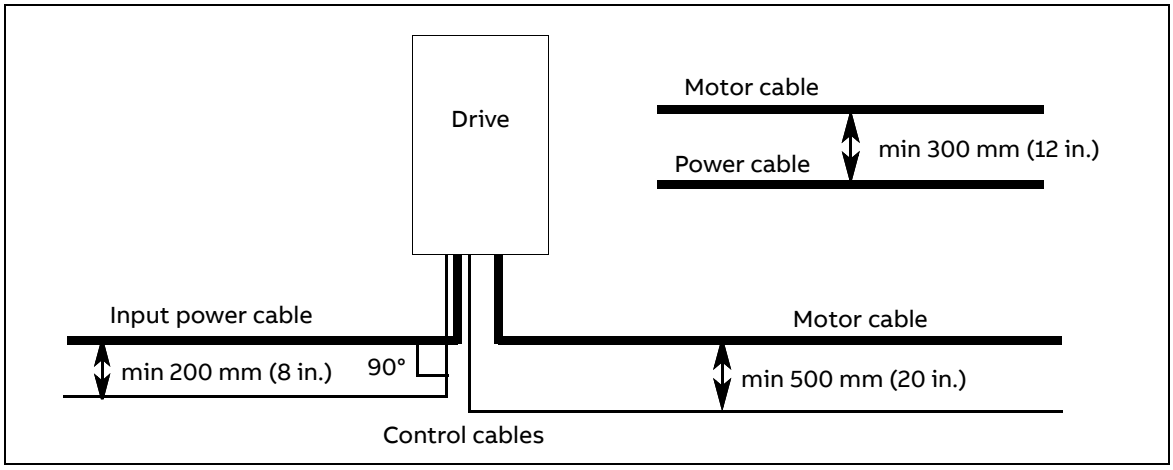

Control cable ducts

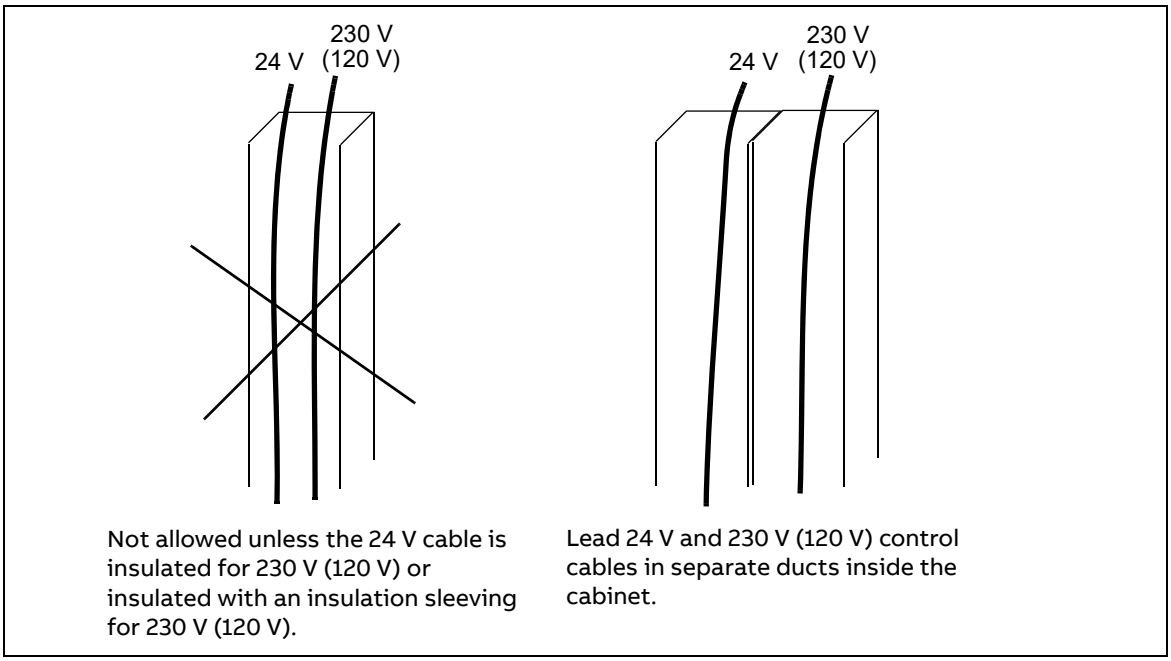

6

Electrical installation

What this chapter contains

This chapter describes the electrical installation procedure of the drive.

WARNING! The work described in this chapter may only be carried out by a qualified electrician. Obey the *Safety instructions* (page 11) in this manual. Ignoring the safety instructions can cause injury or death.

Make sure that the drive is disconnected from the mains (input power) during the installation. If the drive is already connected to the mains, wait for 5 minutes after you disconnect the mains power.

Checking the insulation of the installation

Drive

Do not make any voltage tolerance or insulation resistance tests on any part of the drive as testing can damage the drive. Every drive was tested for insulation between the main circuit and the chassis at the factory. Also, there are voltage-limiting circuits inside the drive which cut down the testing voltage automatically.

Supply cable

Check the insulation of the supply (input) cable according to local regulations before connecting to the drive.

Motor and motor cable

Check the insulation of the motor and motor cable as follows:

1. Check that the motor cable is connected to the motor, and disconnected from the drive output terminals U2, V2 and W2.
2. Measure the insulation resistance between each phase conductor and the Protective Earth conductor using a measuring voltage of 1000 V DC. The insulation resistance of an ABB motor must exceed 100 Mohm (reference value at 25 °C or 77 °F). For the insulation resistance of other motors, please consult the manufacturer's instructions.
   Note: Moisture in the motor casing reduces the insulation resistance. If you suspect moisture, dry the motor and repeat the measurement.

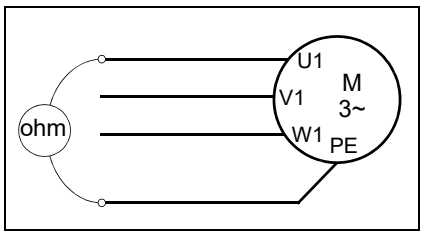

IT (ungrounded) systems

Drives with EMC filter option +E202 or +E200 are not suitable for use in an IT (ungrounded) system as such. Disconnect the EMC filter capacitors before connecting the drive to an ungrounded system as described below.

WARNING! If a drive with an EMC filter +E202 or +E200 is installed on an IT system (an ungrounded power system or a high resistance-grounded [over 30 ohms] power system), the system is connected to earth potential through the EMC filter capacitors of the drive. This can cause danger or damage the unit.

Disconnecting the EMC filter capacitors

Units of frame size R5

Remove the two screws shown below. Depending on the EMC filter type and the nominal voltage of the drive, there may be only one screw.

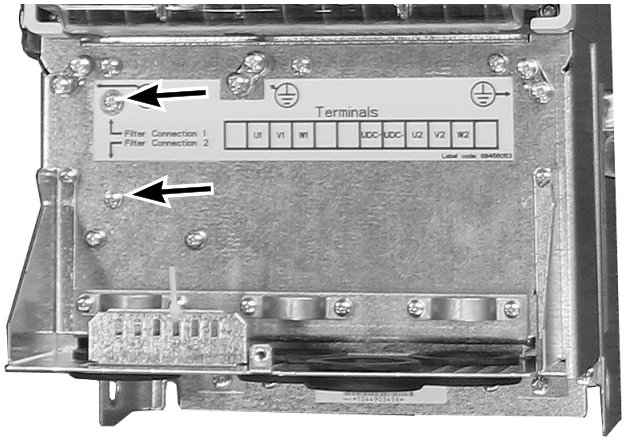

View of frame size R5

Note: When the capacitors of EMC filter +E202 or +E200 are disconnected, the EMC Directive requirements in the second environment are not fulfilled. See *CE marking* (page 132).

Units of frame size R6

Remove the two screws shown below. Depending on the EMC filter type and the nominal voltage of the drive, there may be only one screw.

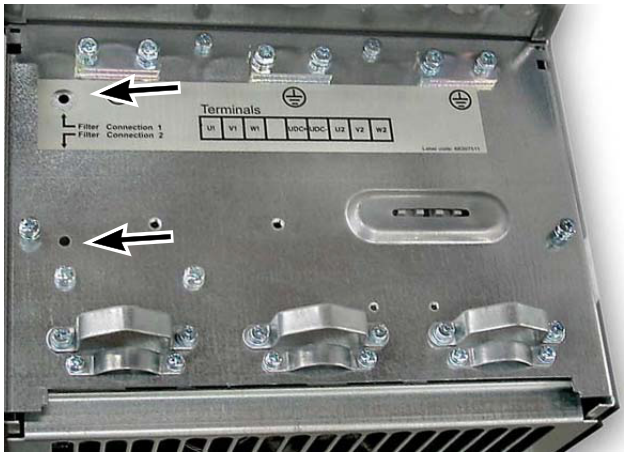

View of frame size R6

Note: When the capacitors of EMC filter +E202 are disconnected, the EMC Directive requirements may not be fulfilled in first environment, but are fulfilled in the second environment.
When the capacitors of EMC filter +E200 are disconnected, the EMC Directive requirements in the second environment are still fulfilled. See *CE marking* (page 132).

Connecting the power cables

Diagram

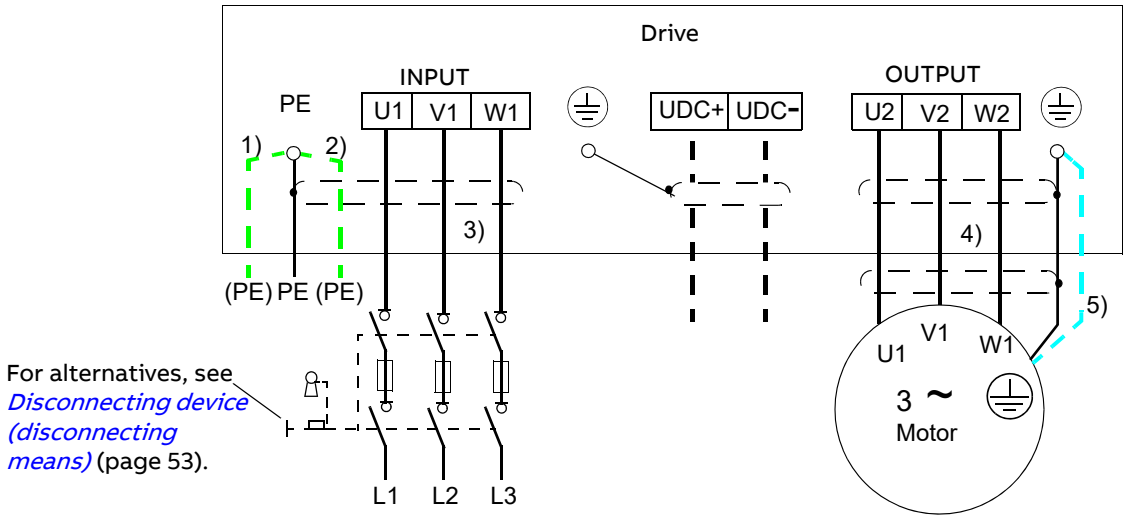

1), 2)

If shielded cable is used (not required, but recommended), use a separate PE cable (1) or a cable with a grounding conductor (2) if the conductivity of the input cable shield is < 50% of the conductivity of the phase conductor.

Ground the other end of the input cable shield or PE conductor at the distribution board.

3) 360-degree grounding recommended if shielded cable is used

4) 360-degree grounding required

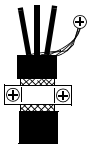

5) Use a separate grounding cable if the conductivity of the cable shield is < 50% of the conductivity of the phase conductor and there is no symmetrically constructed grounding conductor in the cable. See *Selecting the power cables* (page 59).

Note:

If there is a symmetrically constructed grounding conductor in the motor cable in addition to the conductive shield, connect the grounding conductor to the grounding terminal at the drive and motor ends.

Do not use an asymmetrically constructed motor cable for motors > 30 kW (40 hp). Connecting its fourth conductor at the motor end increases bearing currents and causes extra wear.

Grounding of the motor cable shield at the motor end

For minimum radio frequency interference:

- ground the cable shield 360 degrees at the lead-through of the motor terminal box

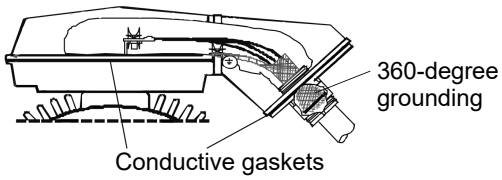

- or ground the cable by twisting the shield as follows: flattened width ≥ 1/5 · length.

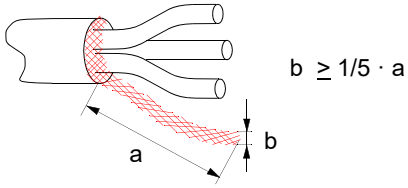

Conductor stripping lengths

Strip the conductor ends as follows to fit them inside the power cable connection terminals.

Frame size	Stripping length	
	mm	in.
R5	16	0.63
R6	28	1.10

Allowed wire sizes, tightening torques

See *Cable entries* (page 124).

Wall installed units (European version)

Power cable installation procedure

1. Remove the connection box cover.
2. Remove the front cover by releasing the retaining clip with a screw driver and lifting the cover from the bottom outwards.
3. Remove the clear plastic shroud of the phase conductor terminals.
4. Cut adequate holes into the rubber grommets and slide the grommets onto the cables. Slide the cables through the holes of the bottom plate.
5. Strip off the outer sheathing of the cables under the 360-degree grounding clamps. Attach the clamps onto the stripped parts of the cables.
6. Tighten the grounding clamps onto the twisted shields of the cables.
7. Connect the phase conductors of the mains cable to the U1, V1 and W1 terminals and the phase conductors of the motor cable to the U2, V2 and W2 terminals.
8. Cut holes to the clear plastic shroud for the conductors in frame size R5 and in cable lug installations of frame size R6.
9. Press the clear plastic shroud onto the phase conductor terminals.
10. Secure the cables outside the unit mechanically.
    Connect the control cables as described in *Connecting the control cables* (page 78).
    Attach the covers, see *Attaching the control cables and covers* (page 81).

Views of frame size R5

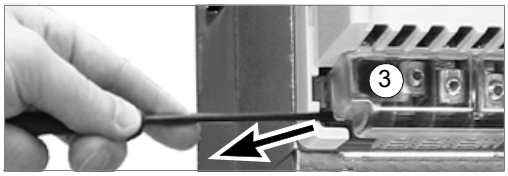

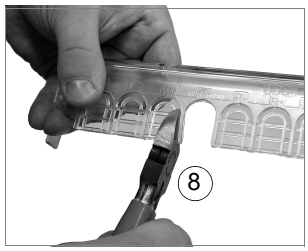

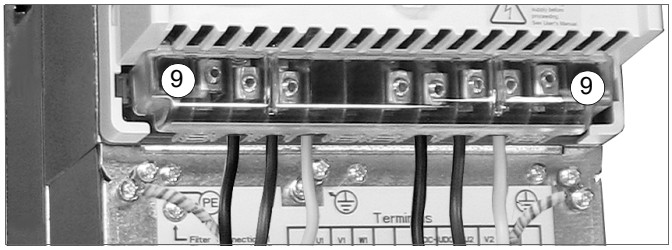

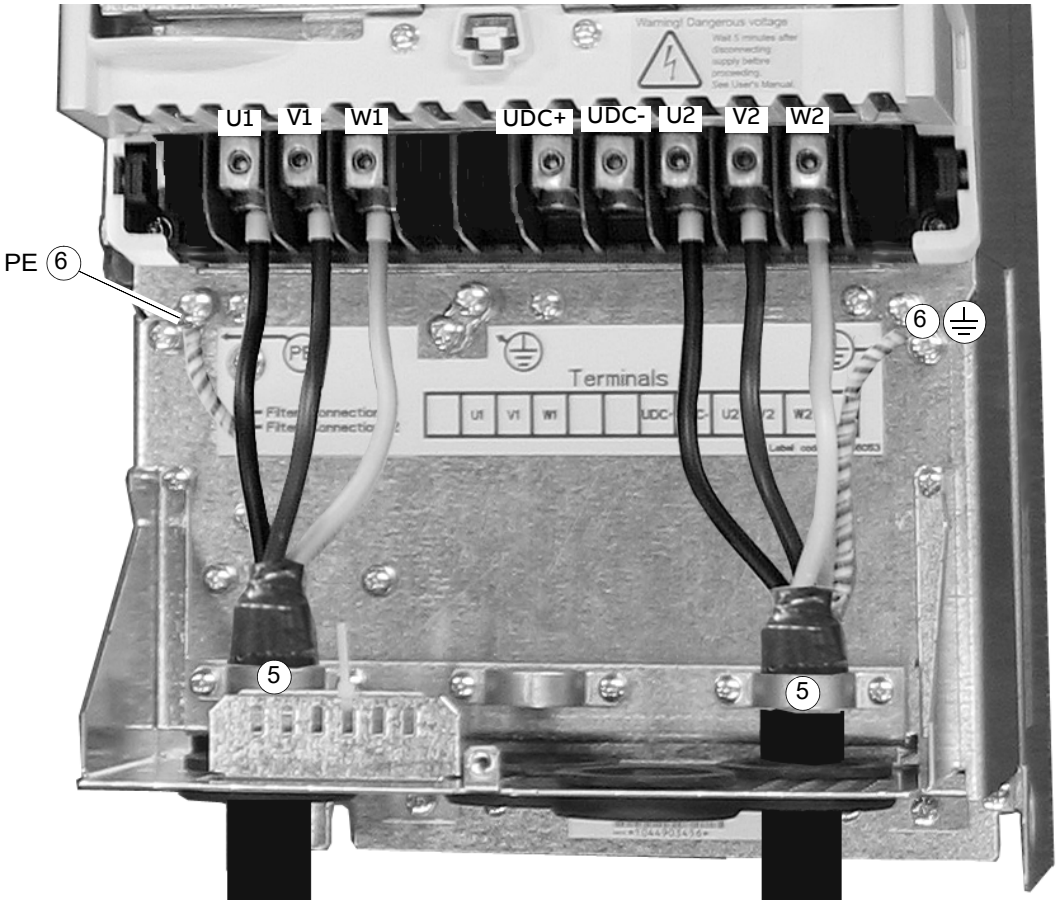

Frame sizes R6: Cable lug installation [16 to 70 mm^2 (6 to 2/0 AWG) cables]

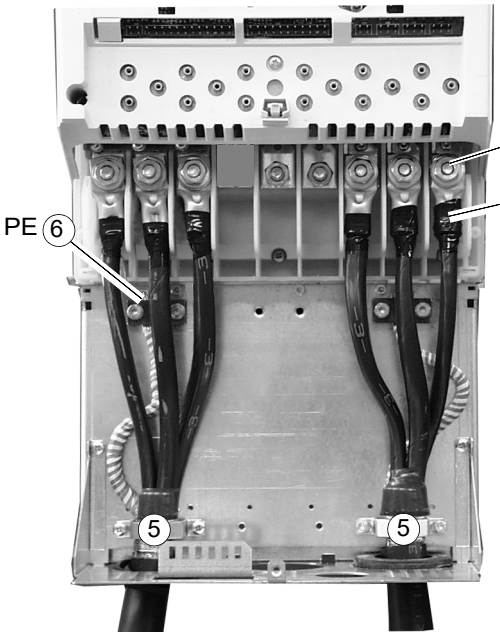

Remove the screw terminals. Attach the cable lugs to the remaining bolts with M10 nuts.

Isolate the ends of the cable lugs with insulating tape or shrink tubing.

Shroud on the conductor terminals (screw terminal installation)

Frame size R6: Screw terminal installation [95 to 210 mm^2 (3/0 to 400 MCM)] cables

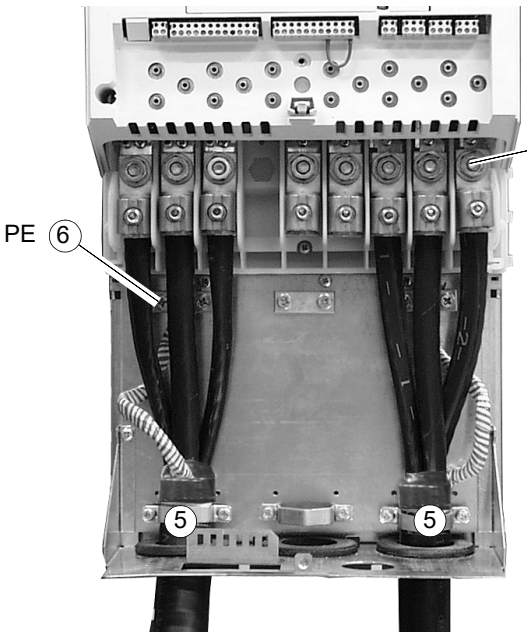

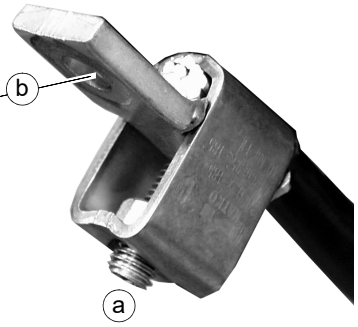

a. Connect the cable to the terminal.

b. Connect the terminal to the drive.

WARNING! If the wire size is less than 95 mm^2 (3/0 AWG), a cable lug must be used. A cable of wire size less than 95 mm^2 (3/0 AWG) connected to this terminal can loosen and may damage the drive.

Wall installed units (US version)

1. Remove the connection box cover.
2. Remove the front cover by releasing the retaining clip with a screw driver and lifting the cover from the bottom outwards.

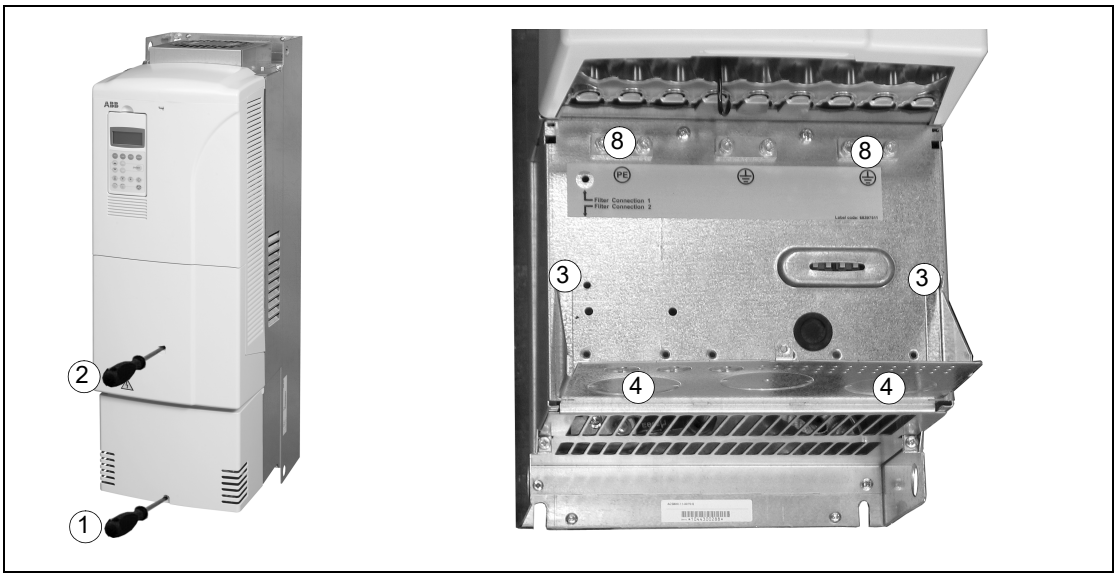

3. Remove the gland plate by opening the screws.
4. Make the cable entry holes in the gland plate by breaking off the suitable knock-out plates with a screw driver.
5. Attach the cable glands to the opened holes of the gland plate.
6. Lead the cables through the glands.
7. Attach the gland plate (3).
8. Connect the grounding conductors of the input and motor cables to the grounding clamps.
9. Remove the clear plastic shroud as shown in *Power cable installation procedure* (page 73).
10. Connect the phase conductors of the input cable to the U1, V1 and W1 terminals and the phase conductors of the motor cable to the U2, V2 and W2 terminals. See *Wall installed units (European version)* (page 73) for cabling figures. In case of a cable lug installation, use UL listed cable lugs and tools given below or corresponding to meet UL requirements.

Wire size	Compression lug		Crimping tool		
kcmil/AWG	Manufacturer	Type	Manufacturer	Type	No. of crimps
4	Burndy	YA4C-L4BOX	Burndy	MY29-3	1
	Ilsco	CCL-4-38	Ilsco	MT-25	1
2	Burndy	YA2C-L4BOX	Burndy	MY29-3	2
	Ilsco	CRC-2	Ilsco	IDT-12	1
	Ilsco	CCL-2-38	Ilsco	MT-25	1
1	Burndy	YA1C-L4BOX	Burndy	MY29-3	2
	Ilsco	CRA-1-38	Ilsco	IDT-12	1
	Ilsco	CCL-1-38	Ilsco	MT-25	1
	Thomas & Betts	54148	Thomas & Betts	TBM-8	3
1/0	Burndy	YA25-L4BOX	Burndy	MY29-3	2
	Ilsco	CRB-0	Ilsco	IDT-12	1
	Ilsco	CCL-1/0-38	Ilsco	MT-25	1
	Thomas & Betts	54109	Thomas & Betts	TBM-8	3
2/0	Burndy	YAL26T38	Burndy	MY29-3	2
	Ilsco	CRA-2/0	Ilsco	IDT-12	1
	Ilsco	CCL-2/0-38	Ilsco	MT-25	1
	Thomas & Betts	54110	Thomas & Betts	TBM-8	3

11. Tighten the clamping nuts of the cable glands.

After connecting the control cables, attach the clear plastic shroud and front covers.

Warning sticker

There are warning stickers in different languages inside the packing box of the drive. Attach a warning sticker in the language of your choice onto the plastic skeleton above the power cable terminals.

Cabinet installed units (IP00, UL type open)

The drive can be installed in a cabinet without the plastic front, top and connection box covers and without the lead-through plate.

Recommendations:

- Ground the cable shield 360 degrees at the cabinet entry. Grounding with the 360-degree grounding clamps at the connection box back plate is then not needed.
- Lead the cable unstripped as close to the terminals as possible. Ground the twisted shields of the power cables under the PE and grounding clamps.

Secure the cables mechanically.

Protect the RMIO board terminals X25 to X27 against contact when input voltage exceeds 50 V AC.

Cover the power cable terminals with the clear plastic shroud as shown in *Power cable installation procedure* (page 73).

Cabinet duct plates can also be used, see *Installing cabinet duct plates (optional)* (page 41).

Connecting the control cables

Lead the cable through the control cable entry (1).

Connect the control cables as described below. Connect the conductors to the appropriate detachable terminals of the RMIO board (refer to *Motor control and I/O board (RMIO)* on page 93). Tighten the screws to secure the connection.

Terminals

View of frame size R6

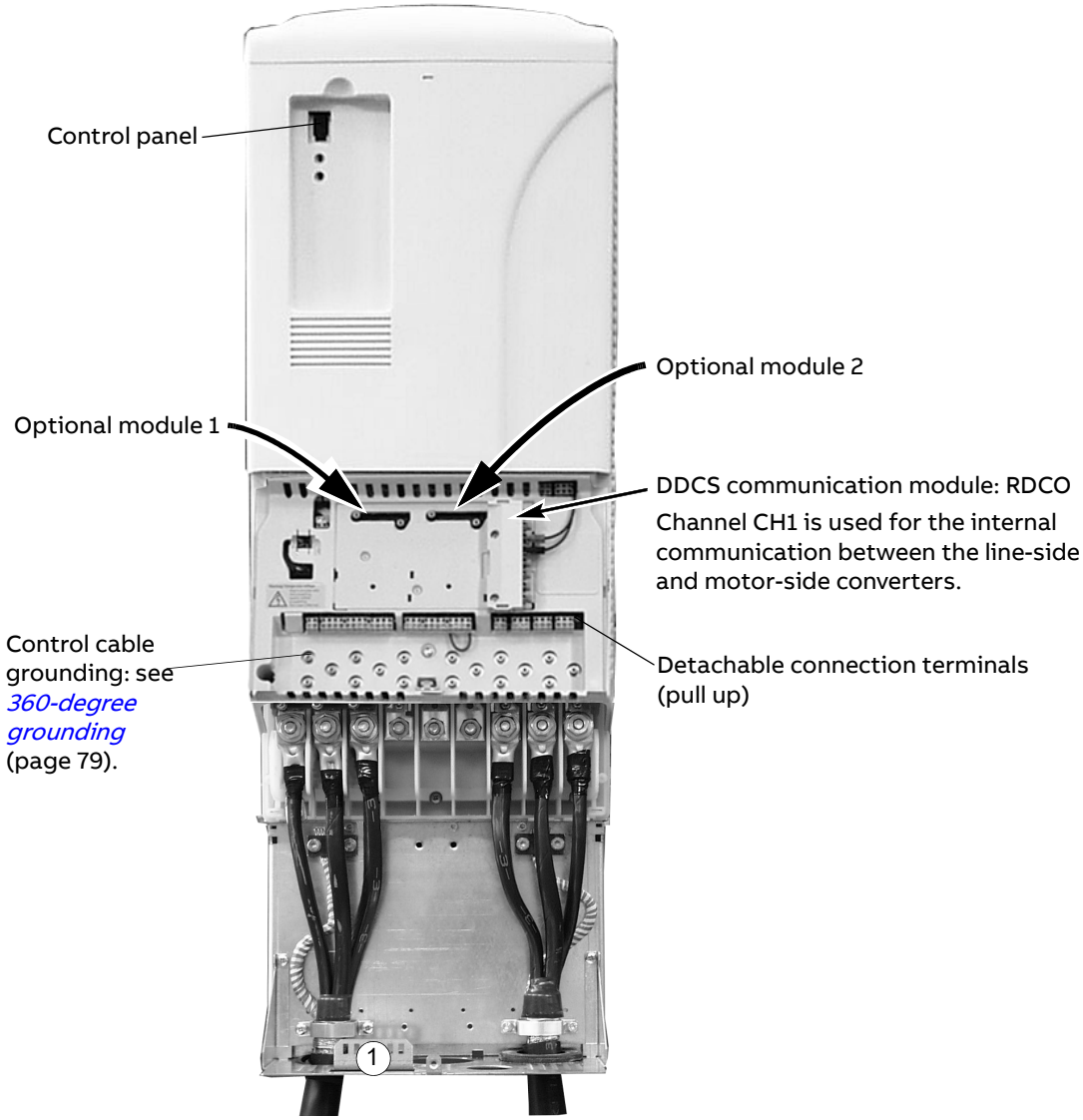

360-degree grounding

Double-shielded cable

Single-shielded cable

When the outer surface of the shield is covered with non-conductive material:

1. Strip the cable carefully (do not cut the grounding wire and the shield)
2. Turn the shield inside out to expose the conductive surface.
3. Wrap the grounding wire around the conductive surface.
4. Slide a conductive clamp onto the conductive part.
5. Attach the clamp to the grounding plate with a screw as close as possible to the terminals where the wires are about to be connected.

Connecting the shield wires

Single-shielded cables: Twist the grounding wires of the outer shield and connect them through the shortest possible route to the nearest grounding hole with a cable lug and a screw.

Double-shielded cables: Connect each pair cable shield (twisted grounding wires) with other pair cable shields of the same cable to the nearest grounding hole with a cable lug and a screw.

Do not connect shields of different cables to the same cable lug and grounding screw.

Leave the other end of the shield unconnected or ground it indirectly via a few nanofarads high-frequency capacitor (for example, 3.3 nF / 630 V). The shield can also be grounded directly at both ends if they are *in the same ground line* with no significant voltage drop between the end points.

Keep the signal wire pairs twisted as close to the terminals as possible. Twisting the wire with its return wire reduces disturbances caused by inductive coupling.

Cabling of I/O and fieldbus modules

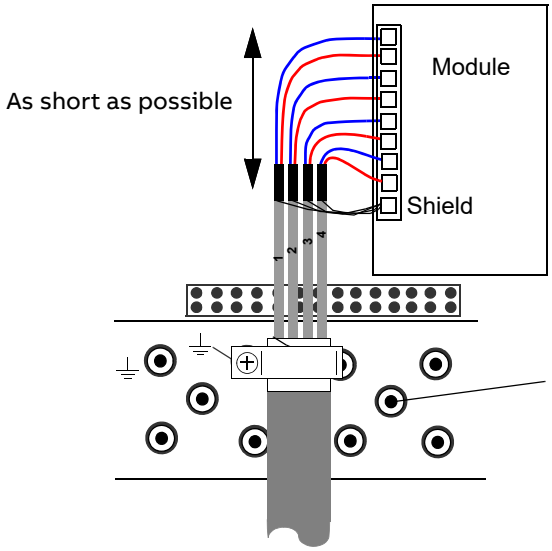

Note: The RDIO module does not include a terminal for cable shield grounding. Ground the pair cable shields here.

Pulse encoder module cabling

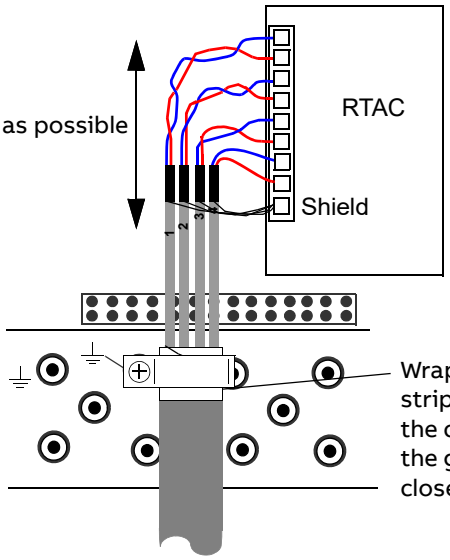

Note 1: If the encoder is of unisolated type, ground the encoder cable at the drive end only. If the encoder is galvanically isolated from the motor shaft and the stator frame, ground the encoder cable shield at the drive and the encoder end.

Note 2: Twist the pair cable wires.

Wrap copper tape around the stripped part of the cable under the clamp. Be careful. Do not cut the grounding wire. Clamp as close to the terminals as possible.

Attaching the control cables and covers

When all control cables are connected, attach them together with cable ties.

Units with a connection box: Attach the cables to the entry plate with cable ties.

Units with a gland box: Tighten the clamping nuts of the cable glands.

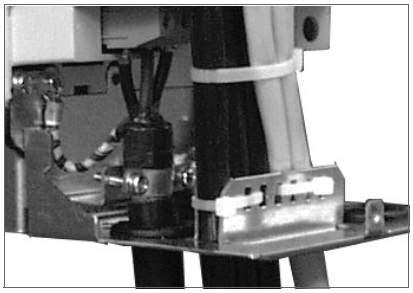

Attach the connection box cover.

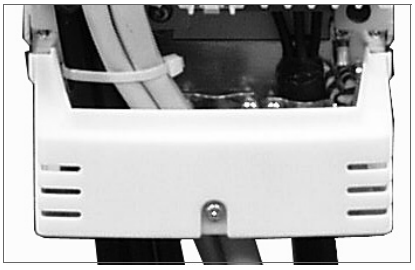

Replace the front cover.

Installation of optional modules and PC

Optional modules (such as fieldbus adapters, I/O extension modules and pulse encoder interface modules) are inserted in the optional module slots of the RMIO board (see *Connecting the control cables* on page 78) and fixed with two screws. See the appropriate optional module manual for the cable connections.

Two RDCO modules are provided for the DDCS fiber-optic link between the RMIO boards of the line-side and motor-side converters. Channel CH0 of the RDCO-03 module in the line-side converter and channel CH1 of the RDCO module in the motor-side converter are used for the internal communication.

The number of optional modules connected to the motor-side RMIO board can be extended by using the AIMA-01 I/O module adapter. The AIMA-01 I/O module adapter is connected to the RMIO board using a fiber-optic link. The line-side and motor-side RMIO boards of the drive are already connected to an internal DDCS ring, which must be customized to connect the AIMA-01 module adapter in the same ring.

In this example, one AIMA-01 I/O module adapter is connected to the RMIO boards of the line-side and motor-side converters.

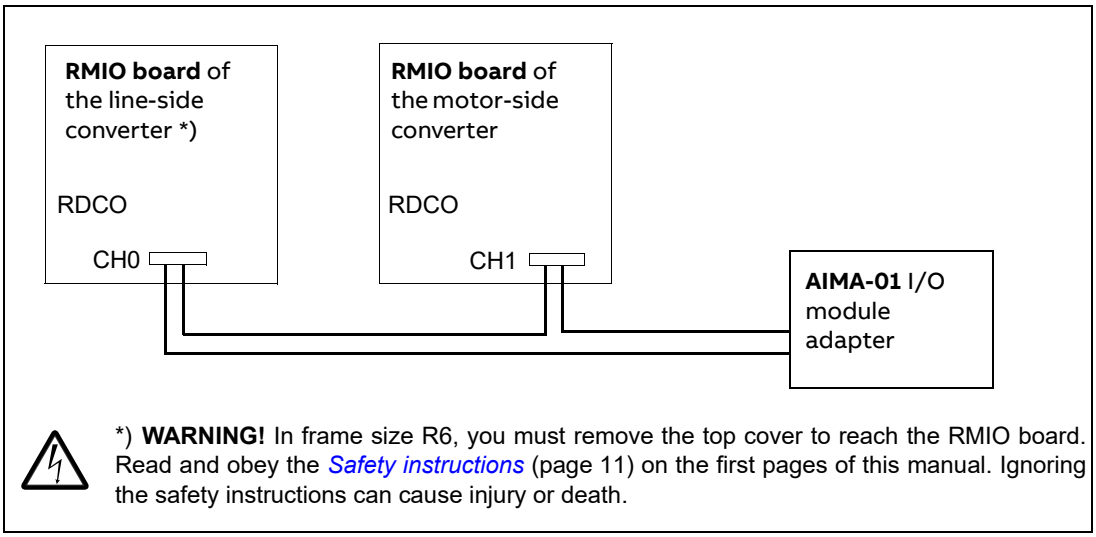

For more information, see *AIMA-01 I/O Module Adapter User's Manual* (3AFE68295351 [English]).

Connecting a PC to the motor-side RMIO board

Connect the PC to channel CH3 of the RDCO module in the motor-side converter using a fiber-optic cable and a suitable adapter.

Make sure that you connect the PC to the correct RMIO board. For the locations of the RMIO boards on the drive, see *Product overview* (page 24).

For more information on the RDCO module, see *RDCO-01/02/03 DDCS Communication Option Modules* (3AFE64492209 [English]).

7

Installation of the AGPS board (Prevention of unexpected start-up, +Q950)

What this chapter contains

This chapter describes the electrical installation of the optional Prevention of unexpected start-up function (+Q950) of the drive.

Prevention of unexpected start-up (+Q950)

The optional Prevention of unexpected start-up function includes an AGPS board which is connected to the drive and an external power supply. See *Prevention of unexpected start-up (option +Q950)* on page 56.

Installation of the AGPS board

WARNING! Dangerous voltages can be present on the AGPS board even when the 115...230 V supply is switched off. Obey the *Safety instructions* (page 11) in this manual and the instructions in this chapter when you do work on the AGPS board.

Make sure that the drive is disconnected from the mains (input power) and the 115...230 V source for the AGPS board is switched off during installation and maintenance. If the drive is already connected to the mains, wait for 5 minutes after you disconnect the mains power.

WARNING! The supply voltage for the AGPS board is 115...230 V AC. If the board is supplied with 24 V DC, the board is damaged and it needs to be replaced.

See

- page 24 for the location of terminal block X41 of the drive.
- page 86 for the circuit diagram.
- page 143 for the dimensions of the AGPS board.
- *AGPS-11C (option +Q950)* (page 129) for the technical data of the board.

Note: Maximum cable length between AGPS terminal block X2 and the drive terminal block is restricted to 10 m (33 ft).

Connect the AGPS board as follows:

1. Remove the enclosure cover by undoing the fixing screws (1).
2. Ground the bottom plate of the enclosure or via terminal X1:1 of the AGPS board.
3. Connect the cable delivered with the kit between terminal block X2 of the AGPS board (2) and drive terminal block X41.

WARNING! Use only the AGPS cable delivered with the kit. Using another cable or modifying the cable may cause a malfunction of the drive and the safety function.

4. Connect a cable between connector X1 of the AGPS board (3) and the 115...230 V source.
5. Attach the enclosure cover with the fixing screws.

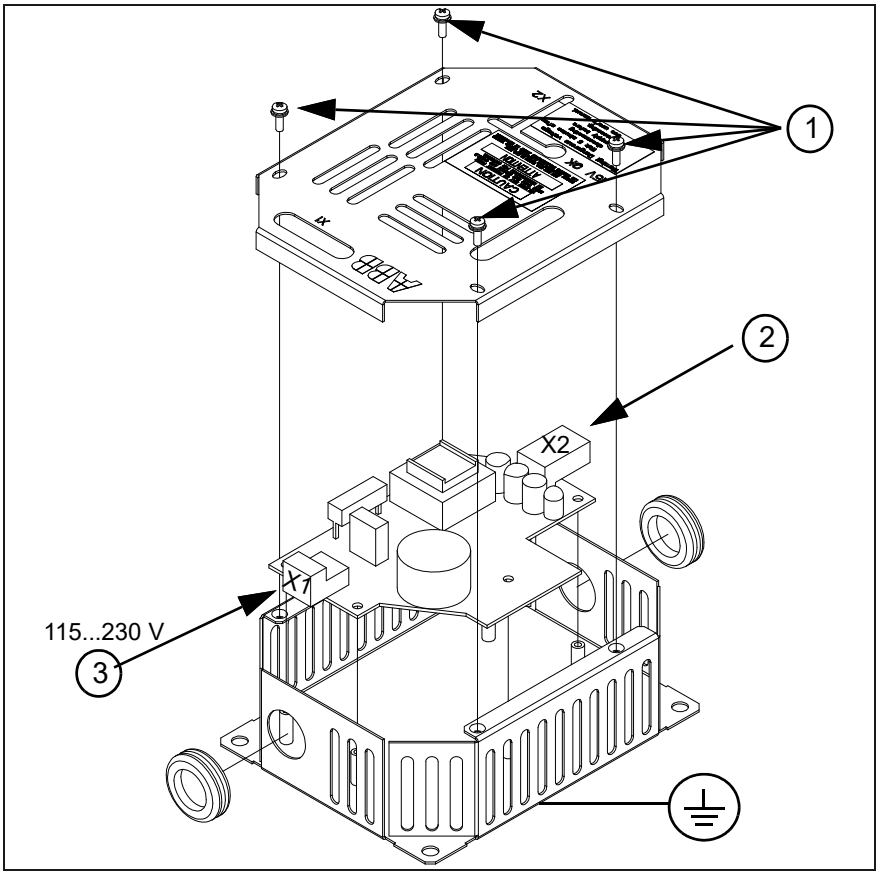

Circuit diagram

This circuit diagram shows how the AGPS-11 kit is installed.

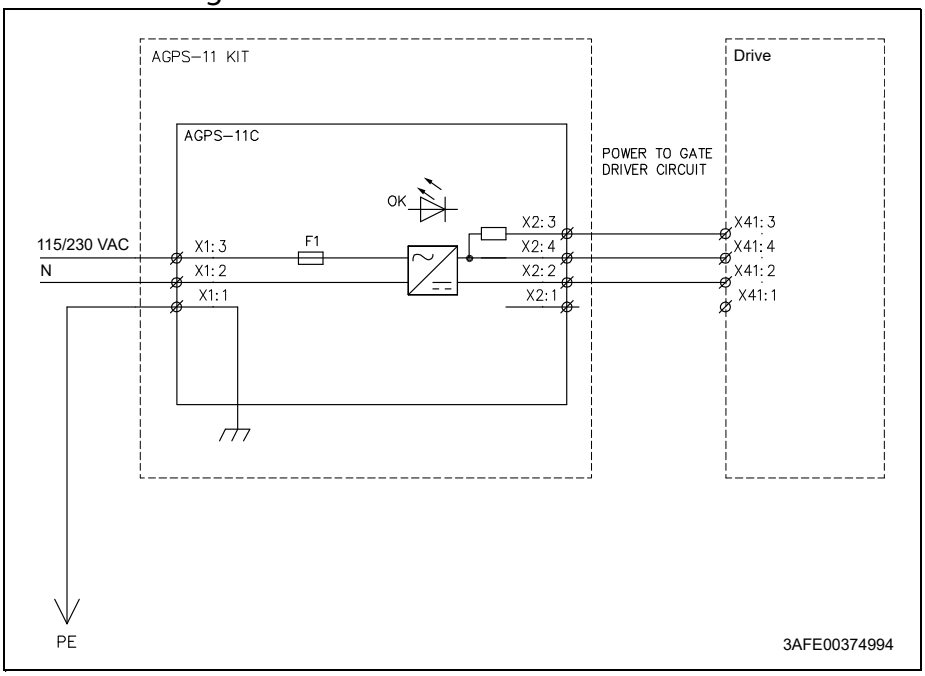

Start-up and validation

	Action
☐	Follow the safety instructions, see *Safety instructions* on page 11.
☐	Make sure that the drive can be run and stopped freely during the start-up.
☐	Stop the drive (if it operates), switch the input power off and isolate the drive from the power line by a disconnector.
☐	Check the Prevention of unexpected start-up circuit connections against the circuit diagram.
☐	Close the disconnector and switch the power on.
☐	Test the operation of the Prevention of unexpected start-up function when the motor is stopped: • Give a stop command for the drive (if running) and wait until the motor shaft is at standstill. • Activate the Prevention of unexpected start-up function and give a start command for the drive. • Make sure that the drive does not start and the motor stays at standstill. • Deactivate the Prevention of unexpected start-up function.

Use

Activate the function as follows:

- Stop the drive. Use the stop key of the panel (local mode) or give the stop command through the I/O or fieldbus interface.
- Open the switch activating the Prevention of unexpected start-up function of the drive. -> The indication lamp (if installed) is lit.
- Lock the switch to the open position.
- Before starting the work on the machinery, ensure that the motor shaft is at standstill (not freely rotating).

Inactivate the function in reverse order.

Maintenance

After the operation of the circuit is validated at start-up, it does not need any maintenance. However, it is a good practice to check the operation of the function when other maintenance routines of the machinery are carried out.

Dimensional drawing

See page 143.

8

Installation of the ASTO board (Safe torque off, +Q967)

What this chapter contains

This chapter describes the electrical installation of the optional Safe torque off function (+Q967) of the drive and the specifications of the board.

Safe torque off (+Q967)

The optional Safe torque off function includes an ASTO board, which is connected to the drive and an external power supply.

For more information on the Safe torque off function, see *Safe torque off (option +Q967)* (page 57) and *ACS800-01/04/11/31/104/104LC Safe torque off function (+Q967), Application guide* (3AUA0000063373 [English]).

Installation of the ASTO board

WARNING! Dangerous voltages can be present at the ASTO board even when the 24 V supply is switched off. Follow the *Safety instructions* on the first pages of this manual and the instruction in this chapter when working on the ASTO board.

Make sure that the drive is disconnected from the mains (input power) and the 24 V source for the ASTO board is switched off during installation and maintenance. If the drive is already connected to the mains, wait for 5 minutes after you disconnect the mains power.

WARNING! The supply voltage for the ASTO-11C board is 24 V DC. If the board is supplied with 230 V AC, the board is damaged and it needs to be replaced.

See

- page 24 for the location of terminal block X41 of the drive.
- page 92 for the circuit diagram.
- page 144 for the dimensions of the ASTO-11C board.
- *ASTO-11C (option +Q967)* (page 129) for the technical data of the ASTO-11C board.

Note: The maximum cable length between ASTO terminal block X2 and the drive terminal block is restricted to 3 m (9.8 ft).

Connect the ASTO board as follows:

1. Remove the cover of the enclosed ASTO unit by undoing the fixing screws (1).
2. Ground the ASTO unit via the bottom plate of the enclosure or via terminal X1:2 or X1:4 of the ASTO board.
3. Connect the cable delivered with the kit between terminal block X2 of the ASTO board (2) and drive terminal block X41.

WARNING! Use only the ASTO cable delivered with the kit. Using another cable or modifying the cable may cause a malfunction of the drive and the safety function.

4. Connect a cable between connector X1 of the ASTO board (3) and the 24 V source.
5. Attach the cover of the ASTO unit back with screws.

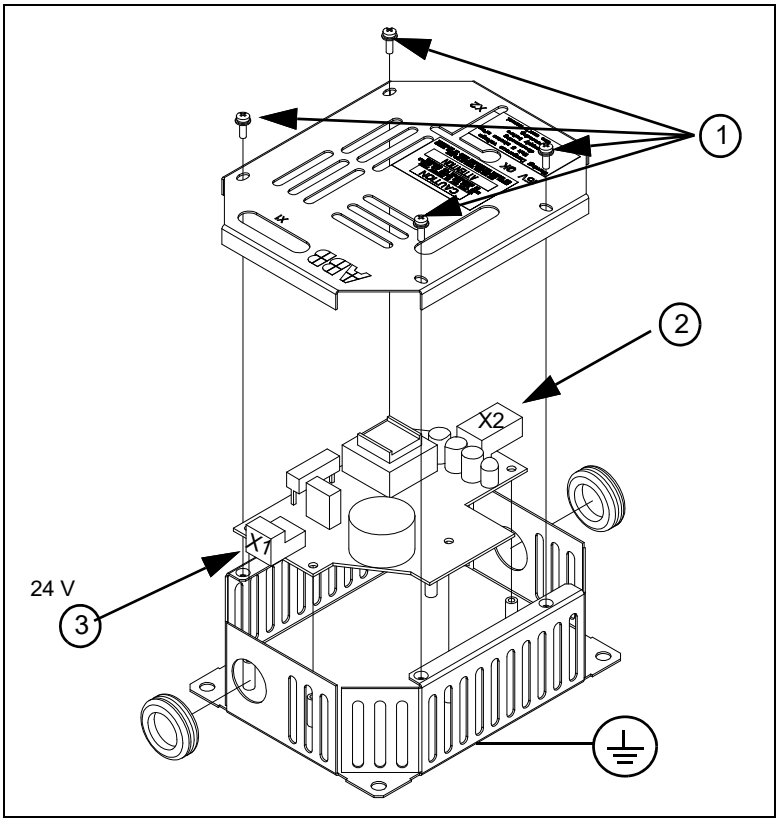

Circuit diagram

The diagram below shows the connection between the ASTO board and the drive when it is ready. For an example diagram of a complete Safe torque off circuit, see page 58.

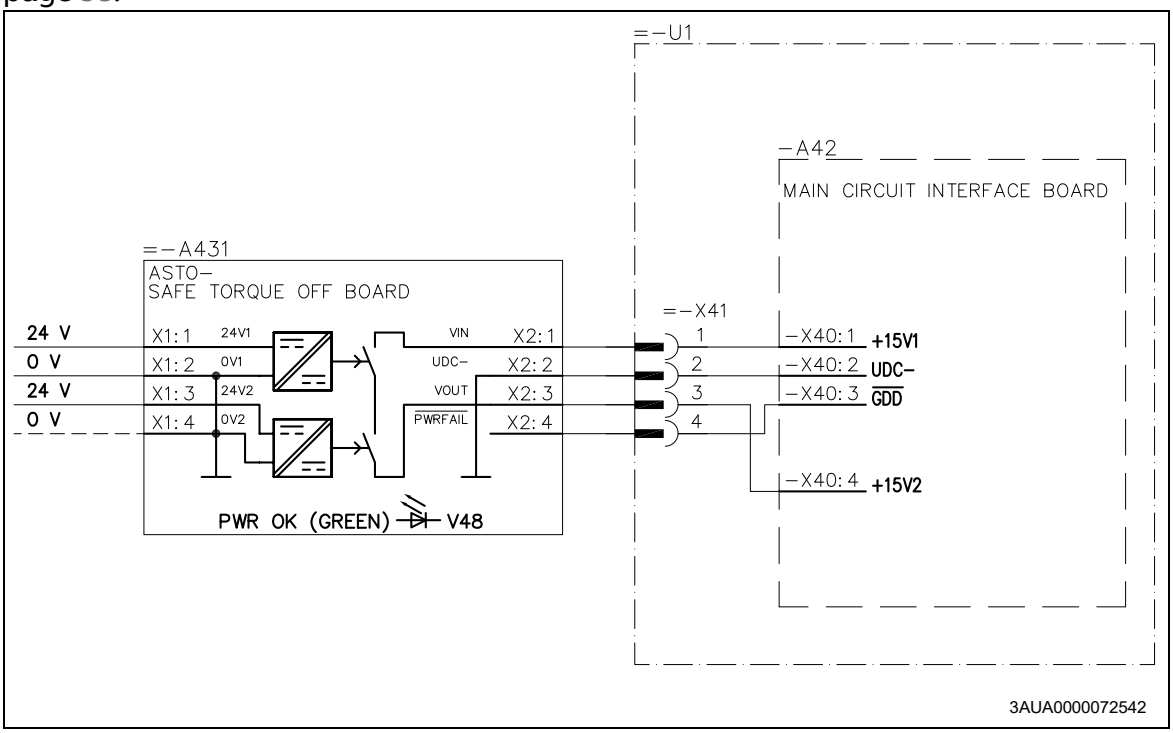

Validation and start-up

Validate and start-up the function according to the instructions given in *ACS800-01/04/11/31/104/104LC Safe torque off function (+Q967), Application guide* (3AUA0000063373 [English]).

Dimensional drawing

See page 144.

9

Motor control and I/O board (RMIO)

What this chapter contains

This chapter shows

- external control connections to the RMIO board for the ACS800 Standard Control Program (Factory Macro)
- specifications of the inputs and outputs of the board.

Note on terminal labelling

Optional modules (Rxxx) may have identical terminal designations with the RMIO board.

Note on external power supply

External +24 V power supply for the RMIO board is recommended if

- the application requires a fast start after connecting the input power supply
- fieldbus communication is required when the input power supply is disconnected.

The RMIO board can be supplied from an external power source via terminal X23 or X34 or via both X23 and X34. The internal power supply to terminal X34 can be left connected when using terminal X23.

WARNING! If the RMIO board is supplied from an external power source via terminal X34, the loose end of the cable removed from the RMIO board terminal must be secured mechanically to a location where it cannot come into contact with electrical parts. If the screw terminal plug of the cable is removed, the wire ends must be individually insulated.

Parameter settings

In Standard Control Program, set parameter 16.9 CTRL BOARD SUPPLY to EXTERNAL 24V if the RMIO board is powered from an external supply.

External control connections (non-US)

External control cable connections to the RMIO board for the ACS800 Standard Control Program (Factory Macro) are shown below. For external control connections of other application macros and programs, see the appropriate *Firmware Manual*.

RMIO

Terminal block size:

cables 0.3 to 2.5 mm^2 (22 to 14 AWG)

Tightening torque:

0.2 to 0.4 N·m (0.2 to 0.3 lbf·ft)

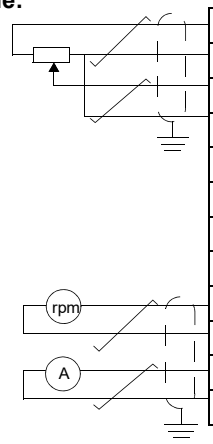

X2*	RMIO		
X20	X20		
1	1	VREF-	Reference voltage -10 VDC, 1 kohm ≤ R_L ≤ 10 kohm
2	2	AGND	
X21	X21		
1	1	VREF+	Reference voltage 10 VDC, 1 kohm ≤ R_L ≤ 10 kohm
2	2	AGND	
3	3	AI1+	Speed reference 0(2) ... 10 V, R_{in} > 200 kohm
4	4	AI1-	
5	5	AI2+	By default, not in use. 0(4) ... 20 mA, R_{in} = 100 ohm
6	6	AI2-	
7	7	AI3+	By default, not in use. 0(4) ... 20 mA, R_{in} = 100 ohm
8	8	AI3-	
9	9	AO1+	Motor speed 0(4)...20 mA ≙ 0...motor nom. speed, R_L ≤ 700 ohm
10	10	AO1-	
11	11	AO2+	Output current 0(4)...20 mA ≙ 0...motor nom. current, R_L ≤ 700 ohm
12	12	AO2-	
X22	X22		
1	1	DI1	Stop/Start
2	2	DI2	Forward/Reverse [1]
3	3	DI3	Not in use
4	4	DI4	Acceleration & deceleration select [2]
5	5	DI5	Constant speed select [3]
6	6	DI6	Constant speed select [3]
7	7	+24VD	+24 VDC max. 100 mA
8	8	+24VD	
9	9	DGND1	Digital ground
10	10	DGND2	Digital ground
11	11	DIIL	Start interlock (0 = stop) [4]
X23	X23		
1	1	+24V	Auxiliary voltage output and input, non-isolated, 24 VDC 250 mA [5]
2	2	GND	
X25	X25		
1	1	RO1	Relay output 1: ready
2	2	RO1	
3	3	RO1	
X26	X26		
1	1	RO2	Relay output 2: running
2	2	RO2	
3	3	RO2	
X27	X27		
1	1	RO3	Relay output 3: fault (-1)
2	2	RO3	
3	3	RO3	

Fault

* optional terminal block in ACS800-02 and ACS800-07

[1] Only effective if par. 10.03 is set to REQUEST by the user.

[2] 0 = open, 1 = closed

DI4	Ramp times according to
0	parameters 22.02 and 22.03
1	parameters 22.04 and 22.05

[3] See par. group 12 CONSTANT SPEEDS.

DI5	DI6	Operation
0	0	Set speed through AI1
1	0	Constant speed 1
0	1	Constant speed 2
1	1	Constant speed 3

[4] See parameter 21.09 START INTRL FUNC.

[5] Total maximum current shared between this output and optional modules installed on the board.

External control connections (US)

External control cable connections to the RMIO board for the ACS800 Standard Control Program (Factory Macro US version) are shown below. For external control connections of other application macros and programs, see the appropriate *Firmware Manual*.

RMIO

Terminal block size:

cables 0.3 to 2.5 mm^2 (22 to 14 AWG)

Tightening torque:

0.2 to 0.4 N·m

(0.2 to 0.3 lbf·ft)

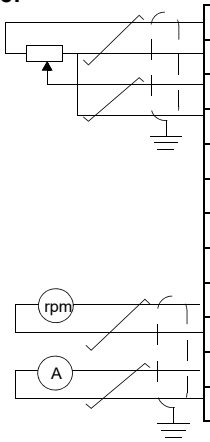

X2*	RMIO		
X20	X20		
1	1	VREF-	Reference voltage -10 VDC, 1 kohm ≤ R_L ≤ 10 kohm
2	2	AGND	
X21	X21		
1	1	VREF+	Reference voltage 10 VDC, 1 kohm ≤ R_L ≤ 10 kohm
2	2	AGND	
3	3	AI1+	Speed reference 0(2) ... 10 V, R_{in} > 200 kohm
4	4	AI1-	
5	5	AI2+	By default, not in use. 0(4) ... 20 mA, R_{in} = 100 ohm
6	6	AI2-	
7	7	AI3+	By default, not in use. 0(4) ... 20 mA, R_{in} = 100 ohm
8	8	AI3-	
9	9	AO1+	Motor speed 0(4)...20 mA ≙ 0...motor nom. speed, R_L ≤ 700 ohm
10	10	AO1-	
11	11	AO2+	Output current 0(4)...20 mA ≙ 0...motor nom. current, R_L ≤ 700 ohm
12	12	AO2-	
X22	X22		
1	1	DI1	Start (⎍)
2	2	DI2	Stop (⎌)
3	3	DI3	Forward/Reverse [1]
4	4	DI4	Acceleration & deceleration select [2]
5	5	DI5	Constant speed select [3]
6	6	DI6	Constant speed select [3]
7	7	+24VD	+24 VDC max. 100 mA
8	8	+24VD	
9	9	DGND1	Digital ground
10	10	DGND2	Digital ground
11	11	DIIL	Start interlock (0 = stop) [4]
X23	X23		
1	1	+24V	Auxiliary voltage output and input, non-isolated, 24 VDC 250 mA [5]
2	2	GND	
X25	X25		
1	1	RO1	Relay output 1: ready
2	2	RO1	
3	3	RO1	
X26	X26		
1	1	RO2	Relay output 2: running
2	2	RO2	
3	3	RO2	
X27	X27		
1	1	RO3	Relay output 3: fault (-1)
2	2	RO3	
3	3	RO3	

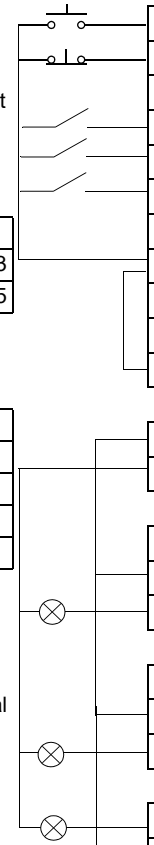

* optional terminal block in ACS800-U2 and ACS800-U7

[1] Only effective if par. 10.03 is set to REQUEST by the user.

[2] 0 = open, 1 = closed

DI4	Ramp times according to
0	parameters 22.02 and 22.03
1	parameters 22.04 and 22.05

[3] See par. group 12 CONSTANT SPEEDS.

DI5	DI6	Operation
0	0	Set speed through AI1
1	0	Constant speed 1
0	1	Constant speed 2
1	1	Constant speed 3

[4] See parameter 21.09 START INTRL FUNC.

[5] Total maximum current shared between this output and optional modules installed on the board.

RMIO board specifications

Analogue inputs

	Two programmable differential current inputs (0 mA / 4 mA ... 20 mA, R_{in} = 100 ohm) and one programmable differential voltage input (-10 V / 0 V / 2 V ... +10 V, R_{in} > 200 kohm). The analogue inputs are galvanically isolated as a group.
Isolation test voltage	500 V AC, 1 min
Max. common mode voltage between the channels	±15 V DC
Common mode rejection ratio	≥ 60 dB at 50 Hz
Resolution	0.025% (12-bit) for the -10 V ... +10 V input. 0.5% (11-bit) for the 0 ... +10 V and 0 ... 20 mA inputs.
Inaccuracy	± 0.5% (Full Scale Range) at 25 °C (77 °F). Temperature coefficient: ± 100 ppm/°C (± 56 ppm/°F), max.

Constant voltage output

Voltage	+10 V DC, 0, -10 V DC ± 0.5% (Full Scale Range) at 25 °C (77 °F). Temperature coefficient: ± 100 ppm/°C (± 56 ppm/°F) max.
Maximum load	10 mA
Applicable potentiometer	1 kohm to 10 kohm

Auxiliary power output

Voltage	24 V DC ± 10%, short circuit proof
Maximum current	250 mA (shared between this output and optional modules installed on the RMIO)

Analogue outputs

	Two programmable current outputs: 0 (4) to 20 mA, R_L ≤ 700 ohm
Resolution	0.1% (10-bit)
Inaccuracy	± 1% (Full Scale Range) at 25 °C (77 °F). Temperature coefficient: ± 200 ppm/°C (± 111 ppm/°F) max.

Digital inputs

	Six programmable digital inputs (common ground: 24 V DC, -15% to +20%) and a start interlock input. Group isolated, can be divided in two isolated groups (see *Isolation and grounding diagram* below). Thermistor input: 5 mA, < 1.5 kohm ≙ “1” (normal temperature), > 4 kohm ≙ “0” (high temperature), open circuit ≙ “0” (high temperature). Internal supply for digital inputs (+24 V DC): short-circuit proof. An external 24 V DC supply can be used instead of the internal supply.
Isolation test voltage	500 V AC, 1 min
Logical thresholds	< 8 V DC ≙ “0”, > 12 V DC ≙ “1”
Input current	DI1 to DI 5: 10 mA, DI6: 5 mA
Filtering time constant	1 ms

Relay outputs

	Three programmable relay outputs
Switching capacity	8 A at 24 V DC or 250 V AC, 0.4 A at 120 V DC
Minimum continuous current	5 mA rms at 24 V DC
Maximum continuous current	2 A rms
Isolation test voltage	4 kV AC, 1 minute

DDCS fiber-optic link

	With optional communication adapter module RDCO. Protocol: DDCS (ABB Distributed Drives Communication System)

24 VDC power input

Voltage	24 V DC ± 10%
Typical current consumption (without optional modules)	250 mA
Maximum current consumption	1200 mA (with optional modules inserted)

The terminals on the RMIO board as well as on the optional modules attachable to the board fulfill the Protective Extra Low Voltage (PELV) requirements stated in EN 50178 provided that the external circuits connected to the terminals also fulfill the requirements and the installation site is below 2000 m (6562 ft). Above 2000 m (6562 ft), see page 66.

Isolation and grounding diagram

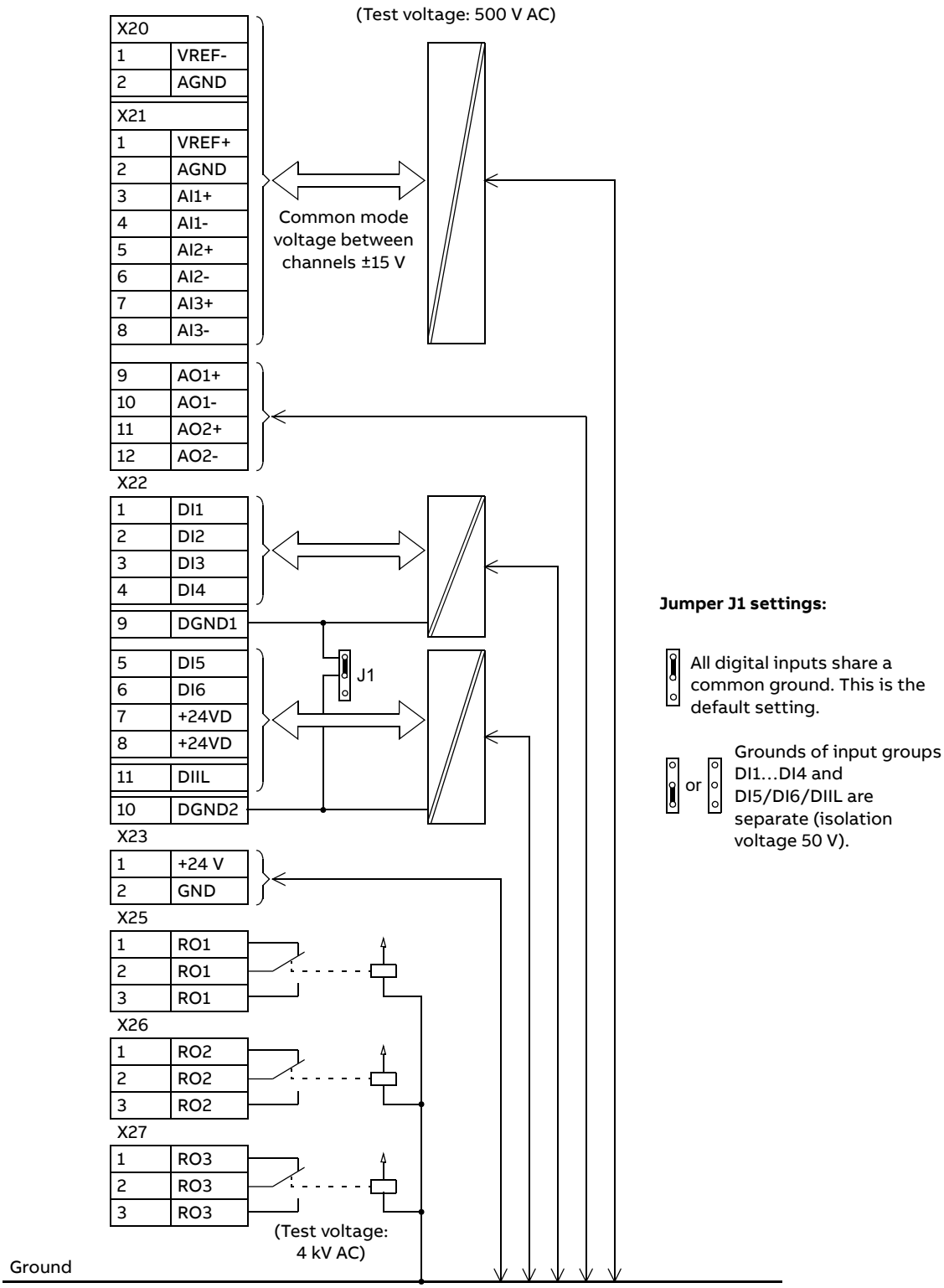

10

Installation checklist

What this chapter contains

This chapter contains an installation checklist.

Checklist

Check the mechanical and electrical installation of the drive before start-up. Go through the checklist below together with another person.

WARNING! Only qualified electricians are allowed to commission the drive. Read and obey the *Safety instructions* (page 11) in this manual. Ignoring the safety instructions can cause injury or death.

Check that...
MECHANICAL INSTALLATION
☐ The ambient operating conditions are allowed. See *Mechanical installation* (page 35), *IEC data* (page 119) or *NEMA data* (page 125).
☐ The unit is fixed properly on a vertical non-flammable wall. See *Mechanical installation* (page 35).
☐ The cooling air will flow freely.
☐ The motor and the driven equipment are ready for start. See *Motor selection and compatibility* (page 46), *Motor connection* (page 128).

Check that...
ELECTRICAL INSTALLATION See *Planning the electrical installation* (page 45), *Electrical installation* (page 69).
☐ The +E202 and +E200 EMC filter capacitors are disconnected if the drive is connected to an IT (ungrounded) system. See *IT (ungrounded) systems* (page 70).
☐ The capacitors are reformed if stored over one year, refer to *Converter modules with electrolytic DC capacitors in the DC link, Capacitor reforming instructions* (3BFE64059629 [English]).
☐ The drive is grounded properly.
☐ The mains (input power) voltage matches the drive nominal input voltage.
☐ The mains (input power) connections at U1, V1 and W1 and their tightening torques are OK.
☐ Appropriate mains (input power) fuses and disconnector are installed.
☐ The motor connections at U2, V2 and W2 and their tightening torques are OK.
☐ The motor cable is routed away from other cables.
☐ There are no power factor compensation capacitors in the motor cable.
☐ The external control connections inside the drive are OK.
☐ There are no tools, foreign objects or dust from drilling inside the drive.
☐ Mains (input power) voltage cannot be applied to the output of the drive (with bypass connection).
☐ Drive, motor connection box and other covers are in place.

11

Start-up and use

What this chapter contains

This chapter describes the start-up procedure and use of the drive, and the control panel control of the line-side and motor-side converters.

Start-up and use

WARNING! Only qualified electricians are allowed to commission the drive. Read and obey the *Safety instructions* (page 11) in this manual. Ignoring the safety instructions can cause injury or death.

Remove the protective film covering the unit.

Do the start-up procedure as described in the appropriate application program firmware manual. The parameters of the line-side converter control program do not need to be set in a normal start-up procedure or in normal use. However, it is recommended to set parameter 16.15 START MODE to LEVEL:

- if the motor is started and stopped frequently. This prolongs the lifespan of the charging contactor.
- when starting the motor without delay after the start command is required.
- If the drive is connected to a common DC bus. Otherwise, the charging resistor may be damaged.

For setting of parameter 16.15 START MODE, change the control panel to control the line-side converter as shown on page 104.

Notes:

- By default, the control panel controls the RMIO board of the motor-side converter (ID number 1). If the control panel is set to control the RMIO board of

the line-side converter (ID number 2), the drive does not stop by pressing the control panel Stop key in local control mode. Have the control panel control the RMIO board of the motor-side converter in normal use.

- Do not change the ID numbers of the converters from the default settings. If the ID numbers of the line-side and motor side converters are set equal, the control panel stops communicating.

Drives with option +Q950: Validate and do the start-up procedure of the Prevention of unexpected start-up function according to instructions given in *Installation of the ASTO board (Safe torque off, +Q967)* (page 89).

Drives with option +Q967: Validate and do the start-up procedure of the Safe torque off function according to instructions given in *ACS800-01/04/11/31/104/104LC Safe torque off function (+Q967), Application guide* (3AUA0000063373 [English]).

Control panel

The has a control panel (type CDP 312R). The CDP 312R is the user interface of the line-side converter and the motor-side converter of the drive, providing the essential controls such as Start/Stop/Direction/Reset/Reference, and the parameter settings for the control programs. More information on using the control panel can be found in the *Firmware Manual* delivered with the drive.

The control panel is wired to both the line-side converter and the motor-side converter using a Y-splitter. The converter that is currently being controlled is indicated by the converter name on the drive display; the suffix “MR” denotes motor-side converter, “LR” denotes line-side converter. The control is switched between the converters as follows:

To control the line-side converter

Step	Action	Push key	Display (example)
1.	Enter the Drive Selection Mode. **Note:** In local control mode, the motor-side converter trips if parameter 30.02 PANEL LOSS is set to FAULT. Refer to the appropriate control program firmware manual.	DRIVE	ACS 800 0050_5MR ASXR7xxx ID-NUMBER 1
2.	Scroll to ID number 2.	▲	ACS 800 0050_5LR IXXR7xxx ID-NUMBER 2
3.	Verify the change to the line-side converter and display the warning or fault text.	ACT	2 -> 380.0 V ACS 800 0050_5LR ** FAULT ** DC OVERVOLT (3210)

WARNING! The drive does not stop by pressing the control panel Stop key in local control mode.

To control the motor-side converter

Step	Action	Push key	Display (example)
1.	Enter the Drive Selection Mode.	DRIVE	ACS 800 0050_5LR IXXR7xxx ID-NUMBER 2
2.	Scroll to ID number 1.	▼	ACS 800 0050_5MR ACXR7xxx ID-NUMBER 1
3.	Verify the change to the motor-side converter.	ACT	1 L -> 0.0 rpm I FREQ 0.00 Hz CURRENT 0.00 A POWER 0.00 %

Removing the control panel

To remove the control panel from the panel holder, press down the locking clip and pull the panel out.

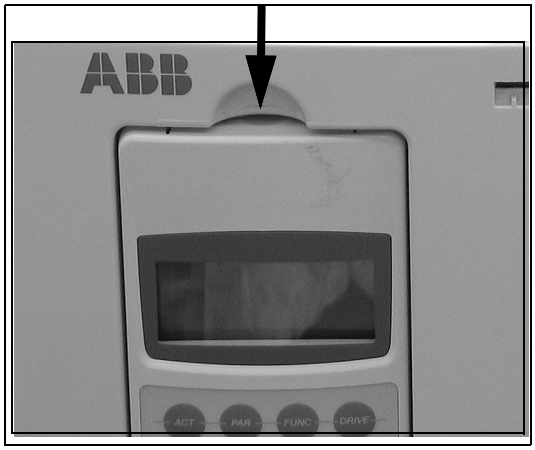

12

Actual signals and parameters

What this chapter contains

This chapter contains listings of parameters specific to the ACS800-11 and ACS800-U11.

Line-side converter actual signals and parameters in the motor-side converter control program

This section describes the actual signals and parameters of the line-side converter control program which are copied to the motor-side converter control program. The user can view two actual signals (by default, measured line current and intermediate circuit DC voltage) and change the values of the copied parameters without changing the control panel between two control boards and programs. In normal use, there is no need to set these or other parameters of the line-side converter control program. For more information on the parameters, refer to *ACS800 IGBT Supply Control Program Firmware Manual* [3AFE68315735 (English)].

Terms and abbreviations

Term	Definition
Actual signal	Signal measured or calculated by the drive. Can be monitored by the user. No user setting possible.
Def.	Default value
FbEq	Fieldbus equivalent: The scaling between the value shown on the control panel and the integer used in serial communication.
Parameter	A user-adjustable operation instruction of the drive.

Actual signals

No.	Name/Value	Description	FbEq	Def.
09 ACTUAL SIGNALS		Signals from the line converter.		
09.12	LCU ACT SIGNAL 1	Line converter signal selected by par. 95.08 LCU PAR1 SEL.	1 = 1	106
09.13	LCU ACT SIGNAL 2	Line converter signal selected by par. 95.09 LCU PAR2 SEL.	1 = 1	110

Parameters

No.	Name/Value	Description	FbEq	Def.
95 HARDWARE SPECIF		Line converter references and actual signal selections.		
95.06	LCU Q POW REF	Reactive power reference for the line converter i.e. the value for par. 24.02 Q POWER REF2 in the IGBT Supply Control Program. Scaling example 1: 10000 equals to a value of 10000 of parameter 24.02 Q POWER REF2 and 100% of par. 24.01 Q POWER REF (i.e. 100% of the converter nominal power given in par. 04.06 CONV NOM POWER) when par. 24.03 Q POWER REF2 SEL is set to PERCENT. Scaling example 2: Par. 24.03 Q POWER REF2 SEL is set to kVAr. A value of 1000 of par. 95.06 equals to 1000 kVAr of par. 24.02 Q POWER REF2. Value of par. 24.01 Q POWER REF is then 100 · (1000 kVAr divided by converter nominal power in kVAr)%. Scaling example 3: Par. 24.03 Q POWER REF2 SEL is set to PHI. A value of 10000 of par. 95.06 equals to a value of 100 deg of parameter 24.02 Q POWER REF2 which is limited to 30 deg. The value of par. 24.01 Q POWER REF will be determined approximately according to the following equation where *P* is read from actual signal 1.06 POWER: $\cos 30 = \frac{P}{S} = \frac{P}{\sqrt{P^2 + Q^2}}$ 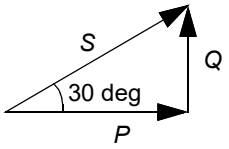 Positive reference 30 deg denotes capacitive load. Negative reference 30 deg denotes inductive load. 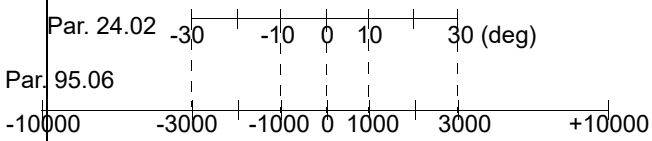 		0
	-10000 ... +10000	Setting range.	1 = 1	
95.07	LCU DC REF (V)	DC voltage reference for line converter i.e. the value for par. 23.01 DC VOLT REF.		0
	0 … 1100	Setting range in volts.	1 = 1 V	
95.08	LCU PAR1 SEL	Selects the line-side converter address from which actual signal 09.12 LCU ACT SIGNAL 1 is read.		106
	0 … 10000	Parameter index.	1 = 1	
95.09	LCU PAR2 SEL	Selects the line-side converter address from which actual signal 09.13 LCU ACT SIGNAL 2 is read.		110
	0 … 10000	Parameter index.	1 = 1	

ACS800-11/U11 specific parameters in the IGBT Supply Control Program

The signals and parameters of the IGBT Supply Control Program which are specific to the ACS800-11 and ACS800-U11 are described in the tables below. These parameters need not be set in a normal start-up. For more information on parameters of the IGBT Supply Control Program, refer to *ACS800 IGBT Supply Control Program Firmware Manual* [3AFE68315735 (English)].

Terms and abbreviations

Term	Definition
B	Boolean data type
C	Character string data type
Def.	Default value data type
FbEq	Fieldbus equivalent: the scaling between the value shown on the control panel and the integer used in serial communication
I	Integer data type
R	Real data type
T.	Data type (see B, C, I, R)

Parameters

No.	Name/Value	Description	T./FbEq	Def.
16 SYSTEM CTR INPUTS		Parameter lock, parameter back-up etc.		
16.15	START MODE	Selects I/O control start mode when par. 98.01 COMMAND SEL is set to I/O.	B	EDGE
	LEVEL	Starts converter by level of control command. Control command is selected by parameter 98.01 COMMAND SEL and 98.02 COMM. MODULE. **WARNING!** After a fault reset, the converter will start if the start signal is on.	0	
	EDGE	Starts converter by EDGE of control command. Control command is selected by parameter 98.01 COMMAND SEL and 98.02 COMM. MODULE.	1	

No.	Name/Value	Description	T./FbEq	Def.
31 AUTOMATIC RESET		Automatic fault reset. Automatic resets are possible only for certain fault types and when the automatic reset function is activated for that fault type. The automatic reset function is not operational if the drive is in local control (L visible on the first row of the control panel display). **WARNING!** If the start command is selected and it is ON, the line converter may restart immediately after automatic fault reset. Ensure that the use of this feature will not cause danger. **WARNING!** Do not use these parameters when the drive is connected to a common DC bus. The charging resistors may be damaged in an automatic reset.		
31.01	NUMBER OF TRIALS	Defines the number of automatic fault resets the drive performs within the time defined by parameter 31.02 TRIAL TIME.	I	0
	0 … 5	Number of the automatic resets	0	
31.02	TRIAL TIME	Defines the time for the automatic fault reset function. See parameter 31.01 NUMBER OF TRIALS.	R	30 s
	1.0 … 180.0 s	Allowed resetting time	100 … 18000	
31.03	DELAY TIME	Defines the time that the drive will wait after a fault before attempting an automatic reset. See parameter 31.01 NUMBER OF TRIALS.	R	0 s
	0.0 … 3.0 s	Resetting delay	0 … 300	
31.04	OVERCURRENT	Activates/deactivates the automatic reset for the line converter overcurrent fault.	B	NO
	NO	Inactive	0	
	YES	Active	65535	
31.05	OVERVOLTAGE	Activates/deactivates the automatic reset for the intermediate link overvoltage fault.	B	NO
	NO	Inactive	0	
	YES	Active	65535	
31.06	UNDERVOLTAGE	Activates/deactivates the automatic reset for the intermediate link undervoltage fault.	B	NO
	NO	Inactive	0	
	YES	Active	65535	

Fixed parameters with the ACS800-11 and ACS800-U11

When the IGBT Supply Control Program is loaded into the ACS800-11 or ACS800-U11, the following parameters are set to the default values given in the table below.

Parameter		Default value	If changed,
11.01	DC REF SELECT	FIELDBUS	the default values will be restored on the next power-up.
11.02	Q REF SELECT	PARAM 24.02	
98.01	COMMAND SEL	MCW. **Note:** If par. 16.15 START MODE is set to LEVEL, the default value is changed to I/O on the next RMIO board power-up.	
98.02	COMM. MODULE	INU COM LIM	
30.02	EARTH FAULT	FAULT. **Note:** The ACS800-11/U11 line converter is not equipped with internal earth fault supervision.	the default values will not be restored on the next power-up. Do not change. If the default values are changed, the drive will not operate.
70.01	CH0 NODE ADDR	120	
70.19	CH0 HW CONNECTION	RING	
70.20	CH3 HW CONNECTION	RING	
71.01	CH0 DRIVEBUS MODE	NO	

13

Maintenance

What this chapter contains

This chapter contains preventive maintenance instructions.

Safety

WARNING! Read and obey the *Safety instructions* (page 11) in this manual before performing any maintenance on the equipment. Ignoring the safety instructions can cause injury or death.

Maintenance intervals

If installed in an appropriate environment, the drive requires very little maintenance. This table lists the routine maintenance intervals recommended by ABB.

Interval	Maintenance	Instruction
Every 6 to 12 months Depends on the dustiness of the environment.	Heatsink temperature check and cleaning	See Heatsink (page 114).
Every year when stored	Capacitor reforming	See Reforming (page 116).
Every 3 years	Change of additional cooling fan	See Additional fan (page 115).
Every 6 years	Main cooling fan change	See Main cooling fan (page 114).
Every 9 years	Capacitor change	See Capacitors (page 116).

Consult your local ABB Service representative for more details on the maintenance. On the Internet, go to http://www.abb.com/drivesservices.

Heatsink

The heatsink fins pick up dust from the cooling air. The drive runs into overtemperature warnings and faults if the heatsink is not clean. In a “normal” environment (not dusty, not clean) the heatsink should be checked annually, in a dusty environment more often.

Clean the heatsink as follows (when it is necessary):

1. Remove the cooling fan (see *Main cooling fan* on page 114).
2. Blow clean compressed air (not humid) from bottom to top and simultaneously use a vacuum cleaner at the air outlet to trap the dust.
   Note: If there is a risk of the dust entering adjoining equipment, do the cleaning in another room.
3. Replace the cooling fan.

Main cooling fan

The lifespan of the cooling fan depends on the drive usage and ambient temperature. See the appropriate ACS800 firmware manual for an actual signal which indicates the hours of usage of the fan. For resetting the running time signal after a fan replacement, please contact ABB.

Fan failure can be predicted by the increasing noise from fan bearings and the gradual rise in the heatsink temperature in spite of heatsink cleaning. If the drive is operated in a critical part of a process, fan replacement is recommended once these symptoms start appearing. Replacement fans are available from ABB. Only use spare parts specified by ABB.

Fan replacement (R5, R6)

1. Loosen the screws of the top plate.
2. Push the top plate backwards.
3. Lift the top plate up.
4. Disconnect the fan supply wires (detachable connector).
5. Lift the fan up.
6. Install the new fan in reverse order.

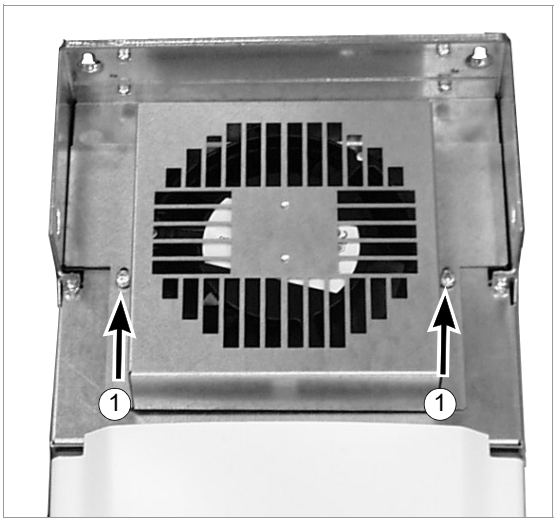

Additional fan

Replacement (R5)

Remove the front cover. The fan is located on the right-hand side of the control panel (R5). Lift the fan out and disconnect the cable. Install the new fan in reverse order.

Replacement (R6)

Remove the top cover by lifting it by the rear edge. To remove the fan, release the retaining clips by pulling the back edge (1) of the fan upwards. Disconnect the cable (2, detachable terminal). Install the new fan in reverse order.

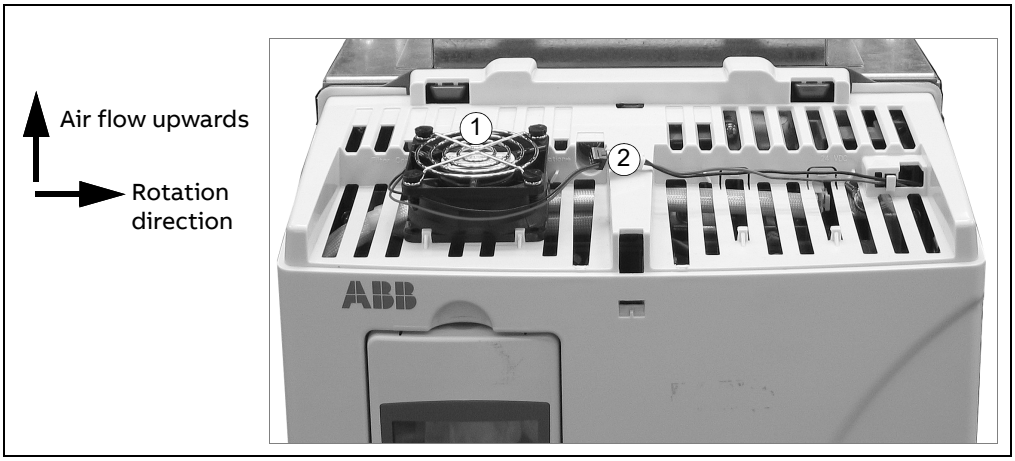

Capacitors

The drive intermediate circuit employs several electrolytic capacitors. The lifespan depends on drive loading and ambient temperature. Capacitor life can be prolonged by lowering the ambient temperature.

It is not possible to predict a capacitor failure. Capacitor failure is usually followed by a mains fuse failure or a fault trip. Contact ABB if capacitor failure is suspected. Replacements are available from ABB. Do not use other than ABB specified spare parts.

Reforming

Reform (re-age) spare part capacitors once a year according to *Converter modules with electrolytic DC capacitors in the DC link, Capacitor reforming instructions* (3BFE64059629 [English]).

14

Fault tracing

What this chapter contains

This chapter describes the fault and warning messages displayed on the control panel and the LEDs of the drive. For a detailed description of the fault and warning messages, see the appropriate firmware manual.

Faults and warnings displayed by the CDP 312R control panel

The control panel displays the Warning and Fault messages of the unit (that is, line-side converter or motor-side converter) the panel is currently controlling.

In addition, the panel indicates the active warnings and faults in the unit that is not currently being controlled. The information between the units is delivered through a separate serial communication channel.

An active warning or fault state in the line-side converter (ID:2) is indicated by flashing messages WARNING, ID:2 or FAULT, ID:2 on the control panel display when the panel is controlling the line-side converter.

```
 FAULT, ID:2
ACS 800 0490_3MR
*** FAULT ***
LINE CONV      (FF51)
```

To display the warning or fault identification text, switch the control panel to view the line-side converter as described in *Control panel* (page 104).

Information on warnings and faults concerning the line-side converter are described in *ACS800 IGBT Supply Control Program Firmware Manual* [3AFE68315735 (English)].

The warnings and faults concerning the motor-side converter are described in the control program (for example, Standard Control Program) *Firmware Manual*.

Conflicting ID numbers

If the ID numbers of the line-side and the motor-side converters are set equal, the control panel stops functioning. To clear the situation:

- Disconnect the panel cable from the RMIO board of the motor-side converter, and connect it to the RMIO board of the line-side converter.
- Set the ID number of the line-side converter RMIO board to 2. For the setting procedure, see the control program (for example, Standard Control Program) *Firmware Manual.*
- Disconnect the panel cable from the line-side converter RMIO board, and reconnect it to the motor-side converter RMIO board.
- Reconnect the panel cable to the RMIO board of the motor-side converter again and set the ID number to 1.

LEDs

This table describes LEDs of the drive.

Where	LED	When the LED is lit
RMIO board *	Red	Drive in fault state
	Green	The power supply on the board is OK.
Control panel mounting platform	Red	Drive in fault state
	Green	The main +24 V power supply for the control panel and the RMIO board is OK.

* The LEDs are not visible

15

Technical data

What this chapter contains

This chapter contains the technical specifications of the drive, for example, the ratings, sizes and technical requirements, provisions for fulfilling the requirements for CE and other markings and warranty policy.

IEC data

Ratings

The IEC ratings for the ACS800-11 with 50 Hz and 60 Hz supplies are given below. The symbols are described below the table.

ACS800-11 type	Nominal ratings		No-overload use	Light-overload use		Heavy-duty use		Frame size	Air flow	Heat dissipation[1]
	$I_{cont.max}$ A	I_{max} A	$P_{cont.max}$ kW	I_{2N} A	P_N kW	I_{2hd} A	P_{hd} kW		m^3/h	W
Three-phase supply voltage 208 V, 220 V, **230 V** or 240 V										
-0011-2	34	52	7.5	32	7.5	26	5.5	R5	350	505
-0016-2	47	68	11	45	11	38	7.5	R5	350	694
-0020-2	59	90	15	56	15	45	11	R5	350	910
-0025-2	75	118	22	69	18.5	59	15	R5	350	1099
-0030-2	88	137	22	83	22	72	18.5	R5	350	1315
-0040-2	120	168	37	114	30	84	22	R6	405	1585
-0050-2	150	234	45	143	45	117	30	R6	405	2125
-0060-2	169	264	45	157	45	132	37	R6	405	2530
Three-phase supply voltage 380 V, **400 V** or 415 V										
-0016-3	34	52	15	32	15	26	11	R5	350	550
-0020-3	38	61	18.5	36	18.5	34	15	R5	350	655
-0025-3	47	68	22	45	22	38	18.5	R5	350	760
-0030-3	59	90	30	56	30	45	22	R5	350	1000
-0040-3	72	118	37	69	37	59	30	R5	350	1210
-0050-3	86	137	45	83	45	65	30	R5	350	1450

ACS800-11 type	Nominal ratings		No-overload use	Light-overload use		Heavy-duty use		Frame size	Air flow	Heat dissipation(1
	$I_{cont.max}$ A	I_{max} A	$P_{cont.max}$ kW	I_{2N} A	P_N kW	I_{2hd} A	P_{hd} kW		m^3/h	W
-0060-3	120	168	55	114	55	88	45	R6	405	1750
-0070-3	150	234	75	143	75	117	55	R6	405	2350
-0100-3	165	264	90	157	75	132	75	R6	405	2800
Three-phase supply voltage 380 V, 400 V, 415 V, 440 V, 460 V, 480 V or **500** V										
-0020-5	31	52	18.5	29	18.5	25	15	R5	350	655
-0025-5	36	61	22	34	22	30	18.5	R5	350	760
-0030-5	47	68	30	45	30	37	22	R5	350	1000
-0040-5	58	90	37	55	37	47	30	R5	350	1210
-0050-5	70	118	45	67	45	57	37	R5	350	1450
-0060-5	82	130	55	78	45	62	37	R5	350	1750
-0070-5	120	168	75	114	75	88	55	R6	405	2350
-0100-5	139	234	90	132	90	114	75	R6	405	2800
-0120-5	156	264	110	148	90	125	75	R6	405	3400
Three-phase supply voltage 525 V, 550 V, 575 V, 600 V, 660 V or **690** V										
-0060-7	57	86	55	54	45	43	37	R6	405	1750
-0070-7	79	120	75	75	55	60	55	R6	405	2350
-0100-7	93	142	90	88	75	71	55	R6	405	2800

00184674

1) These values are not calculated according to the ecodesign standard IEC 61800-9-2.

Symbols

Nominal ratings

$I_{cont.max}$ continuous rms output current. No overload capability at 40 °C (104 °F).

I_{max} maximum output current. Available for 10 s at start, otherwise as long as allowed by drive temperature.

Typical ratings:

No-overload use

$P_{cont.max}$ typical motor power. The power ratings apply to most IEC 60034 motors at the nominal voltage, 230 V, 400 V, 500 V or 690 V.

Light-overload use (10% overload capability)

I_{2N} continuous rms current. 10% overload is allowed for one minute every 5 minutes.

P_N typical motor power. The power ratings apply to most IEC 60034 motors at the nominal voltage, 230 V, 400 V, 500 V or 690 V.

Heavy-duty use (50% overload capability)

I_{2hd} continuous rms current. 50% overload is allowed for one minute every 5 minutes.

P_{hd} typical motor power. The power ratings apply to most IEC 60034 motors at the nominal voltage, 230 V, 400 V, 500 V or 690 V.

Sizing

The current ratings are the same regardless of the supply voltage within one voltage range. To achieve the rated motor power given in the table, the rated current of the drive must be higher than or equal to the rated motor current.

Note 1: The maximum allowed momentary motor shaft power is limited to approximately $1.3 \cdot P_{cont.max}$. If the limit is exceeded, motor torque and current are automatically restricted. The function protects the input bridge and LCL filter of the drive against overload.

Note 2: The ratings apply at an ambient temperature of 40 °C (104 °F). At lower temperatures the ratings are higher (except I_{max}).

Note 3: Use the DriveSize PC tool for a more accurate dimensioning if the ambient temperature is below 40 °C (104 °F) or the drive is loaded cyclically.

Derating

The load capacity (current and power) decreases if the installation site altitude exceeds 1000 m (3300 ft), or if the ambient temperature exceeds 40 °C (104 °F).

Temperature derating

In the temperature range +40 °C (+104 °F) to +50 °C (+122 °F) the rated output current is decreased 1 % for every additional 1 °C (1.8 °F). The output current is calculated by multiplying the current given in the rating table by the derating factor.

Example: If the ambient temperature is 50 °C (+122 °F), the derating factor is 100% - 1 $\frac{\%}{°C}$ · 10 °C = 90 % or 0.90. The output current is then 0.90 · I_{2N} or 0.90 · I_{2hd}.

Altitude derating

In altitudes from 1000 to 4000 m (3300 to 13123 ft) above sea level, the derating is 1% for every 100 m (328 ft). For a more accurate derating, use the DriveSize PC tool.

Mains cable fuses

Fuses for short-circuit protection of the mains cable are listed below. The fuses also protect the adjoining equipment of the drive in case of a short-circuit. Make sure that the operating time of the fuse is below 0.1 seconds. The operating time depends on the supply network impedance and the cross-sectional area and length of the supply cable. See *Planning the electrical installation*: *Thermal overload and short-circuit protection*. For UL recognized fuses, see *NEMA data*.

Note 1: In multi-cable installations, install only one fuse per phase (not one fuse per conductor).

Note 2: Larger fuses must not be used.

Note 3: Fuses from other manufacturers can be used if they meet the ratings.

ACS800-11 type	**Input current**	**Fuse**					
		A	A^2s *	V	Manufacturer	Type	IEC size
Three-phase supply voltage 208 V, 220 V, **230 V** or 240 V							
-0011-2	32	40	9140	500	ABB Control	OFAF000H40	000
-0016-2	44	50	15400	500	ABB Control	OFAF000H50	000
-0020-2	55	63	21300	500	ABB Control	OFAF000H63	000
-0025-2	70	80	34500	500	ABB Control	OFAF000H80	000
-0030-2	82	100	63600	500	ABB Control	OFAF000H100	000
-0040-2	112	125	103000	500	ABB Control	OFAF00H125	00
-0050-2	140	160	200000	500	ABB Control	OFAF00H160	00
-0060-2	157	200	350000	500	ABB Control	OFAF1H200	1
Three-phase supply voltage 380 V, **400 V** or 415 V							
-0016-3	32	40	9140	500	ABB Control	OFAF000H40	000
-0020-3	35	40	9140	500	ABB Control	OFAF000H40	000
-0025-3	44	50	15400	500	ABB Control	OFAF000H50	000
-0030-3	55	63	21300	500	ABB Control	OFAF000H63	000
-0040-3	67	80	34500	500	ABB Control	OFAF000H80	000
-0050-3	80	100	63600	500	ABB Control	OFAF000H100	000
-0060-3	112	125	103000	500	ABB Control	OFAF00H125	00
-0070-3	140	160	200000	500	ABB Control	OFAF00H160	00
-0100-3	153	200	350000	500	ABB Control	OFAF1H200	1
Three-phase supply voltage 380 V, 400 V, 415 V, 440 V, 460 V, 480 V or **500** V							
-0020-5	29	40	9140	500	ABB Control	OFAF000H40	000
-0025-5	33	40	9140	500	ABB Control	OFAF000H40	000
-0030-5	44	50	15400	500	ABB Control	OFAF000H50	000
-0040-5	54	63	21300	500	ABB Control	OFAF000H63	000
-0050-5	65	80	34500	500	ABB Control	OFAF000H80	000
-0060-5	76	100	63600	500	ABB Control	OFAF000H100	000
-0070-5	112	125	103000	500	ABB Control	OFAF00H125	00
-0100-5	129	160	200000	500	ABB Control	OFAF00H160	00
-0120-5	145	200	350000	500	ABB Control	OFAF1H200	1
Three-phase supply voltage 525 V, 550 V, 575 V, 600 V, 660 V or **690** V							
-0060-7	53	63	28600	690	ABB Control	OFAA0GG63	0
-0070-7	73	80	52200	690	ABB Control	OFAA0GG80	0
-0100-7	86	100	93000	690	ABB Control	OFAA1GG100	1

00184674

* maximum total I^2t value for 550 V

aR fuses							
ACS800-11 type	**Input current**	**Fuse**					
		A	A^2s (@660V)	V	Manufacturer	Fuse size	Type DIN 43620
Three-phase supply voltage 208 V, 220 V, **230 V** or 240 V							
-0011-2	32	63	1450	690	Bussmann	000	170M1565
-0016-2	44	80	2550	690	Bussmann	000	170M1566
-0020-2	55	100	4650	690	Bussmann	000	170M1567
-0025-2	70	125	8500	690	Bussmann	000	170M1568
-0030-2	82	125	8500	690	Bussmann	000	170M1568
-0040-2	112	160	7500	690	Bussmann	1*	170M3814
-0050-2	140	200	15000	690	Bussmann	1*	170M3815
-0060-2	157	250	28500	690	Bussmann	1*	170M3816
Three-phase supply voltage 380 V, **400 V** or 415 V							
-0016-3	32	63	1450	690	Bussmann	000	170M1565
-0020-3	35	80	2550	690	Bussmann	000	170M1566
-0025-3	44	80	2550	690	Bussmann	000	170M1566
-0030-3	55	100	4650	690	Bussmann	000	170M1567
-0040-3	67	125	8500	690	Bussmann	000	170M1568
-0050-3	80	125	8500	690	Bussmann	000	170M1568
-0060-3	112	160	7500	690	Bussmann	1*	170M3814
-0070-3	140	200	15000	690	Bussmann	1*	170M3815
-0100-3	153	250	28500	690	Bussmann	1*	170M3816
Three-phase supply voltage 380 V, 400 V, 415 V, 440 V, 460 V, 480 V or **500** V							
-0020-5	29	63	1450	690	Bussmann	000	170M1565
-0025-5	33	80	2550	690	Bussmann	000	170M1566
-0030-5	44	80	2550	690	Bussmann	000	170M1566
-0040-5	54	100	4650	690	Bussmann	000	170M1567
-0050-5	65	125	8500	690	Bussmann	000	170M1568
-0060-5	76	125	8500	690	Bussmann	000	170M1568
-0070-5	112	160	7500	690	Bussmann	1*	170M3814
-0100-5	129	200	15000	690	Bussmann	1*	170M3815
-0120-5	145	250	28500	690	Bussmann	1*	170M3816
Three-phase supply voltage 525 V, 550 V, 575 V, 600 V, 660 V or **690** V							
-0060-7	53	100	4650	690	Bussmann	000	170M1367
-0070-7	73	125	8500	690	Bussmann	000	170M1368
-0100-7	86	160	7500	690	Bussmann	1*	170M3164

00184674

Cable types

The table below gives copper and aluminum cable types for different load currents. Cable sizing is based on max. 9 cables laid on a cable ladder side by side, ambient temperature 30 °C, PVC insulation, surface temperature 70 °C (158 °F) (EN 60204-1 and IEC 60364-5-2/2001). For other conditions, size the cables according to local safety regulations, appropriate input voltage and the load current of the drive.

Copper cables with concentric copper shield		Aluminum cables with concentric copper shield	
Max. load current A	**Cable type** mm^2	**Max. load current** A	**Cable type** mm^2
34	3x6	61	3x25
47	3x10	75	3x35
62	3x16	91	3x50
79	3x25	117	3x70
98	3x35	143	3x95
119	3x50	165	3x120
153	3x70	191	3x150
186	3x95	218	3x185
215	3x120		
249	3x150		
284	3x185		

00096931

Cable entries

Mains, DC link and motor cable terminal sizes (per phase), accepted cable diameters and tightening torques are given below.

Frame size	U1, V1, W1, U2, V2, W2, UDC+,UDC-			Earthing PE	
	Wire size mm^2	**Max. cable Ø IP21** mm	**Tightening torque** N·m	**Wire size** mm^2	**Tightening torque** N·m
R5	6…70	35	10	6…35	15
R6	95...185 *	53	20…40	16...95	8

* with cable lugs 16...70 mm^2, tightening torque 20...40 N·m

Dimensions, weights and noise

Frame size	IP21				Noise
	Height mm	**Width** mm	**Depth** mm	**Weight** kg	dB
Drive					
R5	816	265	390	65	70
R6	970	300	439	100	73
Package					
R5	1085	400	549	5	
R6	1145	400	585	4	

NEMA data

Ratings

The NEMA ratings for the ACS800-U11 and ACS800-11 with 60 Hz supplies are given below. The symbols are described below the table. For sizing, derating and 50 Hz supplies, see *IEC data* (page 119).

ACS800-U11 type ACS800-11 type	I_{max}	Normal use		Heavy-duty use		Frame size	Air flow	Heat dissi-pation(1
		I_{2N}	P_N	I_{2hd}	P_{hd}			
	A	A	hp	A	hp		ft^3/min	BTU/Hr
Three-phase supply voltage 208 V, 220 V, **230 V** or 240 V								
-0011-2	52	32	10	26	7.5	R5	206	1730
-0016-2	68	45	15	38	10	R5	206	2380
-0020-2	90	56	20	45	10	R5	206	3110
-0025-2	118	69	25	59	15	R5	206	3760
-0030-2	137	83	30	72	20	R5	206	4500
-0040-2	168	114	40	84	25	R6	238	5420
-0050-2	234	143	50	117	30	R6	238	7260
-0060-2	264	157	60	132	40	R6	238	8650
Three-phase supply voltage 380 V, 400 V, 415 V, 440 V, **460 V** or 480 V								
-0020-5	52	29	20	25	15	R5	206	2240
-0025-5	61	34	25	30	20	R5	206	2600
-0030-5	68	45	30	37	25	R5	206	3420
-0040-5	90	55	40	47	30	R5	206	4140
-0050-5	118	67	50	57	40	R5	206	4960
-0060-5	130	78	60	62**	50**	R5	206	5980
-0070-5	168	114	75	88	60	R6	238	8030
-0100-5	234	132	100	114	75	R6	238	9570
-0120-5	264	148*	125*	125	100	R6	238	11620
Three-phase supply voltage 525 V, **575 V** or 600 V								
-0060-7	86	54	50	43	40	R6	238	5980
-0070-7	120	75	60	60	50	R6	238	8030
-0100-7	142	88	75	71	60	R6	238	9570

00184674

1) These values are not calculated according to the ecodesign standard IEC 61800-9-2.

* 156 A, motor power ≤ 125 hp and a reactive power reference of 0 allowed with 460 V

** 65 A, motor power ≤ 50 hp and a reactive power reference of 0 allowed with 460 V

Symbols

Nominal ratings

I_{max} maximum output current. Available for 10 s at start, otherwise as long as allowed by drive temperature.

Normal use (10% overload capability)

I_{2N} continuous rms current. 10% overload is typically allowed for one minute every 5 minutes.

P_N typical motor power. The power ratings apply to most 4-pole NEMA rated motors (230 V, 460 V or 575 V).

Heavy-duty use (50% overload capability)

I_{2hd} continuous rms current. 50% overload is typically allowed for one minute every 5 minutes.

P_{hd} typical motor power. The power ratings apply to most 4-pole NEMA rated motors (230 V, 460 V or 575 V).

Note: The ratings apply at an ambient temperature of 40 °C (104 °F). In lower temperatures the ratings are higher (except I_{max}).

Input cable fuses

The ratings of UL listed fuses for branch circuit protection are listed below. The fuses also prevent damage to the adjoining equipment of the drive in case of a short-circuit inside the drive. Make sure that the operating time of the fuse is below 0.1 seconds. The operating time depends on the supply network impedance and the cross-sectional area and length of the supply cable. The fuses must be of the “non-time delay” type. See *Thermal overload and short-circuit protection* (page 53).

Note 1: In multi-cable installations, install only one fuse per phase (not one fuse per conductor).

Note 2: Larger fuses must not be used.

Note 3: Fuses from other manufacturers can be used if they meet the ratings.

ACS800-U11 type **ACS800-11 type**	**Input current**	**Fuse**				
	A	A	V	Manufacturer	Type	UL class
Three-phase supply voltage 208 V, 220 V, **230 V** or 240 V						
-0011-2	32	40	600	Bussmann	JJS-40	T
-0016-2	44	70	600	Bussmann	JJS-70	T
-0020-2	55	80	600	Bussmann	JJS-80	T
-0025-2	70	90	600	Bussmann	JJS-90	T
-0030-2	82	100	600	Bussmann	JJS-100	T
-0040-2	112	150	600	Bussmann	JJS-150	T
-0050-2	140	200	600	Bussmann	JJS-200	T
-0060-2	157	200	600	Bussmann	JJS-200	T
Three-phase supply voltage 380 V, 400 V, 415 V, 440 V, **460 V**, 480 V or 500 V						
-0020-5	29	40	600	Bussmann	JJS-40	T
-0025-5	33	50	600	Bussmann	JJS-50	T
-0030-5	44	70	600	Bussmann	JJS-70	T
-0040-5	54	80	600	Bussmann	JJS-80	T
-0050-5	65	90	600	Bussmann	JJS-90	T
-0060-5	76	100	600	Bussmann	JJS-100	T
-0070-5	112	150	600	Bussmann	JJS-150	T
-0100-5	129	200	600	Bussmann	JJS-200	T
-0120-5	145	200	600	Bussmann	JJS-200	T
Three-phase supply voltage 525 V, **575 V** or 600 V						
-0060-7	53	80	600	Bussmann	JJS-80	T
-0070-7	73	100	600	Bussmann	JJS-100	T
-0100-7	86	125	600	Bussmann	JJS-125	T

00184674

Cable types

Cable sizing is based on NEC Table 310-16 for copper wires, 75 °C (167 °F) wire insulation at 40 °C (104 °F) ambient temperature. Not more than three current-carrying conductors in raceway or cable or earth (directly buried). For other conditions, dimension the cables according to local safety regulations, appropriate input voltage and the load current of the drive.

Copper cables with concentric copper shield	
Max. load current A	**Cable type** AWG/kcmil
31	10
44	8
57	6
75	4
88	3
101	2
114	1
132	1/0
154	2/0
176	3/0
202	4/0
224	250 MCM or 2 x 1
251	300 MCM or 2 x 1/0
273	350 MCM or 2 x 2/0

00096931

Cable Entries

Input, DC link and motor cable (per phase) terminal sizes, accepted cable diameters and tightening torques are given below.

Frame size	**U1, V1, W1, U2, V2, W2, UDC+, UDC-**			**Grounding PE**	
	Wire size AWG	**Wire Ø (UL type 1)** in.	**Tightening torque** lbf·ft	**Wire size** AWG	**Tightening torque** lbf·ft
R5	4...2/0	1.39	11.1	4...2/0	11.1
R6	3/0 ... 350 MCM *	2.09	14.8...29.5	4/0	5.9

* with cable lugs 6...2/0 AWG, tightening torque 14.8...29.5 lbf·ft

Dimensions and weights

Frame size	**UL type 1**				**Noise**
	Height in.	**Width** in.	**Depth** in.	**Weight** lb	dB
Drive					
R5	32.03	10.43	15.35	143	70
R6	38.19	11.81	17.28	220	73
Package					
R5	42.72	15.75	21.61	11	
R6	45.08	15.75	23.03	9	

Input power connection

Voltage (U_1)	208/220/230/240 V AC 3-phase ± 10% for 230 V AC units 380/400/415 V AC 3-phase ± 10% for 400 V AC units 380/400/415/440/460/480/500 V AC 3-phase ± 10% for 500 V AC units 525/550/575/600/660/690 V AC 3-phase ± 10% for 690 V AC units The output voltage can be raised with setting of parameter 23.01 DC VOLT REF. Example: With 400 V supply voltage and 700 V DC intermediate DC circuit voltage, it is possible to run a 500 V motor at the motor nominal voltage.

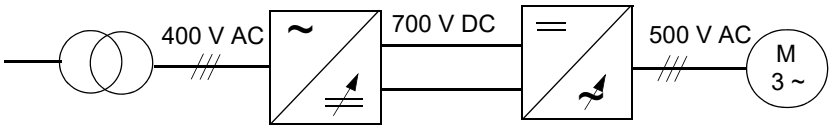

Prospective short-circuit current (IEC 60439-1, UL 508C)	Maximum allowed prospective short-circuit current in the supply is 65 kA in a second providing that the mains cable of the drive is protected with appropriate fuses. US and Canada: The drive is suitable for use on a circuit capable of delivering not more than 65 kA rms symmetrical amperes at the drive nominal voltage when protected by T class fuses.
Frequency	48 to 63 Hz, maximum rate of change 17%/s
Imbalance	Max. ± 3% of nominal phase to phase input voltage
Voltage dips	Max. 25%
Fundamental power factor (cos phi$_1$)	1.00 (fundamental at nominal load)
Harmonic distortion	THD current < 0.05 · $I_{1cont.max}$ if supply network voltage is not distorted by other loads and when the drive operates at the nominal load.

Motor connection

Voltage (U_2)	0 to U_1, 3-phase symmetrical, U_{max} at the field weakening point
Frequency	DTC mode: 0 to 3.2 · f_{FWP}. Maximum frequency 300 Hz. $f_{FWP} = \frac{U_{Nmains}}{U_{Nmotor}} \cdot f_{Nmotor}$ f_{FWP}: frequency at field weakening point; U_{Nmains}: mains (input power) voltage U_{Nmotor}: rated motor voltage; f_{Nmotor}: rated motor frequency
Frequency resolution	0.01 Hz
Current	See *IEC data* (page 119) or *NEMA data* (page 125).
Power limit	Approximately 1.3 · $P_{cont.max}$
Field weakening point	8 to 300 Hz
Switching frequency	3 kHz (average)
Maximum recommended motor cable length	300 m (984 ft). Additional restriction for units with EMC filtering (type code selections +E202 and +E200): max. motor cable length is 100 m (328 ft). With longer cables the EMC Directive requirements may not be fulfilled.

Efficiency

Approximately 97% at nominal power level
The efficiency is not calculated according to the ecodesign standard IEC 61800-9-2.

Energy efficiency data (ecodesign)

Energy efficiency data according to IEC 61800-9-2 is available from the ecodesign tool (https://ecodesign.drivesmotors.abb.com).

Cooling

Method	Internal fan, flow direction from bottom to top.
Free space around the unit	See *Mechanical installation* (page 35).

Degree of protection

IP21 (UL type 1). IPXXD from above.

Without the front cover, the unit must be protected against contact according to IP2x, see *Cabinet installed units (IP00, UL type open)* (page 77).

AGPS-11C (option +Q950)

Nominal input voltage	115...230 V AC ±10%
Nominal input current	0.1 A (230 V) / 0.2 A (115 V)
Nominal frequency	50/60 Hz
Max. external fuse	16 A
X1 terminal sizes	3 x 2.5 mm^2
Output voltage	15 V DC ±0.5 V
Nominal output current	0.4 A
X2 terminal block type	JST B4P-VH
Ambient temperature	0...50 °C (32...122 °F)
Relative humidity	Max. 90%, no condensation allowed
Dimensions (with enclosure)	167 x 128 x 52 mm (height x weight x depth)
Weight (with enclosure)	0.75 kg (1.65 lb)
Approvals	C-UL, US listed

ASTO-11C (option +Q967)

Supply voltage range	+24 V DC +/- 10%
Current consumption	40 mA (20 mA per channel)
Supply cable	A single-shielded twisted pair
Maximum cable length	300 m
Conductor min. cross section	0.5 mm^2, 20 AWG
X1 terminal sizes	4 x 2.5 mm^2
Nominal output current	0.4 A
X2 terminal block type	JST B4P-VH
Ambient temperature	0...50 °C (32...122 °F)
Relative humidity	Max. 90%, no condensation allowed
Altitude in operation	0…2000 m (6562 ft)
Dimensions (with enclosure)	167 x 128 x 52 mm (height x weight x depth)
Weight (with enclosure)	0.75 kg (1.65 lb)

Ambient conditions

Environmental limits for the drive are given below. The drive is to be used in a heated, indoor, controlled environment.

	Operation installed for stationary use	**Storage** in the protective package	**Transportation** in the protective package
Installation site altitude	0 to 4000 m (13123 ft) above sea level [above 1000 m (3281 ft), see *Derating* (page 121)] Drives with option +Q967: 0 to 2000 m (6562 ft)	-	-
Air temperature	-15 to +50 °C (5 to 122 °F). No frost allowed. See *Derating* (page 121).	-40 to +70 °C (-40 to +158 °F)	-40 to +70 °C (-40 to +158 °F)
Relative humidity	5 to 95%	Max. 95%	Max. 95%
	No condensation allowed. Maximum allowed relative humidity is 60% in the presence of corrosive gases.		
Contamination levels (IEC 60721-3-3, IEC 60721-3-2, IEC 60721-3-1)	No conductive dust allowed.		
	Boards with coating: Chemical gases: Class 3C2 Solid particles: Class 3S2	**Boards with coating:** Chemical gases: Class 1C2 Solid particles: Class 1S3	**Boards with coating:** Chemical gases: Class 2C2 Solid particles: Class 2S2
Atmospheric pressure	70 to 106 kPa 0.7 to 1.05 atmospheres	70 to 106 kPa 0.7 to 1.05 atmospheres	60 to 106 kPa 0.6 to 1.05 atmospheres
Vibration (IEC 60068-2)	Max. 1 mm (0.04 in.) (5 to 13.2 Hz), max. 7 m/s^2 (23 ft/s^2) (13.2 to 100 Hz) sinusoidal	Max. 1 mm (0.04 in.) (5 to 13.2 Hz), max. 7 m/s^2 (23 ft/s^2) (13.2 to 100 Hz) sinusoidal	Max. 3.5 mm (0.14 in.) (2 to 9 Hz), max. 15 m/s^2 (49 ft/s^2) (9 to 200 Hz) sinusoidal
Shock (IEC 60068-2-27)	Not allowed	Max. 100 m/s^2 (330 ft./s^2), 11 ms	Max. 100 m/s^2 (330 ft./s^2), 11 ms
Free fall	Not allowed	250 mm (10 in.) for weight under 100 kg (220 lb) 100 mm (4 in.) for weight over 100 kg (220 lb)	250 mm (10 in.) for weight under 100 kg (220 lb) 100 mm (4 in.) for weight over 100 kg (220 lb)

Materials

Drive enclosure

- PC/ABS 2.5 mm, color NCS 1502-Y (RAL 9002/PMS 420 C)
- hot-dip zinc coated steel sheet 1.5 to 2 mm, thickness of coating 100 micrometers
- extruded aluminum AlSi

Package

Cardboard, plywood, PP bands (straps), PE plastic

Disposal

The drive contains raw materials that should be recycled to preserve energy and natural resources. The package materials are environmentally compatible and recyclable. All metal parts can be recycled. The plastic parts can either be recycled or burned under controlled circumstances, according to local regulations. Most recyclable parts are marked with recycling marks.

If recycling is not feasible, all parts excluding electrolytic capacitors and printed circuit boards can be landfilled. The DC capacitors (C1-1 to C1-x) contain electrolyte and the printed circuit boards contain lead, both of which are classified as hazardous waste within the EU. They must be removed and handled according to local regulations.

For further information on environmental aspects and more detailed recycling instructions, please contact your local ABB distributor.

Applicable standards

The drive complies with these standards:

• EN 60204-1:2018	*Safety of machinery. Electrical equipment of machines. Part 1: General requirements.* Provisions for compliance: The final assembler of the machine is responsible for installing - an emergency-stop device - a supply disconnecting device.
• EN 60529:1991 + corrigendum May 1993 + A1:2000	*Degrees of protection provided by enclosures (IP code)*
• EN 60664-1:2007 +A1:2016	*Insulation coordination for equipment within low-voltage systems. Part 1: Principles, requirements and tests.*
• EN 61800-3:2004	*Adjustable speed electrical power drive systems. Part 3: EMC requirements and specific test methods*
• EN 61800-5-1:2007 +A1:2017	*Adjustable speed electrical power drive systems - Part 5-1: Safety requirements - Electrical, thermal and energy*
• UL 508C	*UL Standard for Safety, Power Conversion Equipment, third edition*
• NEMA 250-2003	*Enclosures for Electrical Equipment (1000 Volts Maximum)*
• CAN/CSA C22.2 No. 14-18	*Industrial control equipment*
• CSA C22.2 No. 274-17	*Adjustable speed drives*

CE marking

A CE mark is attached to the drive to verify that the unit follows the provisions of the European Low Voltage and EMC Directives. The CE marking also verifies that the drive, in regard to its safety functions (such as Safe torque off), conforms with the Machinery Directive as a safety component.

Compliance with the European Low Voltage Directive

The compliance with the European Low Voltage Directive has been verified according to standards EN 60204-1 and EN 61800-5-1.

Compliance with the European EMC Directive

The EMC Directive defines the requirements for immunity and emissions of electrical equipment used within the European Union. The EMC product standard (EN 61800-3:2004) covers requirements stated for drives. See *Compliance with EN 61800-3:2004* (page 133).

Compliance with the European Machinery Directive

The drive is an electronic product which is covered by the European Low Voltage Directive. However, the drive can be equipped with the Safe torque off function and other safety functions for machinery which, as safety components, are in the scope of the Machinery Directive. These functions of the drive comply with European harmonized standards such as EN 61800-5-2. The declaration of conformity for each function is in the appropriate function-specific manual.

Compliance with EN 61800-3:2004

Definitions

EMC stands for **E**lectro**m**agnetic **C**ompatibility. It is the ability of electrical/electronic equipment to operate without problems within an electromagnetic environment. Likewise, the equipment must not disturb or interfere with any other product or system within its locality.

First environment includes establishments connected to a low-voltage network which supplies buildings used for domestic purposes.

Second environment includes establishments connected to a network not supplying domestic premises.

Drive of category C2: drive of rated voltage less than 1000 V and intended to be installed and commissioned only by a professional when used in the first environment.
Note: A professional is a person or organization having necessary skills in installing and/or commissioning power drive systems, including their EMC aspects.

Drive of category C3: drive of rated voltage less than 1000 V and intended for use in the second environment and not intended for use in the first environment.

Drive of category C4: drive of rated voltage equal to or above 1000 V, or rated current equal to or above 400 A, or intended for use in complex systems in the second environment.

First environment (drive of category C2)

The drive complies with the standard with the following provisions:

1. The drive is equipped with EMC filter +E202.
2. The motor and control cables are selected as specified in the *Hardware Manual*.
3. The drive is installed according to the instructions given in the *Hardware Manual*.
4. The maximum cable length is 100 m.

WARNING! The drive may cause radio interference if used in a residential or domestic environment. The user is required to take measures to prevent interference, in addition to the requirements for CE compliance listed above, if it is necessary.

WARNING! Do not install a drive with EMC filter +E202 on IT (unearthed) systems. The supply network becomes connected to earth potential through the EMC filter capacitors which may cause danger or damage the unit.

Second environment (drive of category C3)

The drive complies with the standard with the following provisions:

1. The drive is equipped with EMC filter +E200. See page 70.
2. The motor and control cables are selected as specified in the *Hardware Manual*.
3. The drive is installed according to the instructions given in the *Hardware Manual*.
4. The maximum cable length is 100 m.

WARNING! A drive of category C3 is not intended to be used on a low-voltage public network which supplies domestic premises. Radio frequency interference is expected if the drive is used on such a network.

Second environment (drive of category C4)

If the provisions under *Second environment (drive of category C3)* (page 134) cannot be met, for example, the drive cannot be equipped with EMC filter +E200 when installed to an IT (unearthed) network, the requirements of the EMC Directive can be met as follows:

1. It is ensured that no excessive emission is propagated to neighboring low-voltage networks. In some cases, the inherent suppression in transformers and cables is sufficient. If in doubt, a supply transformer with static screening between the primary and secondary windings can be used.

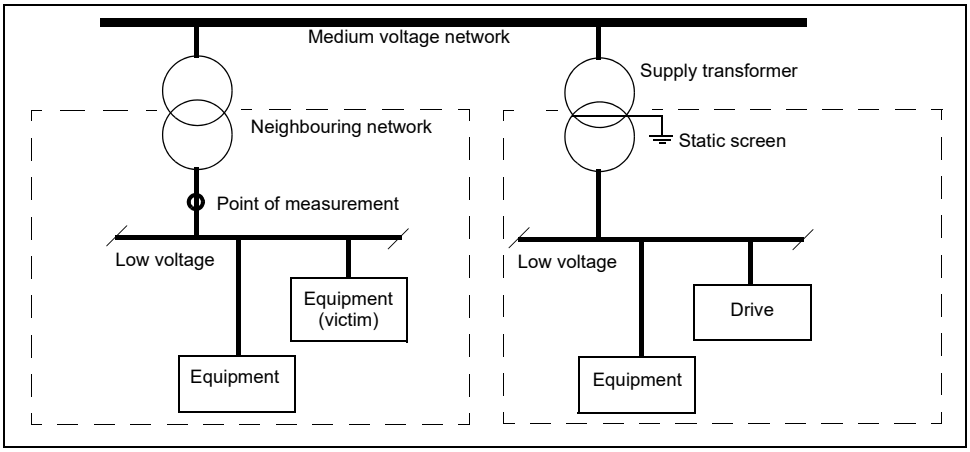

2. An EMC plan for preventing disturbances is drawn up for the installation. A template is available from the local ABB representative.
3. The motor and control cables are selected as specified in the *Hardware Manual*.
4. The drive is installed according to the instructions given in the *Hardware Manual*.

WARNING! A drive of category C4 is not intended to be used on a low-voltage public network which supplies domestic premises. Radio frequency interference is expected if the drive is used on such a network.

“C-tick” marking

A “C-tick” mark is attached to each drive in order to verify compliance with the EMC product standard (EN 61800-3:2004), required under the Trans-Tasman Electromagnetic Compatibility Scheme for levels 1, 2 and 3 in Australia and New Zealand. See *Compliance with EN 61800-3:2004* (page 133).

UL/CSA markings

The ACS800-U11 and ACS800-11 drives of UL type 1 are cULus listed and cCSAus certified.

UL checklist

- The drive is to be used in a heated, indoor controlled environment. The drive must be installed in clean air according to enclosure classification. Cooling air must be clean, free from corrosive materials and electrically conductive dust. See *Ambient conditions* (page 130) for the specific limits.
- The maximum ambient air temperature is 40 °C (104 °F) at rated current. The current is derated for 40 to 50 °C (104 to 122 °F).
- The drive is suitable for use on a circuit capable of delivering not more than 65 kA rms symmetrical amperes at the drive nominal voltage (600 V maximum for 690 V units) when protected by T class fuses.
- The cables located within the motor circuit must be rated for at least 75 °C (167 °F) in UL-compliant installations.
- The input cable must be protected with fuses. Circuit breakers must not be used without fuses in the USA. Suitable IEC (class aR) fuses and UL (class T) fuses are listed in the hardware manual.
- For installation in the United States, branch circuit protection must be provided in accordance with the National Electrical Code (NEC) and any applicable local codes. To fulfill this requirement, use the UL classified fuses.
- For installation in Canada, branch circuit protection must be provided in accordance with the Canadian Electrical Code and any applicable provincial codes. To fulfill this requirement, use the UL classified fuses.
- The drive provides overload protection in accordance with the National Electrical Code (NEC). See *ACS800 Firmware Manual* for setting. Default setting is off, must be activated at start-up.

Disclaimer

The manufacturer shall have no obligation with respect to any product which (i) has been improperly repaired or altered; (ii) has been subjected to misuse, negligence or accident; (iii) has been used in a manner contrary to the manufacturer's instructions; or (iv) has failed as a result of ordinary wear and tear.

Cybersecurity disclaimer

This product can be connected to and communicate information and data via a network interface. The HTTP protocol, which is used between the commissioning tool (Drive Composer) and the product, is an unsecured protocol. For independent

and continuous operation of a product, such connection via a network to the commissioning tool is not necessary. However, it is the Customer's sole responsibility to provide and continuously ensure a secure connection between the product and the Customer network or any other network (as the case may be).

Customer shall establish and maintain any appropriate measures (such as but not limited to the installation of firewalls, prevention of physical access, application of authentication measures, encryption of data, installation of anti-virus programs, and so on) to protect the product, the network, its system and the interface against any kind of security breaches, unauthorized access, interference, intrusion, leakage and/or theft of data or information. Notwithstanding any other provision to the contrary and regardless of whether the contract is terminated or not, ABB and its affiliates are under no circumstances liable for damages and/or losses related to such security breaches, any unauthorized access, interference, intrusion, leakage and/or theft of data or information.

16

Dimensional drawings

The dimensions are given in millimeters and [inches].

Frame size R5 (IP21, UL type 1)

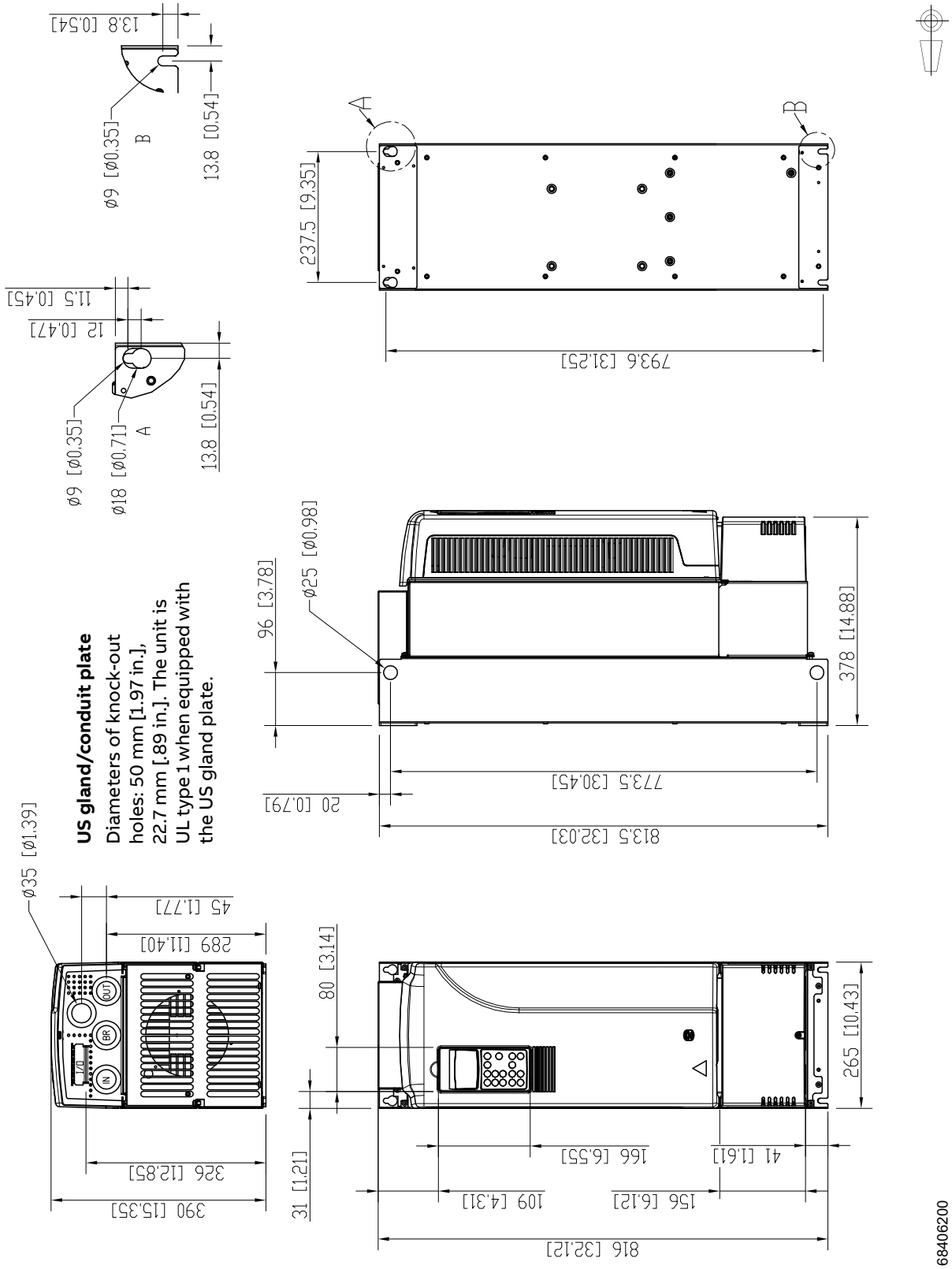

US gland/conduit plate
Diameters of knock-out holes: 50 mm [1.97 in.], 22.7 mm [.89 in.]. The unit is UL type 1 when equipped with the US gland plate.

Frame size R6 (IP21, UL type 1)

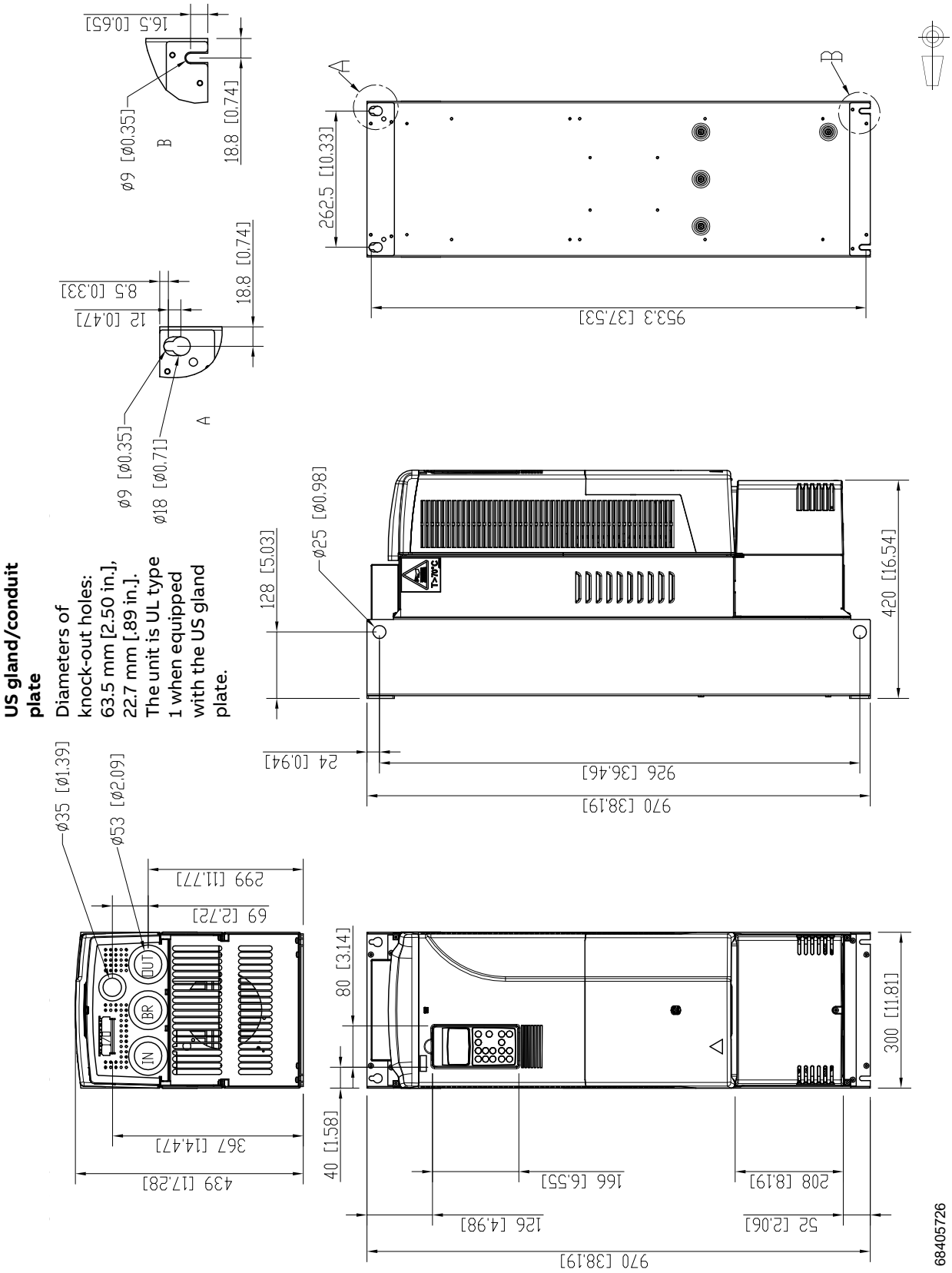

US gland/conduit plate

Diameters of knock-out holes: 63.5 mm [2.50 in.], 22.7 mm [.89 in.]. The unit is UL type 1 when equipped with the US gland plate.

Cabinet duct plates (optional), frame size R5

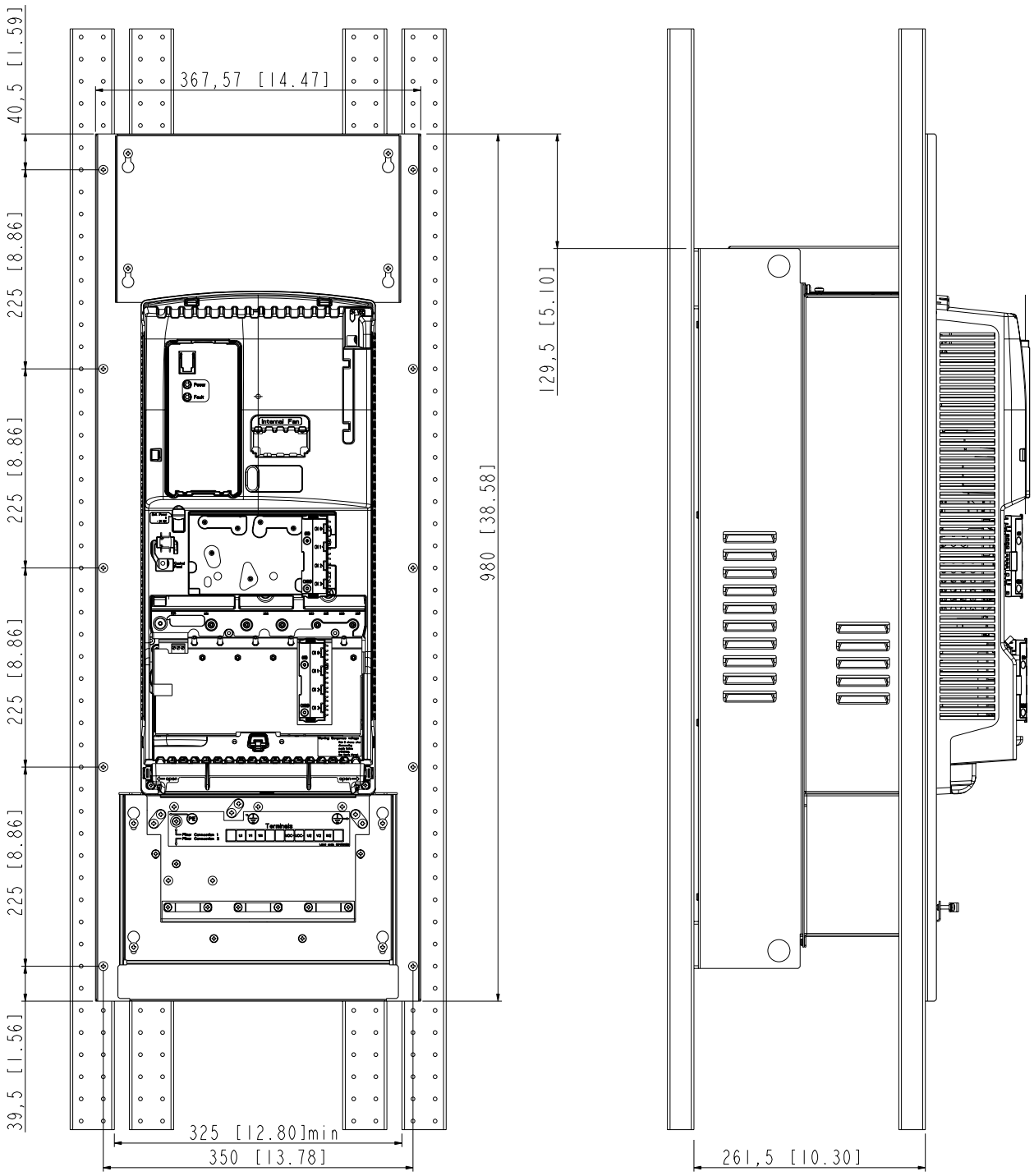

Cabinet duct plates (optional), frame size R6

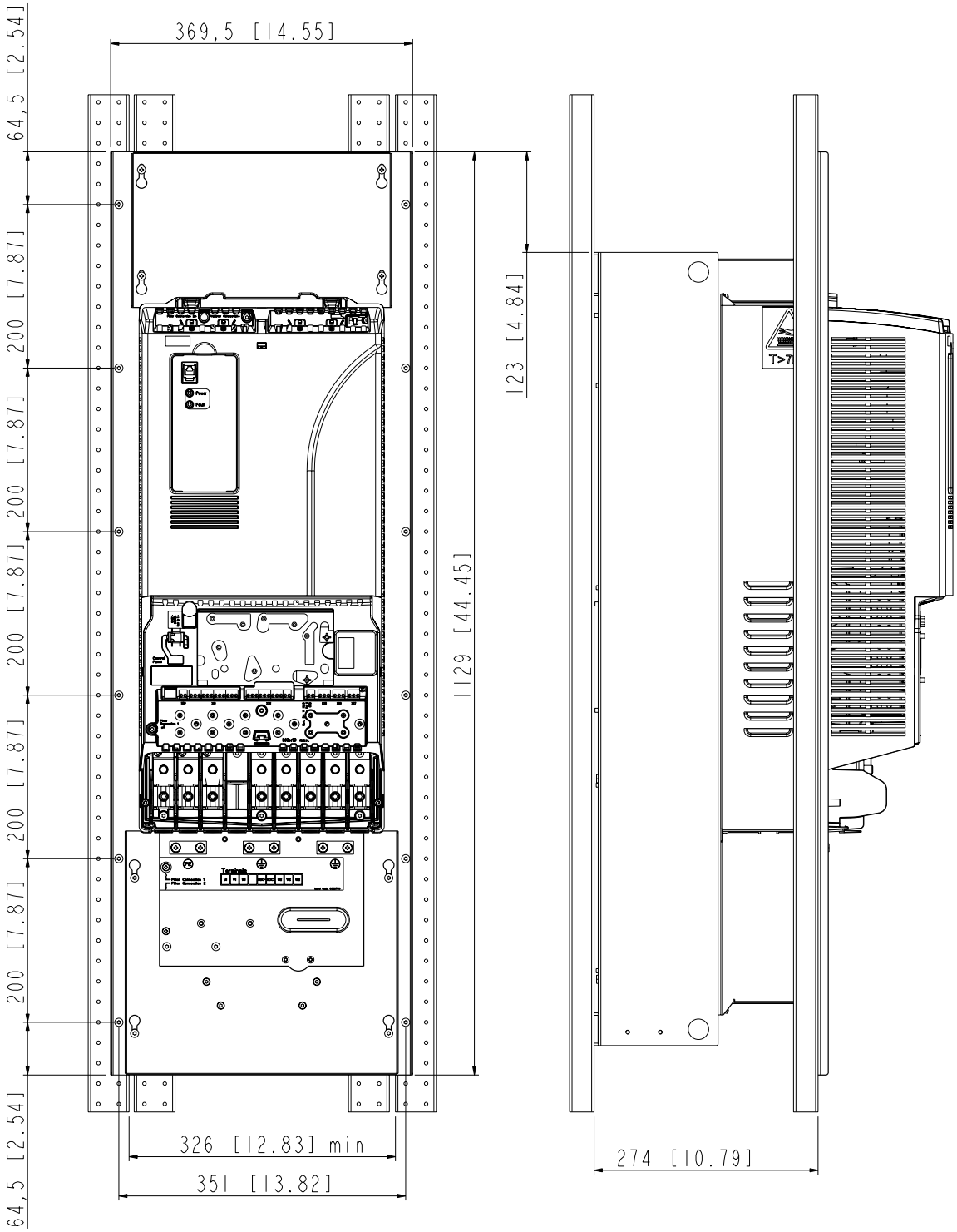

Package (frame size R5)

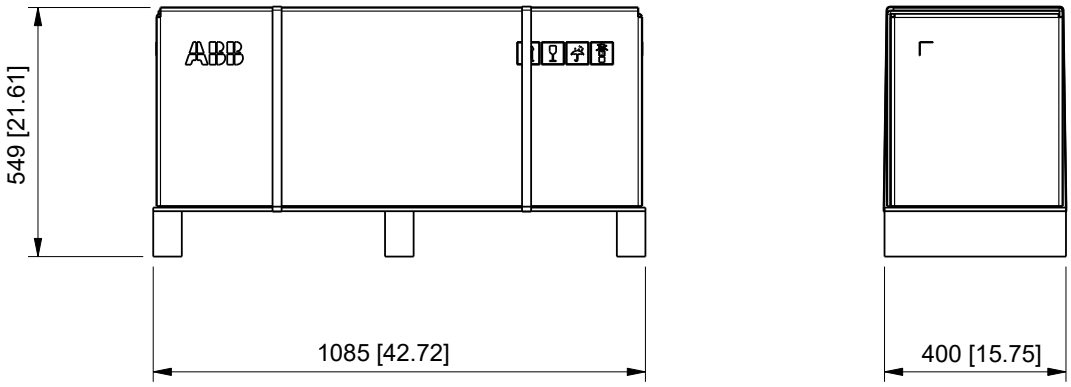

Package (frame size R6)

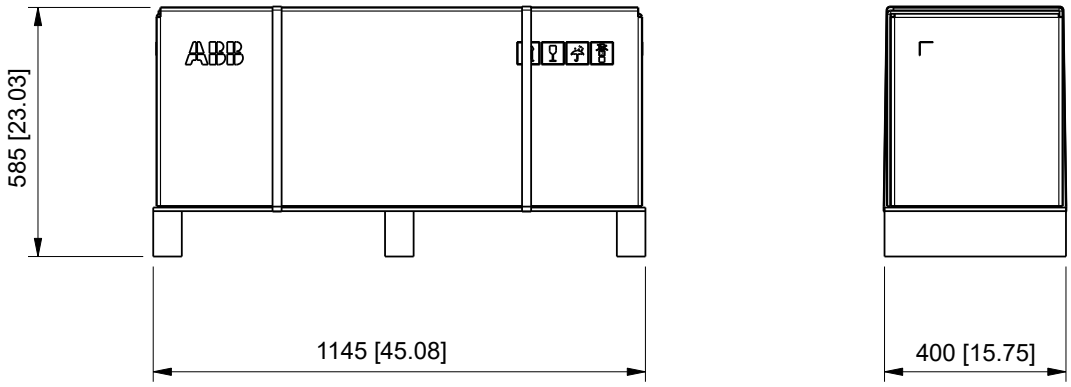

AGPS board with enclosure (optional)

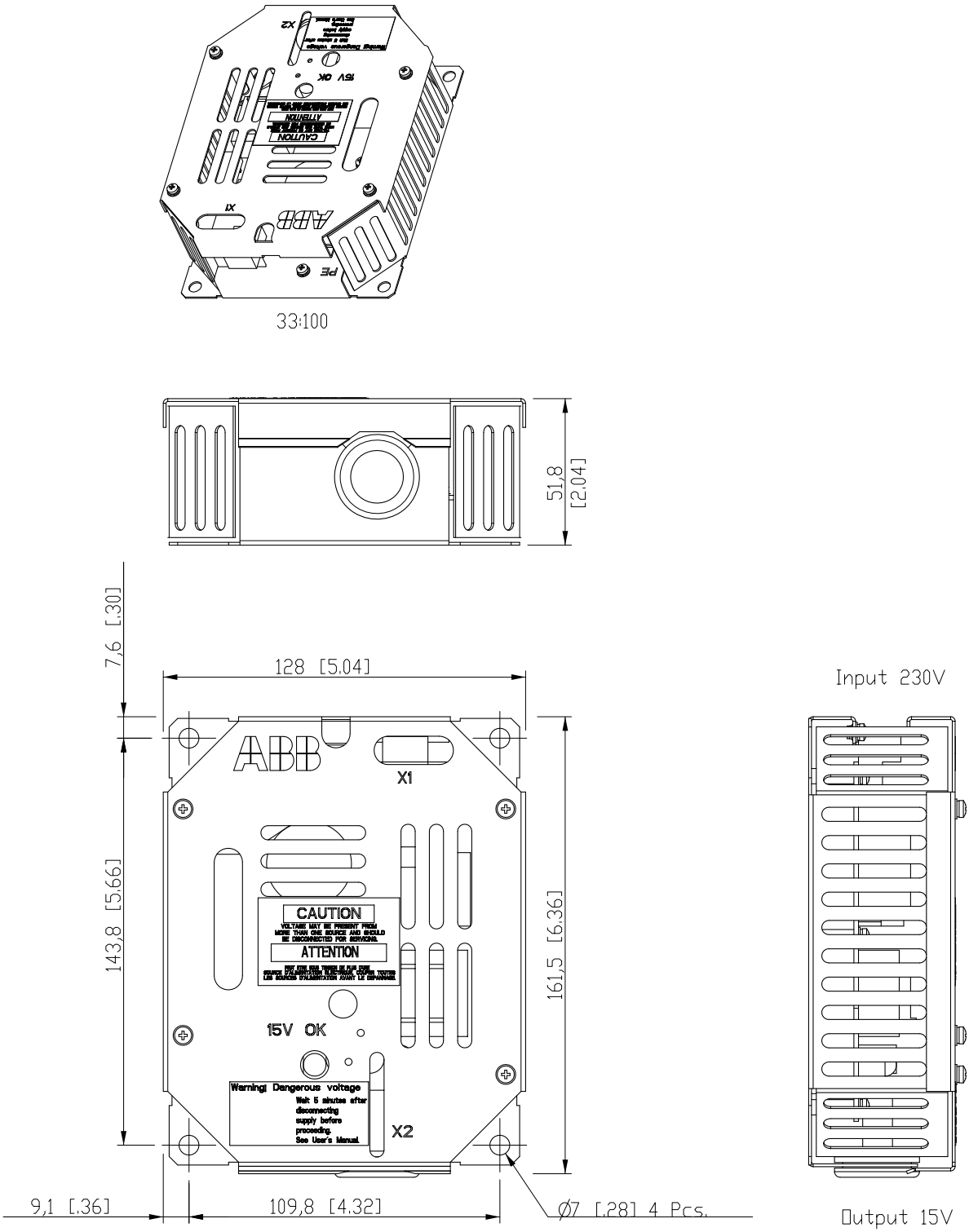

3AFE68293898

ASTO board with enclosure (optional)

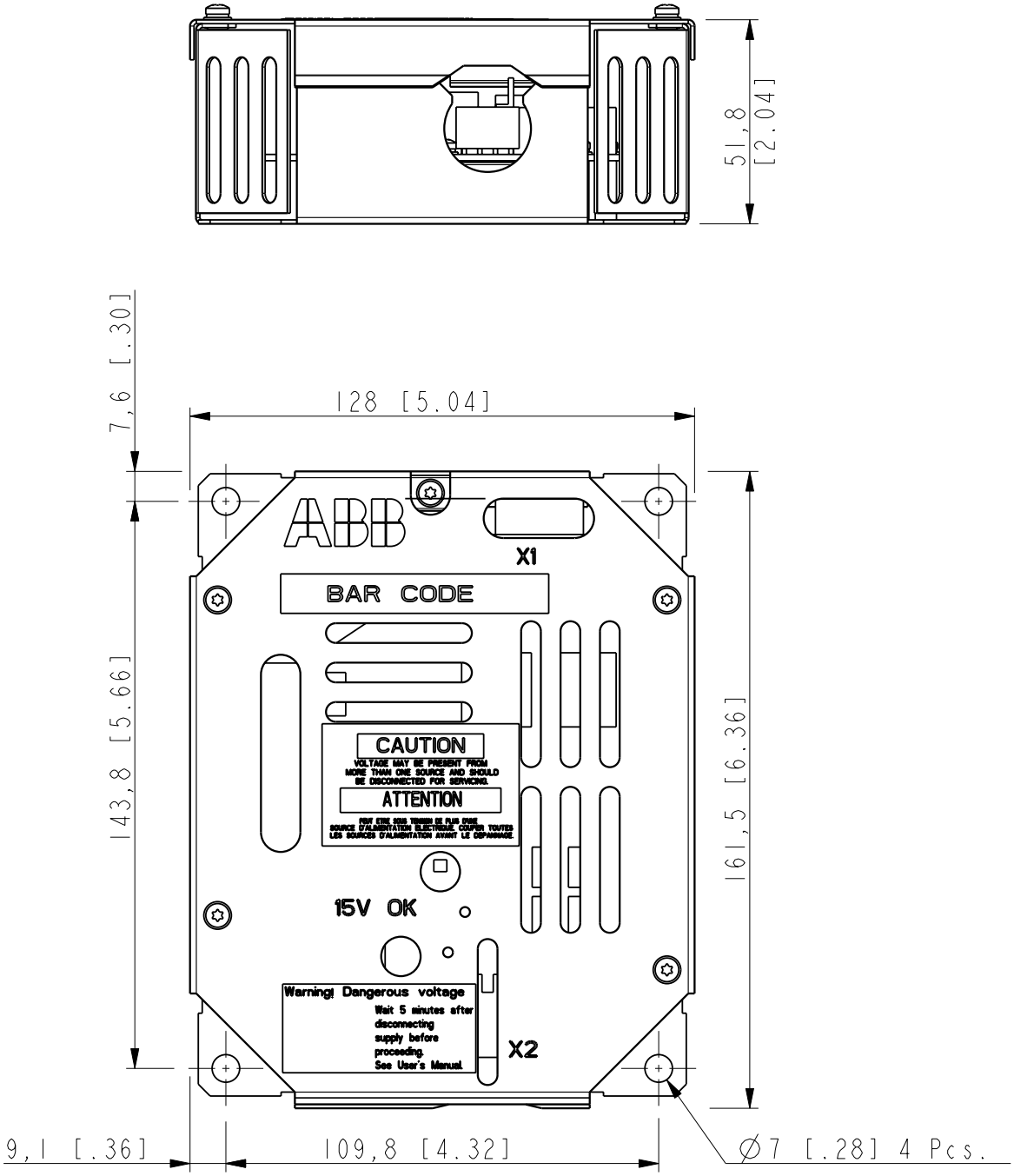

3AUA0000068698

17

External +24 V power supply for the RMIO boards via terminal X34

What this chapter contains

This chapter describes how to connect an external +24 V power supply for the RMIO boards of the motor-side and line-side converters via terminal X34. For current consumption of the RMIO board, see *Motor control and I/O board (RMIO)* (page 93).

For the motor-side converter RMIO board, external power is easier to supply via terminal X23, see *Motor control and I/O board (RMIO)* (page 93).

Parameter settings

In Standard Application Program, set parameter 16.09 CTRL BOARD SUPPLY to EXTERNAL 24V if the RMIO board is powered from an external supply.

Connecting +24 V external power supply

RMIO board of the motor-side converter

1. Break off the tab covering the +24 V DC power input connector with pliers.
2. Pull the connector outwards.
3. Disconnect the wires from the connector (keep the connector for later use).
4. Isolate the ends of the wires individually with insulating tape.
5. Cover the isolated ends of the wires with insulating tape.
6. Push the wires into the inside of the skeleton.
7. Connect the wires of the 24 V external power supply to the disconnected connector:
   if a two-way connector, + wire to terminal 1 and - wire to terminal 2
   if a three-way connector, + wire to terminal 2 and - wire to terminal 3.
8. Plug the connector in.

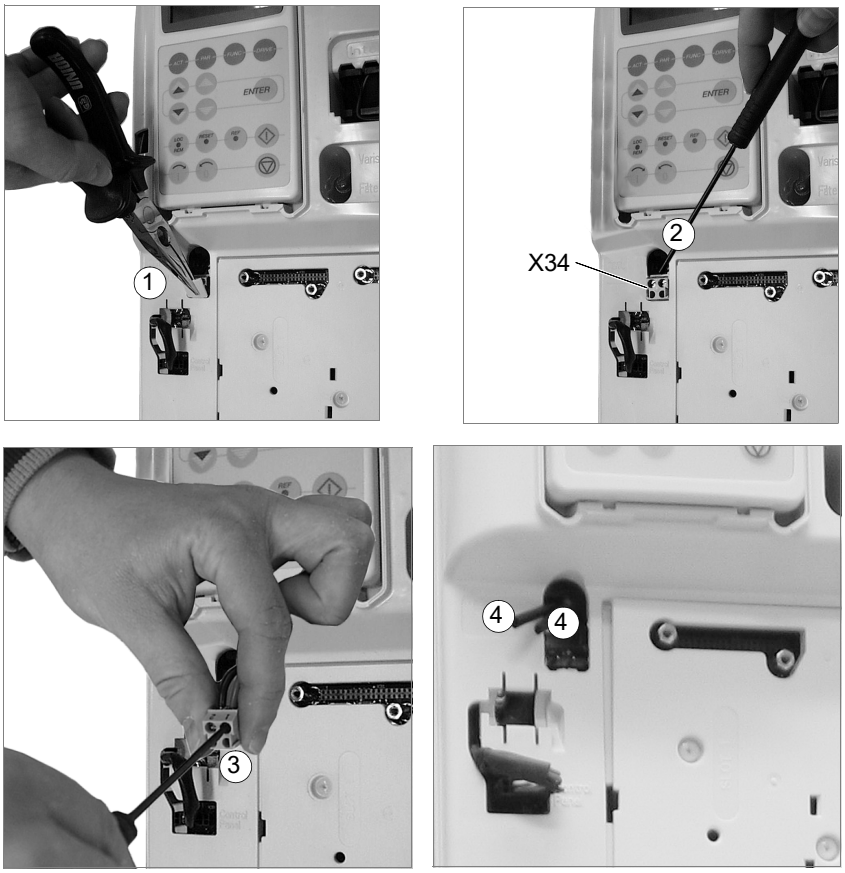

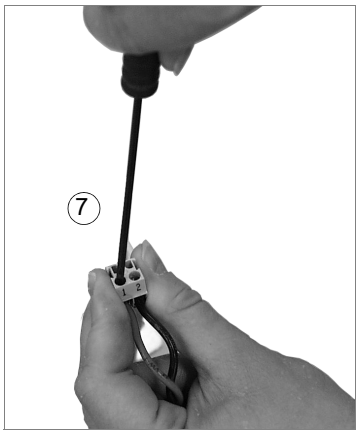

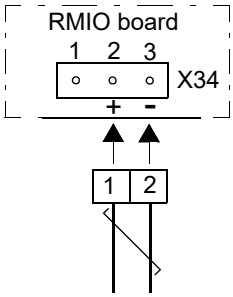

Connection of a two-way connector

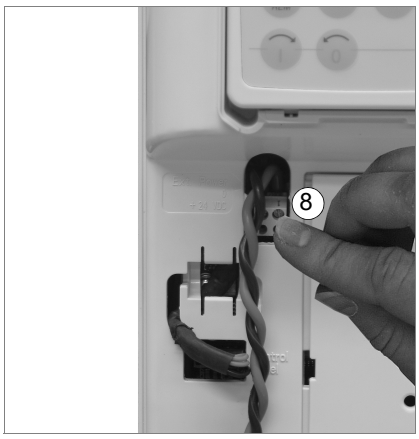

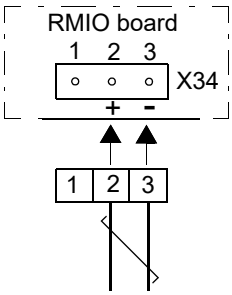

Connection of a three-way connector

RMIO board of the line-side converter

Frame size R5

The location of terminal X34 in the line-side converter is shown below. Connect the external 24 V supply to the board as described in steps 2 to 8 in *RMIO board of the motor-side converter* (page 146).

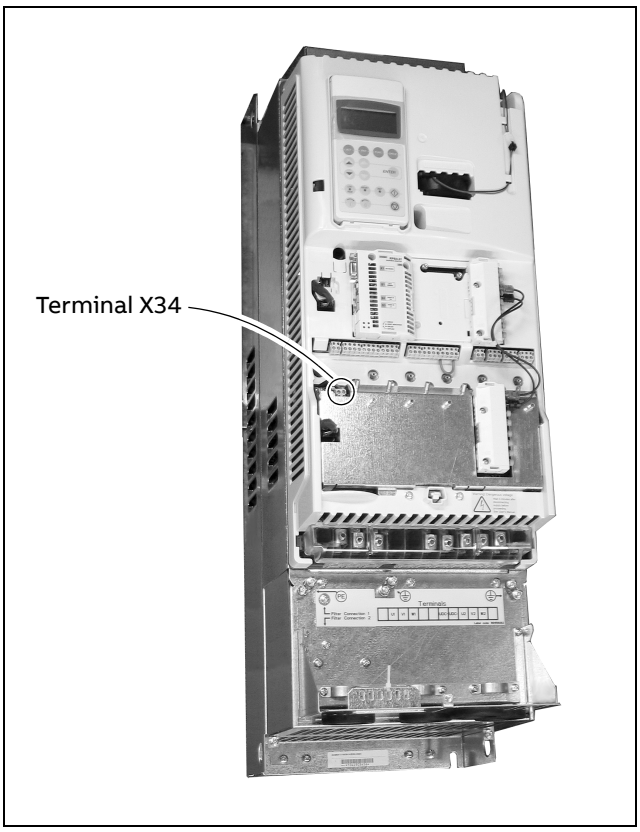

Frame size R6

1. Remove the top cover by releasing the retaining clip with a screw driver and lifting the cover upwards.
2. Disconnect the DDCS communication module by opening the screws and disconnecting the fiber-optic cables. Disconnect other optional modules if present.
3. Disconnect the control panel cable.
4. Disconnect the additional fan cable (detachable terminal) and release the strain relief.
5. Remove the I/O terminal blocks.
6. Undo the screws of the upper plastic cover.
7. Lift the cover carefully upwards by the lower sides.
8. Disconnect the control panel cable from the RMIO board.
9. Lift the upper plastic cover off.
10. Connect the external 24 V supply to the board as described in steps 2 to 5, 7 and 8 in *RMIO board of the motor-side converter* (page 146).
11. Reconnect all disconnected cables and attach the covers in reverse order.

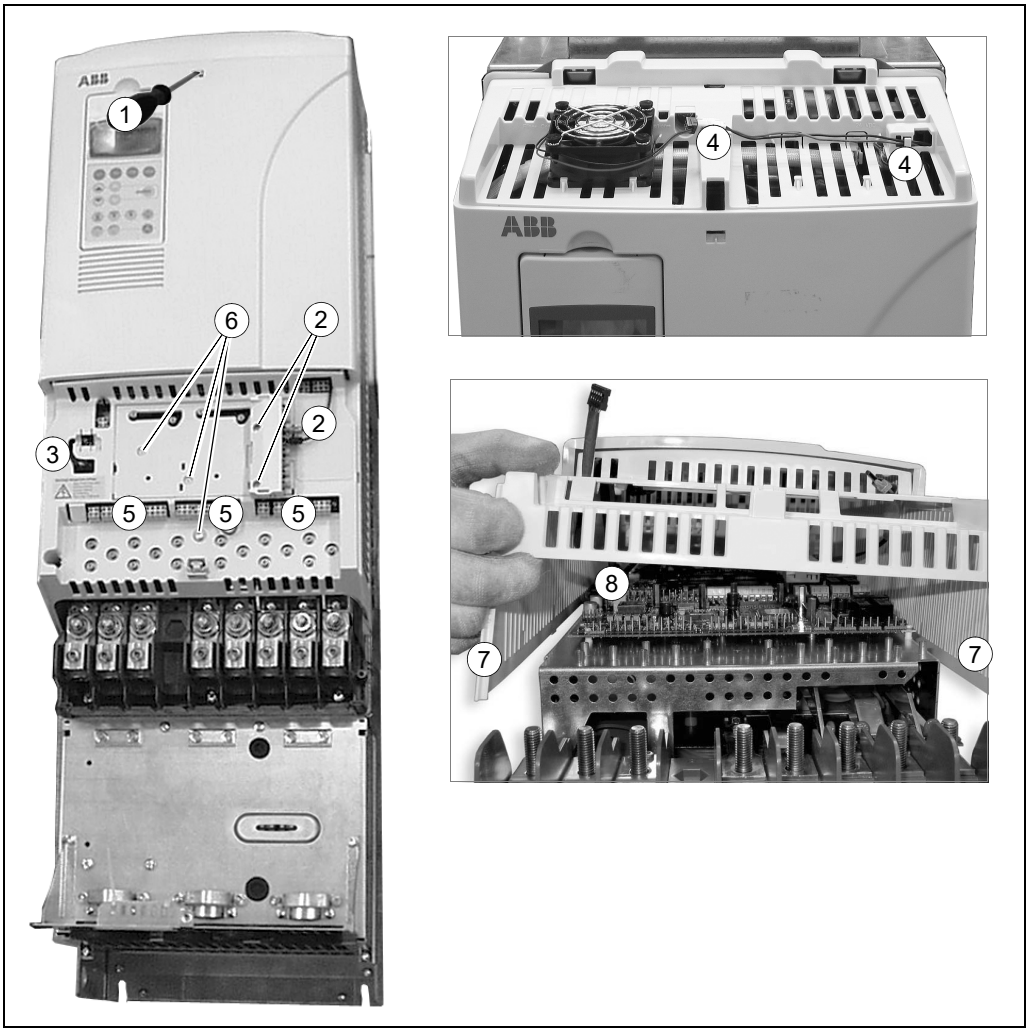

Further information

Product and service inquiries

Address any inquiries about the product to your local ABB representative, quoting the type designation and serial number of the unit in question. A listing of ABB sales, support and service contacts can be found by navigating to abb.com/searchchannels.

Product training

For information on ABB product training, navigate to new.abb.com/service/training.

Providing feedback on ABB Drives manuals

Your comments on our manuals are welcome. Navigate to new.abb.com/drives/manuals-feedback-form.

Document library on the Internet

You can find manuals and other product documents in PDF format on the Internet at abb.com/drives/documents.

abb.com/drives

3AFE68367883D

© Copyright 2023 ABB. All rights reserved.
Specifications subject to change without notice.

3AFE68367883 Rev D (EN) 2023-12-01